SPC

Spare Parts Catalogue

Tetra Pak A3/Flex

648575-0150

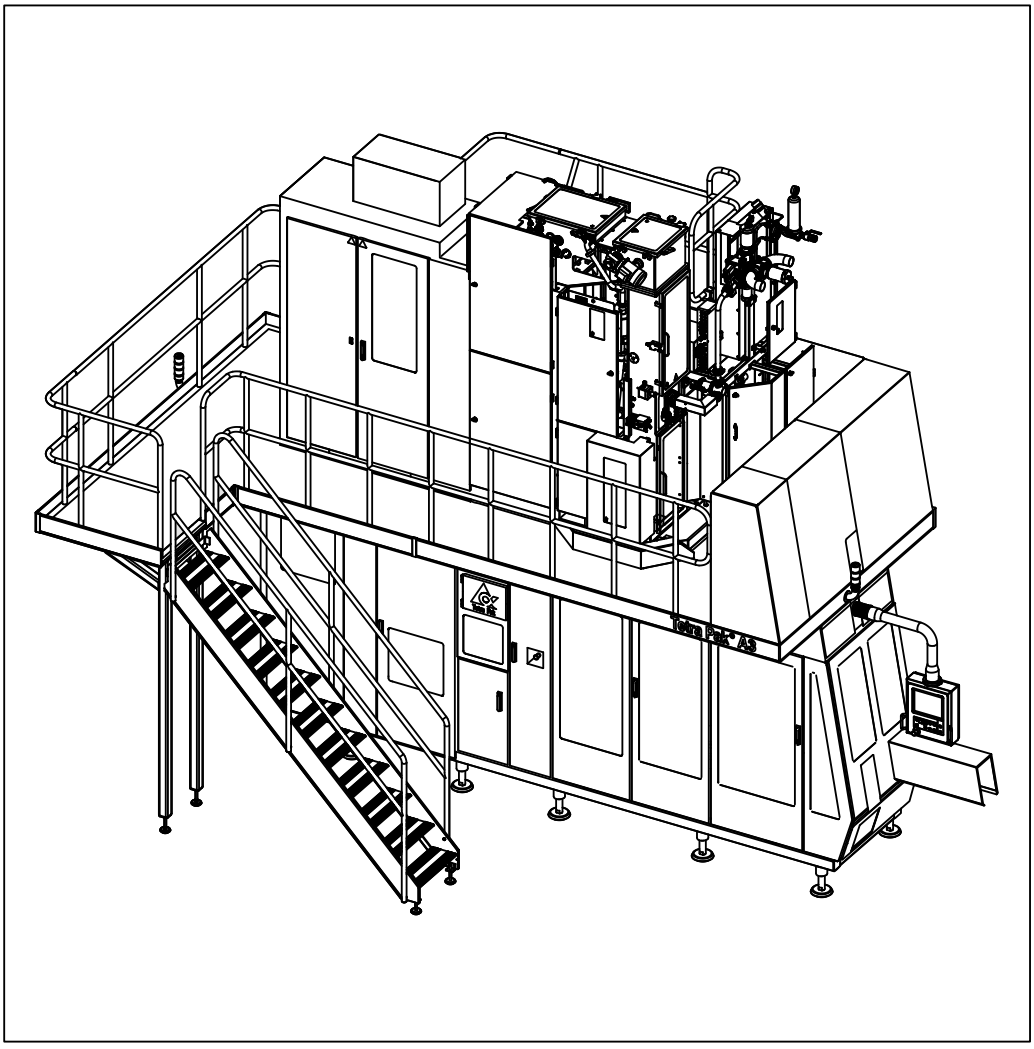

Tetra Pak

Doc. No: SPC-2851301-0117

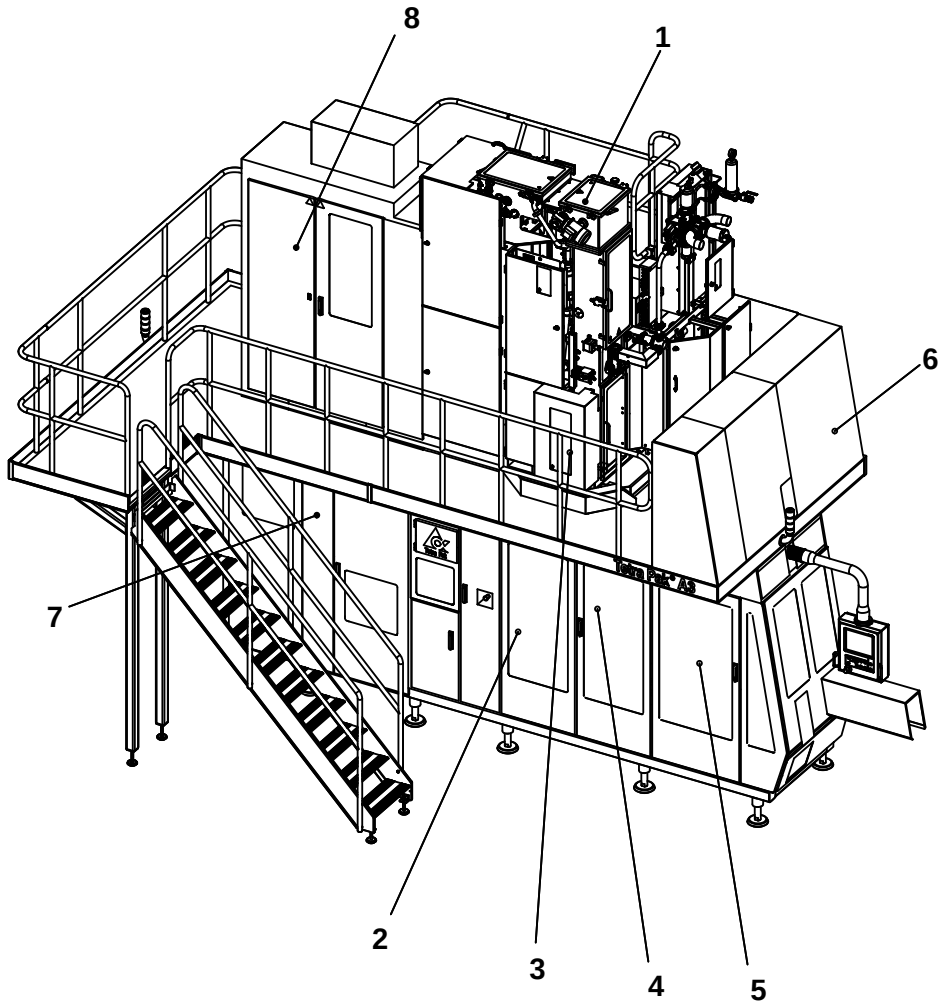

The position numbers in the illustration correspond with the chapter numbers listed on the next page.

Copyright © 2009 Tetra Pak Group

All rights reserved. No part of this document may be reproduced or copied in any form or by any means without written permission from Tetra Pak Packaging Solutions .

Tetra Pak and all Tetra Pak products are trademarks belonging to the Tetra Pak Group.

The content of this manual is in accordance with the design and construction of the machine or equipment at the time of publishing. Tetra Pak reserves the right to introduce design modifications without prior notice.

This document was produced by:

Tetra Pak Packaging Solutions
Via Delfini 1
411 00 Modena
ITALY

Additional copies can be ordered from Tetra Pak. When ordering additional copies, always provide the document number.

Doc. No. SPC-2851301-0117

Issue 2009-09

This document is valid from:

21211/00480

Series No/Machine No Sign.

SPC

Spare Parts Catalogue

Tetra Pak A3/Flex
648575-0150

BINDER 1
- i Introduction
- 1 Superstructure
- 2 Machine Body
- 3 Drive Unit

BINDER 2
- 4 Jaw System
- 5 Final Folder
- 6 Final Folder TGA
- 7 Service Unit

BINDER 3
- 8 Automatic Splicing Unit
- 9 Electrical Cabinet
- 10 Regular Accessories
- 11 Optional Accessories
- ii Part Number Index
- iii Ref. Des. Parts Index

Machine or equipment configurations that this catalogue is valid for are described on the next page.

Doc. No: SPC-2851301-0117

Issue 2009-09

Tetra Pak

Tetra Pak Packaging Solutions

Valid for:

Name	Drawing Specification and Development Step	Additional Information
Tetra Pak A3/Flex	648575-0150	-

Update Log for Doc. No. SPC-2851301-0117

This table shows all changes made to this catalogue, including installed rebuilding kits, added or removed pages.

Date	Installed Kit	Added Pages (Doc. No.)	Removed Pages	Signature

Date	Installed Kit	Added Pages (Doc. No.)	Removed Pages	Signature

i Introduction

en About the Introduction Chapter
This chapter contains basic information about this catalogue and related Tetra Pak equipment.

bg За уводната глава
Тази глава съдържа основна информация за този каталог и приложимото Tetra Pak оборудване.

cs O kapitole Úvod
Tato kapitola obsahuje základní informace o této příručce a souvisejícím zařízení Tetra Pak.

da Om indledningen
Kapitlet indeholder grundlæggende oplysninger om dette katalog og tilhørende Tetra Pak-udstyr.

de Über das Einleitungskapitel
Diese Kapitel enthält grundlegende Informationen über diesen Katalog und die zugehörige Tetra Pak-Ausrüstung

el Σχετικά με το Κεφάλαιο 'Εισαγωγή'
Αυτό το κεφάλαιο περιέχει βασικές πληροφορίες για τον παρόντα κατάλογο και τον σχετικό εξοπλισμό της Tetra Pak.

es Acerca del capítulo Introducción
Este capítulo contiene información básica sobre este catálogo y el equipo Tetra Pak relacionado.

et Sissejuhatava peatüki kohta
See peatükk sisaldab teavet käesoleva kataloogi ja sellega seonduva Tetra Paki seadme kohta.

fi Tietoja Johdanto-luvusta
Tässä luvussa on perustietoja tästä luettelosta ja Tetra Pak -laitteesta.

fr À propos du chapitre Introduction
Ce chapitre contient les informations de base à propos de ce catalogue et de l'équipement Tetra Pak concerné.

hu A Bevezetés fejezetről
Ez a fejezet alapvető információkat tartalmaz a katalógusról és a hozzá tartozó Tetra Pak berendezésről.

is Um inngangskaflann
Þessi kafli inniheldur grundvallarupplýsingar um þennan vörulista og tengdan Tetra Pak búnað.

it Informazioni sul capitolo Introduzione
Questo capitolo contiene informazioni generali sul presente catalogo e sulla relativa macchina Tetra Pak.

lt Apie įvadinį skyrių
Šiame skyriuje pateikta pagrindinė informacija apie šį katalogą ir su juo susijusią "Tetra Pak" įrangą.

lv Par Ievada nodaļu
Šī nodaļa ietver galveno informāciju par šo katalogu un saistītajām Tetra Pak iekārtām.

nl Over de inleiding
Dit hoofdstuk bevat basisinformatie omtrent deze catalogus en aanverwante Tetra Pak-installatie.

no Om kapitlet Introduksjon
Dette kapitlet inneholder grunnleggende informasjon om denne katalogen og relatert Tetra Pak-utstyr.

pl Informacje na temat rozdziału wprowadzającego
Rozdział wprowadzający zawiera podstawowe informacje dotyczące niniejszego katalogu i związanej z nim maszyny Tetra Pak.

pt Acerca do Capítulo de Introdução
Este capítulo contém informações básicas sobre este catálogo e os equipamentos relacionados da Tetra Pak.

ro Despre capitolul introductiv
Acest capitol conține informații de bază despre acest catalog și despre echipamentul Tetra Pak corelat.

sk O kapitole Úvod
Táto kapitola obsahuje základné informácie o tomto návode a informácie súvisiace so zariadením Tetra Pak.

sl O uvodnem poglavju
To poglavje vsebuje osnovne informacije o tem katalogu in opremi Tetra Pak.

sv Om inledningskapitlet
Det här kapitlet innehåller grundläggande information om katalogen och Tetra Pak-utrustningen.

Introduction

Illustrations . . . . . i - 5
English Text . . . . . i - 7

Увод

Илюстрации . . . . . i - 5
Текст на български език . . . . . i -11

Úvod

Obrázky . . . . . i -5
Český text . . . . . i - 15

Indledning

Illustrationer . . . . . i - 5
Dansk tekst . . . . . i - 19

Einleitung

Abbildungen . . . . . i - 5
Deutscher Text . . . . . i - 23

Εισαγωγή

Εικόνες . . . . . i - 5
Ελληνικό Κείμενο . . . . . i - 27

Introducción

Ilustraciones . . . . . i - 5
Texto en español . . . . . i - 31

Sissejuhatus

Joonised . . . . . i - 5
Eestikeelne tekst . . . . . i - 35

Johdanto

Kuvat . . . . . i - 5
Suomenkielinen teksti . . . . . i - 39

Introduction

Illustrations . . . . . i - 5
Texte français . . . . . i - 43

Bevezetés

Ábrák . . . . . i - 5
Magyar szöveg . . . . . i - 47

Inngangur

Skýringarmyndir . . . . . i - 5
Íslenskur texti . . . . . i - 51

Introduzione

Figure . . . . . i - 5
Testo in italiano . . . . . i - 55

Įvadas

Paveikslėliai . . . . . i - 5
Lietuviškas tekstas . . . . . i - 59

Ievads

Ilustrācijas . . . . . i - 5
Teksts latviešu valodā . . . . . i - 63

Inleiding

Afbeeldingen . . . . . i - 5
Nederlands tekst . . . . . i - 67

Introduksjon

Illustrasjoner . . . . . i - 5
Norsk tekst . . . . . i - 71

Wprowadzenie

Rysunki . . . . . i - 5
Tekst polski . . . . . i - 75

Introdução

Ilustrações . . . . . i - 5
Texto em português . . . . . i - 79

Introducere

Ilustrații . . . . . i - 5
Text în limba română . . . . . i - 83

Úvod

Ilustrácie . . . . . i – 5
Slovenský text . . . . . i - 87

Uvod

Slike . . . . . i - 5
Slovensko besedilo . . . . . i - 91

Inledning

Bilder . . . . . i - 5
Svensk text . . . . . i - 95

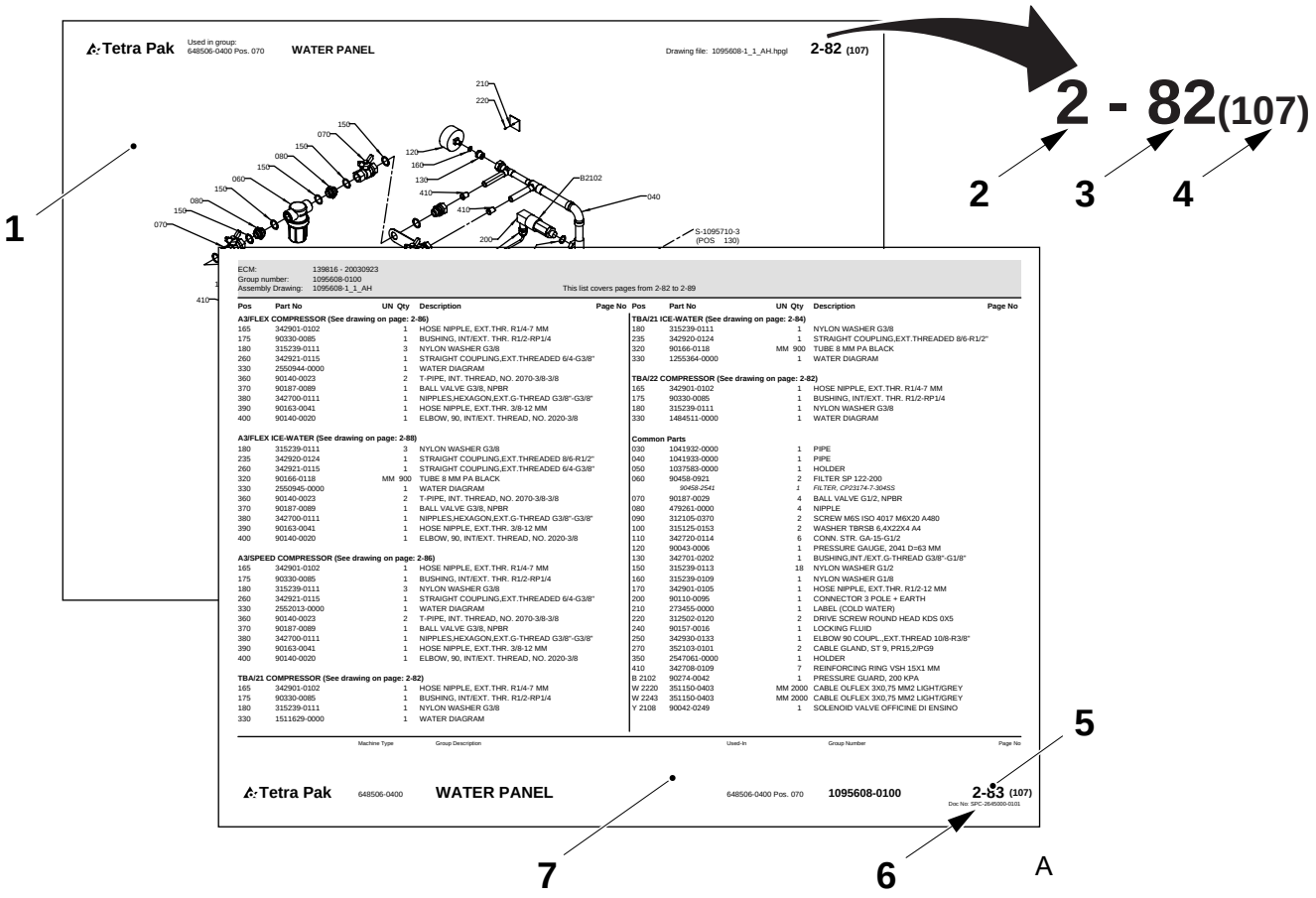
Tetra Pak
Used in group: 648506-0400 Pos. 070
WATER PANEL
Drawing file: 1095608-1_1_AH.hpgl
2-82 (107)
2 - 82(107)
1
2
3
4
5
6
7
A
ECM: 139816 - 20030923
Group number: 1095608-0100
Assembly Drawing: 1095608-1_1_AH
This list covers pages from 2-82 to 2-89
Tetra Pak
648506-0400
WATER PANEL
648506-0400 Pos. 070
1095608-0100
2-83 (107)

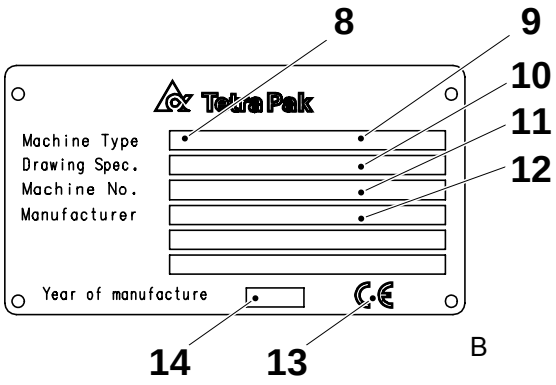
8
9
10
11
12
Tetra Pak
Machine Type
Drawing Spec.
Machine No.
Manufacturer
Year of manufacture
14
13
B

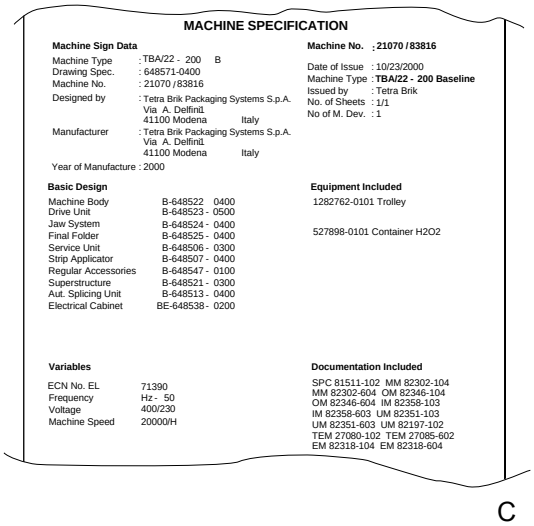
MACHINE SPECIFICATION
Machine Sign Data
Machine Type : TBA/22 - 200 B
Drawing Spec. : 648571-0400
Machine No. : 21070 / 83816
Designed by : Tetra Brik Packaging Systems S.p.A. Via A. Delfini1 41100 Modena Italy
Manufacturer : Tetra Brik Packaging Systems S.p.A. Via A. Delfini1 41100 Modena Italy
Year of Manufacture : 2000
Machine No. ; 21070 / 83816
Date of Issue : 10/23/2000
Machine Type : TBA/22 - 200 Baseline
Issued by : Tetra Brik
No. of Sheets : 1/1
No of M. Dev. : 1
Basic Design
Machine Body B-648522 0400
Drive Unit B-648523 - 0500
Jaw System B-648524 - 0400
Final Folder B-648525 - 0400
Service Unit B-648506 - 0300
Strip Applicator B-648507 - 0400
Regular Accessories B-648547 - 0100
Superstructure B-648521 - 0300
Aut. Splicing Unit B-648513 - 0400
Electrical Cabinet BE-648538 - 0200
Equipment Included
1282762-0101 Trolley
527898-0101 Container H2O2
Variables
ECN No. EL 71390
Frequency Hz - 50
Voltage 400/230
Machine Speed 20000/H
Documentation Included
SPC 81511-102 MM 82302-104
MM 82302-604 OM 82346-104
OM 82346-604 IM 82358-103
IM 82358-603 UM 82351-103
UM 82351-603 UM 82197-102
TEM 27080-102 TEM 27085-602
EM 82318-104 EM 82318-604
C

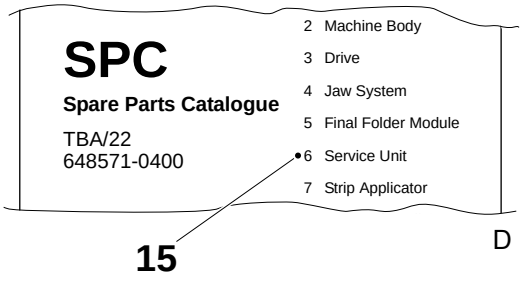
SPC
Spare Parts Catalogue
TBA/22
648571-0400
2 Machine Body
3 Drive
4 Jaw System
5 Final Folder Module
6 Service Unit
7 Strip Applicator
15
D

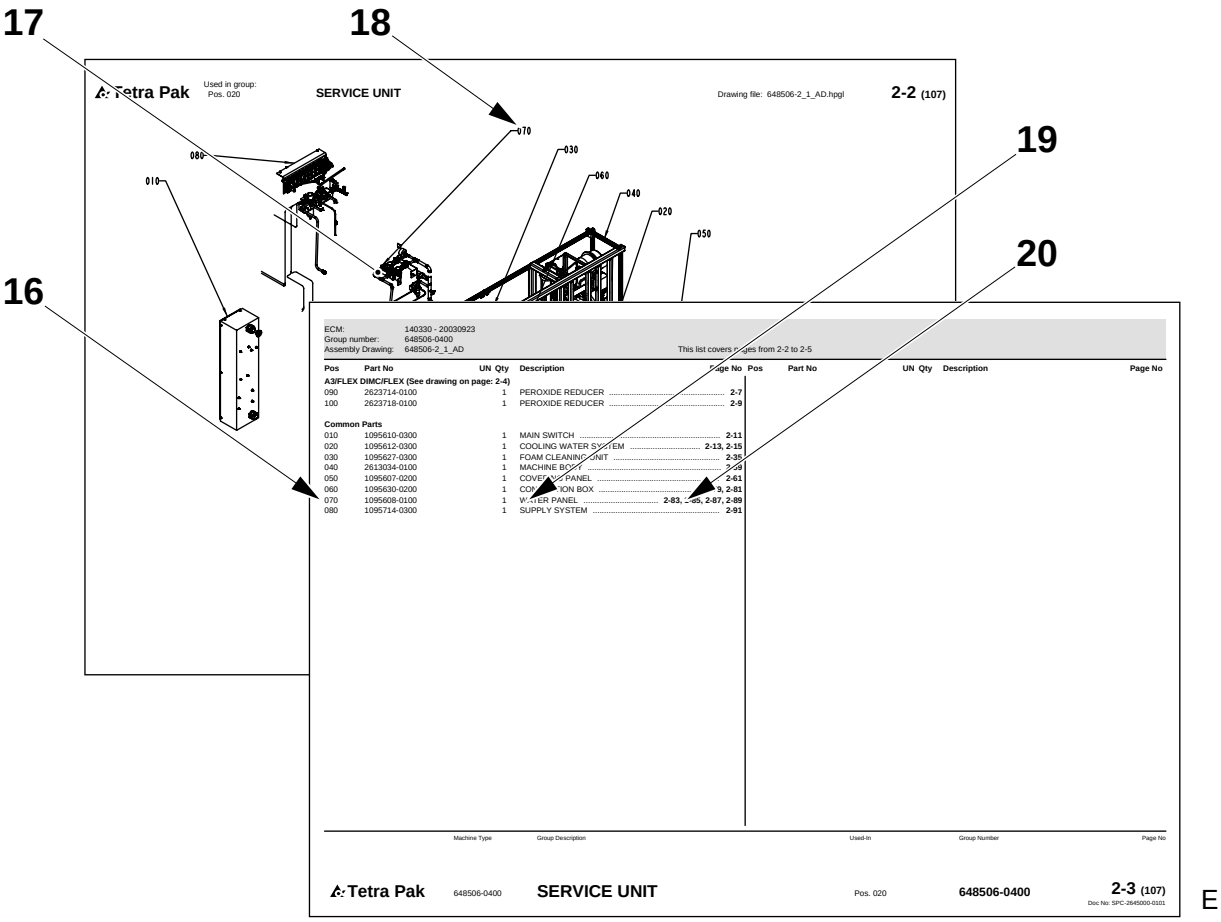
17
18
19
20
16
Tetra Pak
Used in group:
Pos. 020
SERVICE UNIT
Drawing file: 648506-2_1_AD.hpgl
2-2 (107)
070
030
080
060
010
040
020
050
ECM: 140330 - 20030923
Group number: 648506-0400
Assembly Drawing: 648506-2_1_AD
This list covers pages from 2-2 to 2-5
Pos Part No UN Qty Description Page No
A3/FLEX DIMC/FLEX (See drawing on page: 2-4)
090 2623714-0100 1 PEROXIDE REDUCER 2-7
100 2623718-0100 1 PEROXIDE REDUCER 2-9
Common Parts
010 1095610-0300 1 MAIN SWITCH 2-11
020 1095612-0300 1 COOLING WATER SYSTEM 2-13, 2-15
030 1095627-0300 1 FOAM CLEANING UNIT 2-35
040 2613034-0100 1 MACHINE BODY 2-39
050 1095607-0200 1 COVERING PANEL 2-61
060 1095630-0200 1 CONNECTION BOX 2-79, 2-81
070 1095608-0100 1 WATER PANEL 2-83, 2-85, 2-87, 2-89
080 1095714-0300 1 SUPPLY SYSTEM 2-91
Pos Part No UN Qty Description Page No
Machine Type Group Description Used-In Group Number Page No
Tetra Pak 648506-0400 SERVICE UNIT Pos. 020 648506-0400 2-3 (107)
Doc No: SPC-2645000-0101
E

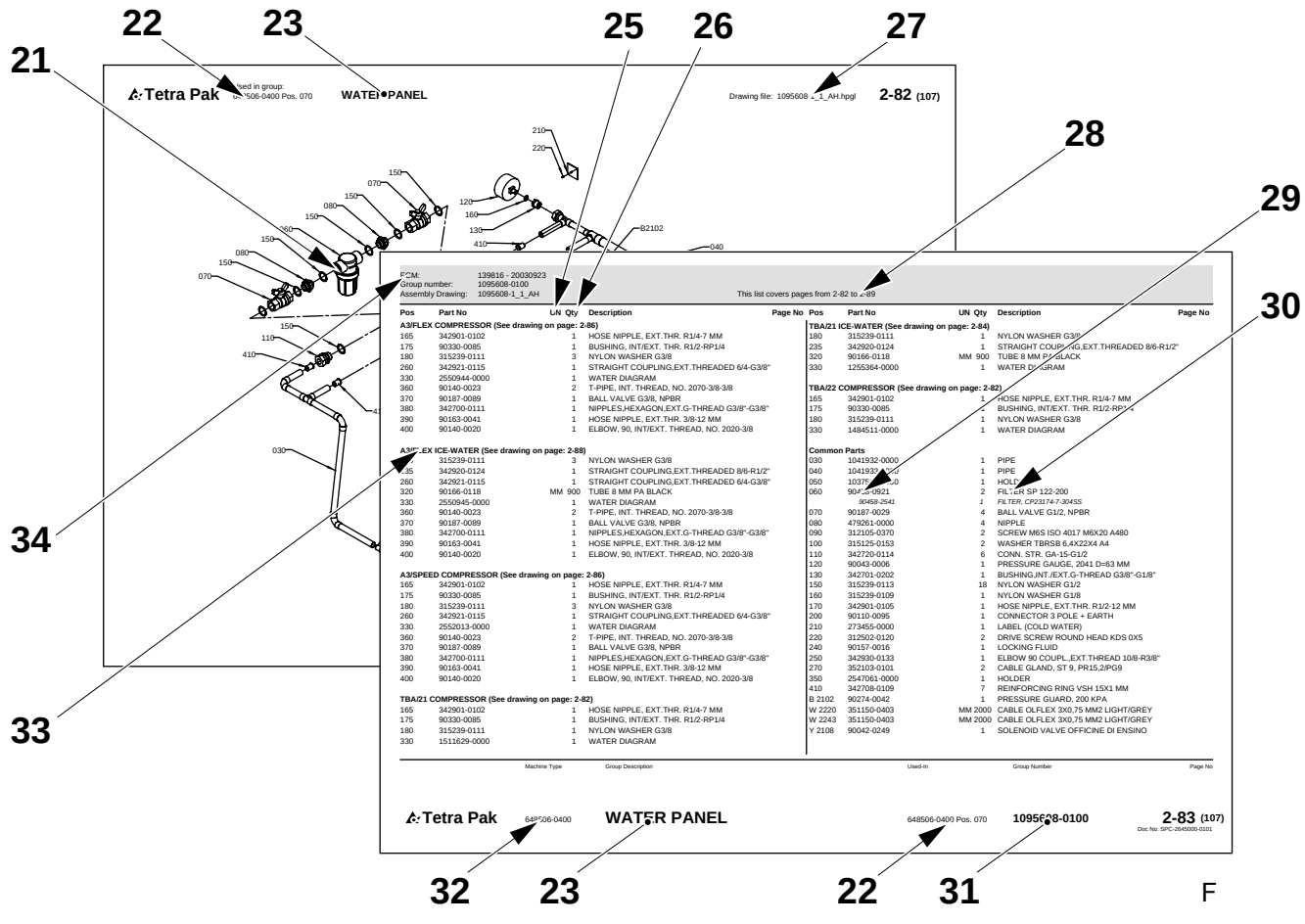
22
23
25
26
27
21
28
29
30
34
33
Tetra Pak
Used in group:
Pos. 070
WATER PANEL
Drawing file: 1095608-1_1_AH.hpgl
2-82 (107)
210
220
150
070
080
150
150
080
150
070
120
160
130
410
B2102
040
030
110
410
ECM: 139816 - 20030923
Group number: 1095608-0100
Assembly Drawing: 1095608-1_1_AH
This list covers pages from 2-82 to 2-89
Pos Part No UN Qty Description Page No
A3/FLEX COMPRESSOR (See drawing on page: 2-86)
165 342901-0102 1 HOSE NIPPLE, EXT.THR. R1/4-7 MM
175 90330-0085 1 BUSHING, INT/EXT. THR. R1/2-RP1/4
180 315239-0111 3 NYLON WASHER G3/8
260 342921-0115 1 STRAIGHT COUPLING,EXT.THREADED 6/4-G3/8"
330 2550944-0000 1 WATER DIAGRAM
360 90140-0023 2 T-PIPE, INT. THREAD, NO. 2070-3/8-3/8
370 90187-0089 1 BALL VALVE G3/8, NPBR
380 342700-0111 1 NIPPLES,HEXAGON,EXT.G-THREAD G3/8"-G3/8"
390 90163-0041 1 HOSE NIPPLE, EXT.THR. 3/8-12 MM
400 90140-0020 1 ELBOW, 90, INT/EXT. THREAD, NO. 2020-3/8
A3/FLEX ICE-WATER (See drawing on page: 2-88)
235 315239-0111 3 NYLON WASHER G3/8
235 342920-0124 1 STRAIGHT COUPLING,EXT.THREADED 8/6-R1/2"
260 342921-0115 1 STRAIGHT COUPLING,EXT.THREADED 6/4-G3/8"
320 90166-0118 MM 900 TUBE 8 MM PA BLACK
330 2550945-0000 1 WATER DIAGRAM
360 90140-0023 2 T-PIPE, INT. THREAD, NO. 2070-3/8-3/8
370 90187-0089 1 BALL VALVE G3/8, NPBR
380 342700-0111 1 NIPPLES,HEXAGON,EXT.G-THREAD G3/8"-G3/8"
390 90163-0041 1 HOSE NIPPLE, EXT.THR. 3/8-12 MM
400 90140-0020 1 ELBOW, 90, INT/EXT. THREAD, NO. 2020-3/8
A3/SPEED COMPRESSOR (See drawing on page: 2-86)
165 342901-0102 1 HOSE NIPPLE, EXT.THR. R1/4-7 MM
175 90330-0085 1 BUSHING, INT/EXT. THR. R1/2-RP1/4
180 315239-0111 3 NYLON WASHER G3/8
260 342921-0115 1 STRAIGHT COUPLING,EXT.THREADED 6/4-G3/8"
330 2552013-0000 1 WATER DIAGRAM
360 90140-0023 2 T-PIPE, INT. THREAD, NO. 2070-3/8-3/8
370 90187-0089 1 BALL VALVE G3/8, NPBR
380 342700-0111 1 NIPPLES,HEXAGON,EXT.G-THREAD G3/8"-G3/8"
390 90163-0041 1 HOSE NIPPLE, EXT.THR. 3/8-12 MM
400 90140-0020 1 ELBOW, 90, INT/EXT. THREAD, NO. 2020-3/8
TBA/21 COMPRESSOR (See drawing on page: 2-82)
165 342901-0102 1 HOSE NIPPLE, EXT.THR. R1/4-7 MM
175 90330-0085 1 BUSHING, INT/EXT. THR. R1/2-RP1/4
180 315239-0111 1 NYLON WASHER G3/8
330 1511629-0000 1 WATER DIAGRAM
TBA/21 ICE-WATER (See drawing on page: 2-84)
180 315239-0111 1 NYLON WASHER G3/8
235 342920-0124 1 STRAIGHT COUPLING,EXT.THREADED 8/6-R1/2"
320 90166-0118 MM 900 TUBE 8 MM PA BLACK
330 1255364-0000 1 WATER DIAGRAM
TBA/22 COMPRESSOR (See drawing on page: 2-82)
165 342901-0102 1 HOSE NIPPLE, EXT.THR. R1/4-7 MM
175 90330-0085 1 BUSHING, INT/EXT. THR. R1/2-RP1/4
180 315239-0111 1 NYLON WASHER G3/8
330 1484511-0000 1 WATER DIAGRAM
Common Parts
030 1041932-0000 1 PIPE
040 1041933-0000 1 PIPE
050 1037[illegible]-0000 1 HOLDER
060 90458-0921 2 FILTER SP 122-200
90458-2541 FILTER, CP23174-7-304SS
070 90187-0029 4 BALL VALVE G1/2, NPBR
080 479261-0000 4 NIPPLE
090 312105-0370 2 SCREW M6S ISO 4017 M6X20 A480
100 315125-0153 2 WASHER TBRSB 6,4X22X4 A4
110 342720-0114 6 CONN. STR. GA-15-G1/2
120 90043-0006 1 PRESSURE GAUGE, 2041 D=63 MM
130 342701-0202 1 BUSHING,INT./EXT.G-THREAD G3/8"-G1/8"
150 315239-0113 18 NYLON WASHER G1/2
160 315239-0109 1 NYLON WASHER G1/8
170 342901-0105 1 HOSE NIPPLE, EXT.THR. R1/2-12 MM
200 90110-0095 1 CONNECTOR 3 POLE + EARTH
210 273455-0000 1 LABEL (COLD WATER)
220 312502-0120 2 DRIVE SCREW ROUND HEAD KDS 0X5
240 90157-0016 1 LOCKING FLUID
250 342930-0133 1 ELBOW 90 COUPL.,EXT.THREAD 10/8-R3/8"
270 352103-0101 2 CABLE GLAND, ST 9, PR15,2/PG9
350 2547061-0000 1 HOLDER
410 342708-0109 7 REINFORCING RING VSH 15X1 MM
B 2102 90274-0042 1 PRESSURE GUARD, 200 KPA
W 2220 351150-0403 MM 2000 CABLE OLFLEX 3X0,75 MM2 LIGHT/GREY
W 2243 351150-0403 MM 2000 CABLE OLFLEX 3X0,75 MM2 LIGHT/GREY
Y 2108 90042-0249 1 SOLENOID VALVE OFFICINE DI ENSINO
Pos Part No UN Qty Description Page No
Machine Type Group Description Used-In Group Number Page No
Tetra Pak 648506-0400 WATER PANEL 648506-0400 Pos. 070 1095608-0100 2-83 (107)
Doc No: SPC-2645000-0101
32 23 22 31
F

Introduction

Manual Information

Tetra Pak recommends reading all delivered manuals carefully. Make sure that the delivered manuals are available to personnel who operate or maintain the equipment.

It is important to keep this catalogue for the lifetime of the equipment and to pass the catalogue on to any subsequent holder or user.

Tetra Pak will not be held responsible for any damage to the equipment caused by not following the instructions given in the manuals that accompany this equipment.

Delivered Manuals

Manuals delivered with this equipment may include

- CM
  The Conversion Manual provides technicians with information on converting the equipment between different production modes.
- EM
  The Electrical Manual provides technicians with information about the equipment's electrical system.
- IM
  The Installation Manual provides technicians with information required to safely install the equipment.
- MM
  The Maintenance Manual provides technicians with information on maintaining the equipment.
- OM
  The Operation Manual manual provides the operator with information on handling and operating the equipment before, during, and after production.
- SPC
  The Spare Parts Catalogue provides the information necessary to order spare parts from Tetra Pak
- TeM
  The Technical Manual
  - provides technicians with information required to safely install the equipment
  - provides technicians with information on maintaining the equipment
  - provides technicians with information about the machine's/ equipment's electrical system
  - provides the information necessary to order spare parts from Tetra Pak.

Page Layout

Refer to the illustration (A) on page i-5: The main pages in a Spare Parts Catalogue consist of an illustration page (1) and a corresponding list page (7). The page number (5) is shown in the header of an illustration page and in the footer of a list page. The document number (6) is shown in the footer of a list page.

Page Numbering

Refer to the illustration (A) on page i-5: A page number (5) has three parts:

- chapter number (2)
- consecutive page number within the chapter (3)
- total number of pages in the chapter (4)

Machine Introduction

Manufacturer

For the manufacturer's name and address, see the second page of this catalogue.

Service

To order spare parts for this machine, or to report problems associated with operating this machine, contact the nearest Tetra Pak office.

Contact the Liaison with other inquiries, comments, or suggestions for improvement regarding the equipment and its documentation.

Identification

CE Classification

This equipment complies with the basic health and safety regulations of the European Economic Area (EEA).

Machine Plate

The illustration (B) on page i-5 shows an example of a machine plate. An illustration of the valid machine plate and its location on the equipment is shown in the Introduction chapter of the manuals delivered with this equipment. The machine plate contains the data listed below, needed when contacting Tetra Pak concerning this specific equipment.

- Machine type (8)
- Volume (9)
- Drawing specifications (10)
- Machine serial number (11)
- Manufacturer (12)
- CE mark (13)
- Year of manufacture (14)

The illustration (C) on page i-5 shows an example of a machine specification. Make sure that the equipment data listed in the front pages of this manual corresponds to the machine plate data and the machine specification.

How to Use This Spare Parts Catalogue

Locate a Spare Part Number

a) Refer to the illustration (D) on page i-5: Go to the chapter number (15) indicated beside the main group that contains the part you want to locate.

Items b) and c) refer to the illustration (E) on page i-6.

b) On the main group illustration, look for the machine subgroup (17) that contains the part or subgroup you are looking for. Note the position number (18) and go to the list page that follows the illustration.

c) Look for the position number/reference designation (16) or the subgroup name (19). Go to the corresponding page number (20) listed in the right-hand column. Tetra Pak has chosen to always use the function oriented structure for reference designation. The prefix indicating function oriented structure (=) is not shown in the reference designation.

Items d) and e) refer to the illustration (F) on page i-6.

d) Locate the part (21) that you are looking for on the subgroup illustration and note the part's position number.

e) The part number (29) and part description (30) are listed beside the position number on the list page.

Information Listed in a Spare Parts Catalogue

The list below refers to the illustration (F) on page i-6. A Spare Parts Catalogue contains the following information about groups, subgroups, and spare parts for the equipment:

- Group structure reference (22). Indicates the next higher group in the equipment list structure.
- Group name (23)
- Unit of measure (25)
- Quantity (26)
- Assembly drawing number (27)
- List page range (28). Included if there are multiple pages in the group illustration or list.
- Part or subgroup number (29)
- Subgroup name or part description (30)
- Group number (31)
- Equipment number (32)
- Group information heading (33). Indicates if the section below the heading is for a specific machine variant or if it is a list of common parts. If a list has more than one variant and each variant has its own assembly drawing, a page reference to the variant's assembly drawing is shown.
- Internal information (34)

Увод

Информация за ръководството

Tetra Pak Ви препоръчва да прочетете внимателно всички доставени ръководства. Проверете дали доставените ръководства са достъпни за служителите, които поддържат или работят с оборудването.

Важно е да запазите този каталог през целия живот на оборудването и да го предадете на трети лица, които ще използват или съхраняват оборудването.

Tetra Pak не може да бъде държана под отговорност за щети върху оборудването, причинени от неспазване на даденте инструкции в ръководствата, които съпровождат оборудването.

Доставени ръководства

Ръководствата, доставени с това оборудване, могат да включват

- CM
  Ръководството за приспособяване осигурява на техническите лица информация за приспособяването на оборудване към различни производствени режими.
- EM
  Електрическото ръководство осигурява на техническите лица информация за електрическата система на оборудването.
- IM
  Ръководството за инсталиране предоставя на техническите лица информацията, която е необходима за безопасно инсталиране на оборудването.
- MM
  Ръководството за поддръжка предоставя на техническите лица информация относно поддържането на оборудването.
- OM
  Ръководството за операции предоставя на операторите информация за това, как да боравят и функционират с оборудването преди, по време на и след производство.
- SPC
  Каталогът с резервни части предоставя необходимата информация за поръчка на резервни части от Tetra Pak
- TeM
  Техническото ръководство
  - предоставя на техническите лица необходимата информация за безопасно инсталиране на оборудването
  - предоставя на техническите лица информация за поддръжка на оборудването
  - предоставя на техническите лица информация за електрическата система на машината/оборудването
  - предоставя необходимата информация за поръчка на резервни части от Tetra Pak.

Формат на страниците

Разгледайте илюстрация (A) на страница i-5: Главните страници в Каталога с резервни части се състоят от страница с илюстрация (1) и прилежаща страница със списък (7). Номерът на страницата (5) е посочен в горната част на страницата с илюстрация и в долната част на страницата със списъка. Номерът на документа (6) е показан в долната част на страницата със списъка.

Номериране на страници

Разгледайте илюстрация (A) на страница i-5: Един номер на страница (5) има три части:

- номер на глава (2)
- последователен номер на страница в една глава (3)
- общ брой страници в главата (4)

Машини Увод

Производител

Вижте втората страница на този каталог, за да проверите името и адреса на производителя.

Обслужване

За да поръчате резервни части за тази машина или да докладвате за проблеми, свързани с работата с тази машина, се свържете с най-близкия офис на Tetra Pak.

Свържете се с отдела за контакти с клиенти за други запитвания, коментари и предложения за подобрение по отношение на оборудването и прилежащата му документация.

Идентификация

Класификация на ЦЕ

Това оборудване отговаря на основните наредби, свързани с опазване на здравето и безопасността на Европейската Икономическа Общност (ЕИО).

Табелка на машина

Илюстрация (B) на страница i-5 показва пример с табелка на машина. В уводната глава на ръководствата, доставени с това оборудване, е показана илюстрация с валидната табелка на машината и нейното положение върху оборудването. Табелката на машината съдържа посочените по-долу данни, които Ви трябват, когато се свързвате с Tetra Pak относно това специфично оборудване.

- Тип машина (8)
- Обем (9)
- Спесификации за чертане (10)
- Сериен номер на машината (11)
- Производител (12)
- CE печат (13)
- Година на производство (14)

Илюстрация (C) на страница i-5 показва пример със спесификация за машина. Проверете дали данните за оборудването, изброени на предните страници в това ръководство отговарят на данните от табелката на машината и на спесификацията на машината.

Как да използвате този Каталог за резервни части

Намерете Номер на резервна част

a) Разгледайте илюстрация (D) на страница i-5: Отидете в глава номер (15) посочена до главната група, която съдържа частта, която искате да намерите.

Артикули b) и c) се отнасят до илюстрация (E) на страница i-6.

b) На главната обща илюстрация вижте подгрупата на машината (17), която съдържа частта или подгрупата, която търсите. Намерете номера на позицията (18) и отворете на страницата със списъка, която е след илюстрацията.

c) Намерете номера на позицията/референцията (16) или името на подгрупата (19). Отворете съответстващия номер на страница (20) в дясната колона. Tetra Pak е избрала да използва винаги функционално-ориентирана структура при обозначаване на референциите. Префиксът, който показва функционално-ориентирана структура (=) не е посочен в обозначаването на референциите.

Артикули d) и e) се отнасят до илюстрация (F) на страница i-6.

d) Намерете частта (21), която търсите в илюстрацията на подгрупата и запомнете номера на частта.

e) Номерът на частта (29) и описанието на частта (30) са изброени до номера на позицията на страницата със списъка.

Изброена информация в Каталога с резервни части

По-долу посоченият списък се отнася до илюстрация (F) на страница i-6. Каталогът с резервни части съдържа следната информация за групи, подгрупи и резервни части за оборудването:

- Референция за структурата (22). Показва следващата по-голяма група в структурата със списъка на оборудването.
- Име на група (23)
- Единица мярка (25)
- Количество (26)
- Номер за монтажен чертеж (27)
- Обхват на страницата със списък (28). Включен, ако има няколко страници в илюстрацията на групата или списъка.
- Номер на част или подгрупа (29)
- Име на подгрупа или описание на част (30)
- Номер на група (31)
- Номер на оборудване (32)
- Референция за информацията за групата (33). Показва дали частта под заглавието е за специфична версия на машината или е списък с общи части. Ако един списък има повече от един вариант и всеки вариант има собствен монтажен чертеж, се показва референцията на страницата към монтажния чертеж на варианта.
- Вътрешна информация (34)

Úvod

Informace o manuálu

Tetra Pak doporučuje, abyste si pozorně přečetli všechny dodané příručky. Přesvědčte se, že dodané manuály jsou k dispozici personálu, který obsluhuje nebo provádí údržbu zařízení.

Je důležité ponechat si tuto příručku po celou dobu životnosti zařízení a předat ho jakémukoliv následujícímu vlastníkovi nebo uživateli.

Tetra Pak nebude odpovídat za žádné škody zařízení, způsobené nedodržováním pokynů uvedených v této příručce.

Dodané příručky

Příručky dodané s tímto zařízením mohou obsahovat

- CM
  Konverzní manuál (CM) poskytuje technikům informace o konverzi zařízení mezi různými výrobními režimy.
- EM
  Elektrický manuál (EM) poskytuje technikům informace o elektrickém systému tohoto zařízení.
- IM
  Instalační manuál (IM) poskytuje technikům informace potřebné k bezpečné instalaci zařízení.
- MM
  Údržbový manuál (MM) poskytuje technikům informace o údržbě tohoto zařízení.
- OM
  Provozní manuál (OM) poskytuje operátorovi informace o manipulaci s tímto zařízením a provozu před, během a po výrobě.
- SPC
  Katalog náhradních dílů (SPC) poskytuje informace potřebné pro objednávání náhradních dílů od společnosti Tetra Pak
- TeM
  Technický manuál
  - poskytuje technikům informace potřebné k bezpečné instalaci tohoto zařízení
  - poskytuje technikům informace o údržbě tohoto zařízení
  - poskytuje technikům informace o elektrickém systému tohoto zařízení
  - poskytuje informace potřebné pro objednávání náhradních dílů od společnosti Tetra Pak

Rozvržení stránky

Viz obrázek (A) na straně i-5: Hlavní strany Katalogu náhradních dílů obsahují stranu s obrázky (1) a odpovídající stranu seznamu (7). Číslo strany (5) je uvedeno v záhlaví strany s obrázky a v zápatí strany seznamu. Číslo dokumentu (6) je uvedeno v zápatí strany seznamu.

Číslování stran

Viz obrázek (A) na straně i-5: Číslo strany (5) sestává ze tří částí:

- číslo kapitoly (2)
- pořadové číslo strany (3) v kapitole
- celkový počet stránek (4) v kapitole

Úvod ke stroji

Výrobce

Název a adresa výrobce je uvedena na druhé straně tohoto katalogu.

Servis

Chcete-li objednat náhradní díly nebo ohlásit problémy související s provozem tohoto stroje, kontaktujte nejbližší kancelář Tetra Pak.

S dalšími dotazy, připomínkami nebo náměty na vylepšení ohledně zařízení a této dokumentace se obracejte na kontaktní osobu.

Identifikace

Klasifikace CE

Toto zařízení splňuje základní zdravotní a bezpečnostní předpisy Evropského hospodářského prostoru (EEA).

Štítek na stroji

Obrázek (B) na straně i-5 znázorňuje příklad štítku na stroji. Obrázek platného štítku na stroji a jeho umístění na zařízení je uveden v příručkách dodaných s tímto strojem v kapitole Úvod. Na štítku jsou uvedeny údaje potřebné při kontaktování společnosti Tetra Pak, týkající se tohoto specifického zařízení.

- Typ stroje (8)
- Objem (9)
- Výkresové specifikace (10)
- Výrobní číslo stroje (11)
- Výrobce (12)
- Označení CE (13)
- Rok výroby (14)

Obrázek (C) na straně i-5 zobrazuje příklad specifikace stroje. Přesvědčte se, že údaje o zařízení uvedená v seznamu na předních stranách tohoto manuálu odpovídají údajům štítku na stroji a specifikaci stroje.

Jak používat tento Katalog náhradních dílů

Vyhledejte číslo náhradního dílu

a) Viz obrázek (D) na straně i-5: Přejděte na číslo kapitoly (15) uvedené vedle hlavní skupiny, která obsahuje hledaný díl.

Položky b) a c) odkazují na obrázek (E) na straně i-6.

b) Na vyobrazení hlavní skupiny vyhledejte strojní podskupinu (17), která obsahuje hledaný díl nebo podskupinu. Poznamenejte si číslo pozice (18) a přejděte na stranu seznamu vyplývající z obrázku.

c) Vyhledejte číslo pozice/označení odkazu (16) nebo název podskupiny (19). Přejděte na odpovídající číslo strany (20) v seznamu v pravém sloupci. Tetra Pak zvolil pro označování odkazu používat vždy uspořádání orientované na funkci. Prefix indikující uspořádání orientované na funkci (=) není uveden v označení odkazu.

Položky d) a e) odkazují na obrázek (F) na straně i-6.

d) Vyhledejte díl (21), který hledáte na vyobrazení podskupiny a poznamenejte si číslo pozice dílu.

e) Číslo dílu (29) a popis dílu (30) jsou uvedeny v seznamu vedle čísla pozice na straně seznamu.

Informace uvedené v seznamu v Katalogu náhradních dílů

Níže uvedený seznam odkazuje na obrázek (F) na straně i-6. Katalog náhradních dílů obsahuje následující informace o skupinách, podskupinách a náhradních dílech pro toto zařízení:

- Odkaz na uspořádání skupiny (22). Indikuje další vyšší skupinu v uspořádání seznamu zařízení.
- Název skupiny (23)
- Měrná jednotka (25)
- Množství (26)
- Číslo montážního výkresu (27)
- Rozsah stran seznamu (28). Včetně toho, zda existuje více stran v obrázku skupiny nebo seznamu.
- Díl nebo číslo podskupiny (29)
- Název podskupiny nebo popis dílu (30)
- Číslo skupiny (31)
- Číslo zařízení (32)
- Záhlaví informace o skupině (33). Indikuje, že oddíl pod záhlavím je pro specifickou variantu stroje nebo jde-li o seznam běžných dílů. Jestliže seznam obsahuje více než jednu variantu a každá varianta má svůj vlastní montážní výkres, pak je uveden odkaz na stranu montážního výkresu této varianty.
- Interní informace (34)

Indledning

Oplysninger om manualen

Tetra Pak anbefaler, at alle leverede manualer læses omhyggeligt. Sørg for, at de udleverede manualer er til rådighed for personale, som arbejder med eller vedligeholder udstyret.

Det er vigtigt at opbevare dette katalog hele udstyrets levetid og give kataloget videre til eventuelt kommende ejere eller brugere.

Tetra Pak kan ikke holdes ansvarlig for eventuel beskadigelse af udstyr, der opstår, fordi instruktionerne i manualerne til dette udstyr ikke følges.

Udleverede manualer

De manualer, der leveres sammen med dette udstyr, kan omfatte

- CM
  Denne konverteringsmanual forsyner teknikere med oplysninger om konvertering af udstyret mellem forskellige produktionstilstande.
- EM
  Denne elektriske manual forsyner teknikere med informationer om udstyrets elektriske system.
- IM
  Denne installationsmanual forsyner teknikere med nødvendig information i forbindelse med sikker installation af udstyret.
- MM
  Denne vedligeholdelsesmanual forsyner teknikere med information om vedligeholdelse af udstyret.
- OM
  Denne betjeningsmanual giver operatøren oplysninger om betjening af udstyret før, under og efter produktion.
- SPC
  Denne reservedelskatalog indeholder oplysninger, der er nødvendig for at bestille reservedele fra Tetra Pak
- TeM
  Den tekniske manual
  – forsyner teknikere med information, der er nødvendig for en sikker installation af udstyret.
  – forsyner teknikere med information om vedligeholdelse af udstyret.
  – forsyner teknikere med information om maskinens/udstyrets elektriske system.
  – indeholder de informationer, der er nødvendige for at kunne bestille reservedele fra Tetra Pak.

Sidelayout

Se illustration (A) på side i-5: Hovedsiderne i et reservedelskatalog består af en illustrationsside (1) og en tilsvarende listeside (7). Sidenummeret (5) vises i sidehovedet på en illlustrationsside og i sidefoden på en listeside. Dokumentnummeret (6) vises i sidefoden på en listeside.

Sidenummerering

Se illustrationen (A) på side i-5: Et sidenummer (5) har tre dele:

- kapitelnummer (2)
- fortløbende sidenummer i kapitlet (3)
- samlet sideantal i kapitlet (4)

Præsentation af maskinen

Producent

Producentens navn og adresse findes på side to i dette katalog.

Service

Kontakt nærmeste Tetra Pak-kontor for at bestille reservedele eller rapportere problemer i forbindelse med betjening af denne maskine.

Henvendelse til vores kontaktperson med andre forespørgsler, kommentarer eller forslag til forbedring angående udstyr og dokumentation.

Identificering

CE-klassificering

Dette udstyr lever op til de grundlæggende regulativer for sundhed og sikkerhed indenfor den Europæiske Økonomiske Samarbejdsområde (EØS).

Maskinskilt

Illustrationen (B) på side i-5 viser et eksempel på et maskinskilt.
En illustration af et gyldigt maskinskilt og dets placering på udstyret er vist i indledningskapitlet i de manualer, der leveres med dette udstyr. Maskinskiltet indeholder nedennævnte data. Disse er nødvendige ved kontakt med Tetra Pak vedrørende dette specifikke udstyr.

- Maskintype (8)
- Volumen (9)
- Tegningsspecifikationer (10)
- Maskinens serienummer (11)
- Producent (12)
- CE-mærke (13)
- Produktionsår (14)

Illustrationen (C) på side i-5 viser et eksempel på en maskinspecifikation. Kontroller, at de udstyrsdata, der er anført på de første sider i denne manual, svarer til maskinskiltsdataene og maskinspecifikationen.

Sådan bruges dette reservedelskatalog.

Find et reservedelsnummer

a) Se illustrationen (D) på side i-5: Gå til kapitelnummeret (15), der er angivet ved siden af hovedgruppen, der indeholder den del, der ønskes fundet.

Punkterne b) og c) refererer til illustrationen (E) på side i-6.

b) I hovedgruppeillustrationen skal man se efter maskinundergruppen (17), som indeholder den del eller undergruppe, der søges. Bemærk placeringsnummeret (18), og gå til listesiden, som følger illustrationen.

c) Se efter placeringsnummeret/henvisningsbetegnelse (16) eller undergruppens navn (19). Gå til det tilsvarende sidenummer (20) angivet i den højre kolonne. Tetra Pak har valgt altid at anvende den funktionsorienterede struktur til henvisningsbetegnelse. Præfikset angiver funktionsorienteret struktur (=) ikke vist i henvisningsbetegnelsen.

Punkterne d) og e) refererer til illustrationen (F) på side i-6.

d) Find den del (21), du søger i undergruppeillustrationen, og notér delens placeringsnummer.

e) Reservedelsnummeret (29) og -beskrivelsen (30) er angivet ved siden af placeringsnummeret på listesiden.

Informationer der er angivet i et reservedelskatalog

Listen nedenfor refererer til illustrationen (F) på side i-6. Et reservedelskatalog indeholder følgende informationer om grupper, undergrupper og reservedele til udstyret:

- Gruppestrukturreference (22). Angiver næste overordnede gruppe i udstyrslistestrukturen.
- Gruppenavn (23)
- Måleenhed (25)
- Antal (26)
- Samletegningsnummer (27)
- Listens sideområde (28). Er angivet, hvis gruppeillustrationen eller -listen inkluderer mange sider.
- Del- eller undergruppenummer (29)
- Undergruppens navn eller delsbeskrivelse (30)
- Gruppenummer (31)
- Udstyrsnummer (32)
- Overskrift for gruppeinformation (33). Angiver, om afsnittet under overskriften er for en specifik maskinvariant, eller om det er en liste over fælles dele. Hvis en liste har mere end én variant, og hver variant har sin egen samletegning, vises en sidereference til variantens samletegning.
- Intern information (34)

Einleitung

Informationen über das Handbuch

Tetra Pak empfiehlt, alle mitgelieferten Handbücher sorgfältig durchzulesen. Stellen Sie sicher, dass die Handbücher dem Personal, das die Ausrüstung betreibt oder wartet, zur Verfügung steht.

Es ist wichtig, dass Sie diesen Katalog für die gesamte Lebensdauer der Ausrüstung vorliegen haben und einem etwaigen Nachbesitzer oder -betreiber übergeben.

Tetra Pak haftet nicht für Schäden an der Ausrüstung, die aufgrund von Nichtbeachtung der Anweisungen aus den Handbüchern, die mit diesem Gerät geliefert werden, entstehen.

Gelieferte Handbücher

Die Handbücher, die mit dieser Ausrüstung geliefert wird, können Folgendes beinhalten

- CM
  Das Umbauhandbuch gibt den Technikern Informationen über den Umbau der Ausrüstung zwischen verschiedenen Produktionsweisen.
- EM
  Das Elektrohandbuch gibt den Technikern Informationen zum Elektrosystem der Ausrüstung.
- IM
  Das Installationshandbuch gibt den Technikern Informationen für die sichere Installation der Ausrüstung.
- MM
  Das Wartungshandbuch gibt den Technikern Informationen für die Wartung der Ausrüstung.
- OM
  Das Betriebshandbuch gibt dem Bediener Informationen über die Bedienung und den Betrieb der Ausrüstung vor, während und nach der Produktion.
- SPC
  Der Ersatzteilkatalog liefert die Informationen, die für die Bestellung von Ersatzteilen bei Tetra Pak erforderlich sind.
- TeM
  Das technische Handbuch
  - gibt den Technikern Informationen für die sichere Installation der Ausrüstung
  - gibt den Technikern Informationen für die Wartung der Ausrüstung
  - gibt den Techniker Informationen zum Elektrosystem der Ausrüstung/der Maschine
  - liefert die Informationen, die für die Bestellung von Ersatzteilen bei Tetra Pak erforderlich sind.

Seitenlayout

Bezugnahme auf Abbildung (A) auf Seite i-5: Die Hauptseiten in einem Ersatzteilkatalog bestehen aus einer Abbildungsseite (1) und einer entsprechenden Listenseite (7). Die Seitennummer (5) wird in der Kopfzeile einer Abbildungsseite und in der Fußzeile einer Listenseite aufgeführt. Die Dokumentennummer (6) wird in der Fußzeile einer Listenseite aufgeführt.

Seitennummerierung

Bezugnahme auf Abbildung (A) auf Seite i-5: Eine Seitennummer (5) besteht aus drei Teilen:

- Kapitelnummer (2)
- Fortlaufende Seitennummer innerhalb des Kapitels (3)
- Gesamtzahl der Seiten im Kapitel (4)

Einführung zur Maschine

Hersteller

Bitte entnehmen Sie den Namen und die Adresse des Herstellers der zweiten Seite dieses Katalogs.

Service

Zur Bestellung von Ersatzteilen für diese Maschine oder um Probleme im Zusammenhang mit dem Betrieb dieser Maschine zu melden, wenden Sie sich bitte an das nächstgelegene Büro von Tetra Pak.

Wenden Sie sich bei anderen Anfragen, Kommentaren oder Verbesserungsvorschlägen mit Bezug auf die Ausrüstung und seine Dokumentation an die Verbindungsstelle.

Identifizierung

CE-Klassifizierung

Diese Ausrüstung erfüllt die wesentlichen Anforderungen des Europäischen Wirtschaftsraum (EWR) für Gesundheitsschutz und die Sicherheit.

Maschinenschild

Die Abbildung (B) auf Seite i-5 zeigt ein Beispiel eines Maschinenschilds. Die Abbildung eines gültigen Maschinenschildes und seine Position auf der Ausrüstung wird im Einleitungskapitel der mit dieser Ausrüstung gelieferten Handbücher gezeigt. Das Maschinenschild enthält die Daten, die erforderlich sind, wenn Sie sich bezüglich dieser speziallen Ausrüstung an Tetra Pak wenden.

- Maschinentyp (8)
- Volumen (9)
- Zeichnungsspezifikationen (10)
- Seriennummer der Maschine (11)
- Hersteller (12)
- CE-Zeichen (13)
- Baujahr (14)

Die Abbildung (C) auf Seite i-5 zeigt ein Beispiel einer Maschinenspezifikation. Stellen Sie sicher, dass die Ausrüstungsdaten, die in den vorderen Seiten dieses Handbuchs aufgelistet sind, mit den Maschinenschilddaten und der Maschinenspezifikation übereinstimmen.

Benutzung dieses Ersatzteilkatalogs

Finden einer Ersatzteilnummer

a) Bezugnahme auf Abbildung (D) auf Seite i-5: Weiter zur Kapitel nummer (15), die neben der Hauptgruppe angegeben ist, die das entsprechende Teil enthält.

Die Positionen b) und c) beziehen sich auf die Abbildung (E) auf Seite i-6.

b) Suchen Sie auf der Hauptgruppenillustration nach der Maschinen-Untergruppe (17), die das gesuchte Teil oder die Untergruppe enthält. Notieren Sie die Positionsnummer (18) und gehen Sie dann zur Listenseite, die der Abbildung folgt.

c) Suchen Sie nach der Positionsnummer/Referenzbezeichnung (16) oder dem Namen der Untergruppe (19). Gehen Sie zur entsprechenden Seitennummer (20), die in der rechten Spalte aufgelistet ist. Tetra Pak hat sich dazu entschieden, stets eine funktionsorientierte Struktur für die Referenzbezeichnung zu verwenden. Die vorangestellte Kennzeichnung, welche die funktionsorientierte Struktur angibt (=), wird in der Referenzbezeichnung nicht angezeigt.

Die Positionen d) und e) beziehen sich auf die Abbildung (F) auf Seite i-6.

d) Finden Sie das gesuchte Teil (21) auf der Abbildung der Untergruppe und notieren Sie die Positionsnummer des Teils.

e) Die Teilenummer (29) und die Teilebeschreibung (30) werden neben der Positionsnummer auf der Listenseite aufgelistet.

In einem Ersatzteilkatalog aufgelistete Informationen

Die folgende Liste bezieht sich auf die Abbildung (F) auf Seite i-6. Ein Ersatzteilkatalog enthält folgende Informationen über Gruppen, Untergruppen und Ersatzteile für die Ausrüstung:

- Gruppenstrukturreferenz (22). Sie gibt die nächst höhere Gruppe in der Ausrüstungslistenstruktur an.
- Gruppenname (23)
- Maßeinheit (25)
- Menge (26)
- Nummer der Zusammenbauzeichnung (27)
- Listenseitenbereich (28). Enthalten, wenn es mehrere Seiten in der Gruppenabbildung oder Liste gibt.
- Teile- oder Untergruppennummer (29)
- Untergruppenname oder Teilebeschreibung (30)
- Gruppennummer (31)
- Ausrüstungsnummer (32)
- Gruppeninformationsüberschrift (33). Gibt an, ob sich der Abschnitt unter der Überschrift auf eine spezifische Maschinenvariante bezieht oder ob es sich um eine Liste der allgemeinen Teile handelt. Wenn eine Liste mehr als eine Variante hat und jede Variante über eine eigene Zusammenbauzeichnung verfügt, wird eine Seitenreferenz zur Zusammenbauzeichnung angezeigt.
- Interne Informationen (34)

Εισαγωγή

Πληροφορίες για το Εγχειρίδιο

Η Tetra Pak σάς συνιστά να διαβάζετε προσεκτικά όλα τα παρεχόμενα εγχειρίδια. Εξασφαλίζετε ότι όλα τα παρεχόμενα εγχειρίδια διατίθενται στο προσωπικό που χειρίζεται ή συντηρεί τον εξοπλισμό.

Είναι σημαντικό να διατηρείτε αυτό τον κατάλογο καθ' όλη τη διάρκεια ζωής του εξοπλισμού καθώς και να παραδίδετε τον κατάλογο στον τυχόν επόμενο ιδιοκτήτη ή χρήστη του εξοπλισμού.

Η Tetra Pak δεν πρόκειται να αναλάβει καμία ευθύνη για οποιαδήποτε ζημιά που μπορεί να προκληθεί στον εξοπλισμό εξαιτίας της μη τήρησης των οδηγιών οι οποίες παρέχονται στα εγχειρίδια που συνοδεύουν αυτό τον εξοπλισμό.

Παρεχόμενα Εγχειρίδια

Στα εγχειρίδια που παρέχονται μαζί μ' αυτό τον εξοπλισμό, μπορεί να περιλαμβάνονται τα εξής:

- CM
  Αυτό το Εγχειρίδιο Μετατροπής παρέχει στους τεχνικούς πληροφορίες για τη μετατροπή του εξοπλισμού μεταξύ των διάφορων λειτουργιών παραγωγής.
- EM
  Αυτό το Ηλεκτρικό Εγχειρίδιο παρέχει στους τεχνικούς πληροφορίες για το ηλεκτρικό σύστημα του εξοπλισμού.
- IM
  Αυτό το Εγχειρίδιο Εγκατάστασης παρέχει στους τεχνικούς τις απαιτούμενες πληροφορίες για την ασφαλή εγκατάσταση του εξοπλισμού.
- MM
  Αυτό το Εγχειρίδιο Συντήρησης παρέχει στους τεχνικούς πληροφορίες για τη συντήρηση του εξοπλισμού.
- OM
  Αυτό το Εγχειρίδιο Χειρισμού παρέχει στο χειριστή πληροφορίες για το χειρισμό και τη λειτουργία του εξοπλισμού πριν, κατά τη διάρκεια και μετά την παραγωγή.
- SPC
  Αυτός ο Κατάλογος Ανταλλακτικών παρέχει τις απαραίτητες πληροφορίες για την παραγγελία ανταλλακτικών από την Tetra Pak.
- TeM
  Το Τεχνικό Εγχειρίδιο
  - παρέχει στους τεχνικούς τις απαιτούμενες πληροφορίες για την ασφαλή εγκατάσταση του εξοπλισμού
  - παρέχει στους τεχνικούς πληροφορίες για τη συντήρηση του εξοπλισμού
  - παρέχει στους τεχνικούς πληροφορίες για το ηλεκτρικό σύστημα του εξοπλισμού/μηχανής
  - παρέχει τις απαραίτητες πληροφορίες για την παραγγελία ανταλλακτικών από την Tetra Pak.

Διάταξη Σελίδων

Ανατρέξτε στην εικόν (A) της σελίδας i-5: Οι κύριες σελίδες ενός Καταλόγου Ανταλλακτικών αποτελούνται από μία εικονογραφημένη σελίδα (1) και από μία αντίστοιχη σελίδα λίστας (7). Ο αριθμός σελίδας (5) εμφανίζεται στην κεφαλίδα μιας εικονογραφημένης σελίδας και στο υποσέλιδο μιας σελίδας λίστας. Ο αριθμός εγγράφου (6) εμφανίζεται στο υποσέλιδο μιας σελίδας λίστας.

Αρίθμηση Σελίδων

Ανατρέξτε στην εικόνα (A) της σελίδας i-5: Ένας αριθμός σελίδας (5) αποτελείται από τα εξής τρία μέρη:

- αριθμός κεφαλαίου (2)
- αύξων αριθμός σελίδας του κεφαλαίου (3)
- συνολικός αριθμός σελίδων του κεφαλαίου (4)

Παρουσίαση Μηχανής

Κατασκευαστής

Για το όνομα και τη διεύθυνση του κατασκευαστή, ανατρέξτε στη δεύτερη σελίδα αυτού του καταλόγου.

Τεχνική Εξυπηρέτηση

Για να παραγγείλετε ανταλλακτικά για τη συγκεκριμένη μηχανή ή για να αναφέρετε προβλήματα που σχετίζονται με τη λειτουργία αυτής της μηχανής, επικοινωνήστε με το πλησιέστερο γραφείο της Tetra Pak.

Εάν έχετε άλλου είδους ερωτήσεις, σχόλια ή προτάσεις βελτίωσης σχετικά με τον εξοπλισμό και την έγγραφη τεκμηρίωσή του, επικοινωνήστε με το Τμήμα Σχέσεων.

Στοιχεία Ταυτότητας

Σήμανση CE

Αυτός ο εξοπλισμός συμμορφώνεται με τους βασικούς κανονισμούς υγείας και ασφάλειας του Ευρωπαϊκού Οικονομικού Χώρου (ΕΟΧ).

Πινακίδα Αναγνώρισης Μηχανής

Η εικόνα (B) της σελίδας i-5 δείχνει ένα παράδειγμα μιας πινακίδας αναγνώρισης μηχανής.
Μια εικόνα που δείχνει την ενδεδειγμένη μορφή και θέση της πινακίδας αναγνώρισης μηχανής στον εξοπλισμό, παρουσιάζεται στο κεφάλαιο 'Εισαγωγή' των εγχειριδίων που παρέχονται μ' αυτόν τον εξοπλισμό.
Η πινακίδα αναγνώρισης μηχανής αναγράφει τα δεδομένα που παρατίθενται στη συνέχεια, τα οποία είναι απαραίτητα όταν επικοινωνείτε με την Tetra Pak για θέματα που αφορούν αυτό το συγκεκριμένο εξοπλισμό.

- Τύπος μηχανής (8)
- Χωρητικότητα (9)
- Στοιχεία σχεδίου (10)
- Αριθμός σειράς μηχανής (11)
- Κατασκευαστής (12)
- Σήμανση CE (13)
- Έτος κατασκευής (14)

Η εικόνα (Γ) της σελίδας i-5 δείχνει ένα παράδειγμα τεχνικών χαρακτηριστικών μηχανής. Βεβαιωθείτε ότι τα δεδομένα εξοπλισμού που παρατίθενται στις πρώτες σελίδες αυτού του εγχειριδίου συμφωνούν με τα δεδομένα της πινακίδας αναγνώρισης μηχανής και των τεχνικών χαρακτηριστικών μηχανής.

Πώς Χρησιμοποιείται Αυτός ο Κατάλογος Ανταλλακτικών

Εύρεση ενός Αριθμού Ανταλλακτικού

a) Ανατρέξτε στην εικόνα (Δ) της σελίδας i-5: Πηγαίνετε στον αριθμό κεφαλαίου (15) που υποδεικνύεται δίπλα από την κύρια ομάδα της μηχανής η οποία περιλαμβάνει το εξάρτημα που θέλετε να βρείτε.

Τα βήματα b) και c) αναφέρονται στην εικόνα (Ε) της σελίδας i-6.

b) Στην εικόνα της κύριας ομάδας μηχανής, αναζητήστε την υποομάδα μηχανής (17) η οποία περιλαμβάνει το εξάρτημα ή την υποομάδα που αναζητάτε. Σημειώστε τον αριθμό θέσης (18) και πηγαίνετε στη σελίδα λίστας που ακολουθεί την εικόνα.

c) Αναζητήστε τον αριθμό θέσης/ονομασία αναφοράς (16) ή το όνομα υποομάδας (19). Πηγαίνετε στον αντίστοιχο αριθμό σελίδας (20) που αναγράφεται στη δεξιά στήλη. Η Tetra Pak έχει επιλέξει να χρησιμοποιεί πάντα δομή ονομασίας αναφοράς με βάση τη λειτουργία. Το πρόθεμα που υποδεικνύει τη δομή με βάση τη λειτουργία (=) δε φαίνεται στο διάγραμμα αναφοράς.

Τα βήματα d) και e) αναφέρονται στην εικόνα (ΣΤ) της σελίδας i-6.

d) Βρείτε το εξάρτημα (21) που αναζητάτε στην εικόνα υποομάδας μηχανής και σημειώστε τον αριθμό θέσης του εξαρτήματος.

e) Ο αριθμός του εξαρτήματος (29) και η περιγραφή του εξαρτήματος (30) παρατίθενται δίπλα στον αριθμό θέσης στη σελίδα λίστας.

Πληροφορίες που Περιέχονται σε έναν Κατάλογο Ανταλλακτικών

Η λίστα που ακολουθεί αναφέρεται στην εικόνα (F) της σελίδας i-6. Ένας Κατάλογος Ανταλλακτικών περιέχει τις παρακάτω πληροφορίες σχετικά με τις ομάδες, τις υποομάδες και τα ανταλλακτικά του εξοπλισμού:

- Αναφορά δομής ομάδας (22). Υποδηλώνει την επόμενη μεγαλύτερη ομάδα στη δομή λίστας του εξοπλισμού.
- Όνομα ομάδας (23)
- Μονάδα μέτρησης (25)
- Ποσότητα (26)
- Αριθμός σχεδίου συγκροτήματος (27)
- Περιοχή σελίδων λίστας (28). Περιλαμβάνεται εφόσον η εικόνα ή η λίστα μιας ομάδας εκτίθεται σε περισσότερες από μία σελίδες.
- Αριθμός εξαρτήματος ή υποομάδας (29)
- Αριθμός υποομάδας ή περιγραφή εξαρτήματος (30)
- Αριθμός ομάδας (31)
- Αριθμός εξοπλισμού (32)
- Επικεφαλίδα πληροφοριών ομάδας (33). Υποδεικνύει εάν η ενότητα κάτω από την επικεφαλίδα αφορά μια συγκεκριμένη παραλλαγή μηχανής ή αποτελεί μια λίστα κοινών εξαρτημάτων. Σε περίπτωση που μια λίστα περιέχει περισσότερες από μία παραλλαγές και κάθε παραλλαγή έχει ξεχωριστό σχέδιο συγκροτήματος, εμφανίζεται μια παραπομπή προς τη σελίδα όπου βρίσκεται το σχέδιο συγκροτήματος της παραλλαγής.
- Εσωτερικές πληροφορίες (34)

Introducción

Información sobre el manual

Tetra Pak recomienda leer atentamente todos los manuales suministrados. Asegúrese de que los manuales están disponibles para el personal que opera o mantiene el equipo.

Es importante conservar este catálogo durante la vida útil del equipo, así como facilitárselo a cualquier propietario o usuario posterior.

Tetra Pak no se responsabilizará de daños en el equipo por no seguir las instrucciones proporcionadas en los manuales que acompañan este equipo.

Manuales entregados

Los manuales entregados con este equipo pueden incluir:

- CM
  El Manual de conversión proporciona a los técnicos información sobre cómo convertir el equipo a diferentes modos de producción.
- EM
  El Manual eléctrico proporciona a los técnicos información sobre el sistema eléctrico del equipo.
- IM
  El Manual de instalación proporciona a los técnicos la información necesaria para instalar el equipo de manera segura.
- MM
  El Manual de mantenimiento proporciona a los técnicos información sobre el mantenimiento del equipo.
- OM
  El Manual de funcionamiento proporciona al operador información sobre el manejo y el funcionamiento del equipo antes, durante y después de la producción.
- SPC
  El Catálogo de recambios proporciona la información necesaria para pedir las piezas de recambio a Tetra Pak.
- TeM
  El Manual técnico
  - proporciona a los técnicos la información necesaria para instalar de manera segura el equipo
  - proporciona a los técnicos información sobre el mantenimiento del equipo
  - proporciona a los técnicos información sobre el sistema eléctrico de la máquina/equipo
  - proporciona la información necesaria para pedir las piezas de recambio a Tetra Pak.

Organización de las páginas

Consultar la ilustración (A) en la página i-5: Las páginas principales en un Catálogo de recambios se componen de una página de ilustración (1) y una página de lista correspondiente (7). El número de la página (5) se muestra en el encabezado de una página de ilustración y en el pie de página de una página de lista. El número del documento (6) se muestra en el pie de página de una página de lista.

Numeración de las páginas

Consulte la ilustración (A) en la página i-5: Un número de página (5) consta de tres partes:

- número de capítulo (2)
- número de página consecutivo dentro del capítulo (3)
- número total de páginas del capítulo (4)

Introducción a la máquina

Fabricante

Para obtener el nombre y la dirección del fabricante, véase la segunda página de este catálogo.

Servicio

Para pedir recambios para esta máquina o informar de problemas asociados con el funcionamiento de la misma, póngase en contacto con la oficina de Tetra Pak más cercana.

Póngase en contacto con el representante para otras consultas, comentarios o consejos sobre mejoras referidos al equipo y su documentación.

Identificación

Clasificación de la CE

Este equipo cumple con la normativa básica sobre salud y seguridad del Espacio Económico Europeo (EEE).

Placa de máquina

La ilustración (B) en la página i-5 muestra un ejemplo de una placa de máquina.
En el capítulo Introducción de los manuales entregados con este equipo, se muestra una ilustración de la placa de máquina válida y su ubicación en el equipo. La placa de máquina contiene los datos que se enumeran a continuación, requeridos al ponerse en contacto con Tetra Pak en relación con este equipo específico.

- Tipo de máquina (8)
- Volumen (9)
- Especificaciones de plano (10)
- Número de serie de la máquina (11)
- Fabricante (12)
- Marca de la CE (13)
- Año de fabricación (14)

La ilustración (C) en la página i-5 muestra un ejemplo de especificación de la máquina. Asegúrese de que los datos de equipo que se enumeran en las páginas de la cubierta de este manual corresponden a los datos de la placa y las especificaciones de la máquina.

Cómo utilizar este Catálogo de recambios

Localizar un número de recambio

a) Consulte la ilustración (D) en la página i-5: Vaya al número de capítulo (15) indicado junto al grupo principal que contiene la pieza que desea localizar.

Los puntos b) y c) hacen referencia a la ilustración (E) en la página i-6.

b) En la ilustración del grupo principal, busque el subgrupo de la máquina (17) que contiene la pieza o el subgrupo que busca. Anote el número de posición (18) y vaya a la página de lista que sigue a la ilustración.

c) Busque el número de posición/denominación de referencia (16) o el nombre del subgrupo (19). Vaya al número de página correspondiente (20) que aparece en la columna de la derecha. Tetra Pak ha elegido utilizar siempre la estructura orientada a la función para la denominación de referencia. El prefijo que indica la estructura orientada a la función (=) no aparece en la denominación de referencia.

Los puntos d) y e) hacen referencia a la ilustración (F) en la página i-6.

d) Localice la pieza (21) que busca en la ilustración del subgrupo y anote el número de posición de la pieza.

e) El número de pieza (29) y la descripción de la misma (30) aparecen junto al número de posición en la página de lista.

Información que contiene un Catálogo de recambios

La lista que aparece a continuación hace referencia a la ilustración (F) en la página i-6. Un Catálogo de recambios contiene la siguiente información sobre grupos, subgrupos y recambios para el equipo:

- Referencia de estructura de grupo (22). Indica el siguiente grupo más alto en la estructura de lista del equipo.
- Nombre del grupo (23)
- Unidad de medida (25)
- Cantidad (26)
- Número de dibujo del conjunto (27)
- Intervalo de página de lista (28). Incluido si hay varias páginas en la ilustración o lista de grupo.
- Número de pieza o subgrupo (29)
- Nombre de subgrupo o descripción de pieza (30)
- Número de grupo (31)
- Número de equipo (32)
- Encabezado de información de grupo (33). Indica si la sección que aparece debajo del encabezado corresponde a una variante específica de la máquina o si es una lista de piezas comunes. Si la lista tiene más de una variante y cada variante tiene su propio dibujo de conjunto, se muestra una referencia de página al dibujo de conjunto de la variante.
- Información interna (34)

Sissejuhatus

Juhendi teave

Tetra Pak soovitab kõik juhendid hoolikalt läbi lugeda. Kontrollige, et juhendid oleksid seadmetega töötavatele ja neid hooldavatele isikutele kättesaadavad.

Kataloog tuleb seadme kasutusaja vältel alles hoida ning järgmisele omanikule või kasutajale edasi anda.

Tetra Pak ei vastuta seadme vigastuste eest, mis on tekkinud seadmega kaasnevate juhendite mittejärgimise tõttu.

Kaasaolevad juhendid

Seadmega kaasasolevad juhendid võivad sisaldada järgmist:

- CM
  Ümberseadistusjuhend annab tehnikutele teavet seadme ümber seadistamise kohta eri tootmisrežiimide korral.
- EM
  Elektrijuhend annab tehnikutele informatsiooni seadme elektrisüsteemi kohta.
- IM
  Paigaldusjuhend annab tehnikutele vajalikku teavet seadme ohutu paigaldamise kohta.
- MM
  Hooldusjuhend annab tehnikutele teavet seadme hoolduse kohta.
- OM
  Kasutusjuhend annab operaatorile teavet seadme käsitsemise ja kasutamise kohta enne tootmist, selle ajal ja pärast seda.
- SPC
  Varuosade kataloog annab vajalikku teavet Tetra Pakilt varuosade tellimiseks
- TeM
  Tehniline juhend
  - annab tehnikutele vajalikku teavet seadme ohutuks paigaldamiseks
  - annab tehnikutele teavet seadme hooldamise kohta
  - annab tehnikutele teavet masina/seadme elektrisüsteemi kohta
  - annab vajalikku teavet Tetra Pakilt varuosade tellimiseks.

Lehekülje kujundus

Vt joonist (A) lk i-5: Varuosade kataloogi põhilehtedeks on jooniste lehekülg (1) ja vastav loeteluleht (7). Lehekülje number (5) on toodud joonistelehe päises ja loetelulehe jaluses. Dokumendi number (6) on toodud loetelulehe jaluses.

Lehekülje nummerdus

Vt joonist (A) lk i-5: Lehekülje number (5) koosneb kolmest osast:

- peatüki number (2)
- järgneva lehekülje number (3) peatükis
- lehekülgede koguarv peatükis (4)

Sissejuhatus masina kohta

Tootja

Tootja nimi ja aadress on toodud kataloogi teisel lehel.

Teenindus

Masina varuosade tellimiseks või masina kasutamisega seonduvate probleemide teatamiseks võtke ühendust lähima Tetra Pak kontoriga.

Seadme ja dokumendiga seonduvate küsimuste, kommentaaride ja parandusettepanekute puhul võtke ühendust ettevõtte esindajaga.

Identifikatsioon

CE klassifikatsioon

Seade on kooskõlas Euroopa Majanduspiirkonna (EEA) tervishoiu- ja ohutusnõuetega.

Masina andmeplaat

Joonisel (B) leheküljel i-5 on kujutatud masina andmeplaati. Masina andmeplaadi joonis ja selle asukoht seadmel on toodud seadmega kaasasoleva juhendi sissejuhatavas peatükis. Masina andmeplaadil on toodud allpool loetletud andmed, mida vajate antud konkreetse seadmega seoses Tetra Paki poole pöördudes.

- Masina tüüp (8)
- Maht (9)
- Joonisspetsifikatsioonid (10)
- Masina seerianumber (11)
- Tootja (12)
- CE tähis (13)
- Tootmisaasta (14)

Joonisel (C) leheküljel i-5 on kujutatud näide masina spetsifikatsioonist. Veenduge, et juhendi esimestel lehekülgedel toodud andmed seadme kohta vastavad masina andmesildil olevatele andmetele ja masina spetsifikatsioonile.

Kuidas varuosade kataloogi kasutada

Leidke varuosa number

a) Vt joonist (D) lk i-5: Leidke peatükk, mille number (15) on toodud selle põhirühma juures, mis sisaldab otsitavat varuosa.

Punktid b) ja c) viitavad joonisele (E) lk i-6.

b) Põhirühma joonisel leidke masina alamrühm (17), mis sisaldab otsitavat osa või alamrühma. Leidke positsiooninumber (18) ja avage joonisele järgnev loeteluleht.

c) Leidke positsiooninumber/viite tähis (16) või alamgrupi nimetus (19). Avage parempoolses veerus loetletud vastav lehekülje number (20). Tetra Pak on valinud viite tähise puhul alatiseks kasutamiseks funktsioonile suunatud struktuuri. Funktsioonile suunatud struktuuri prefiks (=) pole viite tähises näidatud.

Punktid d) ja e) viitavad jooniselerefer (F) lk i-6.

d) Leidke otsitav osa (21) alamrühma joonisel ja seejärel osa positsioonnumber.

e) Osa number (29) ja osa kirjeldus (30) on toodud loetelulehel positsioonnumbri kõrval.

Varuosade kataloogis toodud teave

Allpool toodud loetelui viitab joonisele (F) lk i-6. Varuosade kataloog sisaldab järgmist teavet seadme rühmade, alamrühmade ja varuosade kohta:

- Rühmastruktuuri viide (22). Märgib seadme loetelu struktuuris järgmist kõrgemat rühma.
- Rühma nimetus (23)
- Mõõtühik (25)
- Kogus (26)
- Koostejoonise number (27)
- Loetelu lehekülgede vahemik (28). Kaasatud kui rühma joonised või loetelu on toodud mitmel lehel.
- Osa või alamrühma number (29)
- Alamrühma nimetus või osa kirjeldus (30)
- Rühma number (31)
- Seadme number (32)
- Rühma teabe pealkiri (33). Näitab, kas pealkirja all toodud jaotis on konkreetse masinavariandi kohta või on tegemist tavaliste varuosade loeteluga. Kui loetelus on toodud rohkem kui üks variant ja iga variandi jaoks on oma koostejoonis, esitatakse viide selle variandi koostejoonise leheküljele.
- Siseteave (34)

Johdanto

Tietoja käsikirjasta

Tetra Pak suosittelee kaikkien toimitettavien oppaiden lukemista huolellisesti. Varmista, että toimitetut oppaat ovat laitetta käyttävän tai huoltavan henkilökunnan saatavilla.

Tämä luettelo on säilytettävä laitteen käyttöiän ajan ja toimitettava edelleen mahdolliselle seuraavalle omistajalle tai käyttäjälle.

Tetra Pak ei vastaa laitevaurioista, jotka aiheutuvat laitteen mukana tulevissa oppaissa annettujen ohjeiden noudattamatta jättämisestä.

Toimitettavat ohjeet

Tämän laitteen mukana toimitettaviin ohjeisiin kuuluvat:

- CM
  Muunnoskirjassa on teknikoille tarkoitettuja ohjeita laitteiston muuttamisesta eri tuotantotiloihin.
- EM
  Sähkökirjassa on teknikoille tarkoitettuja tietoja laitteen sähköjärjestelmästä.
- IM
  Asennuskäsikirjassa on teknikoille tarkoitettuja tietoja, jotka tarvitaan laitteen turvallista asentamista varten.
- MM
  Huoltokäsikirjassa on teknikoille tarkoitettuja tietoja tämän laitteen huoltamisesta.
- OM
  Käyttäjän käsikirjassa on käyttäjälle tarkoitettuja tietoja laitteen käsittelystä ja käyttämisestä ennen tuotantoa, tuotannon aikana ja sen jälkeen.
- SPC
  Varaosaluettelossa on tietoja, joita tarvitaan varaosien tilaamiseen Tetra Pakilta.
- TeM
  Tekninen käsikirja
  - sisältää teknikoille tarkoitettuja tietoja, joita tarvitaan laitteen turvallista asentamista varten
  - sisältää teknikoille tarkoitettuja tietoja laitteen huoltamisesta
  - sisältää teknikoille tarkoitettuja tietoja koneen/laitteen sähköjärjestelmästä
  - sisältää tietoja, joita tarvitaan varaosien tilaamiseen Tetra Pakilta.

Sivujen asettelu

Katso kuva (A) sivulla i-5: Varaosaluettelon pääsivut koostuvat kuvasivusta (1) ja sitä vastaavasta luettelosivusta (7). Sivunumero (5) näytetään kuvasivun ylätunnisteessa ja luettelosivun alatunnisteessa. Asiakirjan numero (6) näytetään luettelosivun alatunnisteessa.

Sivunumerointi

Katso kuva (A) sivulla i-5: Sivunumerossa (5) on kolme osaa:

- luvun numero (2)
- perättäinen sivunumero (3) luvun sisällä
- luvun kokonaissivumäärä (4).

Koneen esittely

Valmistaja

Valmistajan nimi ja osoite on ilmoitettu tämän luettelon toisella sivulla.

Huolto

Jos haluat tilata tähän koneeseen varaosia tai jos tämän koneen käytössä ilmenee ongelmia, jotka haluat raportoida, ota yhteyttä lähimpään Tetra Pakin toimistoon.

Jos sinulla on muuta kysyttävää, huomautettavaa tai ehdotuksia ja sen asiakirjoja koskevista parannuksista, ota yhteys yhteyshenkilöön.

Tunnistetiedot

CE-luokitus

Tämä laite vastaa Euroopan talousalueen (ETA) terveyttä ja turvallisuutta koskevia perusvaatimuksia.

Koneen tyyppikilpi

Kuvassa (B) sivulla i-5 on esimerkki koneen tyyppikilvestä. Voimassa olevan tyyppikilven kuva ja sen sijainti koneessa käy ilmi laitteiston mukana tulleiden ohjeiden Johdanto-luvusta. Tyyppikilvessä on tarvitsemasi Tetra Pakin voimassa olevat yhteystiedot, kun on kyseessä tämä nimenomainen laite.

- Konetyyppi (8)
- Tilavuus (9)
- Piirustuserittely (10)
- Koneen sarjanumero (11)
- Valmistaja (12)
- CE-merkki (13)
- Valmistusvuosi (14)

Kuvassa (C) sivulla i-5 on esimerkki koneen erittelystä. Varmista, että tämän ohjeen etusivuilla ilmoitetut laitetiedot vastaavat tyyppikilven ja kone-erittelyn tietoja.

Tämän varaosaluettelon käyttäminen

Etsi varaosan numero

a) Katso kuva (D) sivulla i-5: Siirry lukuun (15), joka on ilmoitettu etsittävän osan pääryhmän vieressä.

Kohdat b) ja c) viittaavat kuvaan (E) sivulla i-6.

b) Etsi pääryhmän kuvasta koneen alaryhmä (17), joka sisältää etsimäsi osan tai alaryhmän. Merkitse muistiin paikkanumero (18) ja siirry luettelosivulle, joka seuraa kuvaa.

c) Etsi paikkanumero (16) tai alaryhmän nimi (19). Siirry vastaavalle sivunumerolle (20), joka on ilmoitettu oikeassa sarakkeessa. Tetra Pak on päättänyt aina noudattaa toimintoperusteista rakennetta viitemerkinnöissä. Viitemerkinnässä ei esitetä toimintoperusteisen rakenteen osoittavaa etuliitettä (=).

Kohdat d) ja e) viittaavat kuvaan (F) sivulla i-6.

d) Hae etsittävä osa (21) alaryhmän kuvasta ja merkitse osan paikkanumero muistiin.

e) Osanumero (29) ja osan kuvaus (30) on annettu paikkanumeron vieressä luettelosivulla.

Varaosaluettelossa olevat tiedot

Alla oleva luettelo viittaa kuvaan (F) sivulla i-6. Varaosaluettelo sisältää seuraavat tiedot ryhmistä, alaryhmistä ja laitteen varaosista:

- Ryhmärakenneviite (22). Osoittaa seuraavaksi ylemmän ryhmän laiteluettelorakenteessa.
- Ryhmän nimi (23)
- Mittayksikkö (25)
- Määrä (26)
- Kokoonpanopiirustuksen numero (27)
- Luettelon sivualue (28). Tämä on mukana, jos ryhmäkuvassa tai luettelossa on useita sivuja.
- Osan tai alaryhmän numero (29)
- Alaryhmän nimi tai osan kuvaus (30)
- Ryhmän numero (31)
- Laitteen numero (32)
- Ryhmätietojen otsikko (33). Osoittaa, koskeeko alla oleva osio tiettyä koneversiota vai onko kyseessä yhteisten osien luettelo. Jos luettelolla on useampi kuin yksi versio ja kullakin versiolla on oma kokoonpanopiirustuksensa, näytetään version kokoonpanopiirustuksen sivuviittaus.
- Sisäiset tiedot (34)

Introduction

Informations sur ce manuel

Tetra Pak recommande de lire attentivement tous les manuels remis. S'assurer que ceux-ci sont accessibles au personnel d'exploitation et de maintenance de l'équipement.

Il est important de conserver ce catalogue pendant la durée de vie de l'équipement et de le transmettre à tout détenteur ou à tout utilisateur ultérieur de l'équipement.

Tetra Pak ne pourra être tenu responsable d'aucun dommage causé à l'équipement suite au non respect des instructions fournies dans les manuels remis avec cet équipement.

Manuels remis

Les manuels remis avec cet équipement peuvent comprendre

- CM
  Le Manuel de Conversion contient les informations destinées aux techniciens pour la conversion de l'équipement en vue des différents modes de production.
- EM
  Le Manuel Electrique fournit aux techniciens des informations sur le système électrique de l'équipement.
- IM
  Le Manuel d'Installation fournit les informations nécessaires aux techniciens pour installer l'équipement en toute sécurité.
- MM
  Le Manuel d'Entretien contient les informations nécessaires aux techniciens pour la maintenance de l'équipement.
- OM
  Le Manuel d'Utilisation fournit à l'opérateur les informations nécessaires à la manutention et à l'exploitation de l'équipement, avant, pendant et après la production.
- SPC
  Le Catalogue des Pièces de Rechange contient les informations permettant de commander des pièces de rechange auprès de Tetra Pak
- TeM
  Le Manuel Technique
  - contient les informations nécessaires aux techniciens pour installer l'équipement en toute sécurité.
  - contient les informations nécessaires aux techniciens pour la maintenance de l'équipement.
  - fournit aux techniciens des informations sur le système électrique de la machine/de l'équipement.
  - fournit les informations permettant de commander des pièces de rechange auprès de Tetra Pak.

Mise en page

Reportez-vous au schéma (A) page i-5 : Dans un catalogue de Pièces de Rechange, les pages principales sont les pages de schémas (1) et les pages de listes correspondantes (7). Le numéro de page (5) est indiqué en en-tête sur une page de schéma et en bas de page sur une page de liste. Le numéro de document (6) est indiqué au bas d'une page de liste.

Numérotation des pages

Reportez-vous au schéma (A) page i-5 : Un numéro de page (5) se compose de trois éléments :

- numéro du chapitre (2)
- numéro de page séquentiel à l'intérieur du chapitre (3)
- nombre total de pages du chapitre (4)

Présentation de la machine

Fabricant

Les nom et adresse du fabricant sont donnés en deuxième page de ce catalogue.

Assistance technique

Pour commander des pièces de rechange pour cette machine ou signaler un problème lié à son fonctionnement, contactez l'agence Tetra Pak la plus proche.

Contactez le responsable de liaison pour tout autre renseignement, commentaire ou suggestion d'amélioration relatifs à l'équipement et à sa documentation.

Identification

Certification CE

Cet équipement est conforme aux réglementations essentielles en matière d'hygiène et de sécurité de l'Espace économique européen (EEE).

Plaque signalétique de la machine

Le schéma (B) de la page i-5 reproduit un exemple de plaque signalétique de la machine.
Le chapitre Introduction des manuels remis avec cet équipement comprend une reproduction de la plaque signalétique valide de la machine et indique son emplacement sur l'équipement. La plaque comporte les caractéristiques indiquées ci-dessous, nécessaires pour prendre contact avec Tetra Pak à propos de cet équipement spécifique.

- Type de la machine (8)
- Volume (9)
- Caractéristiques schéma (10)
- Numéro de série de la machine (11)
- Fabricant (12)
- Marquage CE (13)
- Année de fabrication (14)

Le schéma (C) de la page i-5 reproduit un exemple de plaque signalétique de la machine. Assurez-vous que les données relatives à l'équipement qui se trouvent au début de ce manuel correspondent bien aux données figurant sur la plaque signalétique de la machine et à ses spécifications.

Comment utiliser ce Catalogue des Pièces de Rechange

Trouver un numéro de pièce de rechange

a) Reportez-vous au schéma (D) page i-5 : Allez au numéro de chapitre (15) indiqué à côté du groupe principal contenant la pièce que vous recherchez.

Les éléments b) et c) se rapportent au schéma (E) de la page i-6.

b) Sur le schéma du groupe principal, recherchez le sous-groupe de la machine (17) contenant la pièce ou le sous-groupe que vous recherchez. Notez le numéro de position (18) et reportez-vous à la page de liste suivant le schéma.

c) Recherchez le numéro de position/la désignation de référence (16) ou le nom du sous-groupe (19). Allez au numéro de page correspondant (20) figurant dans la liste de la colonne de droite. Tetra Pak a pris le parti de toujours utiliser la structure de la fonction pour la désignation de la référence. Le préfixe indiquant la structure de la fonction (=) ne figure pas dans la désignation de la référence.

Les éléments d) et e) se rapportent au schéma (F) de la page i-6.

d) Repérez la pièce (21) que vous recherchez dans le schéma du sous-groupe et notez le numéro de position de la pièce.

e) Le numéro de la pièce (29) et sa description (30) figurent à côté du numéro de position sur la page de liste.

Informations données dans un Catalogue de Pièces de Rechange

La liste ci-dessous se rapporte au schéma (F) de la page i-6. Un Catalogue de Pièces de Rechange contient les informations suivantes concernant les groupes, sous-groupes et pièces de rechange de l'équipement :

- Référence de structure de groupe (22). Indique le groupe immédiatement supérieur dans la structure de liste de l'équipement.
- Nom du groupe (23)
- Unité de mesure (25)
- Quantité (26)
- Numéro de plan de montage (27)
- Groupe de pages de liste (28). Indiqué si la liste ou l'illustration du groupe comporte plusieurs pages.
- Numéro de pièce ou de sous-groupe (29)
- Nom du sous-groupe ou description de la pièce (30)
- Numéro de groupe (31)
- Numéro de l'équipement (32)
- Titre information du groupe (33) Indique si la section en-dessous du titre est destinée à une variante spécifique de la machine ou s'il s'agit d'une liste de pièces communes. Si une liste comprend plus d'une variante et que chaque variante a son propre plan de montage, une référence de page est donnée pour le plan de montage de la variante.
- Information interne (34)

Bevezetés

Kézikönyvre vonatkozó információk

A Tetra Pak javasolja, hogy az összes kapott kézikönyvet gondosan olvassa el. Gondoskodjon róla, hogy a kézikönyvek a berendezést üzemeltető és karbantartó személyzet számára elérhetők legyenek.

Fontos, hogy megőrizzék ezt a katalógust a berendezés élettartama alatt, és átadják a következő tulajdonosoknak és felhasználóknak.

A Tetra Pak nem vállal felelősséget a berendezés semmilyen megrongálódása esetén, ha nem követték a berendezéshez tartozó kézikönyvekben leírt utasításokat.

Szállított kézikönyvek

A berendezéssel szállított kézikönyvek az alábbiak lehetnek

- CM
  Az Átállási kézikönyv a műszaki szakemberek számára a berendezés különböző gyártási módjai közötti átállásra vonatkozó információkat tartalmaz.
- EM
  A Villamossági kézikönyv a berendezés elektronikai rendszerére vonatkozó információkat szolgáltat a műszaki szakemberek részére.
- IM
  Az Üzembe helyezési kézikönyv a berendezés biztonságos üzembe helyezésére vonatkozó információkat biztosít a technikai szakemberek részére.
- MM
  A Karbantartási kézikönyv a berendezés karbantartására vonatkozó információkat biztosít a technikai szakemberek részére.
- OM
  Az Üzemeltetési kézikönyv az üzemeltető személyzetnek szolgáltat a berendezés kezelésére és üzemeltetésére, a feldolgozás előtti, közbeni és utáni teendőkre vonatkozó információkat.
- SPC
  A Tartalékalkatrész-katalógus információt biztosít a pótalkatrészek Tetra Pak-tól történő megrendeléséhez.
- TeM
  A Technikai kézikönyv
  – a berendezés biztonságos üzembe helyezésére vonatkozó információkat biztosít a technikai szakemberek részére.
  – a berendezés karbantartására vonatkozó információkat biztosít a technikai szakemberek részére.
  – a gép/berendezés elektromos rendszerére vonatkotó információkat szolgáltat a technikai szakemberek számára.
  – információkat biztosít a pótalkatrészek Tetra Pak-tól történő megrendeléséhez.

Oldalelrendezés

Tekintse meg az i-5 oldalon lévő (A) ábrát: A Tartalékalkatrész-katalógus főoldalai egy rajzoldalból (1) és egy hozzá tartozó listaoldalból (7) állnak. Az oldalszám (5) a rajzoldal fejlécében és a listaoldal láblécében látható. A dokumentum száma (6) a listaoldal láblécében jelenik meg.

Oldalszámozás

Tekintse meg az i-5 oldalon lévő (A) ábrát: Az oldalszám (5) három részből áll:

- fejezetszám (2)
- folyamatos oldalszám (3) a fejezeten belül
- összes oldalszám (4) a fejezeten belül.

Bevezetés

Gyártó

A gyártó neve és címe a katalógus második oldalán található.

Szerviz

A gép valamely pótalkatrészének megrendelése vagy a berendezés működésével kapcsolatos zavarok bejelentése végett forduljon a legközelebbi Tetra Pak képviselethez.

Bármilyen más, a berendezésre illetve a dokumentációra vonatkozó kérdéseivel, megjegyzéseivel vagy javaslataival forduljon területi képviselőjéhez.

Azonosítás

CE besorolás

Ez a berendezés megfelel az Európai Gazdasági Régió (EEA) alapvető egészségügyi és biztonsági előírásainak.

Gépcímke

A(z) i-5 oldalon található (B) ábra a gépcímke egy példáját mutatja be. Egy érvényes gépcímkét és megfelelő elhelyezését ábrázoló rajz látható a berendezéssel szállított kézikönyv Bevezetés fejezetében. A gépcímke azokat az alább felsorolt adatokat tartalmazza, amelyek a Tetra Pak-kal történő, a berendezésre vonatkozó kommunikációhoz szükségesek.

- Géptípus (8)
- Térfogat (9)
- Tervrajzok (10)
- A gép sorozatszáma (11)
- Gyártó (12)
- CE jelzés (13)
- Gyártási év (14)

A(z) i-5 oldalon található (C) ábra a gép műszaki specifikációjának egy példáját mutatja be. Győződjön meg róla, hogy a kézikönyv első lapjain közölt berendezésadatok megegyeznek a gép adattábláján és a gép műszaki leírásában megjelenő információkkal.

A Tartalékalkatrész-katalógus használata

A tartalékalkatrész számának kikeresése

a) Tekintse meg a(z) i-5 oldalon lévő (D) ábrát: Lapozzon a keresett alkatrészt tartalmazó főcsoport mellett feltüntetett (15) számú fejezetre.

A b) és c) elemek az i-6 oldalon található ábrára vonatkoznak.

b) A főcsoport-ábrán keresse meg azt az alcsoportot (17), amelyik a keresett alkatrészt vagy alcsoportot tartalmazza. Jegyezze meg a pozíciószámot (18), majd lapozzon az ábrát követő listaoldalra.

c) Keresse meg a lejegyzett pozíciószámot/hivatkozási megjelölést (16) vagy a keresett alcsoport nevét (19). Lapozzon a jobb oldali oszlopban feltüntetett számú (20) oldalra. A Tetra Pak a hivatkozási jelöléseket mindig funkció-orientált struktúra alapján végzi el. Az előtaggal jelölt funkció-orientált struktúra (=) nem jelenik meg a hivatkozási jelölésben.

A d) és e) elemek az i-6 oldalon található (F) ábrára vonatkoznak.

d) Az alcsoport ábrán keresse meg a kívánt alkatrészt (21), és jegyezze meg az alkatrész pozíciószámát.

e) Az alkatrész száma (29) és leírása (30) a listaoldalon, a pozíciószám mellett látható.

A Tartalékalkatrész-katalógusban megtalálható információk

Az alábbi lista az i-6 oldalon található (F) ábrára vonatkozik.
A Tartalékalkatrész-katalógus a következő, csoportokra, alcsoportokra és pótalkatrészekre vonatkozó adatokat tartalmazza:

- Csoportstruktúra-hivatkozás (22). A berendezés listás struktúrájában közvetlenül az aktuális csoport fölött álló csoportot jelöli.
- Csoportnév (23)
- Mértékegység (25)
- Mennyiség (26)
- Összeszerelési rajzszám (27)
- Lista oldaltartománya (28). Abban az esetben jelenik meg, ha a csoport ábrája vagy listája többoldalas.
- Alkatrész vagy alcsoport száma (29)
- Alcsoport neve vagy alkatrész leírása (30)
- Csoportszám (31)
- Berendezésszám (32)
- Csoportinformáció fejléce (33). Azt mutatja, hogy a fejléc után következő rész egy speciális gépváltozatra vonatkozik vagy az általános pótalkatrészek listája. Ha a listának több változata van, és mindegyikhez saját összeszerelési rajz tartozik, az illető összeszerelési rajz oldalhivatkozása is megjelenik.
- Belső információ (34)

Inngangur

Upplýsingar um handbók

Tetra Pak mælir með því að allar handbækur sem afhentar eru séu lesnar vandlega. Gætið þess að afhentar handbækur séu tiltækar fyrir starfsfólk sem vinnur við eða viðheldur tækjabúnaðinum.

Það er mikilvægt að halda upp á þennan vörulista allan líftíma tækjabúnaðarins og að láta síðari eiganda eða notanda hafa vörulistann.

Ekki er hægt að gera Tetra Pak ábyrgt fyrir neinum skemmdum sem verða á tækjabúnaðinum vegna þess að ekki er farið eftir leiðbeiningunum í þeim handbókum sem fylgja tækjabúnaðinum.

Afhentar handbækur

Handbækur sem afhentar eru með þessum tækjabúnaði geta verið

- CM
  Breytingahandbók, sem veitir tæknimönnum upplýsingar um breytingar á tækjabúnaðinum milli mismunandi framleiðsluhama.
- EM
  Rafmagnshandbók, sem veitir tæknimönnum upplýsingar um rafkerfi tækjabúnaðarins.
- IM
  Uppsetningarhandbók, sem veitir tæknimönnum nauðsynlegar upplýsingar til að setja tækjabúnaðinn upp á öruggan hátt.
- MM
  Viðhaldshandbók, sem eitir tæknimönnum upplýsingar um viðhald tækjabúnaðarins.
- OM
  Notkunarhandbók, sem veitir stjórnandanum upplýsingar um meðhöndlun og notkun tækjabúnaðarins, fyrir, eftir og meðan á framleiðslu stendur.
- SPC
  Varahlutavörulisti, sem veitir nauðsynlegar upplýsingar til pöntunar varahluta frá Tetra Pak.
- TeM
  Tæknihandbók
  - sem veitir tæknimönnum nauðsynlegar upplýsingar til að setja tækjabúnaðinn upp á öruggan hátt
  - sem veitir tæknimönnum upplýsingar um viðhald tækjabúnaðarins
  - sem veitir tæknimönnum upplýsingar um rafkerfi vélarinnar/ tækjabúnaðarins
  - sem veitir nauðsynlegar upplýsingar til pöntunar varahluta frá Tetra Pak.

Umbrot

Sjá skýringarmynd (A) á síðu i-5: Aðalsíðurnar í Varahlutavörulistanum samanstanda af skýringarsíðu (1) og samsvarandi listasíðu (7). Síðunúmerið (5) er sýnt í haus síðunnar með skýringarmyndinni og í fæti listasíðunnar. Skjalnúmerið (6) er sýnt í fæti listasíðunnar.

Númerun síðu

Sjá skýringarmynd (A) á síðu i-5: Síðunúmer (5) er í þremur hlutum:

- kaflanúmer (2)
- samfellt síðunúmer innan kaflans (3)
- heildarfjölda blaðsíðna í kaflanum (4)

Kynning á vél

Framleiðandi

Fyrir nafn og heimilisfang framleiðanda, sjá síðu tvö í þessum vörulista.

Þjónusta

Til að panta varahluti fyrir þessa vél, eða til að tilkynna vandamál sem tengjast notkun þessarar vélar, skal hafa samband við næstu Tetra Pak skrifstofu.

Hafðu samband við Samskiptatengsl með aðrar fyrirspurnir, athugasemdir eða uppástungur varðandi tækjabúnaðinn og fylgiskjöl hans.

Kennsl

CE flokkun

Þessi tækjabúnaður er í samræmi við grundvallar heilbrigðis- og öryggisreglugerðir á Evrópska efnahags svæðinu (EES).

Nafnplata

Skýringarmynd (B) á síðu i-5 sýnir dæmi um nafnplötu.
Skýringarmynd af gildri nafnplötu og staðsetningu hennar á tækjabúnaðinum er sýnd í Inngangskafla handbókanna sem afhentar eru með þessum tækjabúnaði. Á nafnplötunni eru upplýsingarnar sem taldar eru upp hér að neðan, sem þörf er á þegar haft er samband við Tetra Pak varðandi þennan tiltekna tækjabúnað.

- Vélartegund (8)
- Fjöldi (9)
- Teikniupplýsingar (10)
- Raðnúmer vélar (11)
- Framleiðandi (12)
- CE merki (13)
- Framleiðsluár (14)

Skýringarmynd (C) á síðu i-5 sýnir dæmi um tæknilýsingu vélar. Gættu þess að upplýsingar um tækjabúnað sem talinn er upp á fremstu síðum þessarar handbóka samsvari upplýsingum á nafnplötu og tæknilýsingu vélar.

Hvernig nota á þennan Varahlutavörulista

Finndu varahlutarnúmer

a) Sjá skýringarmynd (D) á síðu i-5: Farðu í kaflanúmerið (15) sem gefið er til kynna við hlið aðalflokksins sem inniheldur hlutinn sem þú vilt finna.

Atriði b) og c) vísa til skýringarmyndar (E) á síðu i-6:

b) Á skýringarmynd aðalflokksins skaltu leita að undirflokki (17) vélarinnar, sem inniheldur hlutinn eða undirflokkinn sem þú ert að leita að. Taktu eftir stöðunúmerinu (18) og farðu á listasíðuna sem fylgir skýringarmyndinni.

c) Leitaðu að stöðunúmeri/tilvísunartitli (16) eða heiti undirflokksins (19). Farðu á samsvarandi síðunúmer (20) sem sýnt er í hægri dálkinum. Tetra Pak hefur kosið að nota alltaf sérhæfða skipan fyrir tilvísunartitla. Forskeytið sem gefur til kynna sérhæfða skipan (=) er ekki sýnt í tilvísunartitlinum.

Atriði d) og e) vísa til skýringarmyndar (F) á síðu i-6:

d) Finndu hlutinn (21) sem þú ert að leita að á undirflokksskýringarmyndinni og taktu eftir stöðunúmeri hlutarins.

e) Hlutarnúmerið (29) og lýsing hlutar (30) eru skráð hjá stöðunúmerinu á listasíðunni.

Upplýsingar skráðar í Varahlutavörulista

Listinn að neðan vísar til skýringarmyndar (F) á síðu i-6: Varahlutavörulisti inniheldur eftirfarandi upplýsingar um flokka, undirflokka og varahluti fyrir tækjabúnaðinn:

- Tilvísun flokkaskipunar (22). Gefur til kynna næsta flokk fyrir ofan í listaskipan tækjabúnaðarins.
- Heiti flokks (23)
- Mælieining (25)
- Magn (26)
- Númer samsetningarteikningar (27)
- Röð listasíðu (28). Fylgir með ef það eru margar blaðsíður í skýringarmynd eða lista flokksins.
- Númer hlutar eða undirflokks (29)
- Heiti undirflokks eða lýsing hlutar (30)
- Númer flokks (31)
- Númer tækjabúnaðar (32)
- Fyrirsögn flokkaskipunar (33). Gefur til kynna ef kaflinn fyrir neðan fyrirsögnina er fyrir sérstakt afbrigði vélar eða ef hann er listi yfir algenga hluti. Ef listi er með meira en eitt afbrigði og hvert afbrigði á sína eigin samsetningarteikningu, er sýnd blaðsíðutilvísun til samsetningarteikningar afbrigðisins.
- Innri upplýsingar (34)

Introduzione

Informazioni sul manuale

Tetra Pak consiglia di leggere con attenzione tutti i manuali forniti in dotazione. Assicurarsi che tutti i manuali in dotazione siano disponibili per il personale addetto al funzionamento o alla manutenzione della macchina.

È importante conservare il presente catalogo per tutta la durata della macchina e consegnarlo al successivo proprietario o utilizzatore.

Tetra Pak non sarà da ritenersi responsabile per eventuali danni alla macchina causati dal mancato rispetto delle istruzioni fornite nei manuali che accompagnano questa macchina.

Manuali in dotazione

I manuali consegnati con la presente macchina possono comprendere:

- CM (Manuale di conversione)
  Questo manuale fornisce ai tecnici le informazioni necessarie per la conversione della macchina da una modalità di produzione a un'altra.
- EM (Manuale elettrico)
  Questo manuale fornisce ai tecnici informazioni sull'impianto elettrico della macchina.
- IM (Manuale d'installazione)
  Questo manuale fornisce ai tecnici le informazioni necessarie per installare in sicurezza la macchina.
- MM (Manuale di manutenzione)
  Questo manuale fornisce ai tecnici le informazioni sulla manutenzione della macchina.
- OM (Manuale operativo)
  Questo manuale fornisce all'operatore le informazioni sull'utilizzo e il funzionamento della macchina prima, durante e dopo la produzione.
- SPC (Catalogo dei pezzi di ricambio)
  Questo catalogo fornisce le informazioni necessarie per ordinare i pezzi di ricambio a Tetra Pak.
- TeM (Manuale tecnico)
  Questo manuale:
  - fornisce ai tecnici le informazioni necessarie per installare in sicurezza la macchina
  - fornisce ai tecnici le informazioni sulla manutenzione della macchina
  - fornisce ai tecnici informazioni sull'impianto elettrico della macchina
  - fornisce le informazioni necessarie per ordinare i pezzi di ricambio a Tetra Pak.

Schema delle pagine

Consultare la figura (A) a pagina i-5: Le pagine principali di un Catalogo dei pezzi di ricambio sono costituite da una pagina con la figura (1) e una pagina elenco corrispondente (7). Il numero di pagina (5) è indicato nell'intestazione delle pagine con le figure e nel piè di pagina delle pagine elenco. Il codice del documento (6) è indicato nel piè di pagina delle pagine elenco.

Numerazione delle pagine

Consultare la figura (A) a pagina i-5: Il numero di pagina (5) è suddiviso in tre parti:

- numero del capitolo (2)
- numero progressivo di pagina all'interno del capitolo (3)
- numero totale di pagine nel capitolo (4)

Introduzione alla macchina

Fabbricante

Il nome e l'indirizzo del fabbricante sono riportati sulla seconda pagina del presente catalogo.

Assistenza

Per ordinare i pezzi di ricambio per questa macchina oppure per riferire problemi associati al funzionamento della macchina, contattare l'ufficio Tetra Pak più vicino.

Per tutte le altre richieste, commenti o suggerimenti per eventuali miglioramenti da apportare alla macchina e alla relativa documentazione, contattare il responsabile di collegamento.

Identificazione

Classificazione CE

Questa macchina è conforme alle principali norme sanitarie e di sicurezza dell'Area Economica Europea (EEA).

Targhetta della macchina

La figura (B) a pagina i-5 mostra un esempio di targhetta della macchina. Il capitolo Introduzione di tutti i manuali consegnati con la presente macchina contiene invece la figura della targhetta della macchina valida e la sua posizione sulla macchina. La targhetta riporta i dati elencati qui sotto, che sono necessari per contattare Tetra Pak in relazione a questa macchina specifica.

- Tipo di macchina (8)
- Volume (9)
- Specifiche disegno (10)
- Numero di matricola della macchina (11)
- Fabbricante (12)
- Marchio CE (13)
- Anno di fabbricazione (14)

La figura (C) a pagina i-5 mostra un esempio delle specifiche di una macchina. Verificare che i dati relativi alla macchina elencati nelle pagine iniziali del presente manuale corrispondano ai dati riportati sulla targhetta della macchina e nelle specifiche della macchina.

Come usare questo Catalogo dei pezzi di ricambio

Individuare il numero del pezzo di ricambio

a) Consultare la figura (D) a pagina i-5: andare al numero del capitolo (15) indicato accanto al gruppo principale che contiene il pezzo che si desidera individuare.

I punti b) e c) fanno riferimento alla figura (E) a pagina i-6.

b) Nella figura del gruppo principale, identificare il sottogruppo della macchina (17) che contiene il pezzo o il sottogruppo cercato. Annotare il numero di posizione (18) e andare alla pagina elenco che segue la figura.

c) Identificare il numero di posizione/l'indicazione di riferimento (16) o il nome del sottogruppo (19). Andare al numero di pagina corrispondente (20) indicato nella colonna di destra. Per le indicazioni di riferimento, Tetra Pak ha scelto di usare sempre la struttura "function-oriented". Il prefisso che indica la struttura "function-oriented" (=) non è mostrato nell'indicazione di riferimento.

I punti d) e e) fanno riferimento alla figura (F) a pagina i-6.

d) Individuare il pezzo (21) cercato sulla figura del sottogruppo e annotare il numero di posizione del pezzo.

e) Il numero del pezzo (29) e la descrizione del pezzo (30) sono indicati accanto al numero di posizione sulla pagina elenco.

Informazioni contenute nel Catalogo dei pezzi di ricambio

L'elenco seguente fa riferimento alla figura (F) a pagina i-6. Il Catalogo dei pezzi di ricambio contiene le seguenti informazioni sui gruppi, i sottogruppi e i pezzi di ricambio della macchina:

- Riferimento struttura gruppo (22). Indica il gruppo superiore successivo nella struttura elenco della macchina.
- Nome gruppo (23)
- Unità di misura (25)
- Quantità (26)
- Numero disegno di assemblaggio (27)
- Intervallo delle pagine elenco (28). Questa informazione è presente se la figura o l'elenco relativi al gruppo occupano più di una pagina del manuale.
- Numero pezzo o sottogruppo (29)
- Nome sottogruppo o descrizione pezzo (30)
- Numero gruppo (31)
- Numero macchina (32)
- Intestazione informazioni gruppo (33). Indica se la sezione che segue l'intestazione si riferisce a una variante di macchina specifica oppure se si tratta di un elenco di parti comuni. Se un elenco contiene più di una variante ed esiste un disegno di assemblaggio specifico per ogni variante, viene fornito il riferimento alla pagina in cui è mostrato il disegno di assemblaggio relativo alla variante.
- Informazioni interne (34)

Įvadas

Informacija apie instrukciją

"Tetra Pak" rekomenduoja atidžiai perskaityti visas pateiktas instrukcijas. Pasirūpinkite, kad instrukcijos būtų prieinamos darbuotojams, kurie eksploatuoja arba prižiūri įrangą.

Svarbu šį katalogą išsaugoti visą įrangos tarnavimo laiką ir perduoti jį kitam įrangos savininkui arba naudotojui.

"Tetra Pak" neprisiima atsakomybės už įrangos sugadinimą, jei nesilaikoma nurodymų, pateiktų prie šios įrangos pridedamuose kataloguose.

Pateikiamos instrukcijos

Su šia įranga pateikiamose instrukcijose gali būti

- CM
  Transformacijos instrukcija, suteikianti technikams informaciją apie įrangos transformavimą skirtingiems gamybos režimams.
- EM
  Elektrinės dalies instrukcija, suteikianti technikams informaciją apie įrangos elektros sistemą.
- IM
  Įrengimo instrukcija, suteikianti technikams informaciją, reikalingą norint saugiai sumontuoti įrangą.
- MM
  Techninės priežiūros instrukcija, suteikianti technikams informaciją apie įrangos priežiūrą.
- OM
  Eksploatavimo instrukcijos paskirtis yra suteikti informaciją operatoriui, kaip naudoti ir valdyti įrangą prieš gamybos procesą, jo metu ir po jo.
- SPC
  Atsarginių dalių katalogas, kuriame yra informacija, reikalinga atsarginėms dalims iš "Tetra Pak" užsakyti
- TeM
  Techninė instrukcija
  – suteikia technikams informaciją, reikalingą saugiai sumontuoti įrangą
  – suteikia technikams informaciją apie įrangos priežiūrą
  – suteikia technikams informaciją apie įrangos elektros sistemą
  – suteikia informaciją, reikalingą užsakyti iš "Tetra Pak" atsargines dalis

Puslapių išdėstymas

Žr. paveikslėlį (A) puslapyje i-5. Pagrindiniai atsarginių dalių katalogo puslapiai sudaryti iš paveikslėlio puslapio (1) ir atitinkamo sąrašo puslapio (7). Puslapio numeris (5) nurodomas paveikslėlio puslapio viršuje ir sąrašo puslapio apačioje. Dokumento numeris (6) nurodomas sąrašo puslapio apačioje.

Puslapių numeravimas

Žr. iliustraciją (A) puslapyje i-5. Puslapio numerį (5) sudaro trys dalys:

- skyriaus numeris (2)
- puslapio eilės numeris (3) skyriuje
- bendras puslapių skaičius (4) skyriuje

Įrenginio pristatymas

Gamintojas

Gamintojo pavadinimas ir adresas pateikti antrajame šio katalogo puslapyje.

Aptarnavimas

Jei reikia šiai įrangai užsakyti atsarginių dalių arba pranešti apie jos eksploatavimo nesklandumus, kreipkitės į artimiausią "Tetra Pak" biurą.

Su kitais klausimais, pastabomis ar įrangos ir jos dokumentacijos tobulinimo pasiūlymais kreipkitės į savo kontaktinį asmenį.

Identifikavimas

CE klasifikacija

Šis įrenginys atitinka esminius Europos ekonominės erdvės (EEE) sveikatos ir saugumo reikalavimus.

Vardinė plokštelė

Puslapyje i-5 pateiktame paveikslėlyje (B) parodytas įrangos vardinės plokštelės pavyzdys.
Atitinkamos įrangos vardinė plokštelė ir jos vieta ant įrangos parodoma su šia įranga pateikiamų instrukcijų įvade. Įrangos vardinėje plokštelėje pateikiami žemiau nurodyti duomenys, kurie reikalingi kreipiantis į "Tetra Pak" dėl konkretaus įrenginio.

- Mašinos tipas (8)
- Tomas (9)
- Brėžinių specifikacijos (10)
- Įrangos serijos numeris (11)
- Gamintojas (12)
- CE ženklas (13)
- Pagaminimo metai (14)

Paveikslėlyje (C) puslapyje i-5 parodytas įrangos specifikacijos pavyzdys. Patikrinkite, ar šios instrukcijos pirmuosiuose puslapiuose nurodyti duomenys atitinka duomenis vardinėje plokštelėje ir įrangos specifikaciją.

Kaip naudotis atsarginių dalių katalogu

Atsarginės dalies numerio suradimas

a) Žr. iliustraciją (D) puslapyje i-5. Atsiverskite skyrių (15), nurodytą šalia pagrindinio mazgo, kuriame yra jūsų ieškoma dalis.

Punktai b) ir c) atitinka paveikslėlį (E) puslapyje i-6.

b) Pagrindinio mazgo paveikslėlyje suraskite smulkesnį įrangos mazgą (17), kuriame yra jūsų ieškoma dalis arba mazgas. Pasižiūrėkite pozicijos numerį (18) ir suraskite jį toliau pateiktame sąraše.

c) Suraskite pozicijos numerį/pavadinimą (16) arba smulkesnio mazgo pavadinimą (19). Atsiverskite dešiniajame stulpelyje nurodytą puslapį (20). "Tetra Pak" nusprendė pavadinimuose visada naudoti paskirtį atitinkančią struktūrą. Pavadinimuose nepateikiamas paskirtį atitinkančios struktūros prefiksas (=).

Punktai d) ir e) atitinka paveikslėlį (F) puslapyje i-6.

d) Suraskite ieškomą dalį (21) smulkesnio mazgo paveikslėlyje ir pasižiūrėkite dalies pozicijos numerį.

e) Dalies numeris (29) ir dalies aprašymas (30) sąrašo puslapyje nurodyti šalia pozicijos numerio.

Atsarginių dalių kataloge pateikiama informacija

Žemiau pateiktas sąrašas atitinka paveikslėlį (F) puslapyje i-6. Atsarginių dalių kataloge apie įrangos mazgus, smulkesnius mazgus ir atsargines dalis pateikiama tokia informacija:

- Struktūrinė mazgo nuoroda (22). Nurodo stambesnį mazgą įrangos sąrašo struktūroje.
- Mazgo pavadinimas (23)
- Matavimo vienetai (25)
- Kiekis (26)
- Surinkimo brėžinio numeris (27)
- Sąrašo puslapių intervalas (28) Pateikiamas, jei mazgo paveikslėlis arba sąrašas užima kelis puslapius.
- Dalies arba smulkesnio mazgo numeris (29)
- Smulkesnio mazgo arba dalies aprašymas (30)
- Mazgo numeris (31)
- Įrangos numeris (32)
- Informacijos apie mazgą puslapio antraštė (33). Nurodo, ar po antrašte pateikta informacija yra specifinio įrangos varianto, ar tai paprastų dalių sąrašas. Jei yra daugiau kaip vienas sąrašo variantas ir kiekvienam variantui yra atskiras surinkimo brėžinys, nurodomas puslapis, kuriame pateiktas konkretaus varianto surinkimo brėžinys.
- Vidinė informacija (34)

Ievads

Informācija par rokasgrāmatu

Tetra Pak iesaka rūpīgi izlasīt visas piegādātās rokasgrāmatas. Jānodrošina, lai piegādātas rokasgrāmatas būtu pieejamas personālam, kas apkalpo iekārtas vai veic to apkopi.

Šo katalogu ir nepieciešams saglabāt visu laiku, kamēr iekārtas tiek izmantotas, un nodot katalogu nākamajam īpašniekam vai lietotājam.

Tetra Pak neatbild par jebkuriem iekārtas bojājumiem, kuri rodas līdz ar iekārtu piegādāto instrukciju neievērošanas rezultātā.

Piegādātas rokasgrāmatas

Līdz ar iekārtu var tikt piegādātas šādas rokasgrāmatas

- CM
  Pārslēgšanas rokasgrāmata sniedz tehniķiem informāciju par iekārtas pārslēgšanu dažādos atšķirīgos ražošanas režīmos.
- EM
  Elektriskās instalācijas rokasgrāmata sniedz tehniķiem informāciju par iekārtas elektriskās instalācijas sistēmu.
- IM
  Uzstādīšanas rokasgrāmata sniedz tehniķiem informāciju, kas nepieciešama drošai iekārtas uzstādīšanai.
- MM
  Apkopes rokasgrāmata sniedz tehniķiem informāciju par iekārtas apkopi.
- OM
  Ekspluatācijas rokasgrāmata sniedz apkalpojošajam personālam informāciju par iekārtas apkalpošanu un ekspluatēšanu pirms darba sākuma, darba laikā un pēc darba beigām.
- SPC
  Rezerves daļu katalogs sniedz informāciju, kas nepieciešama, lai pasūtītu rezerves daļas no Tetra Pak
- TeM
  Tehniskā rokasgrāmata
  - sniedz tehniķiem informāciju, kas nepieciešama drošai iekārtas uzstādīšanai
  - sniedz tehniķiem informāciju par iekārtas apkopi
  - sniedz tehniķiem informāciju par mašīnas/iekārtas elektrisko instalāciju
  - sniedz informāciju, kas nepieciešama, lai pasūtītu rezerves daļas no Tetra Pak.

Lappuses izkārtojums

Skatīt ilustrāciju (A) i-5 lappusē: Galvenās lappuses Rezerves daļu katalogā sastāv no ilustrāciju lapas (1) un atbilstīgās saraksta lapas (7). Lappuses numurs (5) ir norādīts ilustrāciju lapas galvenē un saraksta lapas kājenē. Dokumenta numurs (6) ir norādīts saraksta lapas kājenē.

Lappušu numerācija

Skatīt ilustrāciju (A) lappusē i-5: Lappuses numurs (5) sastāv no trim daļām:

- nodaļas numura (2)
- secīga lappuses numura nodaļas ietvaros (3)
- kopējā lappušu skaita nodaļā (3)

Iepazīstināšana ar iekārtu

Ražotājs

Ražotāja nosaukumu un adresi skatīt šī kataloga otrajā lappusē.

Serviss

Lai pasūtītu rezerves daļas šai mašīnai vai lai ziņotu par problēmām saistībā ar šīs mašīnas ekspluatāciju, sazinieties ar tuvāko Tetra Pak pārstāvniecību.

Ja Jums ir citi jautājumi, piezīmes vai ieteikumi par iekārtas un tās dokumentācijas uzlabošanu, tad lūdzam sazināties ar Sakaru biroju.

Identifikācija

EK klasifikācija

Šī iekārta atbilst galvenajām Eiropas Ekonomiskās Zonas (EEA) regulām, kuras attiecas uz veselību un drošību.

Mašīnas tipa plāksnīte

Ilustrācijā (B) i-5 lappusē ir redzams mašīnas tipa plāksnītes paraugs. Aktuālās mašīnas tipa plāksnīte un tās atrašanās vieta uz iekārtas ir parādīta līdz ar šo iekārtu piegādāto rokasgrāmatu Ievada nodaļā. Mašīnas tipa plāksnīte ietver turpmāk uzskaitīto informāciju, kura ir nepieciešama, sazinoties ar Tetra Pak par šo konkrēto iekārtu.

- Mašīnas tips (8)
- Daudzums (9)
- Rasējuma specifikācijas (10)
- Mašīnas sērijas numurs (11)
- Ražotājs (12)
- CE apzīmējums (13)
- Izgatavošanas gads (14)

Ilustrācijā (C) lappusē i-5 ir parādīts mašīnas specifikācijas paraugs. Pārliecinieties, ka šīs rokasgrāmatas titullapās minētā informācija par iekārtu atbilst tai, kas norādīta uz mašīnas tipa plāksnītes un mašīnas specifikācijā.

Rezerves daļu kataloga lietošana

Vajadzīgās rezerves daļas numura atrašana

a) Skatiet ilustrāciju (D) lappusē i-5: Atrodiet nodaļas numuru (15), kas norādīts līdzās galvenajai grupai, kurā ietilpst Jūsu meklētā rezerves daļa.

Pozīcijas b) un c) skatiet ilustrāciju (E) lappusē i-6.

b) Galvenās grupas ilustrācijā atrodiet mašīnas apakšgrupu (17), kurā ietilpst Jūsu meklētā detaļa vai apakšgrupa. Atzīmējiet pozīcijas numuru (18) un pievērsieties saraksta lappusei, kura seko šai ilustrācijai.

c) Sameklējiet atbilstīgo pozīcijas numuru (16) vai apakšgrupas nosaukumu (19). Pievērsieties atbilstīgajam lappuses numuram (20), kas norādīts ailē pa labi. Tetra Pak norādes apzīmēšanai ir izvēlējies vienmēr izmantot uz funkciju orientētu struktūru. Priedēklis, kas norāda uz funkciju orientētu struktūru (=), norādes apzīmējumā nav parādīts.

Pozīcijas d) un e) skatiet ilustrāciju (F) lappusē i-6.

d) Atrodiet vajadzīgo rezerves daļu (21) apakšgrupas ilustrācijā un atzīmējiet šīs detaļas pozīcijas numuru.

e) Šīs detaļas numurs (29) un apraksts (30) atrodas saraksta lapā līdzās pozīcijas numuram.

Rezerves daļu katalogā sniegtā informācija

Šis saraksts attiecas uz ilustrāciju (F) lappusē i-6. Rezerves daļu katalogs satur šādu informāciju par grupām, apakšgrupām un iekārtas rezerves daļām:

- Grupas struktūras norāde (22). Norāda nākamo augstāko grupu iekārtas saraksta struktūrā.
- Grupas nosaukums (23)
- Mērvienība (25)
- Skaits (26)
- Montāžas rasējuma numurs (27)
- Saraksta lappuses zona (28). Tiek izmantota tad, ja grupas ilustrācija vai saraksts ir uz vairākām lappusēm.
- Daļas vai apakšgrupas numurs (29)
- Apakšgrupas nosaukums vai daļas apraksts (30)
- Grupas numurs (31)
- Iekārtas numurs (32)
- Grupas informācijas iedaļas apzīmējums (33). Norāda, vai iedaļa zem šī apzīmējuma attiecas uz noteiktu mašīnas variantu, vai arī tas ir kopējo rezerves daļu saraksts. Ja sarakstam ir vairāk nekā viens variants un katram variantam ir savs montāžas rasējums, tad tiek dota atsauce uz lappusi, kur atrodams katra varianta montāžas rasējums.
- Iekšējā informācija (34)

Inleiding

Informatiehandboek

Tetra Pak adviseert alle meegeleverde handboeken zorgvuldig te lezen. Controleer of het bedienende of onderhoudspersoneel van de machine de beschikking heeft over de meegeleverde handboeken

Het is belangrijk deze catalogus tijdens de levensduur van de machine te bewaren en de catalogus door te geven aan iedere volgende eigenaar of gebruiker.

Tetra Pak stelt zich niet aansprakelijk voor eventuele schade aan de installatie als gevolg van het niet naleven van de instructies die in de meegeleverde handboeken worden gegeven.

Meegeleverde handboeken

De bij deze installatie meegeleverde handboeken omvatten

- CM
  Het conversiehandboek geeft technici informatie met betrekking tot de ombouw van de installatie tussen verschillende productiemodi.
- EM
  Het elektriciteitshandboek informeerttechnici omtrent het elektrischesysteem van de installatie.
- IM
  Het installatiehandboek informeert technici hoe men de installatie op veilige wijze installeert.
- MM
  Het onderhoudshandboek geeft technici informatie over het onderhoud van de installatie.
- OM
  Het bedieningshandboek informeert de operator betreffende het omgaan met en het bedienen van de installatie voor, tijdens en na de productie.
- SPC
  De reserveonderdelencatalogus geeft de nodige informatie omtrent het bestellen van reserveonderdelen bij Tetra Pak
- TeM
  Het technische handboek
  - informeert technici hoe men de installatie op veilige wijze installeert
  - informeert technici omtrent het onderhoud van de installatie
  - informeert technici omtrent het elektrische systeem van de machine/ installatie
  - informeert over welke informatie men nodig heeft om reserveonderdelen bij Tetra Pak te bestellen.

Pagina layout

Zie afbeelding (A) op pagina i-5: De belangrijkste bladzijden van een reserveonderdelencatalogus bestaan uit een bladzijde met afbeeldingen (1) en een bladzijde met een corresponderende lijst (7). Het bladzijde-nummer (5) is te vinden in de kop van een bladzijde met een afbeelding en in de voetnoot van een lijstbladzijde. Het documentennummer (6) is te vinden in de voetnoot van een lijstbladzijde.

Bladzijdenummering

Zie afbeelding (A) op pagina: i-5: Een bladzijdenummer (5) bestaat uit drie delen:

- hoofdstuknummer (2)
- opeenvolgend bladzijdenummer in het hoofdstuk (3)
- totaal aantal bladzijden in het hoofdstuk (4)

Introductie van de machine

Fabrikant

Zie de tweede bladzijde van deze catalogus voor naam en adres van de fabrikant.

Service

Neem voor het bestellen van reserveonderdelen voor deze machine, of om bedieningsproblemen met betrekking tot deze machine te melden, contact op met de dichtstbijzijnde Tetra Pak vestiging.

Neem contact op met de contactpersoon voor verdere informatie, opmerkingen of suggesties ter verbetering van de installatie en de bijbehorende documentatie.

Identificatie

CE-classificatie

Deze installatie voldoet aan de basisvoorschriften voor gezondheid en veiligheid voor het Europese Economische Gebied (EEG).

Machineplaatje

Afbeelding (B) op bladzijde i-5 toont een voorbeeld van een machineplaatje. Een afbeelding van het geldige machineplaatje en de plaatsing ervan worden getoond in de Inleiding van de handboeken, die bij deze installatie worden meegeleverd. Het machineplaatje bevat onderstaande gegevens, die men nodig heeft wanneer men omtrent de desbetreffende installatie contact opneemt met Tetra Pak.

- Machinetype (8)
- Volume (9)
- Specificatietekeningen (10)
- Serienummer van de machine (11)
- Fabrikant (12)
- CE-markering (13)
- Jaar van fabrikage (14)

Afbeelding (C) op pagina i-5 toont een voorbeeld van een machinespecificatie. Controleer of de gegevens betreffende de installatie op de eerste bladzijden van dit handboek overeenkomen met de gegevens op het machineplaatje en de machinespecificatie.

Gebruik van de reserveonderdelencatalogus

Vinden van het bestelnummer van een reserveonderdeel

a) Zie afbeelding (D) op pagina i-5: Ga naar het hoofdstuknummer (15) dat wordt aangeven naast de hoofdgroep waarin zich het door u gezochte onderdeel bevindt.

Items b) en c) verwijzen naar afbeelding (E) op pagina i-6.

b) Op de afbeelding van de hoofdgroep zoekt u de machinesubgroep (17), die het gezochte onderdeel of de gezochte subgroep bevat. Noteer het positienummer (18) en ga naar de lijstbladzijde die op de afbeelding volgt.

c) Zoek naar het positienummer/de referentie (16) of de subgroep-naam (19). Ga naar de corresponderende bladzijde (20) die in de rechterkolom staat vermeld. Tetra Pak heeft voor de benoeming van de referenties gekozen voor de functiegeoriënteerde structuur. De prefixaanduidende functiegeoriënteerde structuur (=) wordt niet in de referentie getoond.

Items d) en e) verwijzen naar afbeelding (F) op pagina i-6.

d) Zoek het gewenste deel (21) op de subgroepafbeelding en noteer het positienummer van het onderdeel.

e) Het bestelnummer (29) en de omschrijving (30) van het onderdeel staan naast het positienummer op de lijstbladzijde.

Informatie die in een reserveonderdelencatalogus wordt gegeven

De onderstaande lijst verwijst naar afbeelding (F) op bladzijde i-6. Een reserveonderdelencatalogus bevat de volgende informatie over groepen, subgroepen en reserveronderdelen voor de installatie:

- Referentie groepstructuur (22). Geeft de volgende hogere groep in de lijststructuur van de installatie aan.
- Groepsnaam (23)
- Meeteenheid (25)
- Hoeveelheid (26)
- Nummer montagetekening (27)
- Lijst bladzijdenreeks (28). Wordt vermeld wanneer er meerdere bladzijden in de groepsafbeelding of -lijst voorkomen.
- Deel- of subgroepnummer (29)
- Subgroepnaam of onderdeelbeschrijving (30)
- Groepsnummer (31)
- Machinenummer (32)
- Titel groepsinformatie (33). Geeft aan of het gedeelte onder de titel voor een specifieke machinesoort is of dat het een lijst met gebruikelijke onderdelen is. Indien een lijst meer dan één type bevat en ieder type zijn eigen montagetekening heeft, wordt een bladzijdereferentie getoond voor de montagetekening van het type.
- Interne informatie (34)

Introduksjon

Informasjon om manualen

Tetra Pak anbefaler at du leser nøye gjennom alle leverte manualer. Sørg for at manualene er tilgjengelige for alle som betjener eller vedlikeholder utstyret.

Det er viktig at du tar vare på denne katalogen under hele levetiden til utstyret og at du gir den videre til eventuelle nye eiere eller brukere.

Tetra Pak vil ikke være ansvarlig for skader på utstyret som oppstår fordi brukeren ikke følger instruksjonene i manualene som følger med utstyret.

Leverte manualer

Manualene som leveres med dette utstyret, kan inkludere

- CM
  Konverteringsmanualen gir teknikere informasjon om hvordan de konverterer utstyret mellom ulike produksjonsmodi.
- EM
  Den elektriske manualen gir teknikere informasjon om utstyrets elektriske system.
- IM
  Installasjonsmanualen gir teknikere informasjon som kreves for å kunne installere utstyret på en sikker måte.
- MM
  Vedlikeholdsmanualen gir teknikere informasjon om vedlikehold av utstyret.
- OM
  Driftsmanualen gir operatøren informasjon om hvordan han håndterer og bruker utstyret før, under og etter produksjon.
- SPC
  Reservedelskatalogen inneholder informasjon som du trenger for å bestille reservedeler fra Tetra Pak
- TeM
  Den tekniske manualen
  – gir teknikere informasjon om sikker installasjon av utstyret
  – gir teknikere informasjon om vedlikehold av utstyret
  – gir teknikere informasjon om maskinens/utstyrets elektriske system
  – inneholder informasjon som du trenger for å bestille reservedeler fra Tetra Pak.

Sideoppsett

Se illustrasjonen (A) på side i-5: Hovedsidene i reservedelskatalogen består av en illustrasjonsside (1) og en korresponderende listeside (7). Sidenummeret (5) vises i topteksten på illustrasjonssiden og i bunnteksten på listesiden. Dokumentnummeret (6) vises i bunnteksten på listesiden.

Sidenummerering

Se illustrasjonen (A) på side i-5: Et sidenummer (5) består av tre deler:

- kapittelnummer (2)
- etterfølgende sidenummer i kapitlet (3)
- det totale antall sider i kapitlet (4)

Introduksjon av maskinen

Produsent

Hvis du ønsker produsentens navn og adresse, kan du se side to i denne katalogen.

Service

Når du skal bestille reservedeler til denne maskinen eller rapportere problemer forbundet med driften av denne maskinen, må du kontakte ditt nærmeste Tetra Pak-kontor.

Når det gjelder andre forespørsler, kommentarer eller forslag til forbedringer av utstyret og dets dokumentasjon, kan du ta kontakt med din kontaktperson.

Identifisering

CE-klassifisering

Dette utstyret er i overensstemmelse med de grunnleggende helse- og sikkerhetsforskriftene i Det europeiske økonomiske samarbeidsområdet (EØS).

Maskinplate

Illustrasjonen (B) på side i-5 viser et eksempel på en maskinplate.
En illustrasjon av en gyldig maskinplate og hvor denne er plassert på utstyret, er vist i introduksjonskapitlet i manualene som følger med dette utstyret. Maskinplaten inneholder nedenstående data, som du trenger når du skal kontakte Tetra Pak angående dette bestemte utstyret.

- Maskintype (8)
- Volum (9)
- Tegningsspesifikasjoner (10)
- Maskin-serienummer (11)
- Produsent (12)
- CE-merke (13)
- Produksjonsår (14)

Illustrasjonen (C) på side i-5 viser et eksempel på en maskinspesifikasjon. Sørg for at utstyrsdataene som står oppført foran i denne manualen, samsvarer med dataene på maskinplaten og maskinspesifikasjonen.

Hvordan bruke denne reservedelskatalogen

Finn et reservedelsnummer

a) Se illustrasjonen (D) på side i-5: Gå til kapittelnummeret (15) som er angitt ved siden av hovedgruppen som inneholder delen du vil finne.

Punkt b) og c) viser til illustrasjonen (E) på side i-6.

b) På hovedgruppeillustrasjonen ser du etter maskinundergruppen (17) som inneholder delen eller undergruppen du ser etter. Merk deg posisjonsnummeret (18), og gå til listesiden som kommer etter illustrasjonen.

c) Se etter posisjonsnummeret/referansebetegnelsen (16) eller undergruppenavnet (19). Gå til det korresponderende sidenummeret (20) som står oppført i høyre kolonne. Tetra Pak har valgt å alltid bruke den funksjonsorienterte inndelingen for referansebetegnelse. Prefiksen som angir funksjonsorientert inndeling (=), er ikke vist i referansebetegnelsen.

Punkt d) og e) viser til illustrasjonen (F) på side i-6.

d) Finn delen (21) du ser etter på undergruppeillustrasjonen, og merk deg delens posisjonsnummer.

e) Delenummeret (29) og delebeskrivelsen (30) finner du ved siden av posisjonsnummeret på listesiden.

Informasjon i en reservedelskatalog

Listen nedenfor viser til illustrasjonen (F) på side i-6. En reservedelskatalog inneholder følgende informasjon om grupper, undergrupper og reservedeler for utstyret:

- Gruppeinndelingsreferanse (22). Angir den neste gruppen opp i inndelingen av utstyrslisten.
- Gruppenavn (23)
- Målenhet (25)
- Antall (26)
- Tegningsnummer (27)
- Listesideområde (28). Inkludert hvis det er flere sider i gruppe-illustrasjonen eller listen.
- Dele- eller undergruppenummer (29)
- Undergruppenavn eller delebeskrivelse (30)
- Gruppenummer (31)
- Utstyrsnummer (32)
- Gruppeinformasjonsoverskrift (33). Angir om avsnittet under overskriften er for en bestemt maskinvariant eller om det er en liste over vanlige deler. Hvis en liste har flere varianter og hver variant har sin egen sammenstillingstegning, vises det en sidereferanse til variantens sammenstillingstegning.
- Intern informasjon (34)

Wprowadzenie

Informacje na temat instrukcji

Firma Tetra Pak zaleca dokładne przeczytanie wszystkich dostarczonych instrukcji. Należy upewnić się, że dostarczone instrukcje są dostępne dla personelu, który obsługuje lub konserwuje maszynę.

Należy przechowywać ten katalog przez cały okres użytkowania maszyny i przekazać go kolejnemu właścicielowi lub użytkownikowi.

Firma Tetra Pak nie będzie ponosić odpowiedzialności za jakiekolwiek uszkodzenia maszyny spowodowane niestosowaniem się do zaleceń zawartych w instrukcjach dostarczonych z maszyną.

Dostarczone instrukcje

W skład dokumentacji dostarczonej z maszyną wchodzą:

- Instrukcja konwersji (CM)
  W tej instrukcji zawarte są informacje dotyczące dostosowania maszyny do różnych trybów produkcji.
- Instrukcja dotycząca wyposażenia elektrycznego (EM)
  W tej instrukcji zawarte są informacje dotyczące układu elektrycznego maszyny.
- Instrukcja instalacji (IM)
  W tej instrukcji zawarte są informacje niezbędne do bezpiecznego zainstalowania maszyny.
- Instrukcja konserwacji (MM)
  W tej instrukcji zawarte są informacje dotyczące konserwacji maszyny.
- Instrukcja obsługi (OM)
  W tej instrukcji zawarte są informacje dotyczące obsługi maszyny przed rozpoczęciem produkcji, w jej trakcie oraz po jej zakończeniu.
- Katalog części zamiennych (SPC)
  W katalogu zawarte są informacje dotyczące zamawiania części zamiennych w firmie Tetra Pak.
- Instrukcja techniczna (TeM)
  Instrukcja techniczna zawiera informacje:
  - dotyczące bezpiecznego instalowania maszyny,
  - dotyczące konserwacji maszyny,
  - dotyczące układu elektrycznego maszyny,
  - dotyczące zamawiania części zamiennych w firmie Tetra Pak.

Układ strony

Patrz rysunek (A) na stronie i-5: Główne strony w Katalogu części zamiennych składają się ze strony zawierającej rysunek (1) i odpowiadającej jej strony zawierającej listę (7). Numer strony (5) znajduje się w nagłówku strony zawierającej rysunek i w stopce strony zawierającej listę. Numer dokumentu (6) znajduje się w stopce strony zawierającej listę.

Numeracja stron

Patrz rysunek (A) na stronie i-5: Numer strony (5) składa się z trzech części:

- numeru rozdziału (2),
- kolejnego numeru strony w rozdziale (3),
- całkowitej liczby stron w rozdziale (4).

Ogólne informacje o maszynie

Producent

Nazwę i adres producenta można znaleźć na drugiej stronie niniejszego katalogu.

Serwis

Aby zamówić części zapasowe do tej maszyny lub zgłosić problemy związane z jej pracą, należy skontaktować się z najbliższym biurem Tetra Pak.

Można kontaktować się także w przypadku innych zapytań, uwag lub sugestii dotyczących udoskonalenia urządzenia i dokumentacji.

Identyfikacja

Klasyfikacja CE

Maszyna spełnia podstawowe wymogi z zakresu bezpieczeństwa i ochrony zdrowia obowiązujące w Europejskiej Strefie Ekonomicznej (EEA).

Tabliczka znamionowa

Na rysunku (B), znajdującym się na stronie i-5, pokazano przykładową tabliczkę znamionową.
Rysunek prawidłowej tabliczki znamionowej oraz jej umiejscowienie na maszynie pokazano w rozdziale Wprowadzenie zawartym w instrukcjach dostarczonych z maszyną. Tabliczka znamionowa zawiera następujące dane potrzebne w przypadku kontaktowania się z firmą Tetra Pak w sprawie dotyczącej danej maszyny:

- typ maszyny (8),
- objętość (9),
- specyfikacje rysunkowe (10),
- numer seryjny maszyny (11),
- nazwę producenta (12),
- oznaczenie CE (13),
- rok produkcji (14).

Na rysunku (C) zamieszczonym na stronie i-5 pokazano przykład specyfikacji maszyny. Należy sprawdzić, czy dane dotyczące maszyny przedstawione na pierwszej stronie tej instrukcji odpowiadają danym zawartym na tabliczce znamionowej maszyny oraz specyfikacji maszyny.

Jak korzystać z niniejszego Katalogu części zamiennych

Należy odnaleźć numer części zamiennej

a) Zapoznaj się z rysunkiem (D) na stronie i-5: przejdź do numeru rozdziału (15) pokazanego obok głównej grupy zawierającej część, którą chcesz odszukać.

Punkty b) i c) odnoszą się do rysunku (E) na stronie i-6.

b) Na rysunku grupy głównej odszukaj podgrupę maszyny (17), która zawiera odpowiednią część lub podgrupę, której szukasz. Zanotuj numer pozycji (18) i przejdź do strony z listą odpowiadającą rysunkowi.

c) Odszukaj numer pozycji/oznaczenie odnośnika (16) lub nazwę podgrupy (19). Przejdź do odpowiedniego numeru strony (20) podanego w kolumnie umieszczonej po prawej stronie. Firma Tetra Pak w przypadku oznaczenia odnośnika korzysta ze struktury ukierunkowanej na funkcję. Przedrostek wskazujący strukturę ukierunkowaną na funkcję (=) nie jest pokazany w oznaczeniu odnośnika.

Punkty d) i e) odnoszą się do rysunku (F) na stronie i-6.

d) Na rysunku podgrupyodszukaj odpowiednią część (21) i zanotuj numer pozycji części.

e) Numer części (29) oraz jej opis (30) podano na stronie zawierającej listę obok numeru pozycji.

Informacje zawarte w Katalogu części zamiennych

Poniższa lista odnosi się do rysunku (F), znajdującego się na stronie i-6. Katalog części zamiennych zawiera następujące informacje o grupach, podgrupach oraz częściach zamiennych maszyny:

- Odnośnik struktury grup (22). Wskazuje następną wyższą grupę zawartą w strukturze listy maszyny.
- Nazwa grupy (23).
- Jednostka miary (25).
- Liczba (26).
- Numer rysunku złożeniowego (27).
- Zakres stron zawierających listę (28). Podany w przypadku występowania wielu stron zawierających rysunek grupy lub listę.
- Numer części lub podgrupy (29).
- Nazwa podgrupy lub opis części (30).
- Numer grupy (31).
- Numer maszyny (32).
- Nagłówek informacyjny grupy (33). Wskazuje, czy sekcja umieszczona pod nagłówkiem dotyczy określonego wariantu maszyny, czy też jest to lista wspólna dla wszystkich wariantów. Jeśli lista występuje w wielu wariantach i dla każdego z nich dostępny jest osobny rysunek złożeniowy, podany jest odnośnik strony do rysunku złożeniowego dla danego wariantu.
- Informacje wewnętrzne (34).

Introdução

Informações sobre o Manual

A Tetra Pak recomenda que leia atentamente todos os manuais incluídos. Certifique-se de que os manuais incluídos estão disponíveis para o pessoal que utiliza ou faz a manutenção do equipamento.

É importante que mantenha este catálogo durante toda a vida útil do equipamento, devendo ainda ser fornecido a quaisquer proprietários e operadores subsequentes do mesmo.

A Tetra Pak não será responsável por quaisquer danos no equipamento provocados pelo não seguimento das instruções fornecidas nos manuais que acompanham este equipamento.

Manuais Fornecidos

Os manuais fornecidos com este equipamento podem incluir

- CM
  O Manual de Conversão (Conversion Manual) fornece aos técnicos informações sobre a conversão do equipamento entre modos de produção diferentes.
- EM
  O Manual Eléctrico (Electrical Manual) fornece aos técnicos informações sobre o sistema eléctrico do equipamento.
- IM
  O Manual de Instalação (Installation Manual) fornece aos técnicos as informações necessárias à instalação do equipamento em segurança.
- MM
  O Manual de Manutenção (Maintenance Manual) fornece aos técnicos informações sobre como realizar a manutenção do equipamento.
- OM
  O Manual de Funcionamento (Operation Manual) fornece ao operador informações sobre o manuseamento e funcionamento do equipamento antes, durante e após a produção.
- SPC
  O Spare Parts Catalogue (Catálogo das Peças Sobressalentes) fornece as informações necessárias para encomendar peças sobressalentes à Tetra Pak
- TeM
  O Manual Técnico (Technical Manual)
  - fornece aos técnicos as informações necessárias à instalação do equipamento em segurança
  - fornece aos técnicos informações sobre a manutenção do equipamento
  - fornece aos técnicos informações sobre o sistema eléctrico da máquina/equipamento
  - fornece as informações necessárias para encomendar peças sobressalentes à Tetra Pak.

Desenho da Página

Consulte a ilustração (A) na página i-5: As páginas principais num Catálogo de Peças Sobressalentes são constituídas por uma página de ilustração (1) e uma página de lista correspondente (7). O número de página (5) é apresentado no cabeçalho de uma página de ilustração e no rodapé de uma página de lista. O número do documento (6) é apresentado no rodapé de uma página de lista.

Numeração das Páginas

Consulte a ilustração (A) na página i-5: Um número de página (5) tem três partes:

- número do capítulo (2)
- número das páginas consecutivas dentro do capítulo (3)
- número de páginas total no capítulo (4)

Introdução da Máquina

Fabricante

Quanto ao nome e endereço do fabricante, consulte a segunda página deste catálogo.

Manutenção

Para encomendar peças sobressalentes para esta máquina ou para apresentar relatórios de problemas associados com o funcionamento desta máquina, contacte os escritórios mais próximos da Tetra Pak.

Contacte a Ligação com outras questões, comentários ou sugestões para melhoria referentes ao equipamento e à sua documentação.

Identificação

Classificação da CE

Este equipamento está em conformidade com as regulamentações básicas da saúde e segurança da Área Económica Europeia (AEE).

Chapa de Identificação da Máquina

A ilustração (B) na página i-5 mostra um exemplo de uma chapa de identificação da máquina.
No capítulo Introdução dos manuais entregues com este equipamento é apresentada uma ilustração da chapa de identificação válida da máquina e a sua localização no equipamento. A chapa de identificação da máquina contém os dados listados em baixo, necessários quando contactar a Tetra Pak em relação a este equipamento específico.

- Tipo de máquina (8)
- Volume (9)
- Especificações do desenho (10)
- Número de série da máquina (11)
- Fabricante (12)
- Marca da CE (13)
- Ano de fabricação (14)

A ilustração (C) na página i-5 mostra um exemplo de uma especificação da máquina. Certifique-se de que os dados do equipamento listados nas primeiras páginas deste manual correspondem aos dados indicados na chapa de identificação da máquina e às especificações da máquina.

Como utilizar este Catálogo de Peças Sobressalentes

Localize o Número da Peça Sobressalente

a) Consulte a ilustração (D) na página i-5: Vá para o número do capítulo (15) indicado no grupo principal que contém a peça que pretende localizar.

Os itens b) e c) referem-se à ilustração (E) na página i-6:

b) Na ilustração do grupo principal, procure o subgrupo da máquina (17) que contém a peça ou o subgrupo que procura. Tome nota do número de posição (18) e vá para a página de lista a seguir à ilustração.

c) Procure o número de posição/designação de referência (16) ou o nome do subgrupo (19). Vá para o número de página correspondente (20) indicado na coluna do lado direito. A Tetra Pak preferiu utilizar sempre a estrutura orientada para a função como designação de referência. O prefixo que inicia a estrutura orientada para a função (=) não está indicada na designação de referência.

Os itens d) e e) referem-se à ilustração (F) na página i-6:

d) Localize a peça (21) que procura na ilustração do subgrupo e tome nota do número de posição da peça.

e) O número de peça (29) e a descrição da peça (30) são apresentados ao lado do número da posição na página de lista.

Informações listadas num Catálogo de Peças Sobressalentes

A lista em baixo refere-se à ilustração (F) na página i-6: Um Catálogo de Peças Sobressalentes contém as seguintes informações sobre grupos, subgrupos e peças sobressalentes para o equipamento:

- Referência da estrutura do grupo (22). Indica o grupo mais elevado seguinte na estrutura da lista do equipamento.
- Nome do grupo (23)
- Unidade de medida (25)
- Quantidade (26)
- Número de série do conjunto (27)
- Intervalo de páginas da lista (28). Incluído se existirem várias páginas na ilustração ou na lista do grupo.
- Número de peça ou subgrupo (29)
- Nome do subgrupo ou descrição da peça (30)
- Número do grupo (31)
- Número do equipamento (32)
- Cabeçalho das informações do grupo (33). Indica se a secção em baixo do cabeçalho é de uma variante específica da máquina ou se é uma lista de peças comuns. Se uma lista tiver mais de uma variante e cada variante tiver o seu próprio desenho de conjunto, é apresentada uma referência de página ao desenho do conjunto da variante.
- Informações internas (34)

Introducere

Informații despre manual

Tetra Pak recomandă citirea cu atenție a tuturor manualelor livrate. Asigurați-vă că manualele livrate sunt puse la îndemâna personalului care exploatează sau întreține echipamentul.

Este important să păstrați acest catalog pe întreaga durată de viață a echipamentului și să transmiteți catalogul deținătorilor sau utilizatorilor ulteriori.

Tetra Pak nu va fi răspunzător pentru niciun defect al echipamentului cauzat prin nerespectarea instrucțiunilor date în manualele care însoțesc acest echipament.

Manuale livrate

Manualele livrate cu acest echipament pot include

- CM
  Manualul de conversie furnizează tehnicienilor informații despre conversia echipamentului între diferite moduri de producție.
- EM
  Manualul electric furnizează tehnicienilor informații despre sistemul electric al echipamentului.
- IM
  Manualul de instalare furnizează tehnicienilor informații necesare pentru instalarea în siguranță a echipamentului.
- MM
  Manualul de întreținere furnizează tehnicienilor informații cu privire la întreținerea echipamentului.
- OM
  Manualul de exploatare pune la dispoziție operatorilor informații despre manevrarea și exploatarea echipamentului înainte, în timpul și după producție.
- SPC
  Catalogul pieselor de schimb furnizează informații necesare pentru comandarea pieselor de schimb de la Tetra Pak.
- TeM
  Manualul tehnic
  – furnizează tehnicienilor informații necesare pentru instalarea în siguranță a echipamentului
  – furnizează tehnicienilor informații necesare cu privire la întreținerea echipamentului
  – furnizează tehnicienilor informații despre sistemul electric al mașinii/echipamentului
  – furnizează informații necesare pentru comandarea pieselor de schimb de la Tetra Pak.

Configurația paginilor

Examinați ilustrația (A) de pe pagina i-5: Paginile principale dintr-un catalog de piese de schimb constau dintr-o pagină de ilustrare (1) și o pagină de liste corespunzătoare (7). Numărul paginii (5) apare în antetul unei pagini de ilustrare și în subsolul unei pagini de liste. Numărul documentului (6) apare în subsolul unei pagini de liste.

Numerotarea paginilor

Examinați ilustrația (A) de la pagina i-5: Un număr de pagină (5) are trei părți:

- numărul capitolului (2)
- numărul paginii consecutive din cadrul capitolului (3)
- număr total de pagini din capitol (4)

Prezentare introductivă a mașinii

Producător

Pentru numele și adresa producătorului, consultați pagina a doua a acestui catalog.

Service

Pentru comandarea pieselor de schimb pentru această mașină sau pentru a raporta problemele asociate cu exploatarea acestei mașini, contactați cel mai apropiat birou Tetra Pak.

Contactați Liaison cu privire la alte întrebări, comentarii sau sugestii legate de îmbunătățirea echipamentului și a documentației acestuia.

Identificare

Clasificare CE

Acest echipament este fabricat în conformitate cu reglementările de bază cu privire la sănătate și siguranță din Zona economică europeană (EEA).

Plăcuța mașinii

Ilustrația (B) de la pagina i-5 arată un exemplu al unei plăcuțe de mașină. O ilustrație a plăcuței valide a mașinii și a poziției acesteia pe echipament este arătată în capitolul introductiv al manualelor livrate împreună cu acest echipament. Plăcuța mașinii conține datele listate mai jos, necesare în cazul în care contactați Tetra Pak în legătură cu acest echipament specific.

- Tip mașină (8)
- Volum (9)
- Specificații de desen (10)
- Număr de serie al mașinii (11)
- Producător (12)
- Marcaj CE (13)
- Anul fabricației (14)

Ilustrația (C) de la pagina i-5 arată un exemplu al unei specificații de mașină. Asigurați-vă că datele specifice echipamentului, listate în paginile din față ale acestui manual, corespund cu datele de pe plăcuța mașinii și cu specificațiile mașinii.

Cum se utilizează acest catalog de piese de schimb

Localizarea unui număr de piesă de schimb

a) Examinați ilustrația (D) de la pagina i-5: Treceți la numărul de capitol (15) indicat lângă grupa principală care conține piesa pe care doriți să o localizați.

Articolele b) și c) se referă la ilustrația (E) de la pagina i-6.

b) Pe ilustrația grupei principale, căutați subgrupa aferentă mașinii (17) care conține piesa sau subgrupa pe care o căutați. Notați numărul poziției (18) și treceți la pagina de liste care urmează după ilustrație.

c) Căutați numărul poziției/marcarea de referință (16) sau numele subgrupei (19). Treceți la numărul de pagină corespunzător (20) listat în coloana din partea dreaptă. Tetra Pak a optat ca întotdeauna să utilizeze structura orientată pe funcție pentru marcarea de referință. Prefixul care indică structura orientată pe funcție (=) nu este arătat în marcarea de referință.

Articolele d) și e) se referă la ilustrația (F) de la pagina i-6.

d) Localizați piesa (21) pe care o căutați pe ilustrația subgrupei și notați numărul de poziție al piesei.

e) Numărul piesei (29) și descrierea piesei (30) sunt listate lângă numărul de poziție de pe pagina de liste.

Informațiile listate într-un catalog de piese de schimb

Lista de mai jos se referă la ilustrația (F) de la pagina i-6. Un catalog de piese de schimb conține următoarele informații despre grupe, subgrupe și piese de schimb pentru echipament:

- Referința despre structura grupelor (22). Indică următoarea grupă superioară din structura de liste a echipamentului.
- Numele grupei (23)
- Unitatea de măsură (25)
- Cantitatea (26)
- Numărul de desen de ansamblu (27)
- Intervalul de pagini de liste (28). Inclus dacă există mai multe pagini în ilustrația sau lista grupei.
- Numărul piesei sau al subgrupei (29)
- Numele subgrupei sau descrierea piesei (30)
- Numărul grupei (31)
- Numărul echipamentului (32)
- Antet cu informații despre grupă (33). Indică dacă secțiunea de sub antet se referă la o anumită variantă de mașină sau este o listă de piese comune. Dacă o listă are mai multe variante și fiecare variantă are propriul său desen de ansamblu, este arătată o referință de pagină pentru desenul de ansamblu al variantei.
- Informații interne (34)

Úvod

Informácie o návode

Spoločnosť Tetra Pak odporúča, starostlivo si prečítať všetky dodané návody. Dbajte, aby pracovníci, obsluhujúci zariadenie alebo zabezpečujúci jeho údržbu, mali vždy dodané návody k dispozícii.

Je dôležité, aby bol tento katalóg k dispozícii počas celého času životnosti zariadenia, a aby sa katalóg dostal aj k jeho prípadnému ďalšiemu držiteľovi alebo používateľovi.

Spoločnosť Tetra Pak nepreberá zodpovednosť za akékoľvek poškodenie zariadenia spôsobené nedodržaním pokynov uvedených v návodoch dodávaných s týmto zariadením.

Dodané návody

S týmto zariadením vám mohli byť dodané nasledujúce návody:

- CM
  Návod na prestavovanie poskytuje technikom informácie o prestavovaní zariadenia do rôznych výrobných režimov.
- EM
  Elektrotechnický návod poskytujetechnikom informácie o elektrickom systéme zariadenia.
- IM
  Návod na inštaláciu poskytuje technikom informácie potrebné na bezpečnú inštaláciu zariadenia.
- MM
  Návod na údržbu poskytujetechnikom informácie o údržbe zariadenia.
- OM
  Návod na obsluhu poskytuje obsluhe informácie o zaobchádzaní a obsluhe zariadenia pred, počas a po prevádzke.
- SPC
  Katalóg náhradných dielcov poskytuje informácie potrebné na objednávanie náhradných dielcov od spoločnosti Tetra Pak
- TeM
  Technický návod
  - poskytuje technikom informácie potrebné na bezpečnú inštaláciu zariadenia
  - poskytuje technikom informácie o údržbe zariadenia
  - poskytuje technikom informácie o elektrickom systéme stroja/ zariadenia
  - poskytuje informácie potrebné na objednávanie náhradných dielcov od spoločnosti Tetra Pak.

Rozloženie strany

Pozri ilustráciu (A) na strane i-5: Hlavné strany Katalógu náhradných dielcov obsahujú stránku s ilustráciami (1) a príslušnú stranu so zoznamom (7). Číslo strany (5) sa uvádza v záhlaví na strane s ilustráciami a v päte strany so zoznamom. Číslo dokumentu (6) sa uvádza v päte strany so zoznamom.

Číslovanie strán

Pozri ilustráciu (A) na strane i-5: Číslo strany (5) má tri časti:

- číslo kapitoly (2)
- poradové číslo strany v rámci kapitoly (3)
- celkový počet strán v kapitole (4)

Základné informácie o stroji

Výrobca

Meno a adresa výrobcu sa uvádza na druhej strane tohto katalógu.

Servis

Pri objednávaní náhradných dielcov pre tento stroj alebo na nahlasovanie problémov súvisiacich s prevádzkou tohto stroja sa obráťte na najbližšie zastúpenie spoločnosti Tetra Pak.

S ostatnými otázkami, pripomienkami a podnetmi na vylepšenie stroja alebo zariadenia a jeho dokumentácie sa obracajte na kontaktnú osobu.

Identifikácia

Klasifikácia CE

Toto zariadenie spĺňa základné predpisy o ochrane zdravia a bezpečnosti Európskeho hospodárskeho priestoru (EEA).

Typový štítok stroja

Na ilustrácii (B) na strane i-5 uvádzame príklad typového štítku. Ilustrácia platného typového štítku stroja a jeho umiestnenia na zariadení sa uvádza v kapitole Úvod v návodoch, dodaných s týmto zariadením. Typový štítok obsahuje dolu údaje uvedené, potrebné pri kontaktoch so spoločnosťou Tetra Pak ohľadom tohto špecifického zariadenia.

- Typ stroja (8)
- Objem (9)
- Údaje o výkrese (10)
- Výrobné číslo stroja (11)
- Výrobca (12)
- Značka CE (13)
- Rok výroby (14)

Ilustrácia (C) na strane i-5 zobrazuje príklad špecifikácie stroja. Presvedčite sa, že údaje zariadenia uvedené na predných stranách tohto návodu zodpovedajú údajom na typovom štítku a v špecifikácii stroja.

Ako sa tento Katalóg náhradných dielcov používa

Vyhľadanie čísla náhradného dielca

a) Pozri ilustráciu (D) na strane i-5: Prejdite na číslo kapitoly (15) uvedené vedľa hlavnej skupiny obsahujúcej dielec, ktorý chcete vyhľadať.

Položky b) a c) odkazujú na ilustráciu (E) na strane i-6.

b) Na ilustrácii hlavnej skupiny hľadajte podskupinu stroja (17), ktorý obsahuje dielec alebo podskupinu, ktorú hľadáte. Poznamenajte si číslo položky (18) a prejdite stranu so zoznamom nasledujúcu po ilustrácii.

c) Vyhľadajte číslo položky/referenčné označenie (16) alebo názov podskupiny (19). Prejdite na príslušné číslo strany (20) uvedené v zozname v pravom stĺpci. Spoločnosť Tetra Pak sa rozhodla vždy používať funkčne zameranú štruktúru na referenčné označovanie. Predčíslie udávajúce funkčne orientovanú štruktúra (=) sa v referenčnom označení nezobrazuje.

Položky d) a e) odkazujú na ilustráciu (F) na strane i-6.

d) Nájdite dielec (21), ktorý hľadáte, na ilustrácii podskupiny a poznamenajte si číslo položky daného dielca.

e) Číslo dielca (29) a popis dielca (30) sa uvádza vedľa čísla položky na stránke so zoznamom.

Informácie uvádzané v Katalógu náhradných dielcov

Dolu uvedený zoznam odkazuje na ilustráciu (F) na strane i-6. Katalóg náhradných dielcov obsahuje nasledujúce informácia o skupinách, podskupinách a náhradných dielcov zariadenia:

- Referenčná štruktúrna skupina (22). Označuje najbližšiu vyššiu skupinu v štruktúre zoznamu zariadenia.
- Názobv skupiny (23)
- Jednotka merania (25)
- Množstvo (26)
- Číslo výkresu celkovej zostavy (27)
- Rozsah strán zoznamu (28). Uvádza sa, ak má ilustrácia alebo zoznam skupiny viac strán.
- Číslo dielca alebo podskupiny (29)
- Názov podskupiny alebo popis dielca (30)
- Číslo skupiny (31)
- Číslo zariadenia (32)
- Záhlavie informácií o skupine (33). Uvádza, či je časť nasledujúca pod záhlavím určená pre špecifický variant stroja, alebo či ide o zoznam spoločných dielcov. Ak má zoznam viac ako jeden variant a každý z variantov má vlastný výkres celkovej zostavy, uvádza sa odkaz na stranu s výkresom zostavy daného variantu.
- Interné informácie (34)

Uvod

Informacije o priročnikih

Tetra Pak priporoča, da natančno preberete vse priložene priročnike. Osebje, ki upravlja in vzdržuje opremo mora imeti dostop do priloženih priročnikov.

Katalog hranite v celotnem času uporabe opreme. V primeru, ko opremo pridobi drug imetnik ali uporabnik, mu obenem izročite tudi katalog.

Podjetje Tetra Pak ne prevzema odgovornosti za poškodbe na opremi, ki nastanejo zaradi neupoštevanja navodil iz priročnikov, ki so priloženi opremi.

Priloženi priročniki

Priročniki, ki so priloženi tej opremi, lahko vključujejo

- Priročnik za zamenjavo (CM)
  V tem priročniku so podatki, ki tehnikom omogočajo izvesti zamenjavo opreme med različnimi načini proizvodnje.
- Elektrotehnični priročnik (EM)
  Priročnik vsebuje podatke za tehnike o električnem sistemu opreme.
- Priročnik za montažo (IM)
  Priročnik vsebuje podatke, ki jih tehniki potrebujejo za varno montažo opreme.
- Priročnik za vzdrževanje (MM)
  Priročnik vsebuje podatke za tehnike o vzdrževanju opreme.
- Priročnik za obratovanje (OM)
  Priročnik je namenjen informiranju za pravilno rokovanje in upravljanje s strojem pred, med in po proizvodnem postopku.
- Katalog nadomestnih delov (SPC)
  Katalog vsebuje potrebne podatke za naročilo nadomestnih delov pri podjetju Tetra Pak.
- Tehnični priročnik (TeM)
  Priročnik
  - vsebuje podatke, ki jih tehniki potrebujejo za varno montažo opreme;
  - vsebuje podatke za tehnike o vzdrževanju opreme;
  - vsebuje podatke za tehnike o električnem sistemu stroja/opreme;
  - vsebuje potrebne podatke za naročilo nadomestnih delov pri podjetju Tetra Pak.

Postavitev strani

Poglejte sliko (A) na strani i-5: Glavne strani v Katalogu nadomestnih delov sestavljata stran s sliko (1) in ustrezna stran s seznamom (7). Številka strani (5) je prikazana na vrhu strani s sliko in na dnu strani s seznamom. Številka dokumenta (6) je prikazana na dnu strani s seznamom.

Številčenje strani

Oglejte si sliko (A) na strani i-5: Številka strani (5) ima tri dele:

- številko poglavja (2);
- zaporedno številko strani v poglavju (3);
- število vseh strani v poglavju (4).

Predstavitev stroja

Proizvajalec

Ime in naslov proizvajalca najdete na drugi strani kataloga.

Servisiranje

Za naročanje nadomestnih delov za stroj ter za sporočanje motenj pri delovanju stroja se obrnite na najbližjo servisno službo podjetja Tetra Pak.

V primeru drugih zahtev, komentarjev, predlogov za izboljšavo opreme ali dokumentacije se obrnite na odgovorno osebo.

Identifikacijska oznaka

CE-klasifikacija

Oprema je izdelana v skladu z osnovnimi zdravstvenimi in varnostnimi predpisi Evropskega gospodarskega prostora (EGS).

Napisna ploščica

Slika (B) na strani i-5 prikazuje primer napisne ploščice.
Sliko veljavne napisne ploščice in njeno mesto na opremi najdete v uvodnem poglavju priloženih priročnikov. Ploščica vsebuje spodaj navedene podatke, ki jih potrebujete, ko se v zvezi z določeno opremo obrnete na podjetje Tetra Pak:

- tip stroja (8);
- prostornino (9);
- specifikacije risbe (10);
- serijsko številko stroja (11);
- proizvajalca (12);
- oznako CE (13);
- leto izdelave (14).

Slika (C) na strani i-5 prikazuje primer specifikacije stroja. Podatki o opremi, navedeni na prvih straneh tega priročnika, se morajo ujemati s podatki o stroju, navedenimi na napisni ploščici in v specifikacijah.

Uporaba Kataloga nadomestnih delov

Iskanje številke nadomestnega dela

a) Oglejte si sliko (D) na strani i-5: Poiščite številko poglavja (15), navedeno poleg glavne skupine, ki vsebuje iskani del.

Točki b) in c) se nanašata na sliko (E) na strani i-6.

b) Na sliki glavne skupine poiščite podskupino stroja (17), ki vsebuje iskani del ali podskupino. Zapomnite si pozicijsko številko (18) in poiščite stran s seznamom, ki pripada sliki.

c) Poiščite pozicijsko številko/referenčno oznako (16) ali ime podskupine (19). Pojdite na stran (20), navedeno v desnem stolpcu. Tetra Pak za referenčno označevanje vedno uporablja funkcijsko strukturo. Predpona, ki označuje funkcijsko strukturo (=), ni prikazana v referenčni oznaki.

Točki d) in e) se nanašata na sliko (F) na strani i-6.

d) Na sliki podskupine poiščite del (21), ki ga iščete, in si zapomnite njegovo pozicijsko številko.

e) Številka (29) in opis dela (30) sta navedena poleg pozicijske številke na strani s seznamom.

Informacije v Katalogu nadomestnih delov

Spodnji seznam se nanaša na sliko (F) na strani i-6. Katalog nadomestnih delov vsebuje naslednje informacije o skupinah, podskupinah in nadomestnih delih za opremo:

- referenco strukture skupine (22); Označuje naslednjo višjo skupino v strukturi seznamov opreme.
- ime skupine (23);
- mersko enoto (25);
- količino (26);
- številko sestavne risbe (27);
- število strani seznama (28); Če je slika ali seznam skupine sestavljen iz več strani.
- številko dela ali podskupine (29);
- ime podskupine ali opis dela (30);
- številko skupine (31);
- številko opreme (32);
- naslov z informacijami o skupini (33). Označuje, ali je razdelek pod naslovom namenjen specifični izvedbi stroja ali gre za seznam skupnih delov. Če ima seznam več izvedb in če ima vsaka od njih svojo sestavno risbo, je ob vsaki izvedbi navedena referenčna stran s sestavno risbo.
- interne informacije (34).

Inledning

Information om manualen

Tetra Pak rekommenderar att alla manualer läses noggrant. Se till att manualerna är tillgängliga för personalen som använder eller underhåller utrustningen.

Det är viktigt att denna katalog behålls under utrustningens livslängd, och att den överlämnas till varje efterföljande innehavare eller användare av utrustningen.

Tetra Pak tar inte ansvar för någon skada på utrustningen som orsakats av att instruktionerna i medföljande manualer inte har följts.

Medföljande manualer

Följande manualer kan levereras tillsammans med utrustningen:

- CM
  Konverteringsmanualen (CM) innehåller information för tekniker om hur man konverterar utrustningen mellan olika produktionslägen.
- EM
  Den elektriska manualen (EM) innehåller information för tekniker om utrustningens elektriska system.
- IM
  Installationsmanualen (IM) innehåller information för tekniker om hur utrustningen installeras på ett säkert sätt.
- MM
  Underhållsmanualen (MM) innehåller information för tekniker om hur utrustningen underhålls.
- OM
  Driftsmanualen (OM) innehåller information för operatören om hur utrustningen ska hanteras före, under och efter produktion.
- SPC
  Reservdelskatalogen (SPC) innehåller den information som behövs för att beställa reservdelar från Tetra Pak.
- TeM
  Den tekniska manualen (TeM)
  - innehåller information för tekniker om hur utrustningen installeras på ett säkert sätt.
  - innehåller information för tekniker om hur utrustningen underhålls.
  - innehåller information för tekniker om maskinens/utrustningens elektriska system.
  - innehåller den information som behövs för att beställa reservdelar från Tetra Pak.

Sidlayout

Se bild (A) på sidan i-5: Huvudsidorna i reservdelskatalogen består av en bildsida (1) och en motsvarande listsida (7). Sidnumret (5) visas i sidhuvudet på bildsidan och i sidfoten på listsidan. Dokumentnumret (6) visas i sidfoten på listsidan.

Sidnumrering

Se bild (A) på sidan i-5: Ett sidnummer (5) består av tre delar:

- kapitlets nummer (2)
- löpande sidnummer inom kapitlet (3)
- totalt sidantal i kapitlet (4)

Introduktion till maskinen

Tillverkare

Tillverkarens namn och adress finns på sidan 2 i katalogen.

Service

För att beställa reservdelar till denna maskin eller för att rapportera problem som uppstått i samband med driften kontaktar du närmaste Tetra Pak-kontor.

Om du har andra frågor, kommentarer eller förslag till förbättringar av utrustningen och dokumentationen vänder du dig till din kontaktperson på Tetra Pak.

Identifiering

CE-märkning

Denna utrustning överensstämmer med den grundläggande hälso- och säkerhetslagstiftningen inom Europeiska ekonomiska samarbetsområdet (EES).

Maskinskylt

Bild (B) på sidan i-5 visar ett exempel på en maskinskylt.
En bild på giltig maskinskylt och dess placering på utrustningen visas i inledningskapitlet som medföljer utrustningen. Skylten innehåller de uppgifter som listas nedan och som behövs vid kontakt med Tetra Pak angående utrustningen.

- Maskintyp (8)
- Volym (9)
- Ritningsspecifikationer (10)
- Maskinnummer (11)
- Tillverkare (12)
- CE-märkning (13)
- Tillverkningsår (14)

Bild (C) på sidan i-5 visar ett exempel på en maskinspecifikation. Kontrollera att informationen om utrustningen som listas på de första sidorna i manualen motsvarar informationen på maskinskylten och i maskinspecifikationen.

Använda reservdelskatalogen

Hitta ett reservdelsnummer

a) Se bild (D) på sidan i-5: Gå till kapitelnumret (15) som står vid sidan om huvudgruppen som innehåller den del du vill hitta.

Punkt b) och c) hänvisar till bild (E) på sidan i-6.

b) På huvudgruppsbilden letar du efter den maskinundergrupp (17) som innehåller delen eller undergruppen du letar efter. Notera positionsnumret (18) och gå till listsidan som anges efter bilden.

c) Leta efter positionsnumret/referensbeteckningen (16) eller undergruppsnamnet (19). Gå till motsvarande sidnummer (20) som listas i den högra kolumnen. Tetra Pak har valt allt alltid använda en funktionsorienterad struktur för referensbeteckningarna. Prefixet för funktionsorienterad struktur (=) visas inte i referensbeteckningen.

Punkt d) och e) hänvisar till bild (F) på sidan i-6.

d) Leta reda på delen (21) i undergruppsbilden och notera delens positionsnummer.

e) Reservdelsnumret (29) och reservdelsbeskrivningen (30) står bredvid positionsnumret på listsidan.

Information i reservdelskatalogen

Listan nedan hänvisar till bild (F) på sidan i-6. Reservdelskatalogen innehåller följande information om grupper, undergrupper och reservdelar för utrustningen:

- Gruppstrukturreferens (22). Anger nästa högre grupp i utrustningslistans struktur.
- Gruppnamn (23)
- Måttenhet (25)
- Kvantitet (26)
- Monteringsritningsnummer (27)
- Listsideintervall (28). Anges om det finns flera sidor i gruppbilden eller grupplistan.
- Reservdels- eller undergruppsnummer (29)
- Undergruppsnamn eller reservdelsbeskrivning (30)
- Gruppnummer (31)
- Utrustningsnummer (32)
- Gruppinformationsrubrik (33). Anger om avsnittet under rubriken gäller en viss maskinvariant eller om det är en lista över allmänna delar. Om en lista har fler än en variant och varje variant har sin egen monteringsritning visas en sidhänvisning till variantens monteringsritning.
- Intern information (34)

SPC
Spare Parts Catalogue

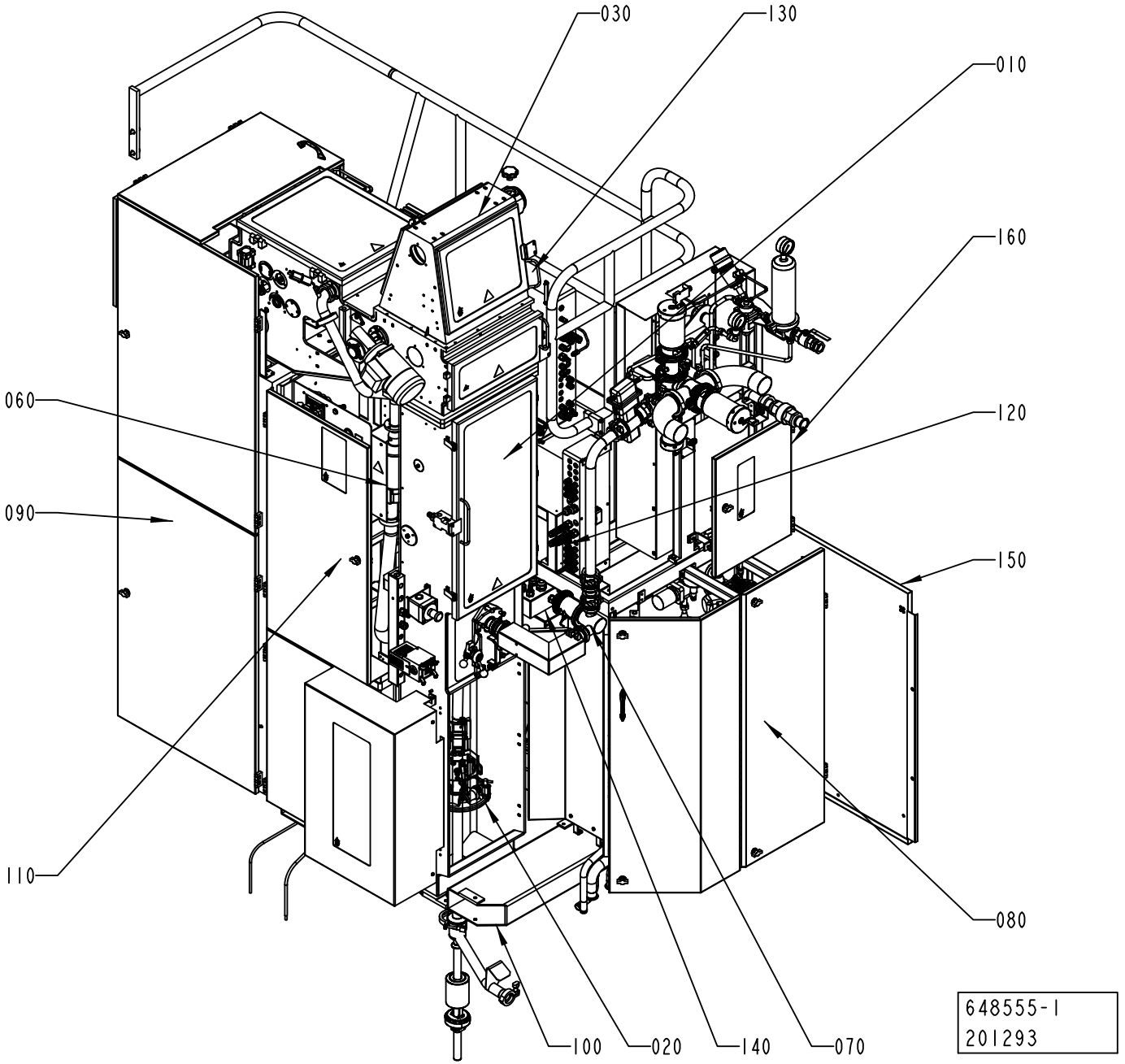
030
130
010
160
060
120
090
150
080
110
100
020
140
070
648555-1
201293

ECM: 290840 - 20070102
Group number: 648555-0100
Assembly Drawing: 648555-1_1_AC

Pos	Part No	UN	Qty	Description	Page No
-					
010	2539440-0100		1	ASEPTIC CHAMBER	**1-5**
020	2544850-0100		1	FORMING SECTION	**1-23, 1-25, 1-27, 1-29**
030	2539450-0200		1	DRYING CHAMBER	**1-131, 1-133**
060	2528076-0100		1	STERILE AIR SYSTEM	**1-203, 1-205**
070	2501290-0200		1	FILLING SYSTEM	**1-241, 1-243**
080	2512910-0300		1	CLEANING SYSTEM	**1-295**
090	2541680-0100		1	HYDROGEN PEROXIDE	**1-313**
100	1558497-0200		1	FRAME SECTION,UPPER	**1-331**
110	2528079-0200		1	PNEUMATIC SYSTEM	**1-353**
120	1558834-0200		1	CONNECTION BOX	**1-383**
130	1548733-0100		1	CONNECTION BOX	**1-387, 1-389, 1-391, 1-393**
140	2504502-0100		1	CABLE TRENCH	**1-399, 1-401, 1-403, 1-405**
150	2533766-0100		1	COVERING PANEL	**1-415**
160	2532909-0200		1	COVERING PANEL	**1-417**
170	2504496-0100		1	TRANSPORT EQUIPMENT	**1-423**

Pos	Part No	UN	Qty	Description	Page No

ASEPTIC CHAMBER

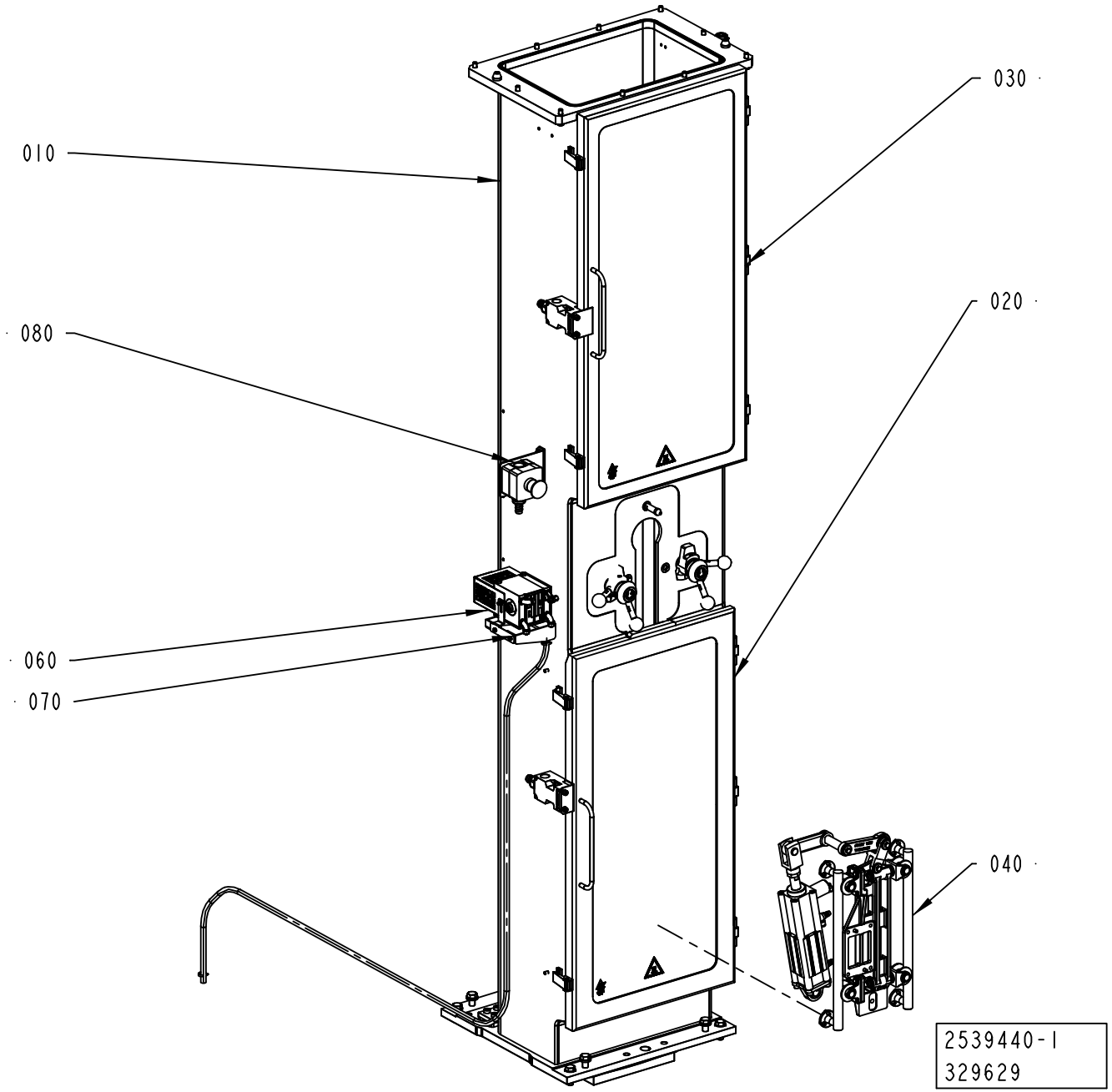

ECM: 341782 - 20080701
Group number: 2539440-0100
Assembly Drawing: 2539440-1_1_AD

Pos	Part No	UN	Qty	Description	Page No
A3/FLEX					
020	2508283-0250		1	DOOR	**1-7**
030	2508279-0150		1	DOOR	**1-9**
060	1548876-0100		1	IH EQUIPMENT	**1-11**
070	2937284-0100		1	DRAINING CONDENSE	**1-13**
Common Parts					
010	1548872-0100		1	PILLAR	**1-15, 1-17**
040	2512930-0200		1	SUPPORT RAIL	**1-19**
080	2528087-0100		1	EMERGENCY STOP	**1-21**

Pos	Part No	UN	Qty	Description	Page No

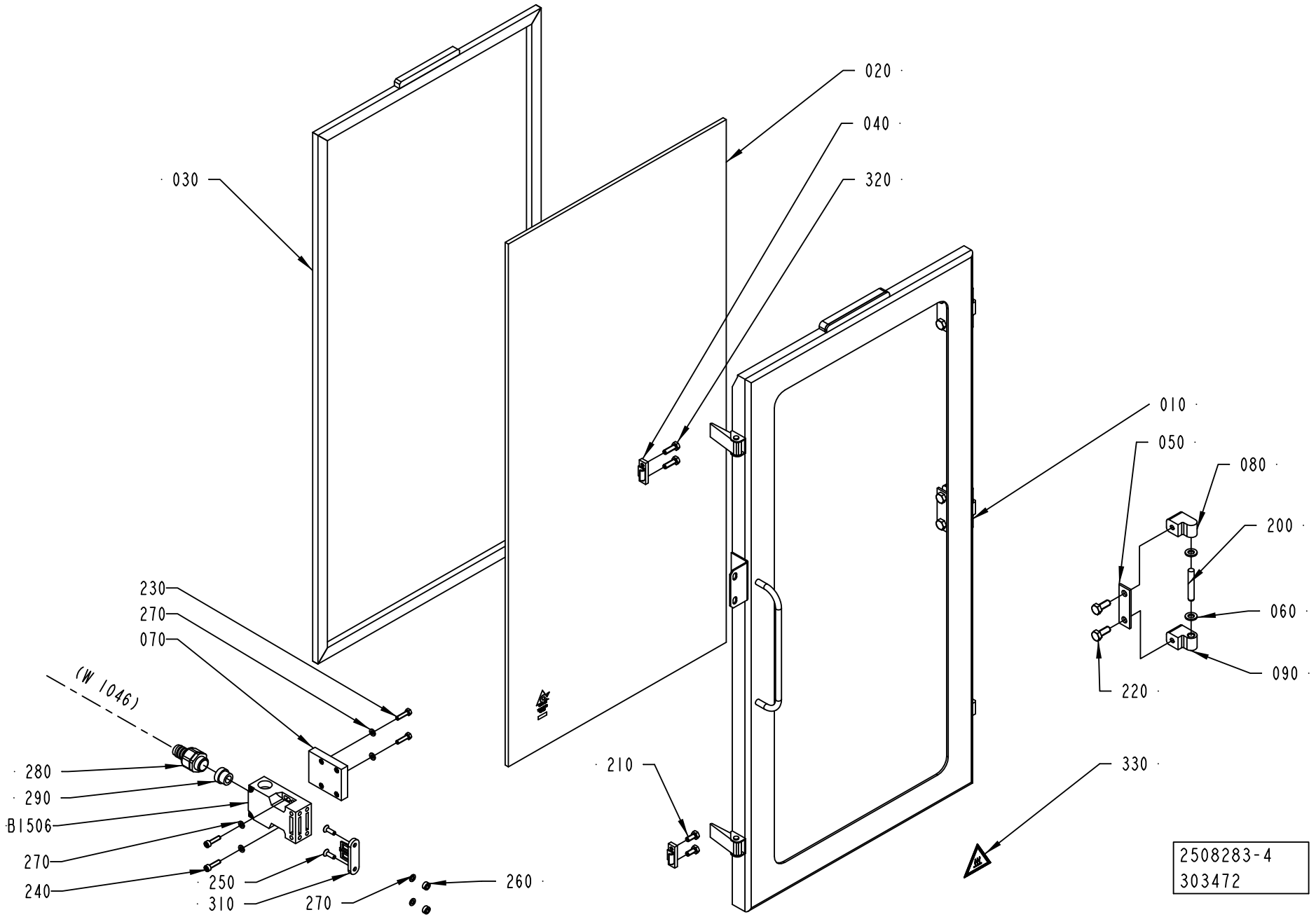
020
040
320
030
010
050
080
200
060
090
220
230
270
070
(W 1046)
280
290
B1506
270
240
250
310
270
260
210
330
2508283-4
303472

ECM: 389985 - 20090404
Group number: 2508283-0250
Assembly Drawing: 2508283-4_1_AA

Pos	Part No	UN	Qty	Description	Page No
-					
010	2695984-0000		1	FRAME	
020	2874752-0000		1	GLASS PANE	
030	2508285-0000		1	GASKET	
040	271860-0000		2	CLAMP BLOCK	
050	441737-0000		3	WASHER	
060	441739-0000		6	WASHER	
070	2541651-0000		1	PLATE	
080	1041978-0000		3	HINGE FLANGE	
090	1041979-0000		3	HINGE FLANGE	
200	311103-0413		3	PARALLEL PIN ISO 2338 8M6X50 A1	
210	312105-0367		2	SCREW M6S ISO 4017 M6X14 A480	
220	312105-0451		6	SCREW M6S ISO 4017 M8X20 A480	
230	312105-0331		2	SCREW M6S ISO 4017 M5X20 A480	
240	312115-0331		2	SCREW ISO4762 M5X20 A4 80	
250	312155-0329		2	SCREW DIN 7991 MF6S M5X16 A4 70	
260	575034-0000		2	ROUND NUT	
270	315105-0146		6	WASHER BRB 5,3X10 RFR	
280	90458-0429		1	HOSE GLAND W/O INSERT M20 EXTENDED	
290	353249-0011		1	INSERT, SINGLE HOLE, EK 153/11	
310	90044-0310		1	KEY FOR SAFETY SWITCH AZ 15/16 B1	
320	312105-0370		2	SCREW M6S ISO 4017 M6X20 A480	
330	359705-0007		1	WARNING SIGN ISO, HOT SURFACE	
B1506	90459-0472		1	KEY SAF.SW. AZ 16 02ZVRK-M20-2152-2254	

Pos	Part No	UN	Qty	Description	Page No

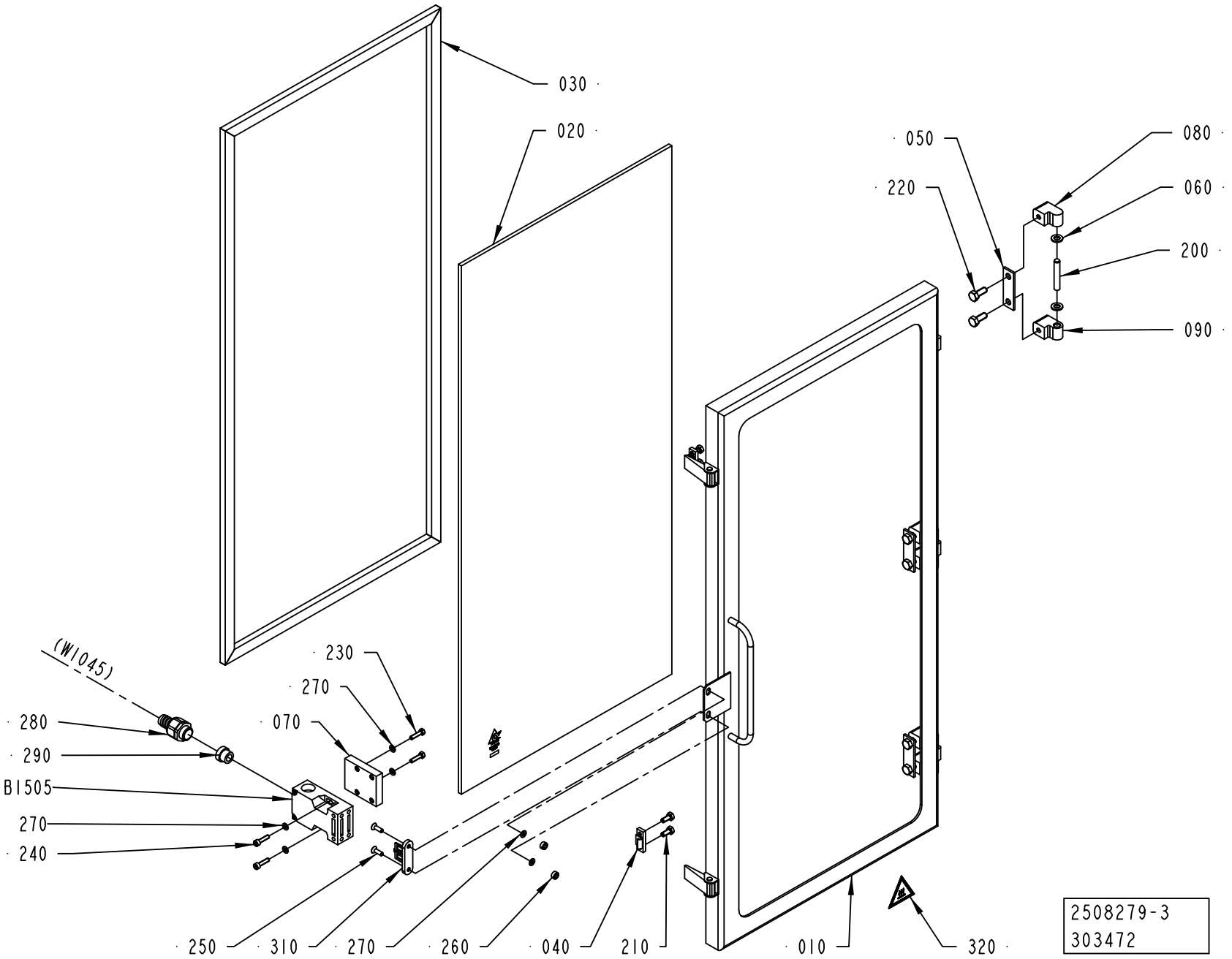
030
020
050
220
080
060
200
090
(W1045)
230
270
070
280
290
B1505
270
240
250
310
270
260
040
210
010
320
2508279-3
303472

ECM: 304246 - 20070417
Group number: 2508279-0150
Assembly Drawing: 2508279-3_1_AA

Pos	Part No	UN	Qty	Description	Page No
-					
010	2508280-0000		1	FRAME	
020	2874751-0000		1	GLASS PANE	
030	2508281-0000		1	GASKET	
040	271860-0000		2	CLAMP BLOCK	
050	441737-0000		3	WASHER	
060	441739-0000		6	WASHER	
070	2541651-0000		1	PLATE	
080	1041978-0000		3	HINGE FLANGE	
090	1041979-0000		3	HINGE FLANGE	
200	311103-0413		3	PARALLEL PIN ISO 2338 8M6X50 A1	
210	312105-0367		4	SCREW M6S ISO 4017 M6X14 A480	
220	312105-0451		6	SCREW M6S ISO 4017 M8X20 A480	
230	312105-0331		2	SCREW M6S ISO 4017 M5X20 A480	
240	312115-0331		2	SCREW ISO4762 M5X20 A4 80	
250	312155-0329		2	SCREW DIN 7991 MF6S M5X16 A4 70	
260	575034-0000		2	ROUND NUT	
270	315105-0146		6	WASHER BRB 5,3X10 RFR	
280	90458-0429		1	HOSE GLAND W/O INSERT M20 EXTENDED	
290	353249-0011		1	INSERT, SINGLE HOLE, EK 153/11	
310	90044-0310		1	KEY FOR SAFETY SWITCH AZ 15/16 B1	
320	359705-0007		1	WARNING SIGN ISO, HOT SURFACE	
B1505	90459-0472		1	KEY SAF.SW. AZ 16 02ZVRK-M20-2152-2254	

Pos	Part No	UN	Qty	Description	Page No

Machine Type	Group Description	Used-In	Group Number	Page No

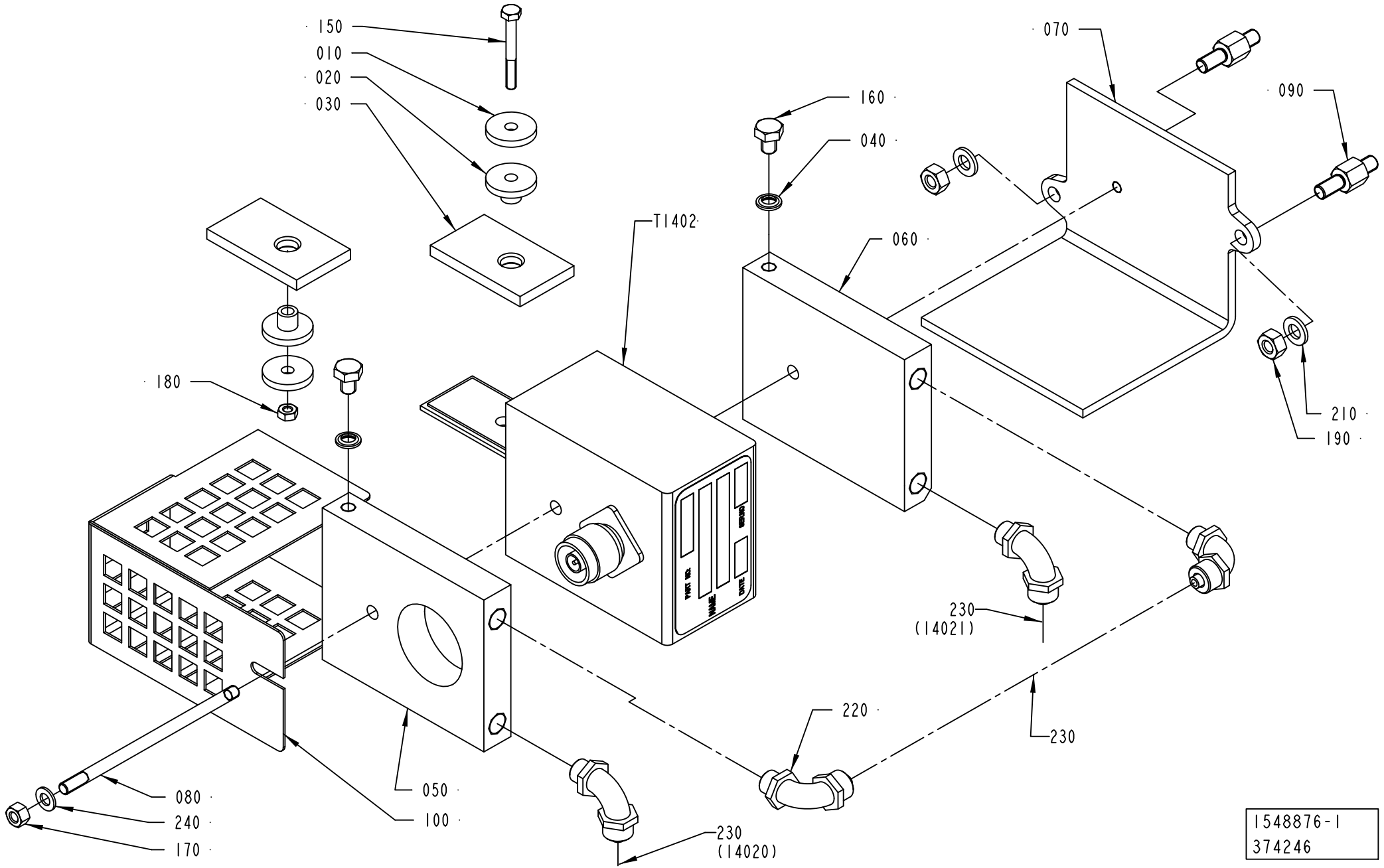
150
010
020
030
070
090
160
040
T1402
060
180
210
190
230
(14021)
220
230
080
240
170
050
100
230
(14020)
1548876-1
374246

ECM: 376422 - 20090401
Group number: 1548876-0100
Assembly Drawing: 1548876-1_1_AB

Pos	Part No	UN	Qty	Description	Page No
A3/FLEX TBA 0200B, A3/FLEX TBA 0250B, A3/FLEX TBA 0330S, A3/FLEX TPA 0330SQ, A3/FLEX TBA 0500S					
230	90166-0118	MM	6000	TUBE 8 MM PA BLACK	
T1402	67379-0412		1	TRANSFORMER	
A3/FLEX TBA 0200S, A3/FLEX TBA 1890S, A3/FLEX TBA 2000S, A3/FLEX TBA 0200M, A3/FLEX TBA 0250S, A3/FLEX TPA 0200SQ QC, A3/FLEX TPA 0250SQ QC, A3/FLEX TBA 0200SQ, A3/FLEX TBA 0250SQ, A3/FLEX TBA 1400B					
230	90166-0118	MM	6000	TUBE 8 MM PA BLACK	
T1402	67379-0414		1	TRANSFORMER	
A3/FLEX TBA 0500B, A3/FLEX TBA 1000B, A3/FLEX TPA 1000SQ, A3/FLEX TBA 1500S, A3/FLEX TPA 0750SQ, A3/FLEX TGA 1000SQ, A3/FLEX TGA 0500SQ, A3/FLEX TGA 0750SQ					
230	90166-0118	MM	6000	TUBE 8 MM PA BLACK	
T1402	67379-0417		1	TRANSFORMER	
A3/FLEX TBA 1000S DIMC/FLEX					
230	90166-0118	MM	6000	TUBE 8 MM PA BLACK	
T1402	67379-0405		1	TRANSFORMER	
A3/FLEX TBA 1000S NODIMC					
230	90166-0118	MM	6000	TUBE 8 MM PA BLACK	
T1402	67379-0404		1	TRANSFORMER	
A3/FLEX TBA 1000SQ, A3/FLEX TPA 0500SQ, A3/FLEX TBA 0500SQ					
230	90166-0118	MM	6000	TUBE 8 MM PA BLACK	
T1402	67379-0407		1	TRANSFORMER	
Common Parts					
010	263311-0000		2	WASHER	
020	1539174-0000		2	BUSHING	
030	1539175-0000		2	PLATE	
040	315211-0103		2	BONDED SEAL SS/NBR90 M6	
050	1558830-0000		1	COOLING PLATE	
060	1558831-0000		1	COOLING PLATE	
070	1558441-0000		1	BRACKET	
080	2559066-0000		1	STUD SCREW	
090	2532979-0000		2	SPACER	
100	2541664-0000		1	COVER	
150	312105-0301		1	SCREW M6S ISO 4017 M4X35 A470	
160	312105-0362		2	SCREW M6S ISO 4017 M6X8 A480	
170	312605-0314		1	HEXAGON NUT, M6M M5 A280	
180	312605-0312		1	HEXAGON NUT, M6M M4 A280	
190	312605-0316		2	HEXAGON NUT, M6M M6 A280	
210	315105-0153		2	WASHER BRB 6,4X12 RFR	
220	342931-0121		4	ELBOW 90 COUPL.,EXT.THREAD 8/6-G1/8"	
240	315105-0146		1	WASHER BRB 5,3X10 RFR	
250	90157-0037		1	THREAD SEALANT LOCTITE 542	

Pos	Part No	UN	Qty	Description	Page No

Machine Type | Group Description | Used-In | Group Number | Page No

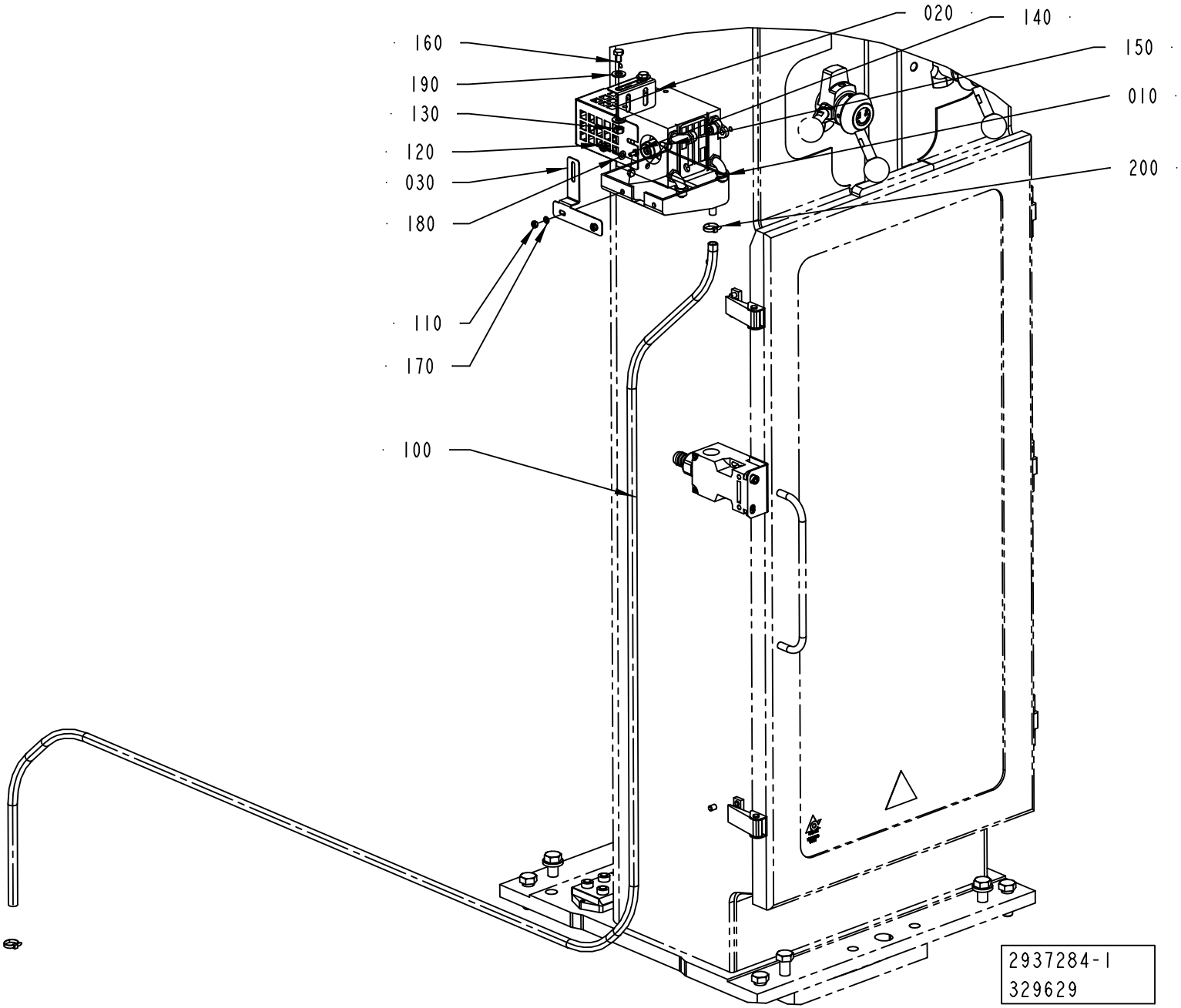
020
140
150
160
190
010
130
120
200
030
180
110
170
100
2937284-1
329629

ECM: 339112 - 20080703
Group number: 2937284-0100
Assembly Drawing: 2937284-1_1_AA

Pos	Part No	UN	Qty	Description	Page No
-					
010	2934368-0000		1	PROTECTION	
020	2934366-0000		1	BRACKET	
030	2934367-0000		1	BRACKET	
100	90166-0008	MM	3000	HOSE 7/10 PVC TRANSP.	
110	312605-0312		2	HEXAGON NUT, M6M M4 A280	
120	312605-0314		2	HEXAGON NUT, M6M M5 A280	
130	312605-0316		2	HEXAGON NUT, M6M M6 A280	
140	312105-0287		2	SCREW M6S ISO 4017 M4X8 A470	
150	312105-0325		2	SCREW M6S ISO 4017 M5X10 A480	
160	312105-0364		2	SCREW M6S ISO 4017 M6X10 A480	
170	315105-0136		2	WASHER BRB 4,3X8 RFR	
180	315105-0146		2	WASHER BRB 5,3X10 RFR	
190	315105-0165		4	WASHER BRB 8,4X16 RFR	
200	352113-0101		2	CABLE TIE, BLACK 92X2,5 MM	

Pos	Part No	UN	Qty	Description	Page No

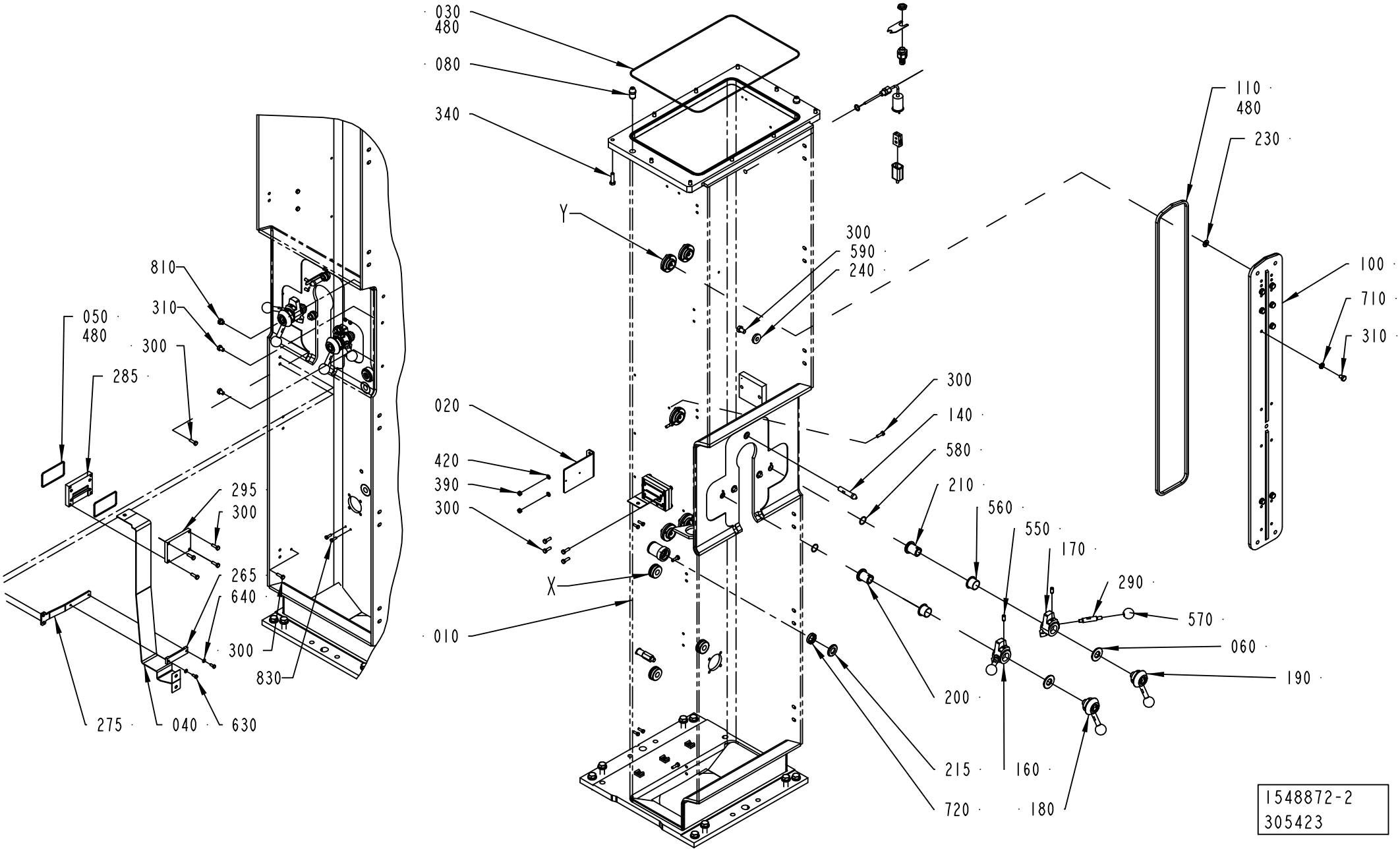
030
480
080
340
Y
300
590
240
020
420
390
300
X
010
810
310
050
480
300
285
295
300
265
640
300
830
275
040
630
110
480
230
100
710
310
300
140
580
210
560
550
170
290
570
060
190
200
215
160
720
180
1548872-2
305423

ECM: 393201 - 20090404
Group number: 1548872-0100
Assembly Drawing: 1548872-2_1_AG

This list covers pages from 1-14 to 1-17

Pos	Part No	UN	Qty	Description	Page No
A3/FLEX (See drawing on pages: 1-14, 1-16)					
010	1558513-0000		1	PILLAR	
040	2863174-0000		1	BUSBAR	
050	90459-1174		2	O-RING 75,87X2,62 MM	
150	1036293-0000		1	HOLDER	
265	2532978-0000		1	PLATE	
275	2532977-0000		1	BRACKET	
285	2533628-0000		1	SUPPORT BLOCK	
295	2533627-0000		1	SUPPORT BLOCK	
300	312105-0370		12	SCREW M6S ISO 4017 M6X20 A480	
310	312105-0447		16	SCREW M6S ISO 4017 M8X12 A480	
390	312605-0316		2	HEXAGON NUT, M6M M6 A280	
420	315105-0153		2	WASHER BRB 6,4X12 RFR	
490	90099-0104		1	NUT, PR 15,2 (PG9)	
500	353243-0001		1	HOSE GLAND W/O INSERT PG9 EXTENDED	
510	353249-0008		1	INSERT, SINGLE HOLE, EK 152/7	
520	90326-0020		1	PLUG, FEMALE YELLOW CR-AL	
530	90326-0012		1	PROTECTIVE COVER, T31A4618	
540	315237-0110		1	WASHER,PL.RND.AL.13,5/18,H=1,5	
600	312105-0325		15	SCREW M6S ISO 4017 M5X10 A480	
630	312105-0327		2	SCREW M6S ISO 4017 M5X12 A480	
640	315105-0146		2	WASHER BRB 5,3X10 RFR	
830	312105-0329		4	SCREW M6S ISO 4017 M5X16 A480	
B1109	90458-0341		1	THERMOCOUPLE, 5130050-001	
Common Parts					
020	2528088-0000		1	HOLDER	
030	90459-1175		1	O-RING 418X3,0 MM	
060	2562677-0000		2	WASHER	
080	1519150-0000		2	PIN	
100	2528111-0000		1	PLATE	
110	2634997-0000		1	GASKET	
120	2544865-0000		1	BUSHING	
140	2506283-0000		1	PIN	
160	2526859-0000		1	CAM	
170	2528068-0000		1	CAM	
180	2528070-0000		1	LOCKING LEVER	
190	2528102-0000		1	LOCKING LEVER	
200	2512769-0000		1	SHAFT	
210	2512768-0000		1	SHAFT	
215	2544866-0000		1	WASHER	
220	2512774-0000		4	SHIM	
230	2528107-0000		5	SHIM	
235	2541645-0000		4	SHIM	
240	315125-0173		2	WASHER TBRSB 10,5X28X6 A4	
245	2541646-0000		5	SHIM	
255	2547386-0000		1	SHAFT	
280	2528106-0000		5	FLANGE	
290	2526858-0000		2	DOWEL	
320	312105-0449		5	SCREW M6S ISO 4017 M8X16 A480	
340	312105-0455		10	SCREW M6S ISO 4017 M8X30 A480	
360	312105-0536		4	SCREW M6S ISO 4017 M12X30 A480	
370	312105-0538		4	SCREW M6S ISO 4017 M12X35 A480	
380	312125-0366		3	SCREW ISO 1207 M6X12 A4	
450	315115-0178		8	WASHER PLAIN, TBRB 13/24 H=4	
460	352113-0204		3	ANCHOR PLATES FOR STRIPS, TYPE TM3S25-M	
480	90153-0023		1	ADHESIVE, SILICON 251470 TUB 90CC(UN1993	
550	90287-0112		2	SCREW SPRINGLOAD. SLOTTED HEAD M8X16	
560	90240-0293		2	FLANGE BUSHING, 25X28X21 MM	
570	318800-0104		2	HANDLE,SPHERICAL KNOB,INT.THRE.,D.30-M8	
580	315205-0707		2	O-RING 20,35X1,78 MM	
590	312105-0489		2	SCREW M6S ISO 4017 M10X16 A480	
670	315751-0113		1	RETAINING RING FOR SHAFT DIN 471 16 SS	
710	315115-0165		16	WASHER PLAIN, TBRB 8,4/16 H=3	
720	90459-0871		1	SEALING RING 18X30X7 MM	

Machine Type | Group Description | Used-In | Group Number | Page No

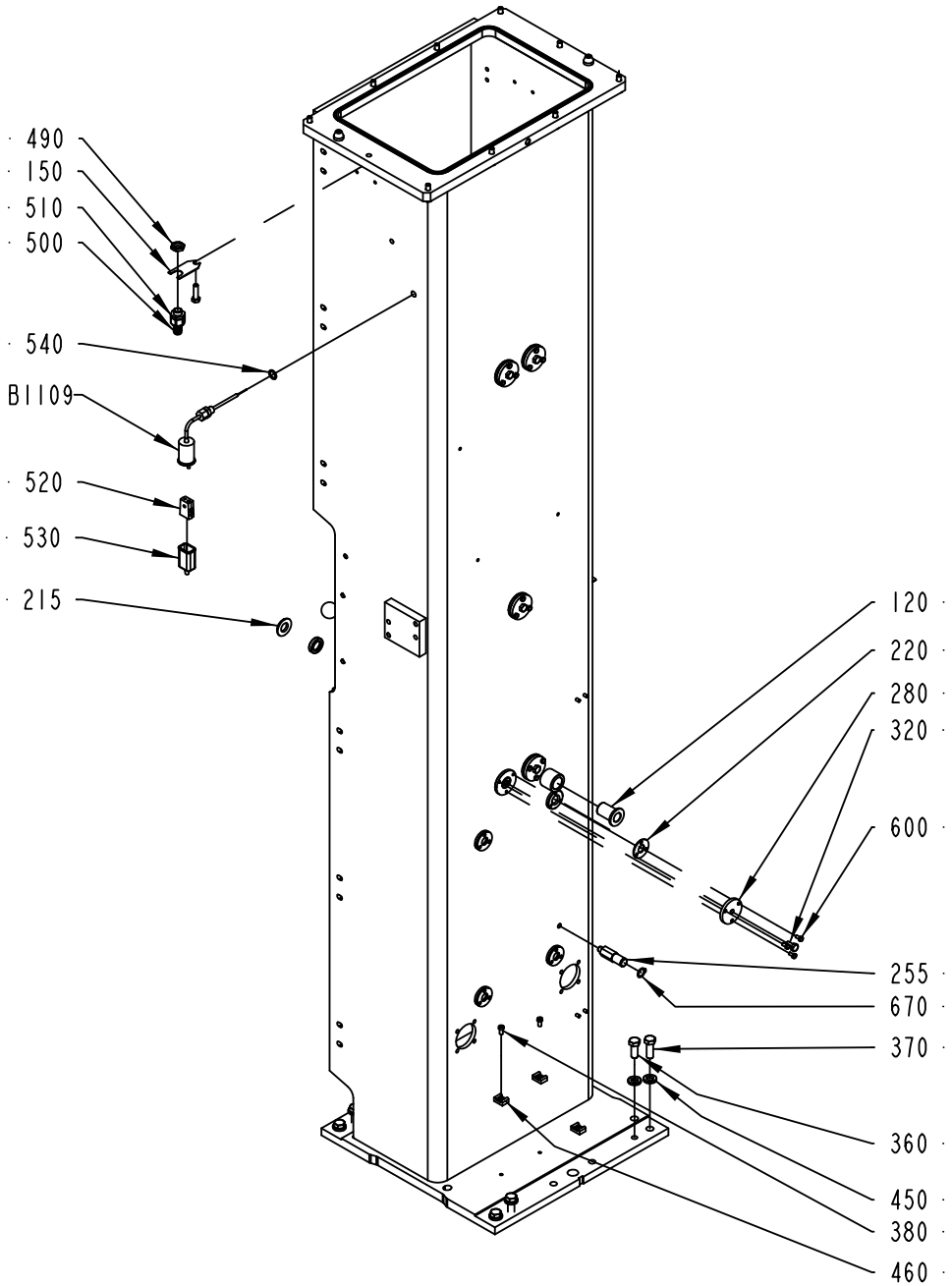
490
150
510
500
540
B1109
520
530
215
120
220
280
320
600
255
670
370
360
450
380
460
1548872-2
305423

ECM: 393201 - 20090404
Group number: 1548872-0100
Assembly Drawing: 1548872-2_2_AG

This list covers pages from 1-14 to 1-17

Pos	Part No	UN	Qty	Description	Page No
A3/FLEX (See drawing on pages: 1-14, 1-16)					
010	1558513-0000		1	PILLAR	
040	2863174-0000		1	BUSBAR	
050	90459-1174		2	O-RING 75,87X2,62 MM	
150	1036293-0000		1	HOLDER	
265	2532978-0000		1	PLATE	
275	2532977-0000		1	BRACKET	
285	2533628-0000		1	SUPPORT BLOCK	
295	2533627-0000		1	SUPPORT BLOCK	
300	312105-0370		12	SCREW M6S ISO 4017 M6X20 A480	
310	312105-0447		16	SCREW M6S ISO 4017 M8X12 A480	
390	312605-0316		2	HEXAGON NUT, M6M M6 A280	
420	315105-0153		2	WASHER BRB 6,4X12 RFR	
490	90099-0104		1	NUT, PR 15,2 (PG9)	
500	353243-0001		1	HOSE GLAND W/O INSERT PG9 EXTENDED	
510	353249-0008		1	INSERT, SINGLE HOLE, EK 152/7	
520	90326-0020		1	PLUG, FEMALE YELLOW CR-AL	
530	90326-0012		1	PROTECTIVE COVER, T31A4618	
540	315237-0110		1	WASHER,PL.RND.AL.13,5/18,H=1,5	
600	312105-0325		15	SCREW M6S ISO 4017 M5X10 A480	
630	312105-0327		2	SCREW M6S ISO 4017 M5X12 A480	
640	315105-0146		2	WASHER BRB 5,3X10 RFR	
830	312105-0329		4	SCREW M6S ISO 4017 M5X16 A480	
B1109	90458-0341		1	THERMOCOUPLE, 5130050-001	
Common Parts					
020	2528088-0000		1	HOLDER	
030	90459-1175		1	O-RING 418X3,0 MM	
060	2562677-0000		2	WASHER	
080	1519150-0000		2	PIN	
100	2528111-0000		1	PLATE	
110	2634997-0000		1	GASKET	
120	2544865-0000		1	BUSHING	
140	2506283-0000		1	PIN	
160	2526859-0000		1	CAM	
170	2528068-0000		1	CAM	
180	2528070-0000		1	LOCKING LEVER	
190	2528102-0000		1	LOCKING LEVER	
200	2512769-0000		1	SHAFT	
210	2512768-0000		1	SHAFT	
215	2544866-0000		1	WASHER	
220	2512774-0000		4	SHIM	
230	2528107-0000		5	SHIM	
235	2541645-0000		4	SHIM	
240	315125-0173		2	WASHER TBRSB 10,5X28X6 A4	
245	2541646-0000		5	SHIM	
255	2547386-0000		1	SHAFT	
280	2528106-0000		5	FLANGE	
290	2526858-0000		2	DOWEL	
320	312105-0449		5	SCREW M6S ISO 4017 M8X16 A480	
340	312105-0455		10	SCREW M6S ISO 4017 M8X30 A480	
360	312105-0536		4	SCREW M6S ISO 4017 M12X30 A480	
370	312105-0538		4	SCREW M6S ISO 4017 M12X35 A480	
380	312125-0366		3	SCREW ISO 1207 M6X12 A4	
450	315115-0178		8	WASHER PLAIN, TBRB 13/24 H=4	
460	352113-0204		3	ANCHOR PLATES FOR STRIPS, TYPE TM3S25-M	
480	90153-0023		1	ADHESIVE, SILICON 251470 TUB 90CC(UN1993	
550	90287-0112		2	SCREW SPRINGLOAD. SLOTTED HEAD M8X16	
560	90240-0293		2	FLANGE BUSHING, 25X28X21 MM	
570	318800-0104		2	HANDLE,SPHERICAL KNOB,INT.THRE.,D.30-M8	
580	315205-0707		2	O-RING 20,35X1,78 MM	
590	312105-0489		2	SCREW M6S ISO 4017 M10X16 A480	
670	315751-0113		1	RETAINING RING FOR SHAFT DIN 471 16 SS	
710	315115-0165		16	WASHER PLAIN, TBRB 8,4/16 H=3	
720	90459-0871		1	SEALING RING 18X30X7 MM	

Machine Type	Group Description	Used-In	Group Number	Page No

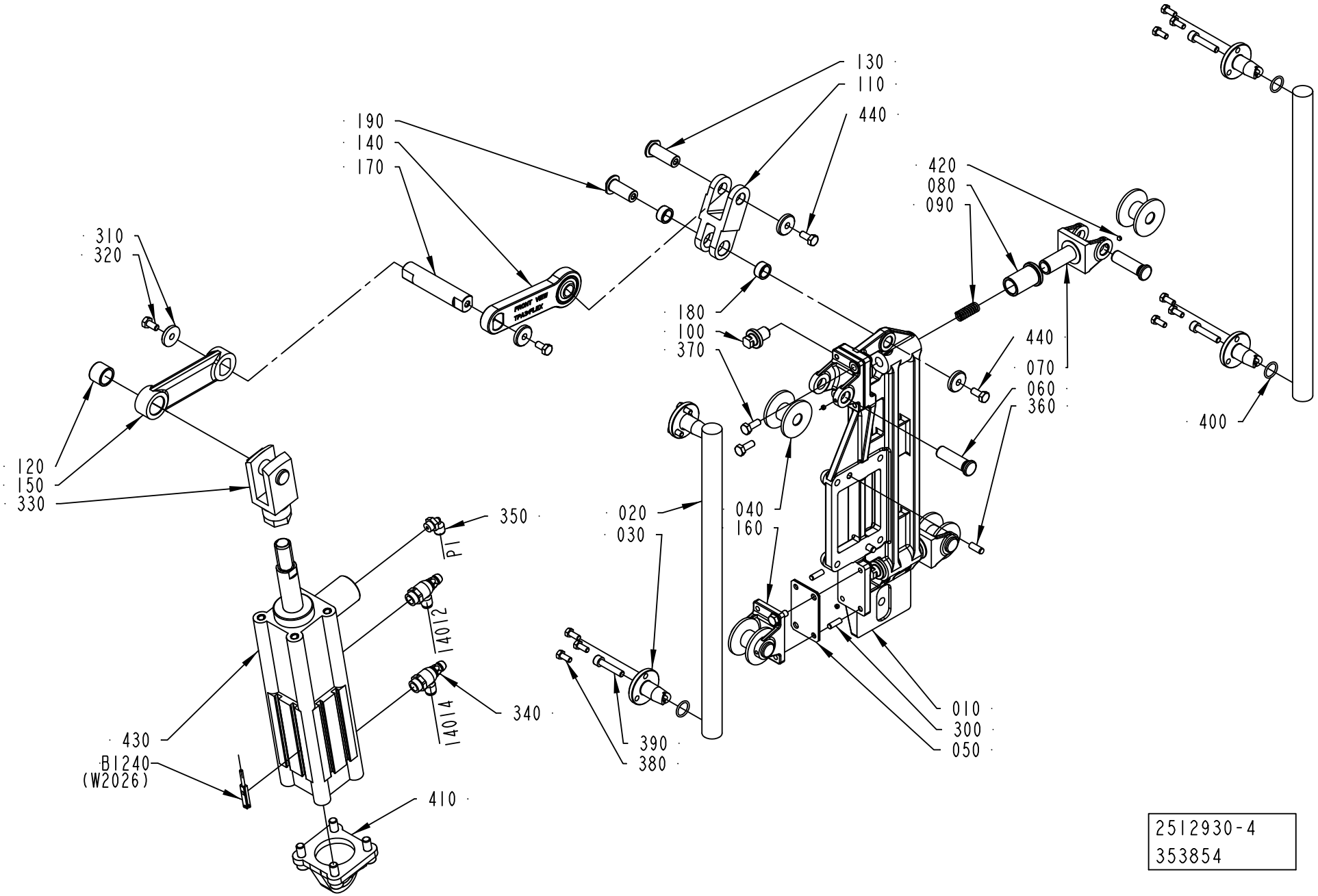
130
110
440
190
140
170
420
080
090
310
320
180
100
370
440
070
060
360
400
120
150
330
350
P1
020
030
040
160
14012
14014
340
430
B1240
(W2026)
410
390
380
010
300
050
2512930-4
353854

ECM: 383962 - 20090701
Group number: 2512930-0200
Assembly Drawing: 2512930-4_1_AB

Pos	Part No	UN	Qty	Description	Page No
A3/FLEX					
110	2731434-0000		1	LEVER	
Common Parts					
010	2547401-0000		1	SUPPORT PLATE	
020	2504521-0000		2	BAR	
030	2504523-0000		4	CENTERING	
040	2547403-0000		4	WHEEL	
050	2547419-0000		2	SHIM	
060	2526841-0000		4	SHAFT	
070	2552121-0000		2	BRACKET	
080	2522233-0000		2	BUSHING	
090	2522235-0000		2	COMPRESSION SPRING	
100	2541658-0000		2	SCREW	
120	2506269-0000		1	BUSHING	
130	2709262-0000		1	SHAFT	
140	2715618-0000		1	LEVER	
150	2506273-0000		1	LEVER	
160	2547402-0000		2	BRACKET	
170	2715601-0000		1	SHAFT	
180	2506291-0000		2	BUSHING	
190	2751466-0000		1	SHAFT	
300	311103-0308		4	PARALLEL PIN ISO 2338 5M6X16 A1	
310	315125-0153		4	WASHER TBRSB 6,4X22X4 A4	
320	312105-0366		2	SCREW M6S ISO 4017 M6X12 A480	
330	2547387-0000		1	ROD END	
340	90235-0847		2	THROTTLE CHECK VALVE, G1/4", MANUAL,6	
350	90458-2956		1	ELBOW PIPE JOINT, EXT.THREAD, D=6MM-G1/8	
360	311103-0351		2	PARALLEL PIN ISO 2338 6M6X16 A1	
370	312105-0368		4	SCREW M6S ISO 4017 M6X16 A480	
380	312105-0327		12	SCREW M6S ISO 4017 M5X12 A480	
390	312115-0374		4	SCREW ISO4762 M6X30 A4 80	
400	315205-0703		4	O-RING 14,0X1,78 MM	
410	90459-0586		1	SWIVEL FLANGE 50	
420	90459-1395		4	SCREW HEX.SOCK.SET CONEPT.MS6SS M4X4 A2	
430	90459-0587		1	DOUBLE ACTING, PROFILE, CYL 50-50	
440	312105-0367		2	SCREW M6S ISO 4017 M6X14 A480	
B1240	90458-2775		1	PROX.SENSOR SMT-8-PS-K5-LED-24-B	

Pos	Part No	UN	Qty	Description	Page No

Machine Type | Group Description | Used-In | Group Number | Page No

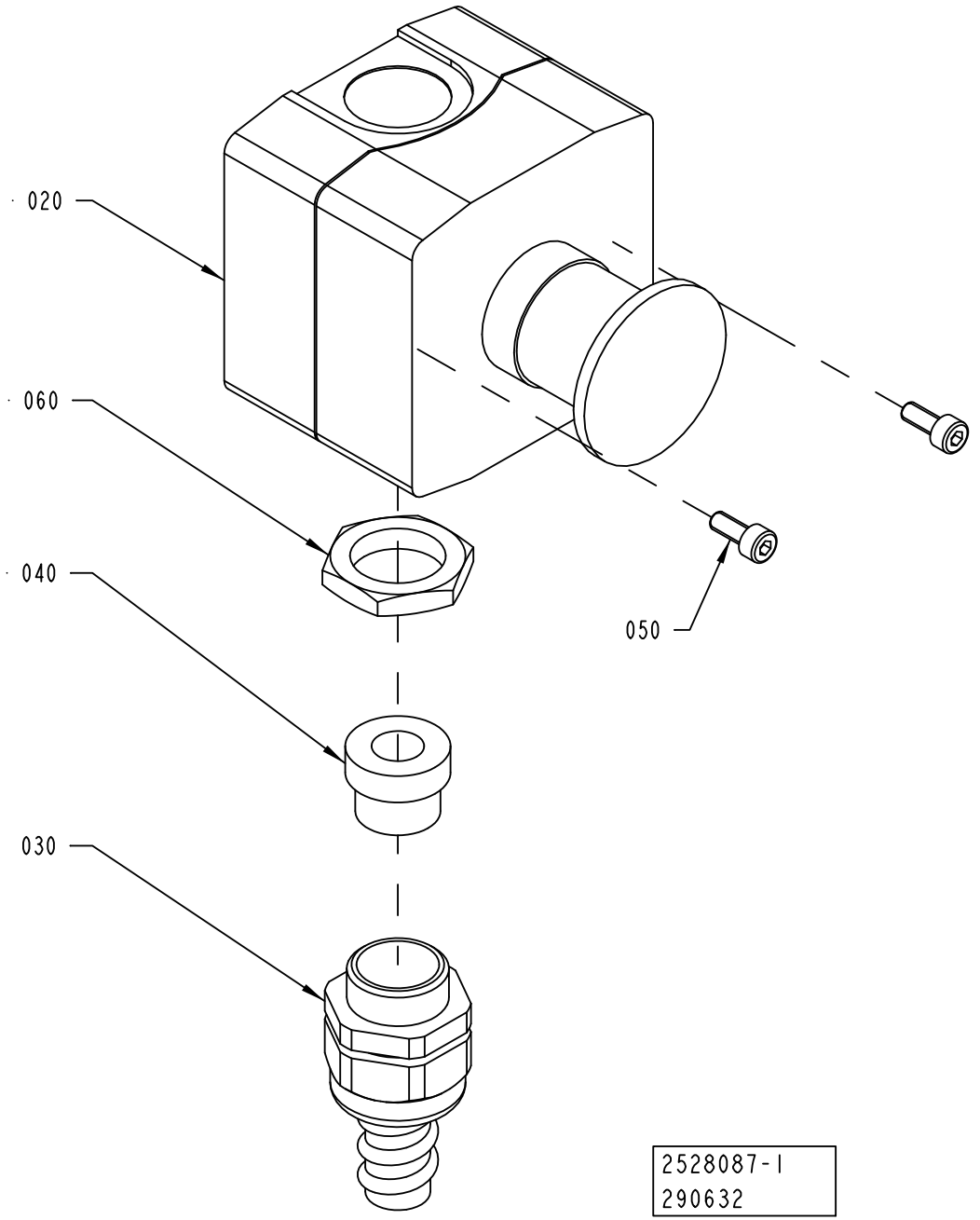
020
060
040
050
030
2528087-1
290632

ECM: 387766 - 20090402
Group number: 2528087-0100
Assembly Drawing: 2528087-1_1_AB

Pos	Part No	UN	Qty	Description	Page No
-					
020	90459-1130		1	EM. STOP XAL-K178F	
030	353243-0009		1	HOSE GLAND W/O INSERT PG13,5 EXTENDED	
040	353249-0011		1	INSERT, SINGLE HOLE, EK 153/11	
050	312115-0289		2	SCREW ISO4762 M4X10 A4 80	
060	90099-0118		1	NUT, PR 20,4 (PG13,5)	

Pos	Part No	UN	Qty	Description	Page No

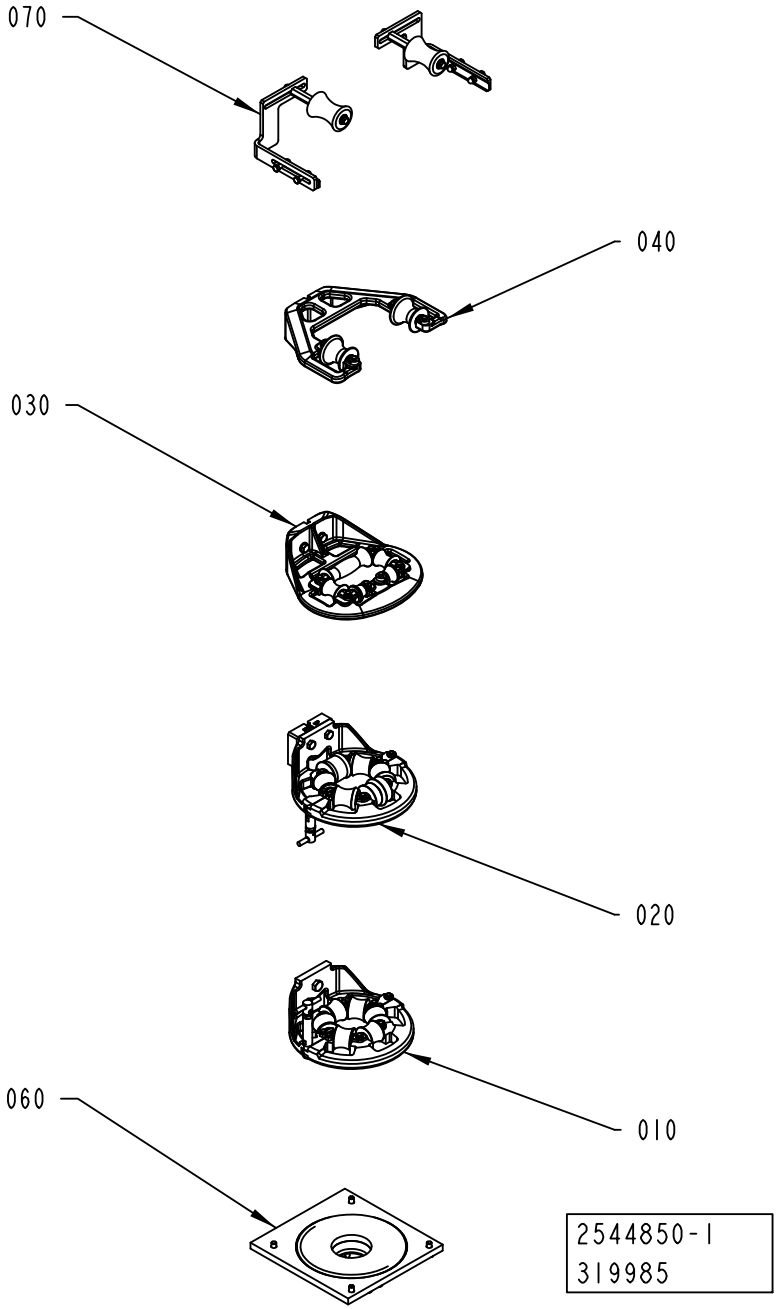
070
040
030
020
010
060
2544850-1
319985

Pos	Part No	UN	Qty	Description	Page No
A3/FLEX DIMC/FLEX (See drawing on page: 1-24)					
010	2559063-0200		1	LOWER FORMING RING	**1-31, 1-33, 1-35, 1-37**
020	2559061-0200		1	UPPER FORMING RING	**1-39, 1-41, 1-43, 1-45**
030	2592550-0100		1	FORMING RING	**1-47, 1-49, 1-51**
050	2657873-0100		1	LONGITUDINAL SEALING	**1-53, 1-55, 1-57**
060	2559064-0100		1	SEAL	**1-61, 1-63, 1-65, 1-67, 1-69**
070	2541634-0100		1	EDGE ROLLER	**1-71, 1-73**
A3/FLEX TBA 0200S NODIMC, A3/FLEX TBA 0200B NODIMC, A3/FLEX TBA 0250B NODIMC, A3/FLEX TBA 0330S NODIMC, A3/FLEX TPA 0200SQ NODIMC, A3/FLEX TPA 0250SQ NODIMC (See drawing on page: 1-22)					
010	2559062-0200		1	LOWER FORMING RING	**1-75, 1-77, 1-79, 1-81, 1-83, 1-85**
020	2547422-0200		1	UPPER FORMING RING	**1-87, 1-89, 1-91, 1-93, 1-95, 1-97, 1-99, 1-101, 1-103**
030	2547421-0100		1	FORMING RING	**1-105, 1-107, 1-109, 1-111**
040	2674188-0100		1	EDGE ROLLER	**1-113, 1-115**
050	2657873-0100		1	LONGITUDINAL SEALING	**1-53, 1-55, 1-57**
060	2512780-0100		1	SEAL	**1-117, 1-119, 1-121**
070	2541634-0100		1	EDGE ROLLER	**1-71, 1-73**
A3/FLEX TBA 0200SQ NODIMC, A3/FLEX TBA 0250SQ NODIMC (See drawing on page: 1-24)					
010	2559062-0200		1	LOWER FORMING RING	**1-75, 1-77, 1-79, 1-81, 1-83, 1-85**
020	2547422-0200		1	UPPER FORMING RING	**1-87, 1-89, 1-91, 1-93, 1-95, 1-97, 1-99, 1-101, 1-103**
030	2547421-0100		1	FORMING RING	**1-105, 1-107, 1-109, 1-111**
050	2657873-0100		1	LONGITUDINAL SEALING	**1-53, 1-55, 1-57**
060	2512780-0100		1	SEAL	**1-117, 1-119, 1-121**
070	2541634-0100		1	EDGE ROLLER	**1-71, 1-73**
A3/FLEX TBA 0250S NODIMC, A3/FLEX TBA 0200M NODIMC (See drawing on page: 1-22)					
010	2559062-0200		1	LOWER FORMING RING	**1-75, 1-77, 1-79, 1-81, 1-83, 1-85**
020	2547422-0200		1	UPPER FORMING RING	**1-87, 1-89, 1-91, 1-93, 1-95, 1-97, 1-99, 1-101, 1-103**
030	2547421-0100		1	FORMING RING	**1-105, 1-107, 1-109, 1-111**
040	2674188-0100		1	EDGE ROLLER	**1-113, 1-115**
050	2657873-0100		1	LONGITUDINAL SEALING	**1-53, 1-55, 1-57**
060	2512780-0100		1	SEAL	**1-117, 1-119, 1-121**
070	2541634-0100		1	EDGE ROLLER	**1-71, 1-73**
A3/FLEX TBA 0500S NODIMC (See drawing on page: 1-24)					
010	2559062-0200		1	LOWER FORMING RING	**1-75, 1-77, 1-79, 1-81, 1-83, 1-85**
020	2547422-0200		1	UPPER FORMING RING	**1-87, 1-89, 1-91, 1-93, 1-95, 1-97, 1-99, 1-101, 1-103**
030	2547421-0100		1	FORMING RING	**1-105, 1-107, 1-109, 1-111**
050	2657873-0100		1	LONGITUDINAL SEALING	**1-53, 1-55, 1-57**
060	2512780-0100		1	SEAL	**1-117, 1-119, 1-121**
070	2541634-0100		1	EDGE ROLLER	**1-71, 1-73**
A3/FLEX TBA 1000B NODIMC, A3/FLEX TBA 0500B NODIMC (See drawing on page: 1-24)					
010	2559062-0200		1	LOWER FORMING RING	**1-75, 1-77, 1-79, 1-81, 1-83, 1-85**
020	2547422-0200		1	UPPER FORMING RING	**1-87, 1-89, 1-91, 1-93, 1-95, 1-97, 1-99, 1-101, 1-103**
030	2547421-0100		1	FORMING RING	**1-105, 1-107, 1-109, 1-111**
050	2657873-0100		1	LONGITUDINAL SEALING	**1-53, 1-55, 1-57**
060	2512780-0100		1	SEAL	**1-117, 1-119, 1-121**
070	2541634-0100		1	EDGE ROLLER	**1-71, 1-73**
090	2555627-0100		1	PRESSURE ROLLER	**1-123**
A3/FLEX TBA 1000SQ NODIMC, A3/FLEX TBA 1000S NODIMC, A3/FLEX TBA 1500S NODIMC, A3/FLEX TBA 0500SQ NODIMC (See drawing on page: 1-24)					
010	2559062-0200		1	LOWER FORMING RING	**1-75, 1-77, 1-79, 1-81, 1-83, 1-85**
020	2547422-0200		1	UPPER FORMING RING	**1-87, 1-89, 1-91, 1-93, 1-95, 1-97, 1-99, 1-101, 1-103**
030	2547421-0100		1	FORMING RING	**1-105, 1-107, 1-109, 1-111**
050	2657873-0100		1	LONGITUDINAL SEALING	**1-53, 1-55, 1-57**
060	2512780-0100		1	SEAL	**1-117, 1-119, 1-121**
070	2541634-0100		1	EDGE ROLLER	**1-71, 1-73**
A3/FLEX TBA 2000S NODIMC, A3/FLEX TBA 1890S NODIMC, A3/FLEX TBA 1400B NODIMC (See drawing on page: 1-26)					
010	2559062-0200		1	LOWER FORMING RING	**1-75, 1-77, 1-79, 1-81, 1-83, 1-85**
020	2547422-0200		1	UPPER FORMING RING	**1-87, 1-89, 1-91, 1-93, 1-95, 1-97, 1-99, 1-101, 1-103**
030	2547421-0100		1	FORMING RING	**1-105, 1-107, 1-109, 1-111**
040	2547420-0100		1	EDGE ROLLER	**1-125, 1-127, 1-129**
050	2657873-0100		1	LONGITUDINAL SEALING	**1-53, 1-55, 1-57**
060	2512780-0100		1	SEAL	**1-117, 1-119, 1-121**
070	2541634-0100		1	EDGE ROLLER	**1-71, 1-73**
090	2555627-0100		1	PRESSURE ROLLER	**1-123**
A3/FLEX TGA 1000SQ NODIMC, A3/FLEX TGA 0500SQ NODIMC, A3/FLEX TGA 0750SQ NODIMC (See drawing on page: 1-24)					
010	2559062-0200		1	LOWER FORMING RING	**1-75, 1-77, 1-79, 1-81, 1-83, 1-85**
020	2547422-0200		1	UPPER FORMING RING	**1-87, 1-89, 1-91, 1-93, 1-95, 1-97, 1-99, 1-101, 1-103**
030	2547421-0100		1	FORMING RING	**1-105, 1-107, 1-109, 1-111**
050	2657873-0100		1	LONGITUDINAL SEALING	**1-53, 1-55, 1-57**
060	2512780-0100		1	SEAL	**1-117, 1-119, 1-121**
070	2541634-0100		1	EDGE ROLLER	**1-71, 1-73**
A3/FLEX TPA 0330SQ NODIMC (See drawing on page: 1-24)					
010	2559062-0200		1	LOWER FORMING RING	**1-75, 1-77, 1-79, 1-81, 1-83, 1-85**
020	2547422-0200		1	UPPER FORMING RING	**1-87, 1-89, 1-91, 1-93, 1-95, 1-97, 1-99, 1-101, 1-103**

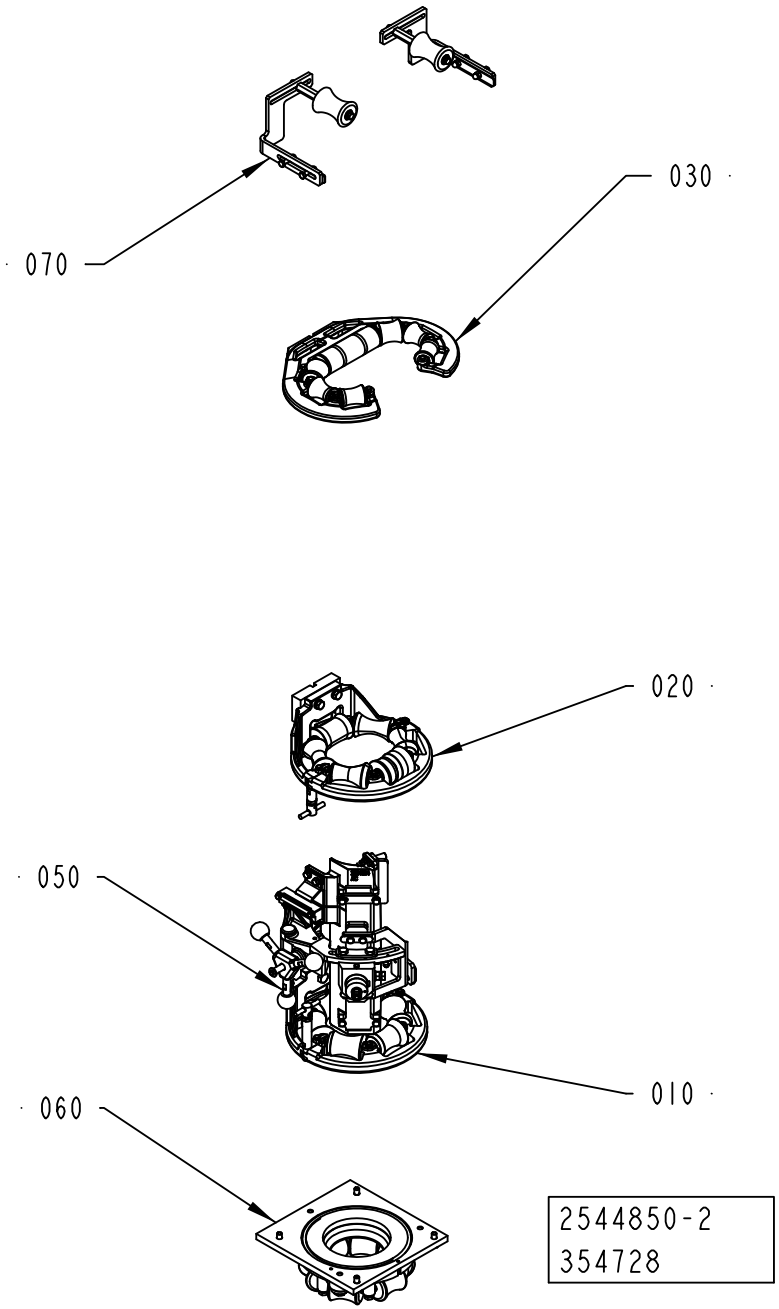
070
030
020
050
010
060
2544850-2
354728

Pos	Part No	UN	Qty	Description	Page No
A3/FLEX TPA 0330SQ NODIMC (Cont'd) (See drawing on page: 1-24)					
030	2547421-0100		1	FORMING RING	**1-105, 1-107, 1-109, 1-111**
050	2657873-0100		1	LONGITUDINAL SEALING	**1-53, 1-55, 1-57**
060	2512780-0100		1	SEAL	**1-117, 1-119, 1-121**
070	2541634-0100		1	EDGE ROLLER	**1-71, 1-73**
A3/FLEX TPA 0500SQ NODIMC (See drawing on page: 1-24)					
010	2559062-0200		1	LOWER FORMING RING	**1-75, 1-77, 1-79, 1-81, 1-83, 1-85**
020	2547422-0200		1	UPPER FORMING RING	**1-87, 1-89, 1-91, 1-93, 1-95, 1-97, 1-99, 1-101 1-103**
030	2547421-0100		1	FORMING RING	**1-105, 1-107, 1-109, 1-111**
050	2657873-0100		1	LONGITUDINAL SEALING	**1-53, 1-55, 1-57**
060	2512780-0100		1	SEAL	**1-117, 1-119, 1-121**
070	2541634-0100		1	EDGE ROLLER	**1-71, 1-73**
A3/FLEX TPA 1000SQ NODIMC QC, A3/FLEX TPA 0750SQ NODIMC QC (See drawing on page: 1-28)					
010	2559062-0200		1	LOWER FORMING RING	**1-75, 1-77, 1-79, 1-81, 1-83, 1-85**
020	2547422-0200		1	UPPER FORMING RING	**1-87, 1-89, 1-91, 1-93, 1-95, 1-97, 1-99, 1-101 1-103**
030	2547421-0100		1	FORMING RING	**1-105, 1-107, 1-109, 1-111**
050	2657873-0100		1	LONGITUDINAL SEALING	**1-53, 1-55, 1-57**
060	2512780-0100		1	SEAL	**1-117, 1-119, 1-121**
070	2541634-0100		1	EDGE ROLLER	**1-71, 1-73**
090	2555627-0100		1	PRESSURE ROLLER	**1-123**
A3/FLEX TPA 1000SQ NODIMC NOQC (See drawing on page: 1-28)					
010	2559062-0200		1	LOWER FORMING RING	**1-75, 1-77, 1-79, 1-81, 1-83, 1-85**
020	2547422-0200		1	UPPER FORMING RING	**1-87, 1-89, 1-91, 1-93, 1-95, 1-97, 1-99, 1-101 1-103**
030	2547421-0100		1	FORMING RING	**1-105, 1-107, 1-109, 1-111**
050	2657873-0100		1	LONGITUDINAL SEALING	**1-53, 1-55, 1-57**
060	2512780-0100		1	SEAL	**1-117, 1-119, 1-121**
070	2541634-0100		1	EDGE ROLLER	**1-71, 1-73**
090	2555627-0100		1	PRESSURE ROLLER	**1-123**

Pos	Part No	UN	Qty	Description	Page No

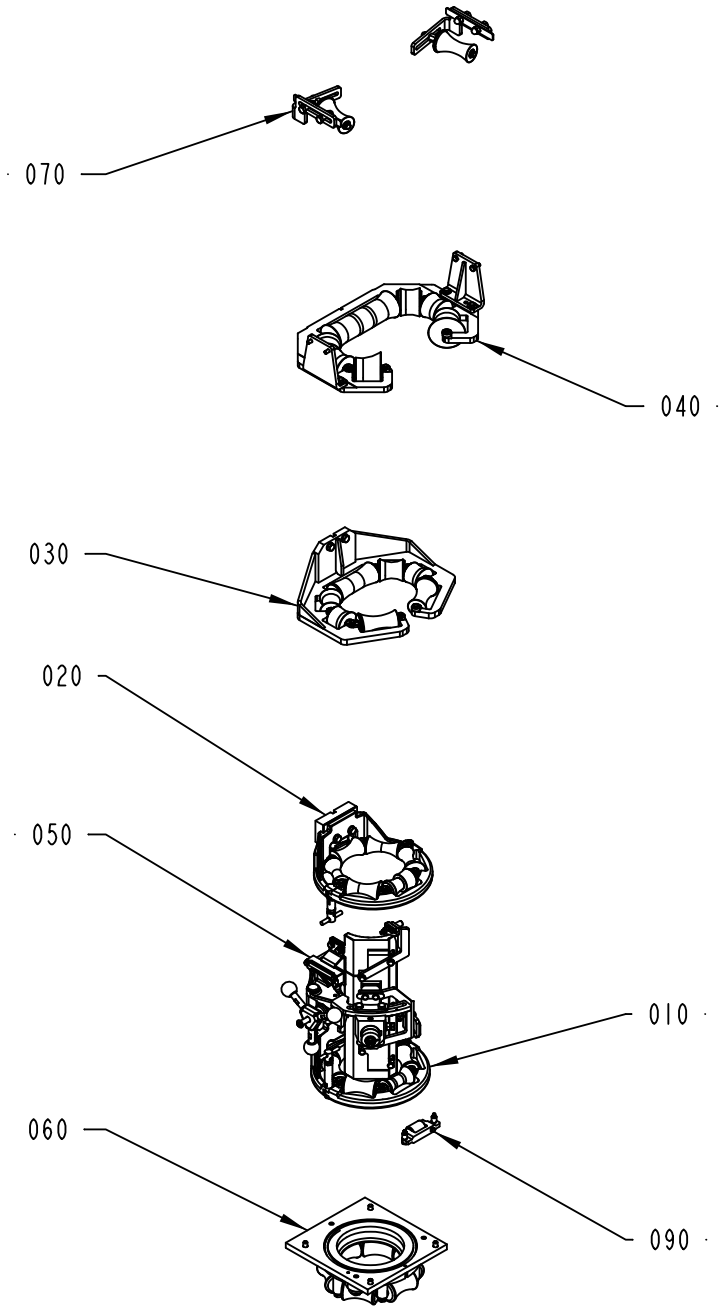

2544850-5
201309

Pos	Part No	UN	Qty	Description	Page No
SEE PREVIOUS LISTS PAGES: 1-23, 1-25.					

Pos	Part No	UN	Qty	Description	Page No

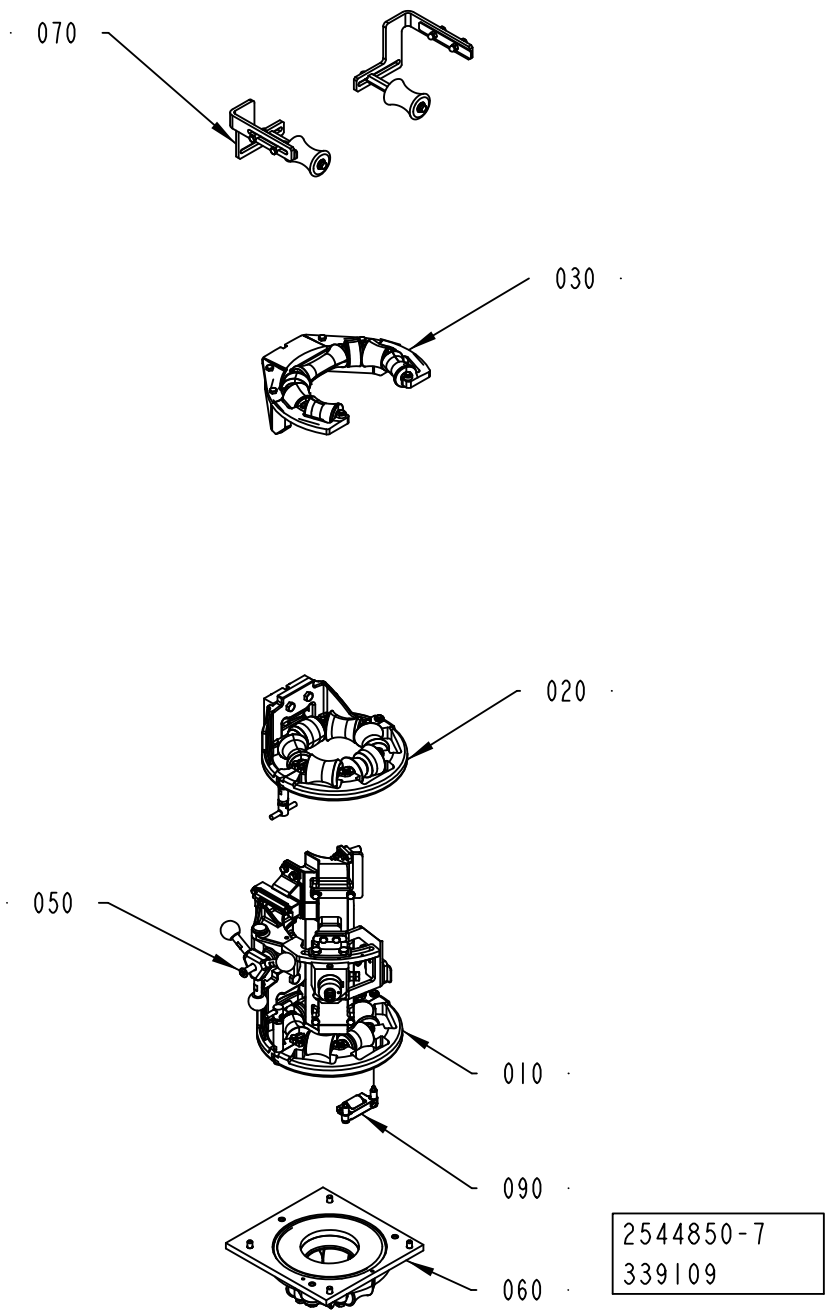
070
030
020
050
010
090
060
2544850-7
339109

Pos	Part No	UN	Qty	Description	Page No
SEE PREVIOUS LISTS PAGES: 1-23, 1-25.					

Pos	Part No	UN	Qty	Description	Page No

LOWER FORMING RING

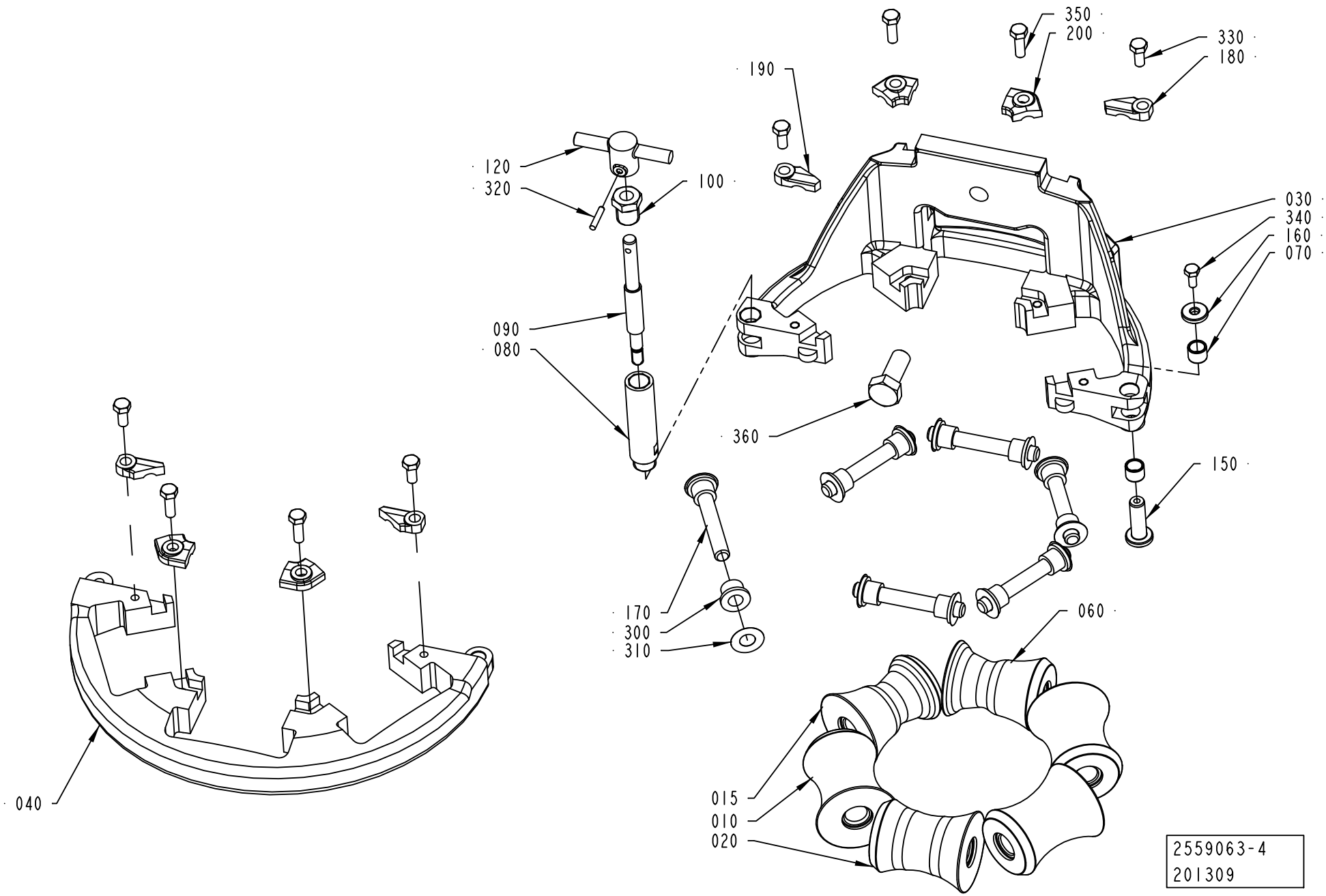

ECM: 409291 - 20091002
Group number: 2559063-0200
Assembly Drawing: 2559063-4_1_AA

This list covers pages from 1-30 to 1-37

Pos	Part No	UN	Qty	Description	Page No
TBA 1000B STDA7 (See drawing on page: 1-30)					
010	1349851-0000		3	ROLL	
	Remark : PLUS ROLLER 1349853-0000				
	MINUS ROLLER 1349852-0000				
015	2592540-0000		1	ROLLER	
020	2518098-0000		1	COUNTER ROLLER	
030	2764026-0000		1	LOWER FORMING RING	
040	2700546-0000		1	FRONT RING	
060	2592539-0000		1	ROLLER	
170	752186-0014		6	SHAFT	
180	2528119-0004		2	LOCK PLATE	
190	2528118-0004		2	LOCK PLATE	
200	2528123-0004		4	LOCK PLATE	
300	90240-0172		12	FLANGE BUSHING, 8X12X10 MM	
TBA 1000E LIGHTCAP 30 (See drawing on page: 1-36)					
010	2897901-0000		1	ROLLER	
015	1490763-0000		2	ROLLER	
020	2898309-0000		1	ROLLER	
030	2764023-0000		1	LOWER FORMING RING	
040	2736705-0000		1	LOWER FORMING RING	
050	2898310-0000		1	ROLLER	
060	2968257-0000		1	ROLLER	
170	752186-0016		6	SHAFT	
180	2528119-0004		2	LOCK PLATE	
190	2528118-0004		2	LOCK PLATE	
200	2528123-0004		4	LOCK PLATE	
300	90240-0172		12	FLANGE BUSHING, 8X12X10 MM	
TBA 1000M STDA7 (See drawing on page: 1-30)					
010	3016566-0000		3	ROLLER	
015	3016908-0000		1	ROLLER	
020	3016910-0000		1	COUNTER ROLLER	
030	2764026-0000		1	LOWER FORMING RING	
040	2700546-0000		1	FRONT RING	
060	3016707-0000		1	ROLLER	
170	752186-0014		6	SHAFT	
180	2528119-0004		2	LOCK PLATE	
190	2528118-0004		2	LOCK PLATE	
200	2528123-0004		4	LOCK PLATE	
300	90240-0172		12	FLANGE BUSHING, 8X12X10 MM	
TBA 1000S LIGHTCAP (See drawing on page: 1-32)					
010	2846567-0000		3	ROLLER	
015	2716543-0000		1	ROLLER	
020	1334856-0000		1	COUNTER ROLLER	
030	2764027-0000		1	LOWER FORMING RING	
040	2721423-0000		1	FORMING RING	
060	2716546-0000		1	ROLLER	
170	752186-0016		6	SHAFT	
180	2528119-0005		2	LOCK PLATE	
190	2528118-0005		2	LOCK PLATE	
200	2528123-0004		4	LOCK PLATE	
300	90240-0172		12	FLANGE BUSHING, 8X12X10 MM	
TBA 1000S STDA7 (See drawing on page: 1-30)					
010	567746-0001		3	ROLLER (STANDARD SIZE)	
	Remark : PLUS ROLLER 3-567746-2				
	MINUS ROLLER 3-567746-3				
015	1523664-0001		1	ROLLER (STANDARD SIZE)	
020	1334856-0000		1	COUNTER ROLLER	
030	2764027-0000		1	LOWER FORMING RING	
040	2721423-0000		1	FORMING RING	
060	1523665-0001		1	ROLLER (STANDARD SIZE)	
170	752186-0016		6	SHAFT	
180	2528119-0005		2	LOCK PLATE	
190	2528118-0005		2	LOCK PLATE	
200	2528123-0004		4	LOCK PLATE	
300	90240-0172		12	FLANGE BUSHING, 8X12X10 MM	
TPA 500SQ LIGHTCAP (See drawing on page: 1-34)					
010	2601328-0000		2	ROLLER	
	Remark : PLUS ROLLER 2641281-0002				
	MINUS ROLLER 2641281-0001				
015	2961507-0000		1	ROLLER	
020	2686861-0000		1	ROLLER	
030	2978594-0000		1	SUPPORT RING	
040	2731506-0000		1	LOWER FORMING RING	
060	2961508-0000		1	ROLLER	
170	752186-0005		3	SHAFT	
180	2528119-0004		2	LOCK PLATE	
190	2528118-0004		2	LOCK PLATE	
200	2528123-0003		2	LOCK PLATE	
220	752186-0006		2	SHAFT	
230	2953241-0000		1	LOCK PLATE	
240	2953242-0000		1	LOCK PLATE	
300	90240-0172		10	FLANGE BUSHING, 8X12X10 MM	
Common Parts					
070	2526826-0000		2	BUSHING	

Machine Type | Group Description | Used-In | Group Number | Page No

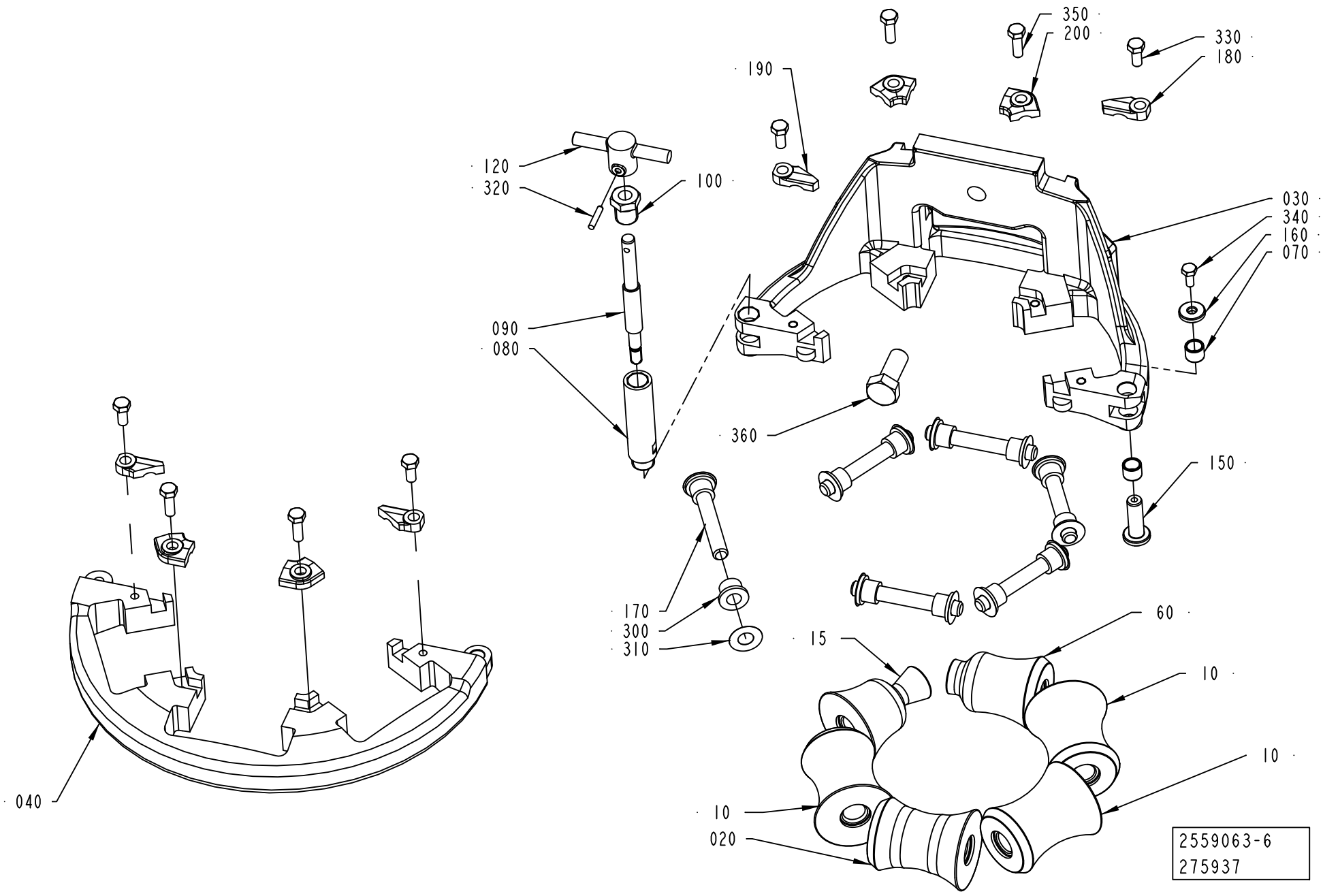
350
200
330
180
190
120
320
100
030
340
160
070
090
080
360
150
170
300
310
60
15
10
10
10
020
2559063-6
275937
040

ECM: 409291 - 20091002
Group number: 2559063-0200
Assembly Drawing: 2559063-6_1_AB

This list covers pages from 1-30 to 1-37

Pos	Part No	UN	Qty	Description	Page No
Common Parts (Cont'd)					
080	2764032-0000		1	SHAFT	
090	2764033-0000		1	SHAFT	
100	2731428-0000		1	NUT	
120	2764036-0000		1	KNOB	
150	2526827-0000		1	SHAFT	
160	2526825-0000		1	WASHER	
310	2033-0011		12	WASHER	
320	311103-0236		1	PARALLEL PIN ISO 2338 3M6X16 A1	
330	312105-0327		4	SCREW M6S ISO 4017 M5X12 A480	
340	312105-0289		1	SCREW M6S H4X10 A4 70 ISO4017/DIN933	
350	312105-0329		4	SCREW M6S ISO 4017 M5X16 A480	
360	312105-0493		1	SCREW M6S ISO 4017 M10X25 A480	

Pos	Part No	UN	Qty	Description	Page No

LOWER FORMING RING

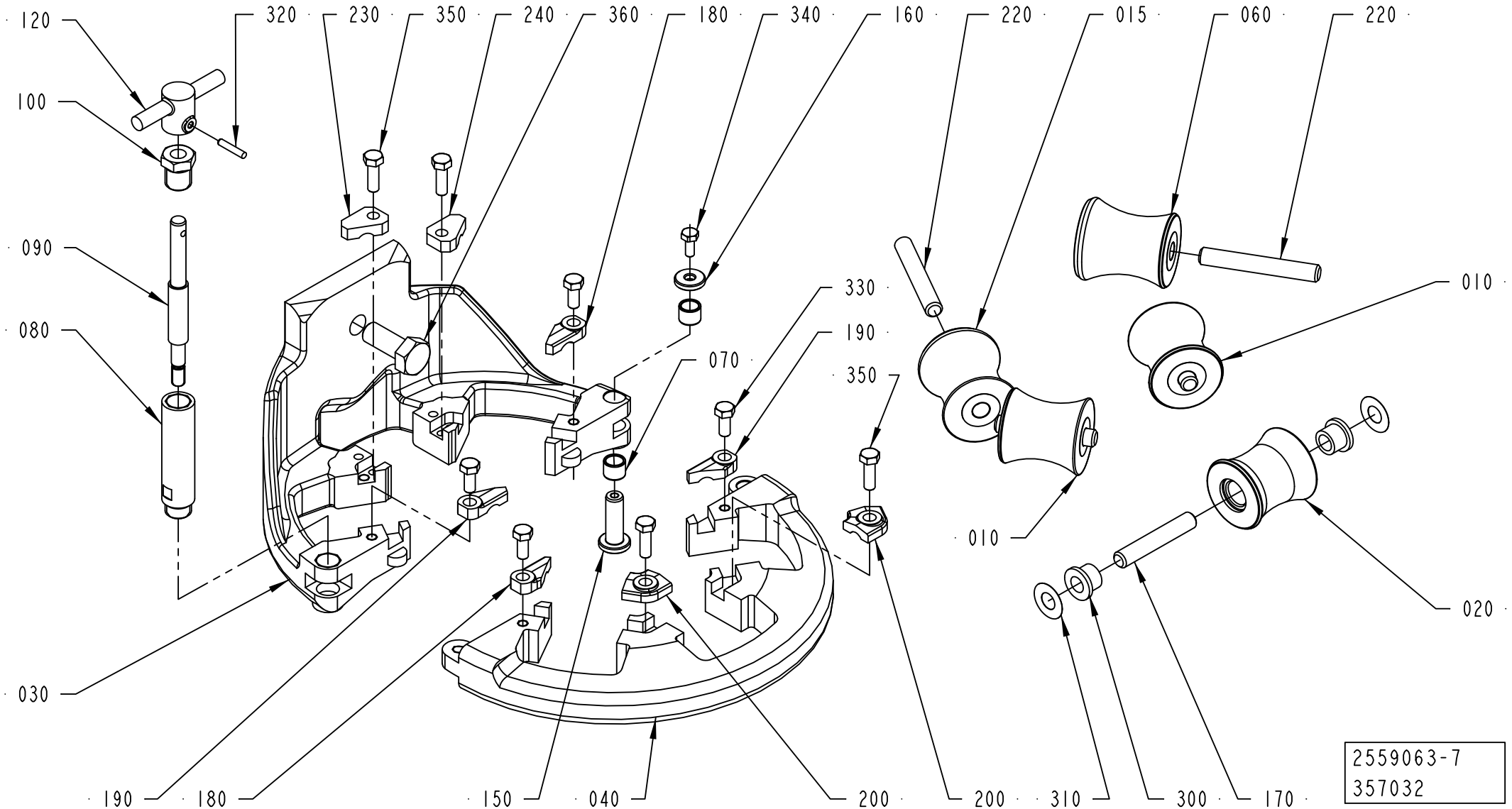

ECM: 409291 - 20091002
Group number: 2559063-0200
Assembly Drawing: 2559063-7_1_AA

This list covers pages from 1-30 to 1-37

Pos	Part No	UN	Qty	Description	Page No
SEE PREVIOUS LISTS PAGES: 1-31, 1-33.					

Pos	Part No	UN	Qty	Description	Page No

Machine Type | Group Description | Used-In | Group Number | Page No

LOWER FORMING RING

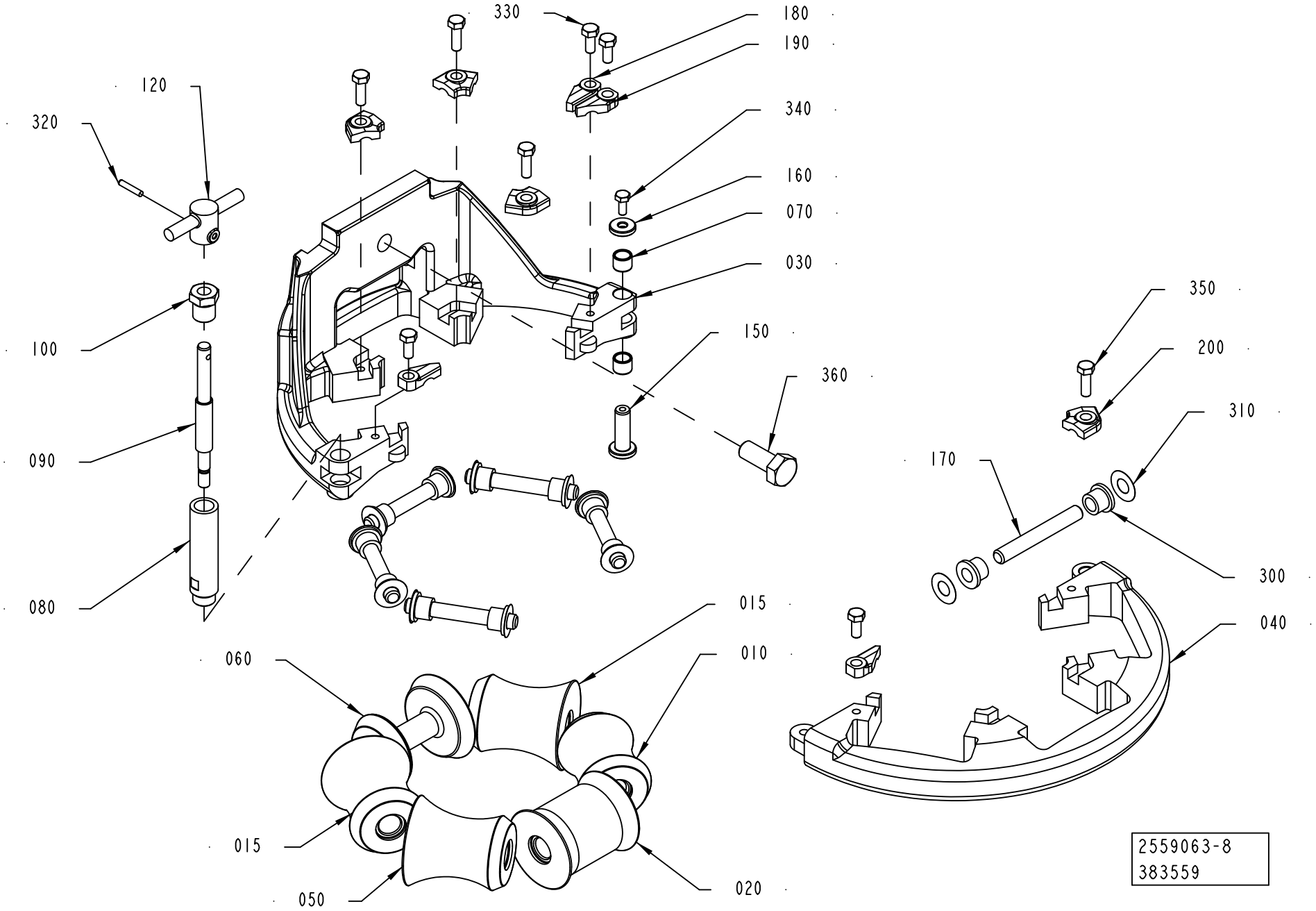

ECM: 409291 - 20091002
Group number: 2559063-0200
Assembly Drawing: 2559063-8_1_AA

This list covers pages from 1-30 to 1-37

Pos	Part No	UN	Qty	Description	Page No
SEE PREVIOUS LISTS PAGES: 1-31, 1-33.					

Pos	Part No	UN	Qty	Description	Page No

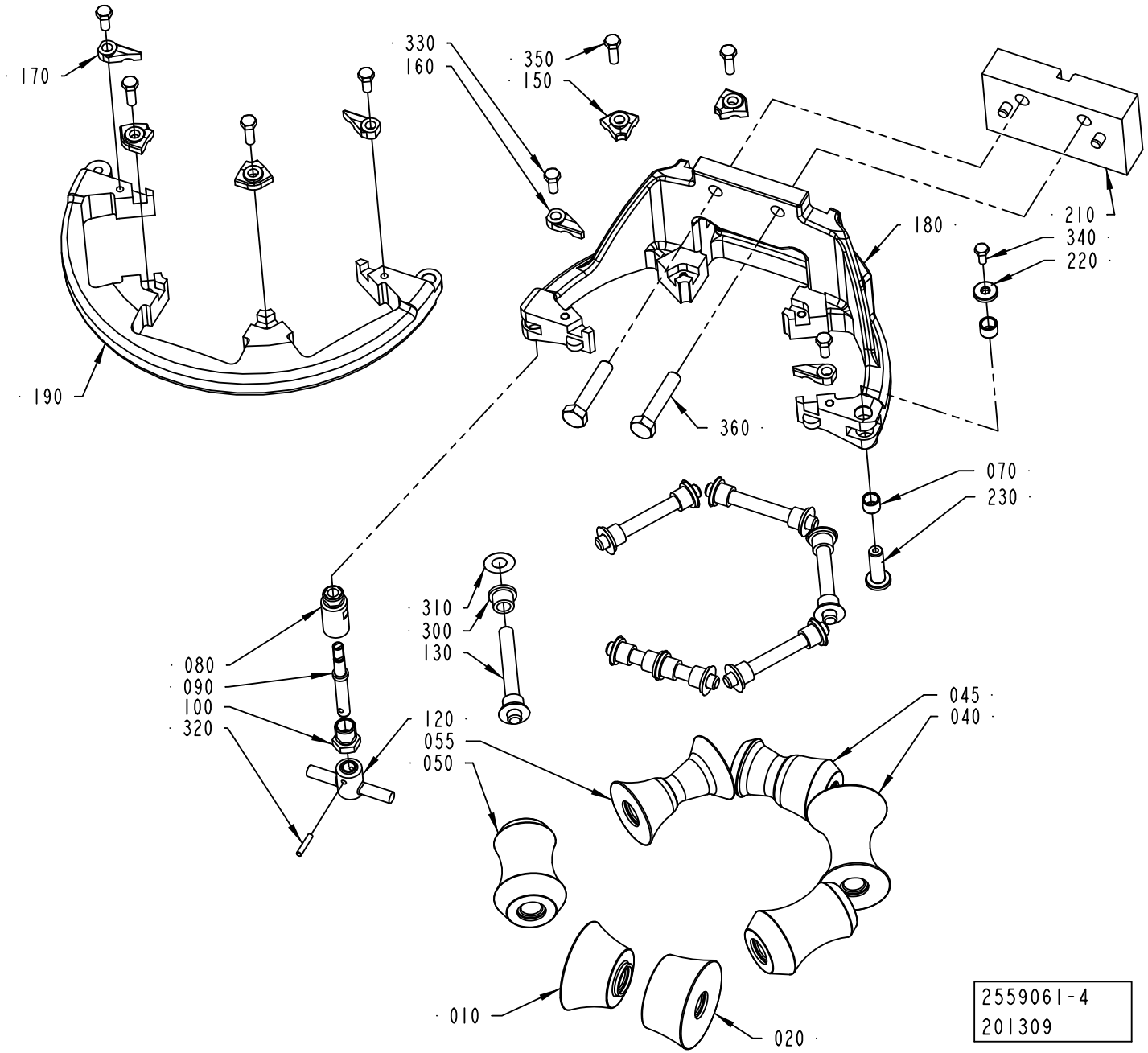
170
330
160
350
150
210
340
220
180
190
360
070
230
310
300
130
080
090
100
320
120
055
050
045
040
010
020
2559061-4
201309

ECM: 409286 - 20091002
Group number: 2559061-0200
Assembly Drawing: 2559061-4_1_AA

This list covers pages from 1-38 to 1-45

Pos	Part No	UN	Qty	Description	Page No
TBA 1000B STDA7 (See drawing on page: 1-40)					
010	2751479-0000		1	ROLLER	
020	2751478-0000		1	ROLLER	
030	2751483-0000		1	ROLLER	
040	2751481-0000		1	ROLLER	
045	2758084-0000		1	ROLLER	
055	2758085-0000		1	ROLLER	
060	2751482-0000		1	ROLLER	
130	752186-0015		3	SHAFT	
135	752186-0007		3	SHAFT	
150	2528123-0004		2	LOCK PLATE	
155	2528123-0008		2	LOCK PLATE	
160	2528118-0005		1	LOCK PLATE	
165	2528118-0001		1	LOCK PLATE	
170	2528119-0005		1	LOCK PLATE	
175	2528119-0001		1	LOCK PLATE	
180	2764022-0000		1	UPPER FORMING RING	
190	2736677-0000		1	UPPER FORMING RING	
210	2532914-0000		1	SPACER	
300	90240-0172		14	FLANGE BUSHING, 8X12X10 MM	
360	312109-0460		2	SCREW M6S ISO 4017 M8X45 A480	
380	315115-0165		2	WASHER PLAIN, TBRB 8,4/16 H=3	
TBA 1000E LIGHTCAP 30 (See drawing on page: 1-44)					
010	2532965-0000		1	ROLLER	
020	1548541-0000		1	ROLLER	
040	2977909-0000		1	ROLLER	
045	2978351-0000		1	ROLLER	
050	1548531-0000		1	ROLLER	
052	1548540-0000		1	ROLLER	
055	2977907-0000		1	ROLLER	
130	752186-0007		6	SHAFT	
150	2528123-0004		4	LOCK PLATE	
160	2528118-0004		2	LOCK PLATE	
170	2528119-0004		2	LOCK PLATE	
180	2764013-0000		1	UPPER FORMING RING	
190	2736697-0000		1	UPPER FORMING RING	
210	2982646-0000		1	SPACER	
300	90240-0172		14	FLANGE BUSHING, 8X12X10 MM	
360	312109-0460		2	SCREW M6S ISO 4017 M8X45 A480	
380	315115-0165		2	WASHER PLAIN, TBRB 8,4/16 H=3	
TBA 1000M STDA7 (See drawing on page: 1-40)					
010	3019311-0000		1	ROLLER	
020	3019312-0000		1	ROLLER	
030	3019310-0000		1	ROLLER	
040	3019309-0000		1	ROLLER	
045	3019308-0000		1	ROLLER	
055	3019307-0000		1	ROLLER	
060	3019313-0000		1	ROLLER	
130	752186-0015		3	SHAFT	
135	752186-0007		3	SHAFT	
150	2528123-0004		2	LOCK PLATE	
155	2528123-0008		2	LOCK PLATE	
160	2528118-0005		1	LOCK PLATE	
165	2528118-0001		1	LOCK PLATE	
170	2528119-0005		1	LOCK PLATE	
175	2528119-0001		1	LOCK PLATE	
180	2764022-0000		1	UPPER FORMING RING	
190	2736677-0000		1	UPPER FORMING RING	
210	2532914-0000		1	SPACER	
300	90240-0172		14	FLANGE BUSHING, 8X12X10 MM	
360	312109-0460		2	SCREW M6S ISO 4017 M8X45 A480	
380	315115-0165		2	WASHER PLAIN, TBRB 8,4/16 H=3	
TBA 1000S LIGHTCAP (See drawing on page: 1-42)					
010	2512737-0000		1	ROLLER	
020	2846393-0000		1	ROLLER	
040	2846395-0000		1	ROLLER	
045	2716540-0000		1	ROLLER	
050	2512742-0000		1	ROLLER	
052	2846394-0000		1	ROLLER	
055	2716539-0000		1	ROLLER	
130	752186-0007		6	SHAFT	
150	2528123-0001		4	LOCK PLATE	
160	2528118-0001		2	LOCK PLATE	
170	2528119-0001		2	LOCK PLATE	
180	2764014-0000		1	UPPER FORMING RING	
190	2736676-0000		1	UPPER FORMING RING	
210	2532914-0000		1	SPACER	
300	90240-0172		10	FLANGE BUSHING, 8X12X10 MM	
305	2740795-0000		4	FLANGE BUSHING	
360	312109-0459		2	SCREW M6S ISO 4017 M8X40 A480	
TBA 1000S STDA7 (See drawing on page: 1-38)					
010	2512737-0000		1	ROLLER	
020	2512738-0000		1	ROLLER	
040	2512741-0000		1	ROLLER	

Machine Type | Group Description | Used-In | Group Number | Page No

UPPER FORMING RING

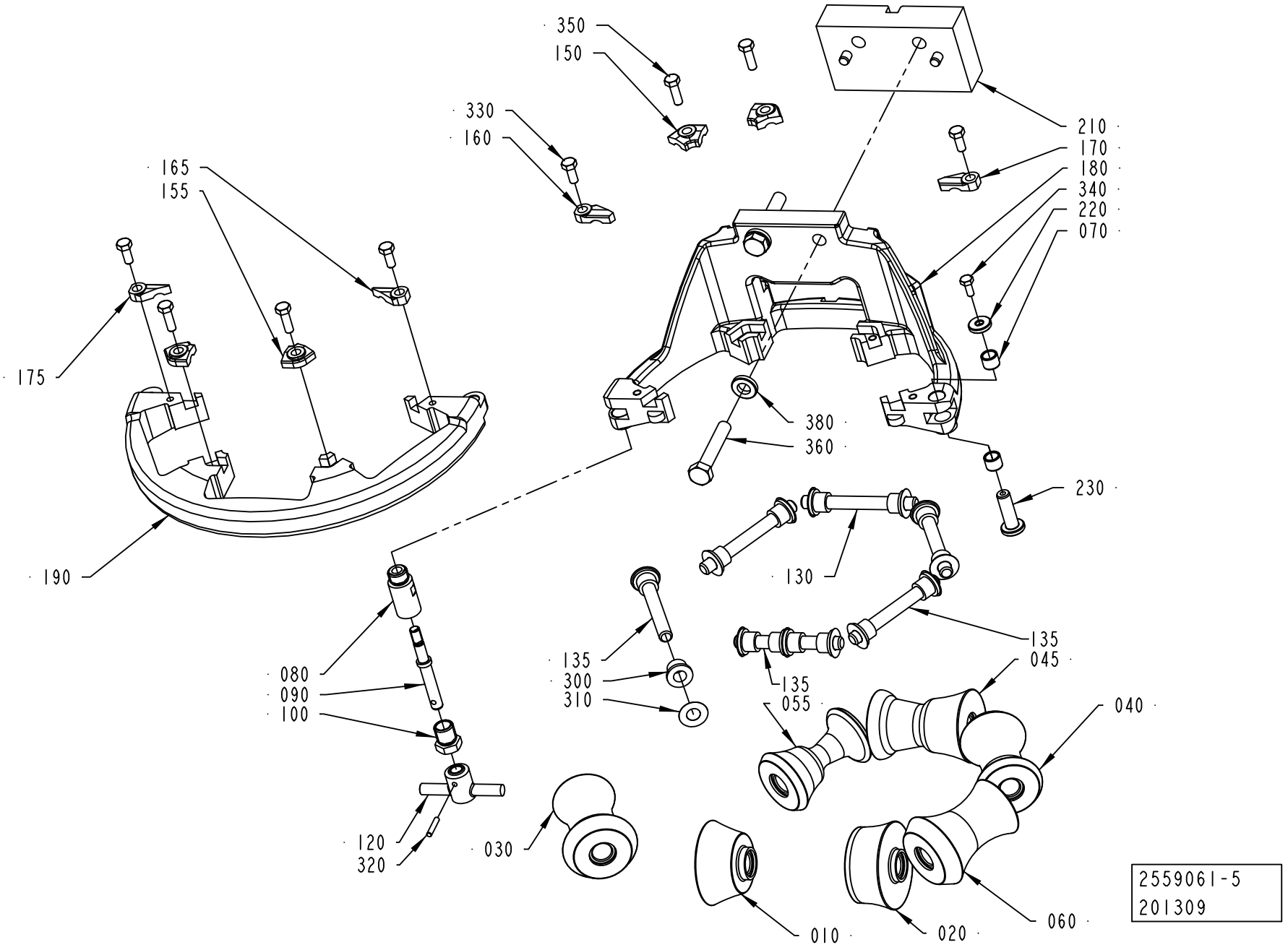

Pos	Part No	UN	Qty	Description	Page No
TBA 1000S STDA7 (Cont'd) (See drawing on page: 1-38)					
045	2555622-0000		1	ROLLER	
050	2512742-0000		2	ROLLER	
055	2555621-0000		1	ROLLER	
130	752186-0007		6	SHAFT	
150	2528123-0001		4	LOCK PLATE	
160	2528118-0001		2	LOCK PLATE	
170	2528119-0001		2	LOCK PLATE	
180	2764014-0000		1	UPPER FORMING RING	
190	2736676-0000		1	UPPER FORMING RING	
210	2532914-0000		1	SPACER	
300	90240-0172		14	FLANGE BUSHING, 8X12X10 MM	
360	312109-0459		2	SCREW M6S ISO 4017 M8X40 A480	
TPA 500SQ LIGHTCAP (See drawing on page: 1-44)					
010	2954300-0000		1	ROLLER	
020	2954299-0000		1	ROLLER	
040	2977511-0000		1	ROLLER	
045	2977510-0000		1	ROLLER	
050	2680197-0000		1	ROLLER	
052	2611017-0000		1	ROLLER	
055	2977509-0000		1	ROLLER	
130	752186-0006		6	SHAFT	
150	2528123-0003		4	LOCK PLATE	
160	2528118-0004		2	LOCK PLATE	
170	2528119-0004		2	LOCK PLATE	
180	2764017-0000		1	UPPER FORMING RING	
190	2736632-0000		1	UPPER FORMING RING	
210	2954804-0000		1	SPACER	
300	90240-0172		14	FLANGE BUSHING, 8X12X10 MM	
360	312109-0460		2	SCREW M6S ISO 4017 M8X45 A480	
380	315115-0165		2	WASHER PLAIN, TBRB 8,4/16 H=3	
Common Parts					
070	2526826-0000		2	BUSHING	
080	2764034-0000		1	SHAFT	
090	2764035-0000		1	SHAFT	
100	2731428-0000		1	NUT	
120	2764036-0000		1	KNOB	
220	2526825-0000		1	WASHER	
230	2526827-0000		1	SHAFT	
310	2033-0011		14	WASHER	
320	311103-0236		1	PARALLEL PIN ISO 2338 3M6X16 A1	
330	312105-0327		4	SCREW M6S ISO 4017 M5X12 A480	
340	312105-0289		1	SCREW M6S H4X10 A4 70 ISO4017/DIN933	
350	312105-0329		4	SCREW M6S ISO 4017 M5X16 A480	

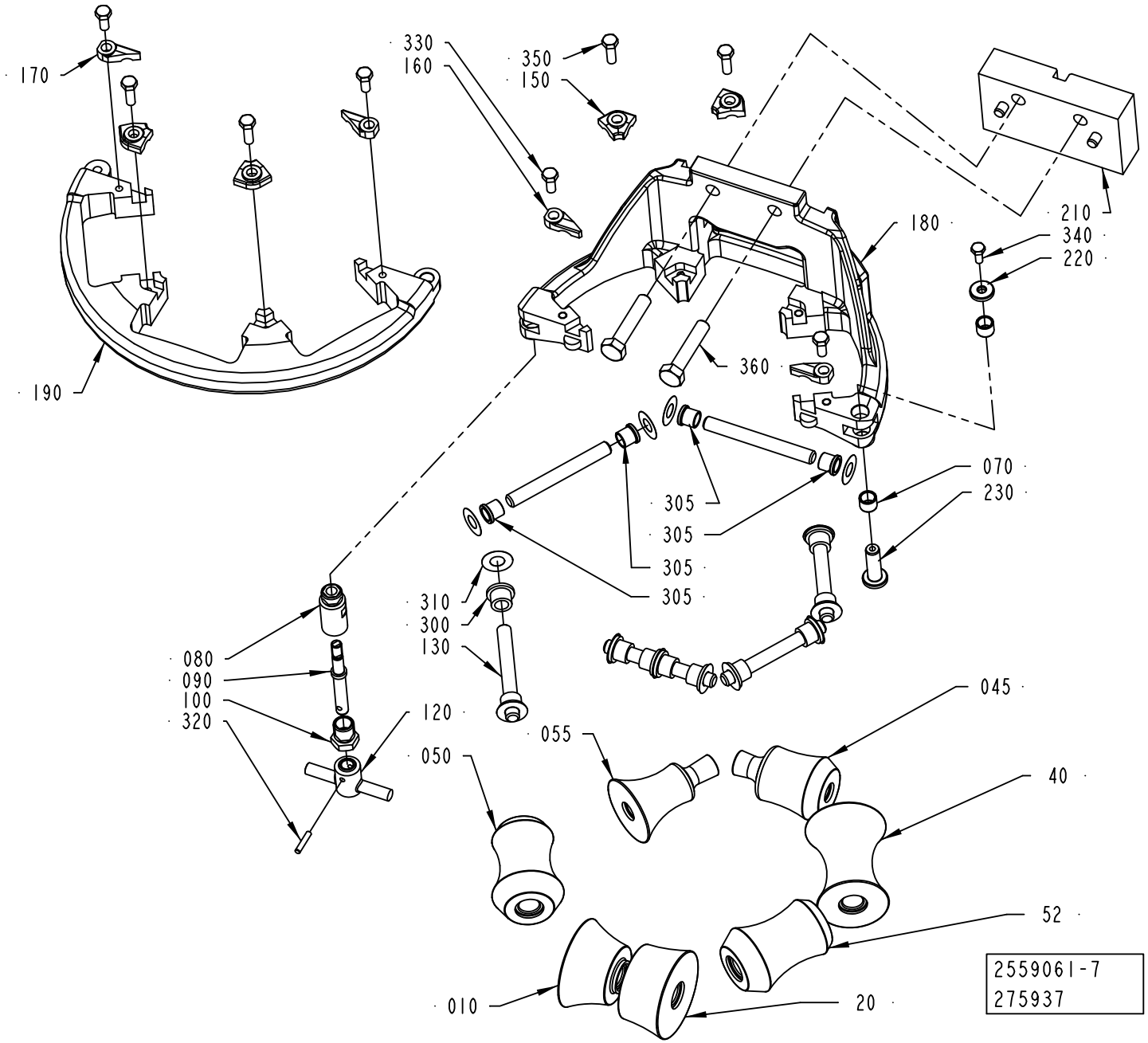
170
330
160
350
150
210
340
220
180
360
190
070
230
305
305
305
305
310
300
130
080
090
100
320
120
050
055
045
40
52
010
20
2559061-7
275937

ECM: 409286 - 20091002
Group number: 2559061-0200
Assembly Drawing: 2559061-7_1_AB

This list covers pages from 1-38 to 1-45

Pos	Part No	UN	Qty	Description	Page No
SEE PREVIOUS LISTS PAGES: 1-39, 1-41.					

Pos	Part No	UN	Qty	Description	Page No

Machine Type | Group Description | Used-In | Group Number | Page No

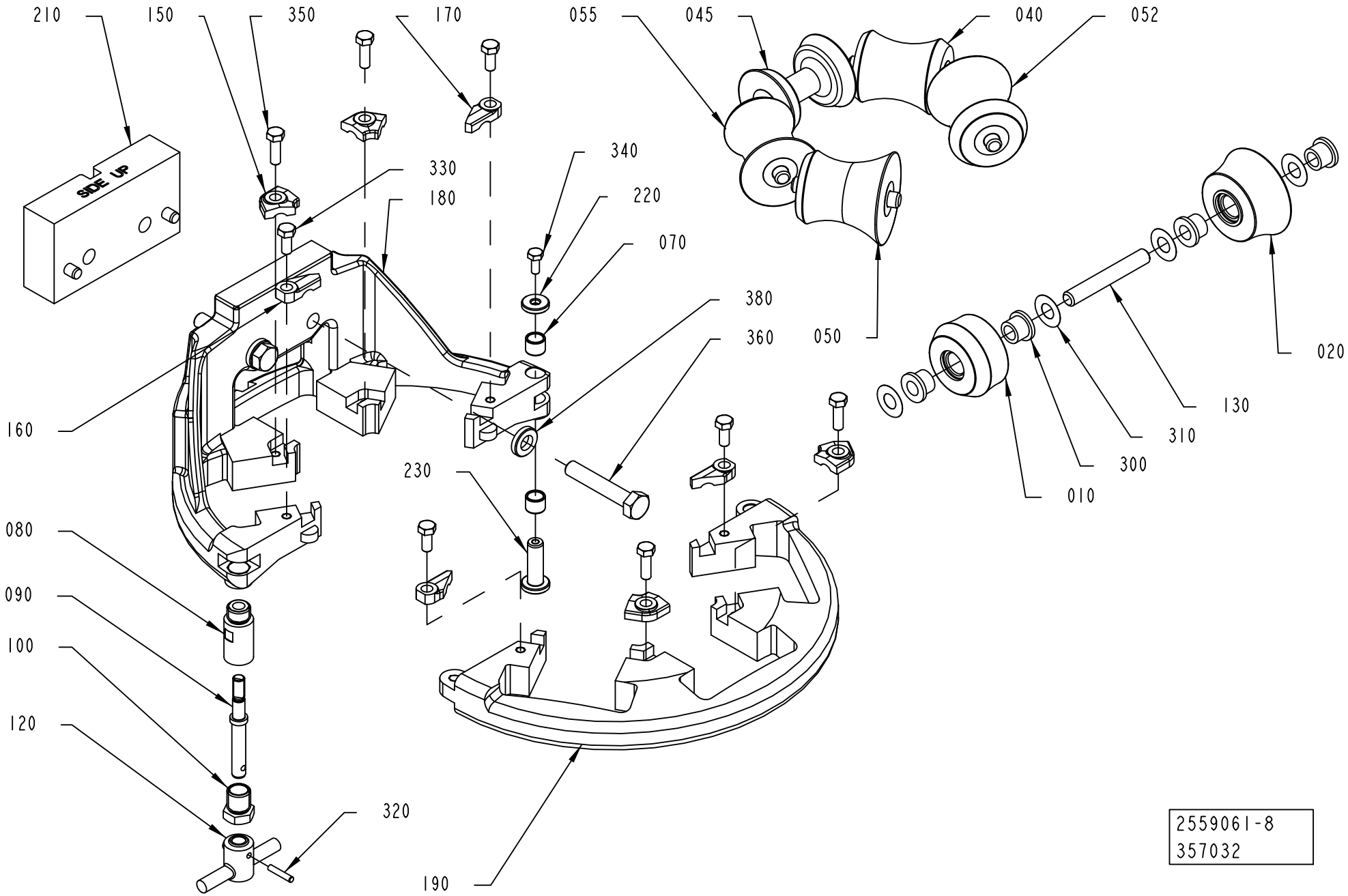
210
150
350
170
055
045
040
052
SIDE UP
330
180
340
220
070
380
360
050
020
130
310
300
010
160
230
080
090
100
120
320
190
2559061-8
357032

ECM: 409286 - 20091002
Group number: 2559061-0200
Assembly Drawing: 2559061-8_1_AA

This list covers pages from 1-38 to 1-45

Pos	Part No	UN	Qty	Description	Page No
SEE PREVIOUS LISTS PAGES: 1-39, 1-41.					

Pos	Part No	UN	Qty	Description	Page No

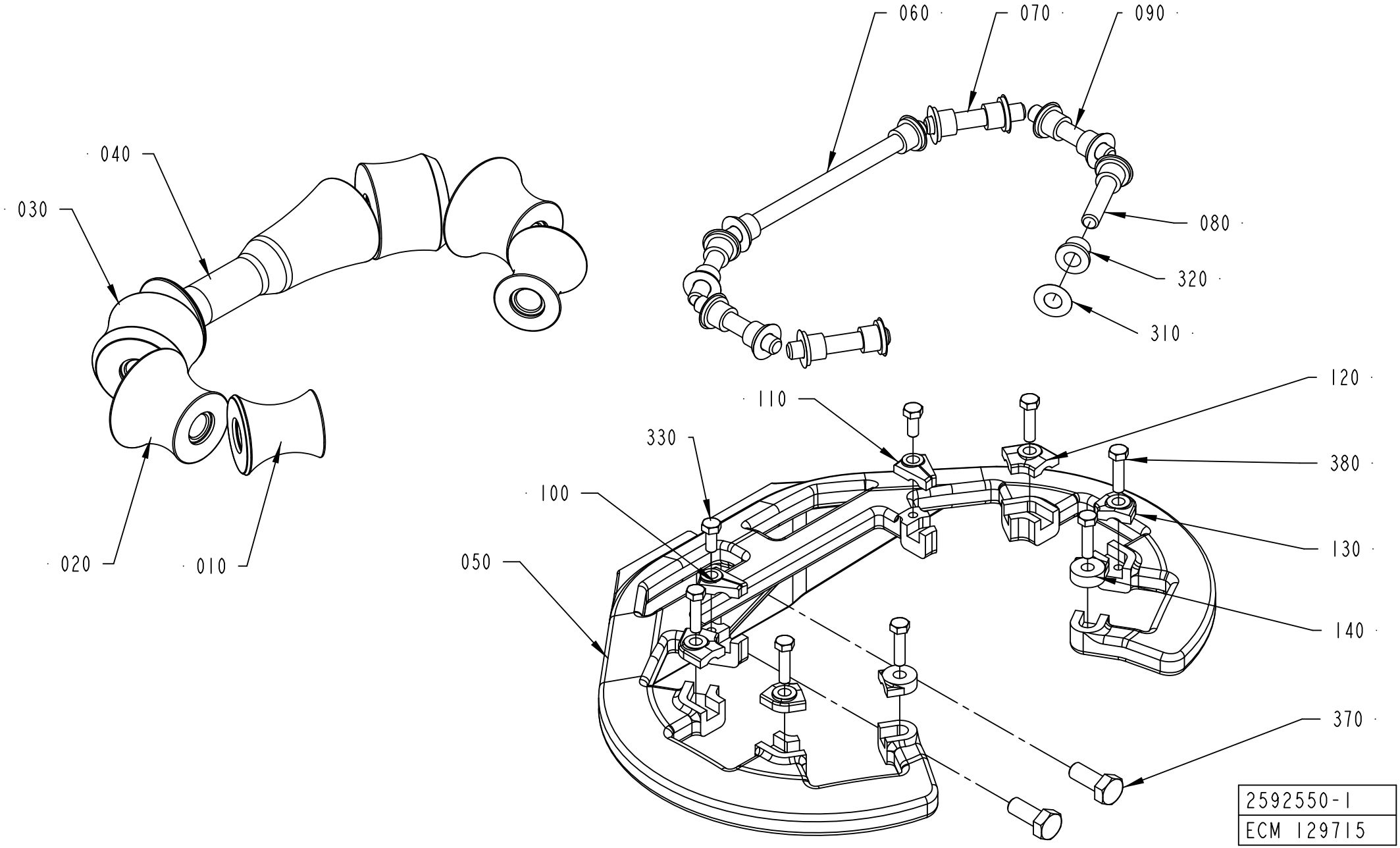
060
070
090
080
320
310
040
030
020
010
120
110
330
380
100
130
050
140
370
2592550-1
ECM 129715

ECM: 409289 - 20091002
Group number: 2592550-0100
Assembly Drawing: 2592550-1_1_AA

This list covers pages from 1-46 to 1-51

Pos	Part No	UN	Qty	Description	Page No
TBA 1000B STDA7, TBA 1000M STDA7 (See drawing on page: 1-46)					
010	2552206-0000		2	ROLLER	
020	2552205-0000		2	ROLLER	
030	2552188-0000		2	ROLLER	
040	2601240-0000		1	ROLLER	
050	2552160-0000		1	SUPPORT RING	
060	2522213-0005		1	SHAFT	
070	752186-0005		2	SHAFT	
080	2522213-0004		2	SHAFT	
090	752186-0019		2	SHAFT	
100	2552176-0001		1	LOCK PLATE	
110	2552177-0001		1	LOCK PLATE	
120	2528123-0002		2	LOCK PLATE	
130	2528123-0008		2	LOCK PLATE	
140	2532895-0004		2	LOCK PLATE	
320	90240-0172		14	FLANGE BUSHING, 8X12X10 MM	
330	312105-0327		2	SCREW M6S ISO 4017 M5X12 A480	
370	312105-0451		2	SCREW M6S ISO 4017 M8X20 A480	
380	312105-0331		6	SCREW M6S ISO 4017 M5X20 A480	
TBA 1000E LIGHTCAP 30 (See drawing on page: 1-50)					
010	2982995-0000		2	ROLLER	
020	2982994-0000		2	ROLLER	
030	2982993-0000		2	ROLLER	
040	2982992-0000		1	ROLLER	
050	2982991-0000		1	SUPPORT RING	
060	2522213-0013		1	SHAFT	
070	2522213-0015		2	SHAFT	
090	752186-0019		4	SHAFT	
130	2562667-0008		6	LOCK PLATE	
140	2532895-0002		2	LOCK PLATE	
320	90240-0172		14	FLANGE BUSHING, 8X12X10 MM	
330	312105-0329		8	SCREW M6S ISO 4017 M5X16 A480	
370	312105-0452		2	SCREW M6S ISO 4017 M8X22 A480	
390	315105-0165		2	WASHER BRB 8,4X16 RFR	
TBA 1000S LIGHTCAP (See drawing on page: 1-46)					
010	2512748-0000		2	ROLLER	
020	2512749-0000		2	ROLLER	
030	2512746-0000		2	ROLLER	
040	2716443-0000		1	ROLLER	
050	2552161-0000		1	SUPPORT RING	
060	2522213-0005		1	SHAFT	
070	752186-0005		2	SHAFT	
080	2522213-0004		2	SHAFT	
090	752186-0019		2	SHAFT	
100	2552176-0003		1	LOCK PLATE	
110	2552177-0003		1	LOCK PLATE	
120	2528123-0007		2	LOCK PLATE	
130	2528123-0001		2	LOCK PLATE	
140	2532895-0003		2	LOCK PLATE	
320	90240-0172		14	FLANGE BUSHING, 8X12X10 MM	
330	312105-0327		2	SCREW M6S ISO 4017 M5X12 A480	
370	312105-0451		2	SCREW M6S ISO 4017 M8X20 A480	
380	312105-0331		6	SCREW M6S ISO 4017 M5X20 A480	
TBA 1000S STDA7 (See drawing on page: 1-46)					
010	2512748-0000		2	ROLLER	
020	2512749-0000		2	ROLLER	
030	2512746-0000		2	ROLLER	
040	2592545-0000		1	ROLLER	
050	2552161-0000		1	SUPPORT RING	
060	2522213-0005		1	SHAFT	
070	752186-0005		2	SHAFT	
080	2522213-0004		2	SHAFT	
090	752186-0019		2	SHAFT	
100	2552176-0003		1	LOCK PLATE	
110	2552177-0003		1	LOCK PLATE	
120	2528123-0007		2	LOCK PLATE	
130	2528123-0001		2	LOCK PLATE	
140	2532895-0003		2	LOCK PLATE	
320	90240-0172		14	FLANGE BUSHING, 8X12X10 MM	
330	312105-0327		2	SCREW M6S ISO 4017 M5X12 A480	
370	312105-0451		2	SCREW M6S ISO 4017 M8X20 A480	
380	312105-0331		6	SCREW M6S ISO 4017 M5X20 A480	
TPA 500SQ LIGHTCAP (See drawing on page: 1-48)					
010	2974487-0000		2	ROLLER	
020	2969110-0000		2	ROLLER	
050	2969109-0000		1	SUPPORT RING	
080	752186-0014		2	SHAFT	
090	752186-0022		2	SHAFT	
120	2528123-0005		2	LOCK PLATE	
140	2532895-0002		4	LOCK PLATE	
320	90240-0172		8	FLANGE BUSHING, 8X12X10 MM	
370	312105-0452		2	SCREW M6S ISO 4017 M8X22 A480	
380	312105-0329		6	SCREW M6S ISO 4017 M5X16 A480	
390	315105-0165		2	WASHER BRB 8,4X16 RFR	

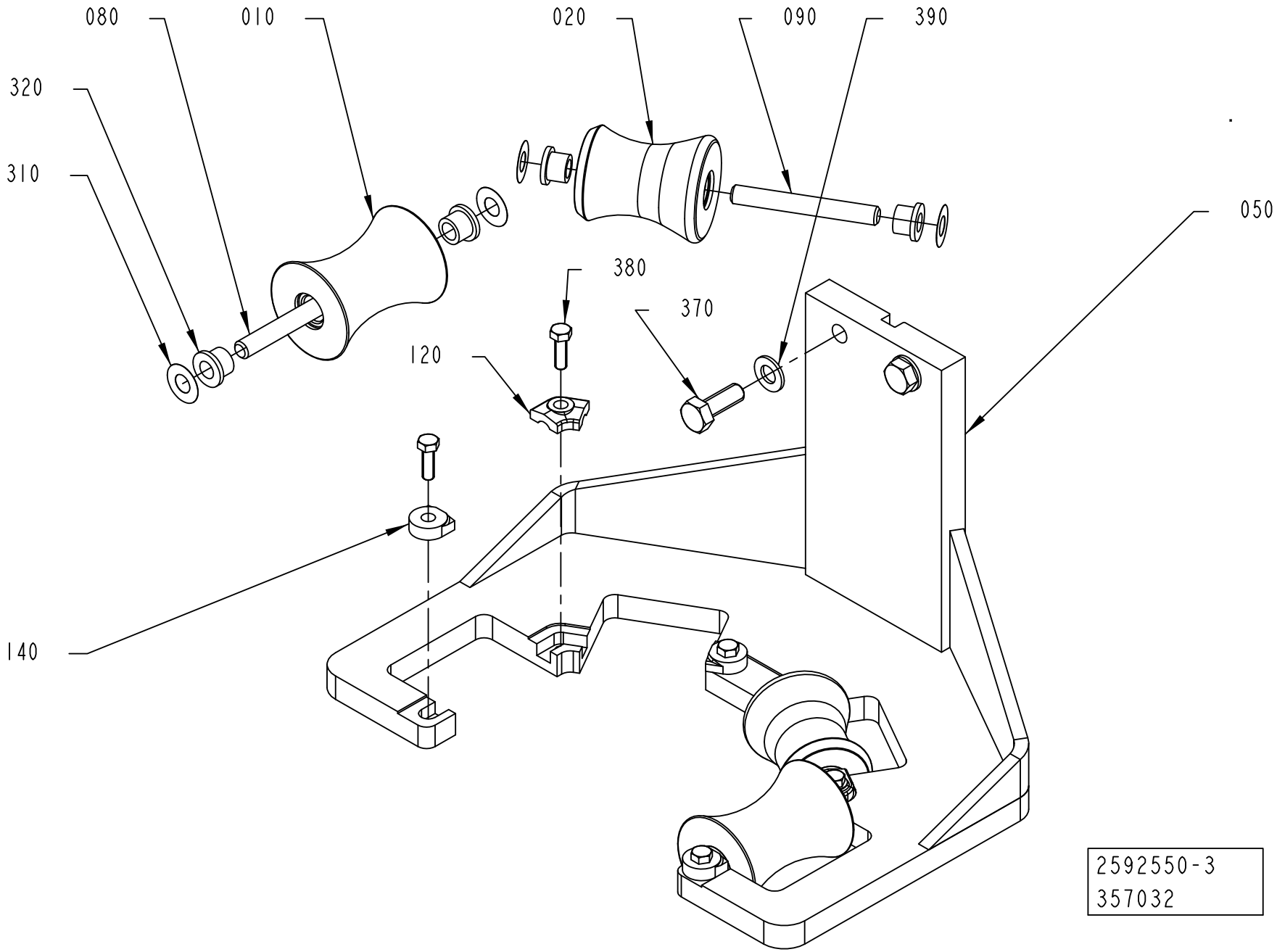
080
010
020
090
390
320
310
050
380
370
120
140
2592550-3
357032

Pos	Part No	UN	Qty	Description	Page No
Common Parts (Cont'd)					
310	2033-0011		14	WASHER	

Pos	Part No	UN	Qty	Description	Page No

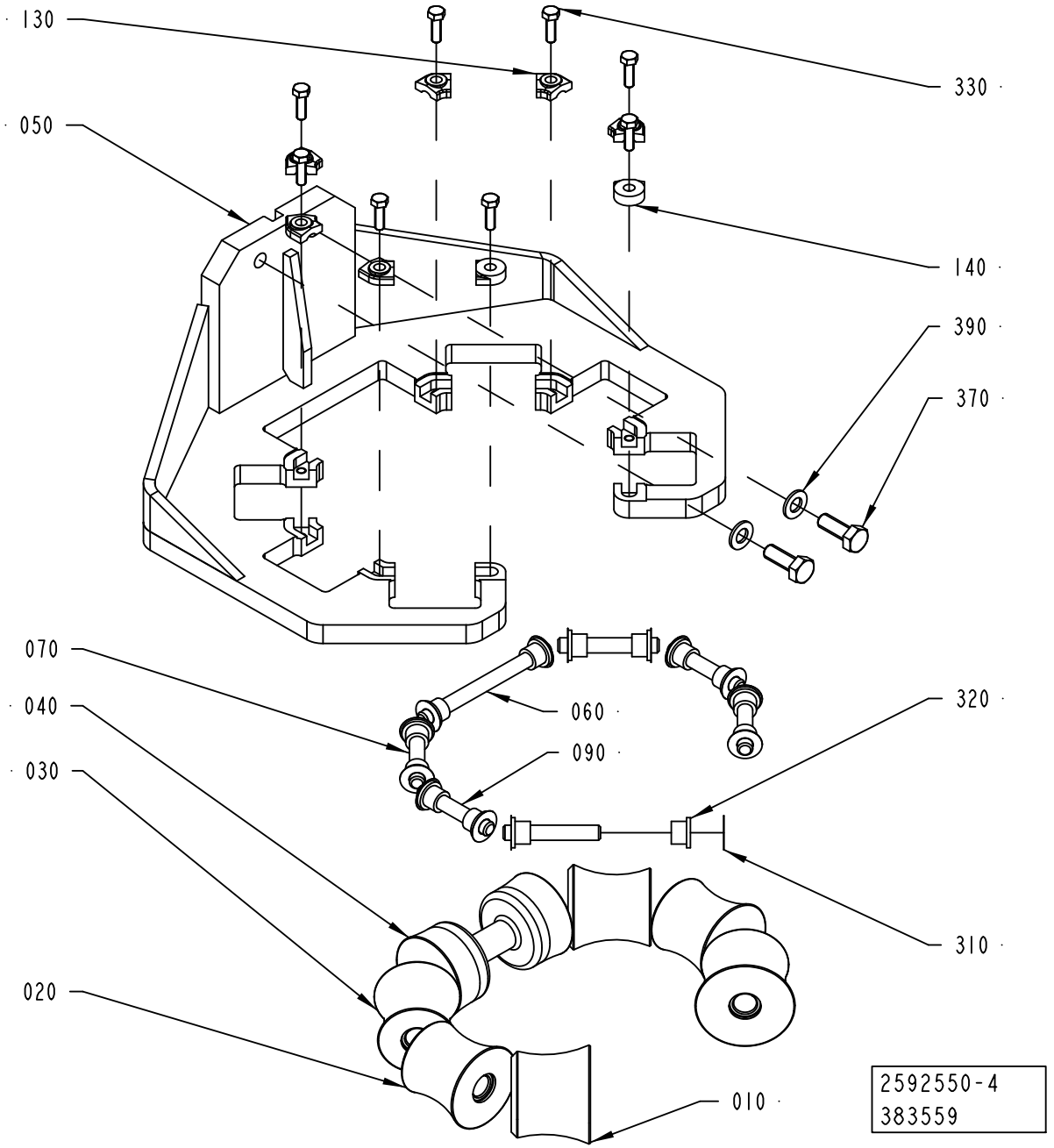
130
330
050
140
390
370
070
060
320
040
090
030
310
020
010
2592550-4
383559

ECM: 409289 - 20091002
Group number: 2592550-0100
Assembly Drawing: 2592550-4_1_AA

This list covers pages from 1-46 to 1-51

Pos	Part No	UN	Qty	Description	Page No
SEE PREVIOUS LISTS PAGES: 1-47, 1-49.					

Pos	Part No	UN	Qty	Description	Page No

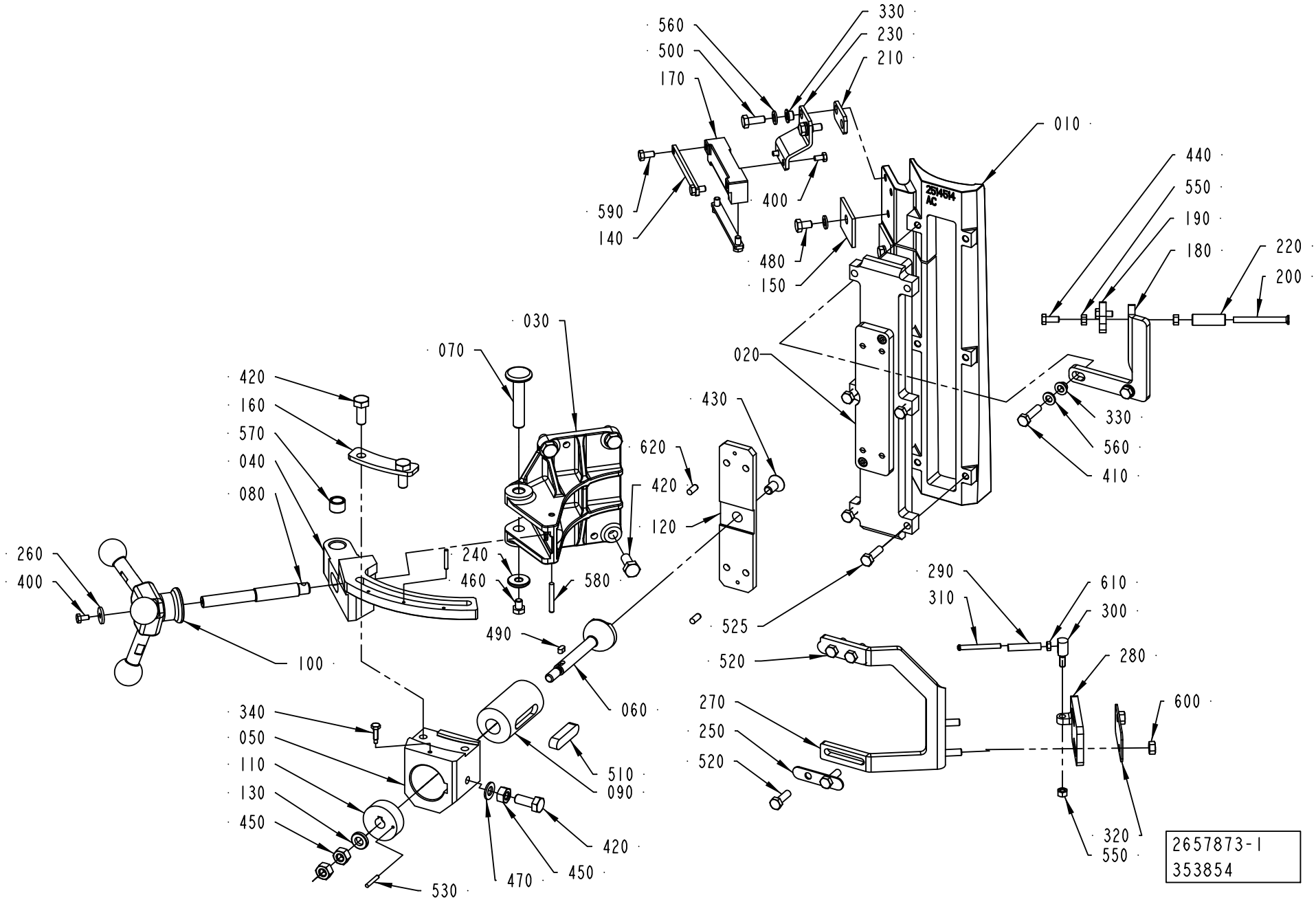
560
500
170
330
230
210
010
590
140
400
480
150
440
550
190
180
220
200
020
030
070
420
160
570
040
080
620
420
120
430
330
560
410
260
400
240
460
580
490
100
060
525
290
310
610
300
280
520
270
250
520
600
340
050
110
130
450
510
090
420
530
470
450
320
550
2657873-1
353854

ECM: 387753 - 20090402
Group number: 2657873-0100
Assembly Drawing: 2657873-1_1_AG

This list covers pages from 1-52 to 1-57

Pos	Part No	UN	Qty	Description	Page No
TBA 0250B, TBA 0330S, TBA 0250SQ, TBA 0200SQ, TBA 0200B (See drawing on page: 1-52)					
010	2532938-0000		1	INDUCTOR	
020	2862741-0000		1	INSULATING PLATE	
180	2547404-0000		1	BRACKET	
190	2547405-0000		1	BRACKET	
200	269151-0000		1	SHAFT	
220	2555625-0000		1	ROLL	
270	2555614-0000		1	BRACKET	
280	2555619-0000		1	BRACKET	
290	2555616-0000		1	ROLLER	
410	312105-0372		2	SCREW M6S ISO 4017 M6X25 A480	
440	312105-0327		2	SCREW M6S ISO 4017 M5X12 A480	
520	312105-0370		8	SCREW M6S ISO 4017 M6X20 A480	
550	312605-0314		1	HEXAGON NUT, M6M M5 A280	
610	312605-0312		1	HEXAGON NUT, M6M M4 A280	
TBA 0200M, TBA 0250S (See drawing on page: 1-52)					
010	2611053-0000		1	INDUCTOR	
020	2862740-0000		1	INSULATING PLATE	
180	2547404-0000		1	BRACKET	
190	2547405-0000		1	BRACKET	
200	269151-0000		1	SHAFT	
220	2555625-0000		1	ROLL	
270	2555614-0000		1	BRACKET	
280	2555619-0000		1	BRACKET	
290	2555616-0000		1	ROLLER	
410	312105-0372		2	SCREW M6S ISO 4017 M6X25 A480	
440	312105-0327		2	SCREW M6S ISO 4017 M5X12 A480	
520	312105-0370		8	SCREW M6S ISO 4017 M6X20 A480	
550	312605-0314		1	HEXAGON NUT, M6M M5 A280	
610	312605-0312		1	HEXAGON NUT, M6M M4 A280	
TBA 0200S, TPA 0250SQ, TPA 0200SQ (See drawing on page: 1-52)					
010	2565440-0000		1	INDUCTOR	
020	2862739-0000		1	INSULATING PLATE	
180	2547404-0000		1	BRACKET	
190	2547405-0000		1	BRACKET	
200	269151-0000		1	SHAFT	
220	2555625-0000		1	ROLL	
270	2555614-0000		1	BRACKET	
280	2555619-0000		1	BRACKET	
290	2555616-0000		1	ROLLER	
410	312105-0372		2	SCREW M6S ISO 4017 M6X25 A480	
440	312105-0327		2	SCREW M6S ISO 4017 M5X12 A480	
520	312105-0370		8	SCREW M6S ISO 4017 M6X20 A480	
550	312605-0314		1	HEXAGON NUT, M6M M5 A280	
610	312605-0312		1	HEXAGON NUT, M6M M4 A280	
TBA 0500B, TBA 1000B, TBA 1500S (See drawing on page: 1-52)					
010	2514514-0000		1	INDUCTOR	
020	2862742-0000		1	INSULATING PLATE	
180	2547404-0000		1	BRACKET	
190	2547405-0000		1	BRACKET	
200	269151-0000		1	SHAFT	
220	2555625-0000		1	ROLL	
270	2555614-0000		1	BRACKET	
280	2555615-0000		1	BRACKET	
290	2555616-0000		1	ROLLER	
410	312105-0372		2	SCREW M6S ISO 4017 M6X25 A480	
440	312105-0327		2	SCREW M6S ISO 4017 M5X12 A480	
520	312105-0370		8	SCREW M6S ISO 4017 M6X20 A480	
550	312605-0314		1	HEXAGON NUT, M6M M5 A280	
610	312605-0312		1	HEXAGON NUT, M6M M4 A280	
TBA 0500S (See drawing on page: 1-52)					
010	2672984-0000		1	INDUCTOR	
020	2862743-0000		1	INSULATING PLATE	
180	2547404-0000		1	BRACKET	
190	2547405-0000		1	BRACKET	
200	269151-0000		1	SHAFT	
220	2555625-0000		1	ROLL	
270	2555614-0000		1	BRACKET	
280	2555615-0000		1	BRACKET	
290	2555616-0000		1	ROLLER	
410	312105-0372		2	SCREW M6S ISO 4017 M6X25 A480	
440	312105-0327		2	SCREW M6S ISO 4017 M5X12 A480	
520	312105-0370		8	SCREW M6S ISO 4017 M6X20 A480	
550	312605-0314		1	HEXAGON NUT, M6M M5 A280	
610	312605-0312		1	HEXAGON NUT, M6M M4 A280	
TBA 0500SQ, TBA 1000SQ (See drawing on page: 1-52)					
010	2532925-0000		1	INDUCTOR	
020	2862744-0000		1	INSULATING PLATE	
180	2547404-0000		1	BRACKET	
190	2547405-0000		1	BRACKET	
200	269151-0000		1	SHAFT	
220	2555625-0000		1	ROLL	
270	2555614-0000		1	BRACKET	
280	2555615-0000		1	BRACKET	

Machine Type | Group Description | Used-In | Group Number | Page No

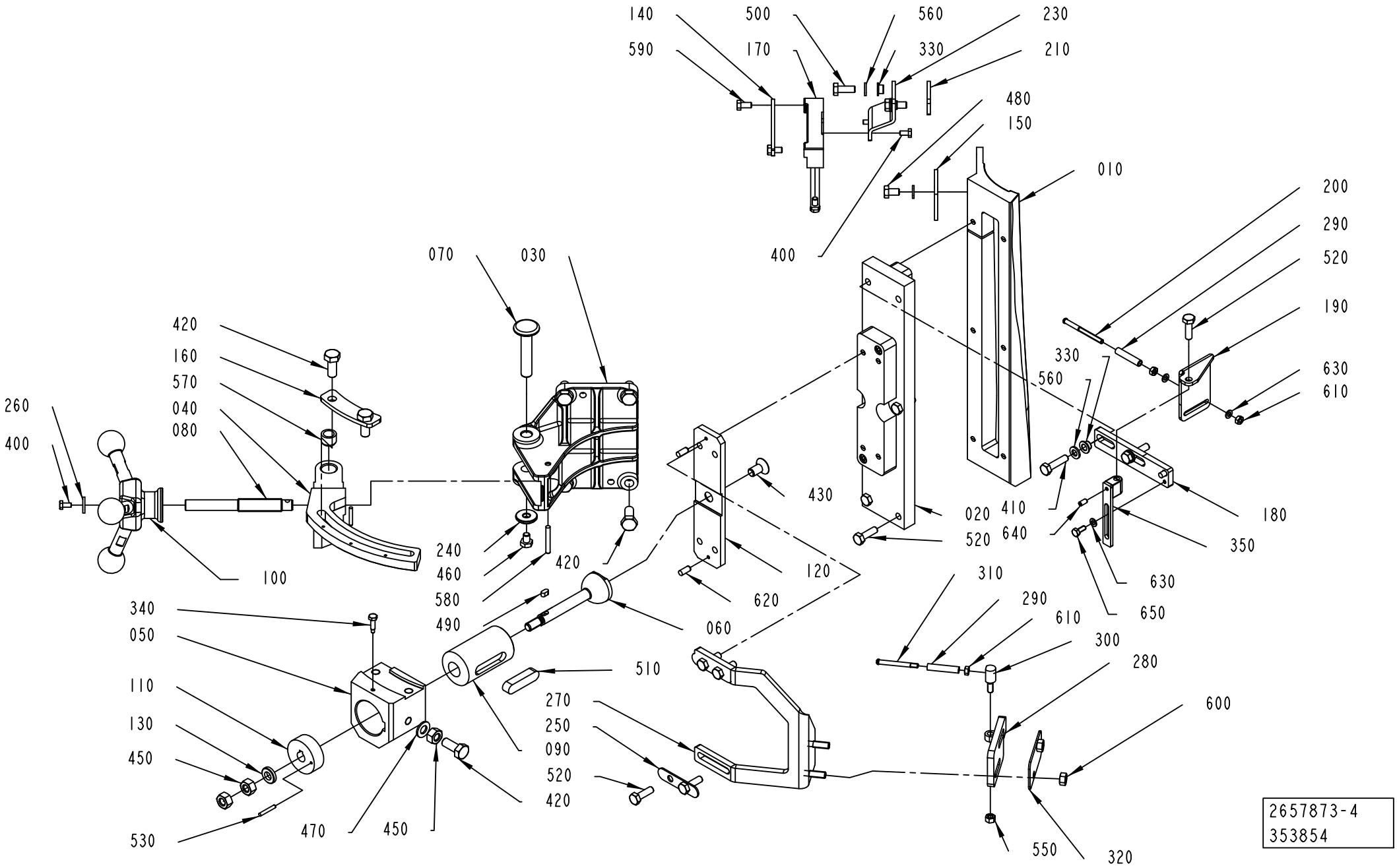
140
590
500
170
560
330
230
210
480
150
400
010
200
290
520
190
630
610
330
560
070
030
420
160
570
040
080
260
400
100
240
460
580
490
420
430
120
620
020
520
410
640
180
350
630
650
310
290
610
300
280
600
320
550
340
050
110
130
450
530
470
450
510
270
250
090
520
420
060
2657873-4
353854

Pos	Part No	UN	Qty	Description	Page No
TBA 0500SQ, TBA 1000SQ (Cont'd) (See drawing on page: 1-52)					
290	2555616-0000		1	ROLLER	
410	312105-0372		2	SCREW M6S ISO 4017 M6X25 A480	
440	312105-0327		2	SCREW M6S ISO 4017 M5X12 A480	
520	312105-0370		8	SCREW M6S ISO 4017 M6X20 A480	
550	312605-0314		1	HEXAGON NUT, M6M M5 A280	
610	312605-0312		1	HEXAGON NUT, M6M M4 A280	
TBA 1000S (See drawing on page: 1-52)					
010	2514522-0000		1	INDUCTOR	
020	2862745-0000		1	INSULATING PLATE	
180	2547404-0000		1	BRACKET	
190	2547405-0000		1	BRACKET	
200	269151-0000		1	SHAFT	
220	2555625-0000		1	ROLL	
270	2555614-0000		1	BRACKET	
280	2555615-0000		1	BRACKET	
290	2555616-0000		1	ROLLER	
410	312105-0374		2	SCREW M6S ISO 4014 M6X30 A480	
440	312105-0327		2	SCREW M6S ISO 4017 M5X12 A480	
520	312105-0370		4	SCREW M6S ISO 4017 M6X20 A480	
525	312105-0371		4	SCREW M6S ISO 4017 M6X22 A480	
550	312605-0314		1	HEXAGON NUT, M6M M5 A280	
610	312605-0312		1	HEXAGON NUT, M6M M4 A280	
TBA 1890S, TBA 2000S, TBA 1400B (See drawing on page: 1-52)					
010	2601247-0000		1	INDUCTOR	
020	2862746-0000		1	INSULATING PLATE	
180	2601249-0000		1	BRACKET	
190	2547405-0000		1	BRACKET	
200	269151-0000		1	SHAFT	
220	2555625-0000		1	ROLL	
270	2594636-0000		1	BRACKET	
280	2555615-0000		1	BRACKET	
290	2555616-0000		1	ROLLER	
410	312105-0372		2	SCREW M6S ISO 4017 M6X25 A480	
440	312105-0327		2	SCREW M6S ISO 4017 M5X12 A480	
520	312105-0370		7	SCREW M6S ISO 4017 M6X20 A480	
550	312605-0314		1	HEXAGON NUT, M6M M5 A280	
610	312605-0312		1	HEXAGON NUT, M6M M4 A280	
TPA 0330SQ (See drawing on page: 1-52)					
010	2695800-0000		1	INDUCTOR	
020	2862741-0000		1	INSULATING PLATE	
180	2547404-0000		1	BRACKET	
190	2547405-0000		1	BRACKET	
200	269151-0000		1	SHAFT	
220	2555625-0000		1	ROLL	
270	2555614-0000		1	BRACKET	
280	2555619-0000		1	BRACKET	
290	2555616-0000		1	ROLLER	
410	312105-0372		2	SCREW M6S ISO 4017 M6X25 A480	
440	312105-0327		2	SCREW M6S ISO 4017 M5X12 A480	
520	312105-0370		8	SCREW M6S ISO 4017 M6X20 A480	
550	312605-0314		1	HEXAGON NUT, M6M M5 A280	
610	312605-0312		1	HEXAGON NUT, M6M M4 A280	
TPA 0500SQ (See drawing on page: 1-54)					
010	2897152-0000		1	INDUCTOR	
020	2897150-0000		1	INSULATING PLATE	
180	2976353-0000		1	BRACKET	
190	2940946-0000		1	BRACKET	
200	2887790-0000		1	SHAFT	
270	2555614-0000		1	BRACKET	
280	2555619-0000		1	BRACKET	
290	2555616-0000		2	ROLLER	
350	2976352-0000		1	BRACKET	
410	312105-0374		2	SCREW M6S ISO 4014 M6X30 A480	
520	312105-0370		9	SCREW M6S ISO 4017 M6X20 A480	
550	312605-0314		3	HEXAGON NUT, M6M M5 A280	
610	312605-0312		4	HEXAGON NUT, M6M M4 A280	
630	315105-0136		3	WASHER BRB 4,3X8 RFR	
640	312318-0287		1	SCREW ISO4029 M4X8 A4	
650	312105-0289		1	SCREW M6S H4X10 A4 70 ISO4017/DIN933	
TPA 1000SQ, TPA 0750SQ, TGA 1000SQ, TGA 0750SQ, TGA 0500SQ (See drawing on page: 1-52)					
010	2601289-0000		1	INDUCTOR	
020	2862748-0000		1	INSULATING PLATE	
180	2547404-0000		1	BRACKET	
190	2547405-0000		1	BRACKET	
200	269151-0000		1	SHAFT	
220	2555625-0000		1	ROLL	
270	2555614-0000		1	BRACKET	
280	2555615-0000		1	BRACKET	
290	2555616-0000		1	ROLLER	
410	312105-0372		2	SCREW M6S ISO 4017 M6X25 A480	
440	312105-0327		2	SCREW M6S ISO 4017 M5X12 A480	
520	312105-0370		8	SCREW M6S ISO 4017 M6X20 A480	
550	312605-0314		1	HEXAGON NUT, M6M M5 A280	

See previous drawings pages: 1-52, 1-54.

Pos	Part No	UN	Qty	Description	Page No
TPA 1000SQ, TPA 0750SQ, TGA 1000SQ, TGA 0750SQ, TGA 0500SQ (Cont'd) (See drawing on page: 1-52)					
610	312605-0312		1	HEXAGON NUT, M6M M4 A280	
Common Parts					
030	2544897-0000		1	BRACKET	
040	2694714-0000		1	GUIDE	
050	2694715-0000		1	SUPPORT	
060	2641000-0000		1	SHAFT	
070	2547388-0000		1	AXLE PIN	
080	2544898-0000		1	SHAFT	
090	2640991-0000		1	SLIDE	
100	2547376-0200		1	KNOB	**1-59**
110	2640992-0000		1	SLIDE	
120	2640993-0000		1	PLATE	
130	315115-0165		1	WASHER PLAIN, TBRB 8,4/16 H=3	
140	2508309-0000		2	PLATE	
150	2508311-0000		2	PLATE	
160	2694716-0000		1	PLATE	
170	2531060-0000		1	BRACKET	
210	2532898-0000		1	BRACKET	
230	2532899-0000		1	BRACKET	
240	2508297-0000		1	WASHER	
250	2555623-0000		2	COVER	
260	2547377-0000		1	WASHER	
300	2555617-0000		1	PIN	
310	2555618-0000		1	SHAFT	
320	2555620-0000		1	COVER	
330	2508292-0000		4	BUSHING	
340	2725526-0000		1	SCREW	
400	312105-0287		3	SCREW M6S ISO 4017 M4X8 A470	
420	312105-0451		7	SCREW M6S ISO 4017 M8X20 A480	
430	312155-0449		1	SCREW DIN 7991 MF6S M8X16 A4 70	
450	312605-0318		3	HEXAGON NUT, M6M M8 A280	
460	312105-0362		1	SCREW M6S ISO 4017 M6X8 A480	
470	315105-0165		1	WASHER BRB 8,4X16 RFR	
480	312105-0364		2	SCREW M6S ISO 4017 M6X10 A480	
490	315705-0164		1	PARALLEL KEY W. ROUND ENDS 4X4X8 MM	
500	312105-0368		2	SCREW M6S ISO 4017 M6X16 A480	
510	315705-0301		1	PARALLEL KEY W. ROUND ENDS 10X8X40 MM	
530	311103-0238		2	PARALLEL PIN ISO 2338 3M6X20 A1	
560	315105-0153		6	WASHER BRB 6,4X12 RFR	
570	90600-3313		2	BUSHING, 10X14X10 MM	
580	311103-0276		1	PARALLEL PIN ISO 2338 4M6X30 A1	
590	312105-0325		4	SCREW M6S ISO 4017 M5X10 A480	
600	312605-0316		2	HEXAGON NUT, M6M M6 A280	
620	311103-0306		2	PARALLEL PIN ISO 2338 5M6X12 A1	

Machine Type | Group Description | Used-In | Group Number | Page No

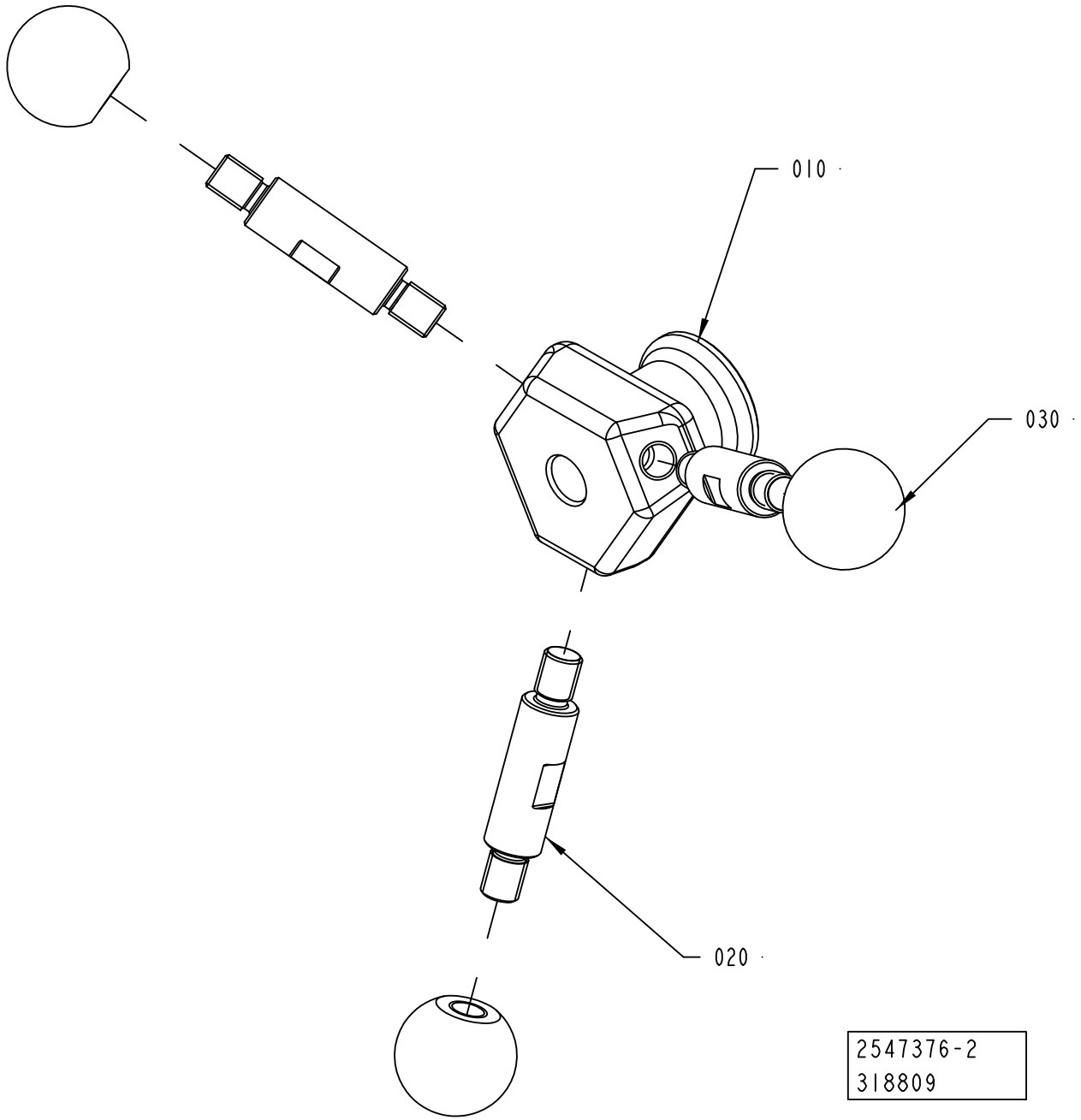
010
030
020
2547376-2
318809

ECM: 318865 - 20070913
Group number: 2547376-0200
Assembly Drawing: 2547376-2_1_AA

Pos	Part No	UN	Qty	Description	Page No
-					
010	2874716-0000		1	BODY	
020	2874715-0000		3	STUD SCREW	
030	2874717-0000		3	KNOB	

Pos	Part No	UN	Qty	Description	Page No

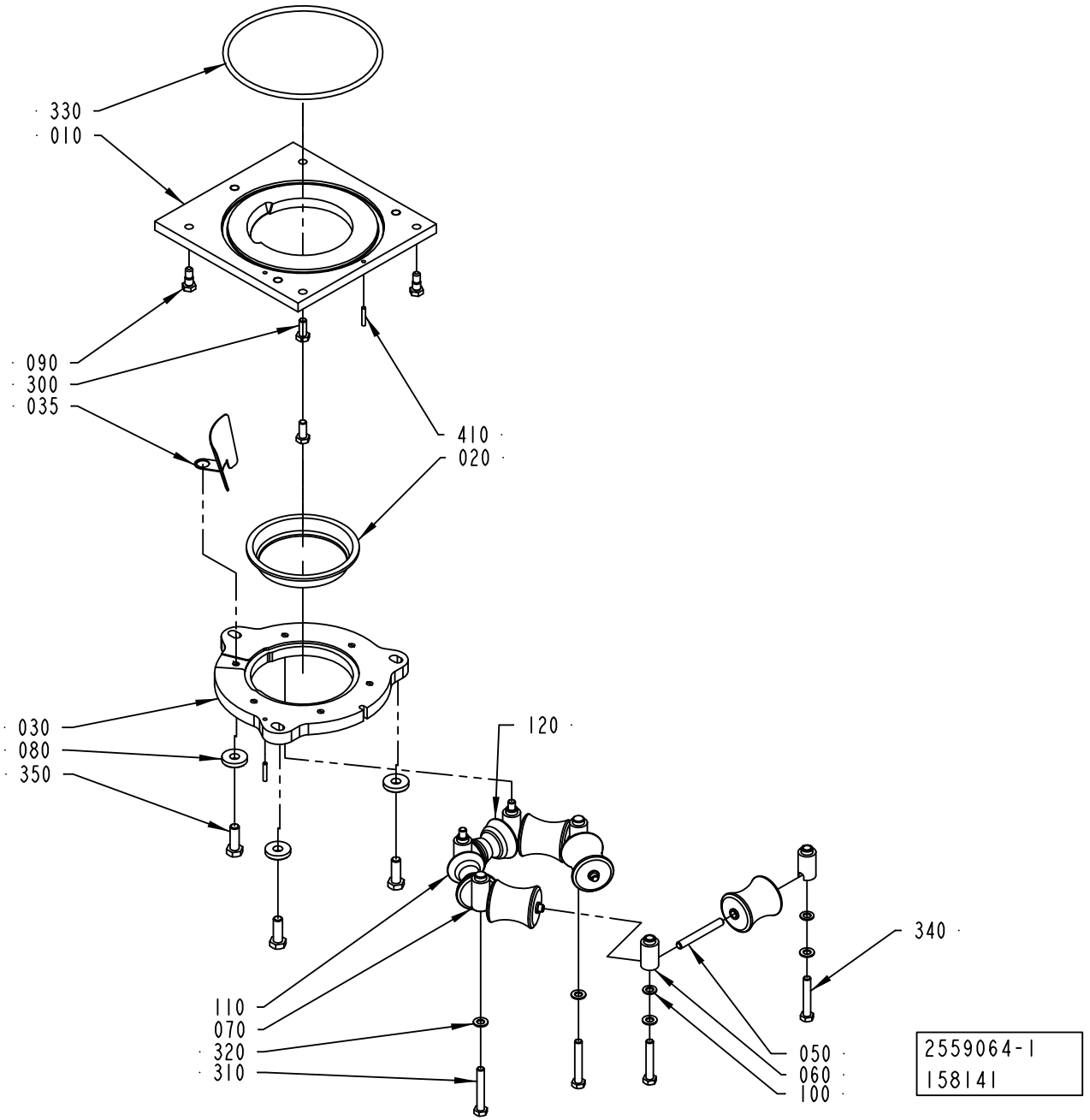
330
010
090
300
035
410
020
030
080
350
120
110
070
320
310
340
050
060
100
2559064-1
158141

ECM: 409287 - 20091002
Group number: 2559064-0100
Assembly Drawing: 2559064-1_1_AB

This list covers pages from 1-60 to 1-69

Pos	Part No	UN	Qty	Description	Page No
TBA 1000B STDA7 (See drawing on page: 1-62)					
010	2562687-0000		1	PLATE	
020	466042-0000		1	SEAL	
030	2562688-0000		1	RING	
035	1539454-0000		1	GUIDE	
040	466046-0000		4	ROLLER	
050	263655-0009		6	SHAFT	
060	1036954-0000		4	AXLE SUPPORT	
070	1036955-0000		2	AXLE SUPPORT	
110	2592548-0000		1	ROLLER	
120	2592549-0000		1	ROLLER	
310	312105-0462		2	SCREW M6S ISO 4014 M8X55 A480	
340	312109-0461		4	SCREW M6S ISO 4017 M8X50 A480	
TBA 1000E LIGHTCAP 30 (See drawing on page: 1-68)					
010	2794725-0000		1	PLATE	
020	2957900-0000		1	GASKET	
030	2794726-0000		1	RING	
040	1490762-0000		5	ROLLER	
050	263655-0009		6	SHAFT	
060	2960214-0000		4	AXLE SUPPORT	
070	2960215-0000		2	AXLE SUPPORT	
110	3008102-0000		1	ROLLER	
310	312105-0465		2	SCREW M6S ISO 4014 M8X70 A480	
340	312105-0463		4	SCREW M6S ISO 4014 M8X60 A480	
TBA 1000M STDA7 (See drawing on page: 1-60)					
010	2562687-0000		1	PLATE	
020	3026688-0000		1	SEAL	
030	2562688-0000		1	RING	
035	1539454-0000		1	GUIDE	
040	3013416-0000		1	ROLLER	
050	263655-0009		6	SHAFT	
060	1036954-0000		4	AXLE SUPPORT	
070	1036955-0000		2	AXLE SUPPORT	
110	3013417-0000		1	ROLLER	
120	3015597-0000		1	ROLLER	
310	312105-0462		2	SCREW M6S ISO 4014 M8X55 A480	
340	312109-0461		4	SCREW M6S ISO 4017 M8X50 A480	
TBA 1000S LIGHTCAP (See drawing on page: 1-64)					
010	2794725-0000		1	PLATE	
020	2811775-0000		1	SEAL	
030	2794726-0000		1	RING	
040	573504-0000		4	ROLLER	
050	263655-0009		6	SHAFT	
060	1036954-0000		4	AXLE SUPPORT	
070	1036955-0000		2	AXLE SUPPORT	
110	2716548-0000		1	ROLLER	
120	2716547-0000		1	ROLLER	
310	312105-0462		2	SCREW M6S ISO 4014 M8X55 A480	
340	312109-0461		4	SCREW M6S ISO 4017 M8X50 A480	
TBA 1000S STDA7 (See drawing on page: 1-60)					
010	2562687-0000		1	PLATE	
020	567743-0000		1	SEAL	
030	2562688-0000		1	RING	
035	1523696-0000		1	GUIDE	
040	573504-0000		4	ROLLER	
050	263655-0009		6	SHAFT	
060	1036954-0000		4	AXLE SUPPORT	
070	1036955-0000		2	AXLE SUPPORT	
110	2592546-0000		1	ROLLER	
120	2592547-0000		1	ROLLER	
310	312105-0462		2	SCREW M6S ISO 4014 M8X55 A480	
340	312109-0461		4	SCREW M6S ISO 4017 M8X50 A480	
TPA 500SQ LIGHTCAP (See drawing on page: 1-66)					
010	2958990-0000		1	PLATE	
020	2958992-0000		1	SEAL	
030	2958991-0000		1	PLATE	
040	2552655-0000		5	ROLLER	
050	263655-0007		6	SHAFT	
060	1036954-0000		4	AXLE SUPPORT	
070	1036955-0000		2	AXLE SUPPORT	
310	312105-0462		2	SCREW M6S ISO 4014 M8X55 A480	
340	312109-0461		4	SCREW M6S ISO 4017 M8X50 A480	
Common Parts					
080	315125-0173		3	WASHER TBRSB 10,5X28X6 A4	
090	1037885-0000		2	REAMED BOLT	
100	1129431-0000		4	WASHER	
300	312105-0451		2	SCREW M6S ISO 4017 M8X20 A480	
320	315115-0165		6	WASHER PLAIN, TBRB 8,4/16 H=3	
330	315204-0324		1	O-RING 164,3X5,7 MM	
350	312105-0495		3	SCREW M6S ISO 4017 M10X30 A480	
370	311103-1274		2	PARALLEL PIN ISO 2338 4M6X24 A1	

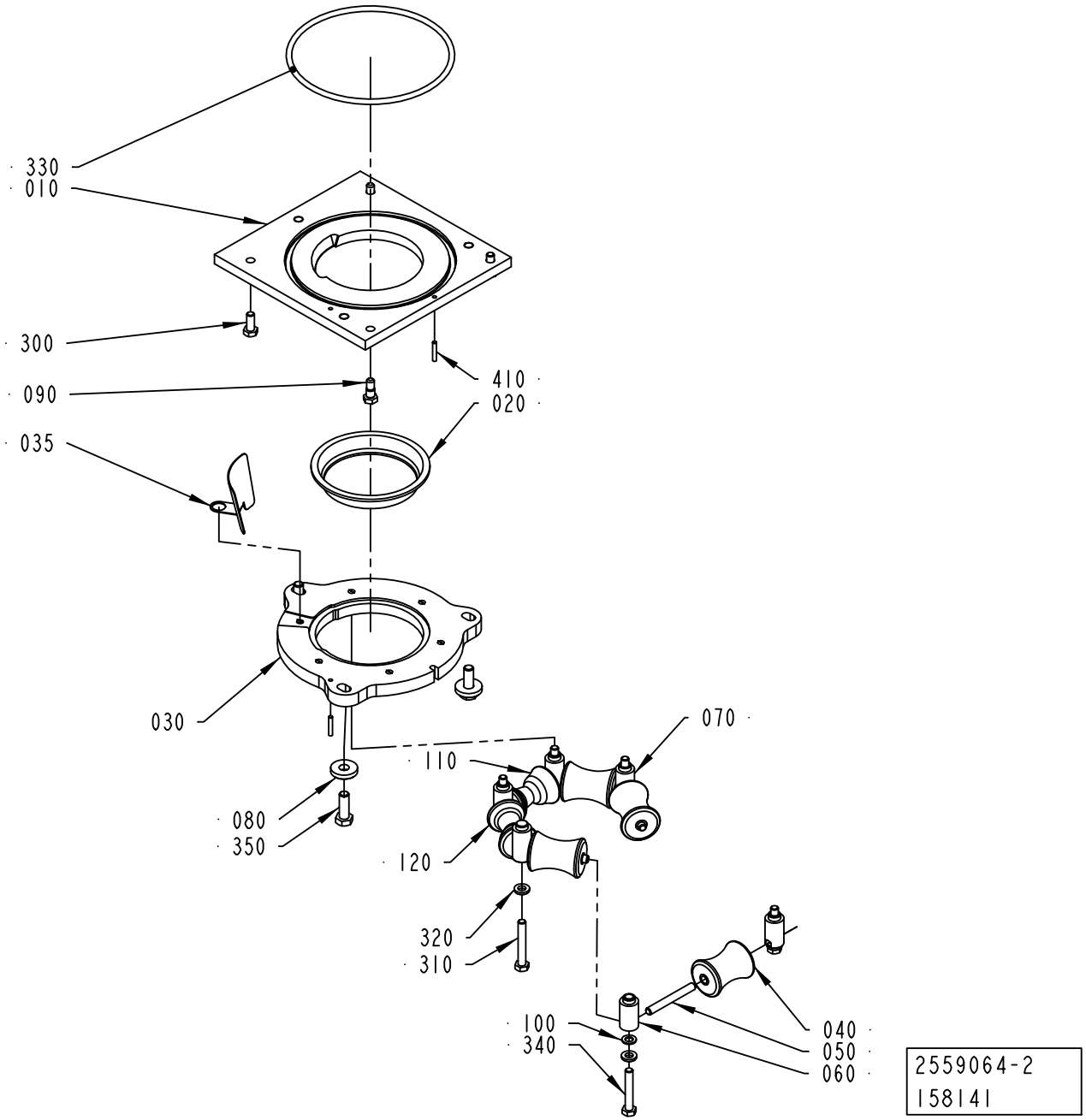
330
010
300
090
035
030
080
350
410
020
070
110
120
320
310
100
340
040
050
060
2559064-2
158141

ECM: 409287 - 20091002
Group number: 2559064-0100
Assembly Drawing: 2559064-2_1_AB

This list covers pages from 1-60 to 1-69

Pos	Part No	UN	Qty	Description	Page No
TBA 1000B STDA7 (See drawing on page: 1-62)					
010	2562687-0000		1	PLATE	
020	466042-0000		1	SEAL	
030	2562688-0000		1	RING	
035	1539454-0000		1	GUIDE	
040	466046-0000		4	ROLLER	
050	263655-0009		6	SHAFT	
060	1036954-0000		4	AXLE SUPPORT	
070	1036955-0000		2	AXLE SUPPORT	
110	2592548-0000		1	ROLLER	
120	2592549-0000		1	ROLLER	
310	312105-0462		2	SCREW M6S ISO 4014 M8X55 A480	
340	312109-0461		4	SCREW M6S ISO 4017 M8X50 A480	
TBA 1000E LIGHTCAP 30 (See drawing on page: 1-68)					
010	2794725-0000		1	PLATE	
020	2957900-0000		1	GASKET	
030	2794726-0000		1	RING	
040	1490762-0000		5	ROLLER	
050	263655-0009		6	SHAFT	
060	2960214-0000		4	AXLE SUPPORT	
070	2960215-0000		2	AXLE SUPPORT	
110	3008102-0000		1	ROLLER	
310	312105-0465		2	SCREW M6S ISO 4014 M8X70 A480	
340	312105-0463		4	SCREW M6S ISO 4014 M8X60 A480	
TBA 1000M STDA7 (See drawing on page: 1-60)					
010	2562687-0000		1	PLATE	
020	3026688-0000		1	SEAL	
030	2562688-0000		1	RING	
035	1539454-0000		1	GUIDE	
040	3013416-0000		1	ROLLER	
050	263655-0009		6	SHAFT	
060	1036954-0000		4	AXLE SUPPORT	
070	1036955-0000		2	AXLE SUPPORT	
110	3013417-0000		1	ROLLER	
120	3015597-0000		1	ROLLER	
310	312105-0462		2	SCREW M6S ISO 4014 M8X55 A480	
340	312109-0461		4	SCREW M6S ISO 4017 M8X50 A480	
TBA 1000S LIGHTCAP (See drawing on page: 1-64)					
010	2794725-0000		1	PLATE	
020	2811775-0000		1	SEAL	
030	2794726-0000		1	RING	
040	573504-0000		4	ROLLER	
050	263655-0009		6	SHAFT	
060	1036954-0000		4	AXLE SUPPORT	
070	1036955-0000		2	AXLE SUPPORT	
110	2716548-0000		1	ROLLER	
120	2716547-0000		1	ROLLER	
310	312105-0462		2	SCREW M6S ISO 4014 M8X55 A480	
340	312109-0461		4	SCREW M6S ISO 4017 M8X50 A480	
TBA 1000S STDA7 (See drawing on page: 1-60)					
010	2562687-0000		1	PLATE	
020	567743-0000		1	SEAL	
030	2562688-0000		1	RING	
035	1523696-0000		1	GUIDE	
040	573504-0000		4	ROLLER	
050	263655-0009		6	SHAFT	
060	1036954-0000		4	AXLE SUPPORT	
070	1036955-0000		2	AXLE SUPPORT	
110	2592546-0000		1	ROLLER	
120	2592547-0000		1	ROLLER	
310	312105-0462		2	SCREW M6S ISO 4014 M8X55 A480	
340	312109-0461		4	SCREW M6S ISO 4017 M8X50 A480	
TPA 500SQ LIGHTCAP (See drawing on page: 1-66)					
010	2958990-0000		1	PLATE	
020	2958992-0000		1	SEAL	
030	2958991-0000		1	PLATE	
040	2552655-0000		5	ROLLER	
050	263655-0007		6	SHAFT	
060	1036954-0000		4	AXLE SUPPORT	
070	1036955-0000		2	AXLE SUPPORT	
310	312105-0462		2	SCREW M6S ISO 4014 M8X55 A480	
340	312109-0461		4	SCREW M6S ISO 4017 M8X50 A480	
Common Parts					
080	315125-0173		3	WASHER TBRSB 10,5X28X6 A4	
090	1037885-0000		2	REAMED BOLT	
100	1129431-0000		4	WASHER	
300	312105-0451		2	SCREW M6S ISO 4017 M8X20 A480	
320	315115-0165		6	WASHER PLAIN, TBRB 8,4/16 H=3	
330	315204-0324		1	O-RING 164,3X5,7 MM	
350	312105-0495		3	SCREW M6S ISO 4017 M10X30 A480	
370	311103-1274		2	PARALLEL PIN ISO 2338 4M6X24 A1	

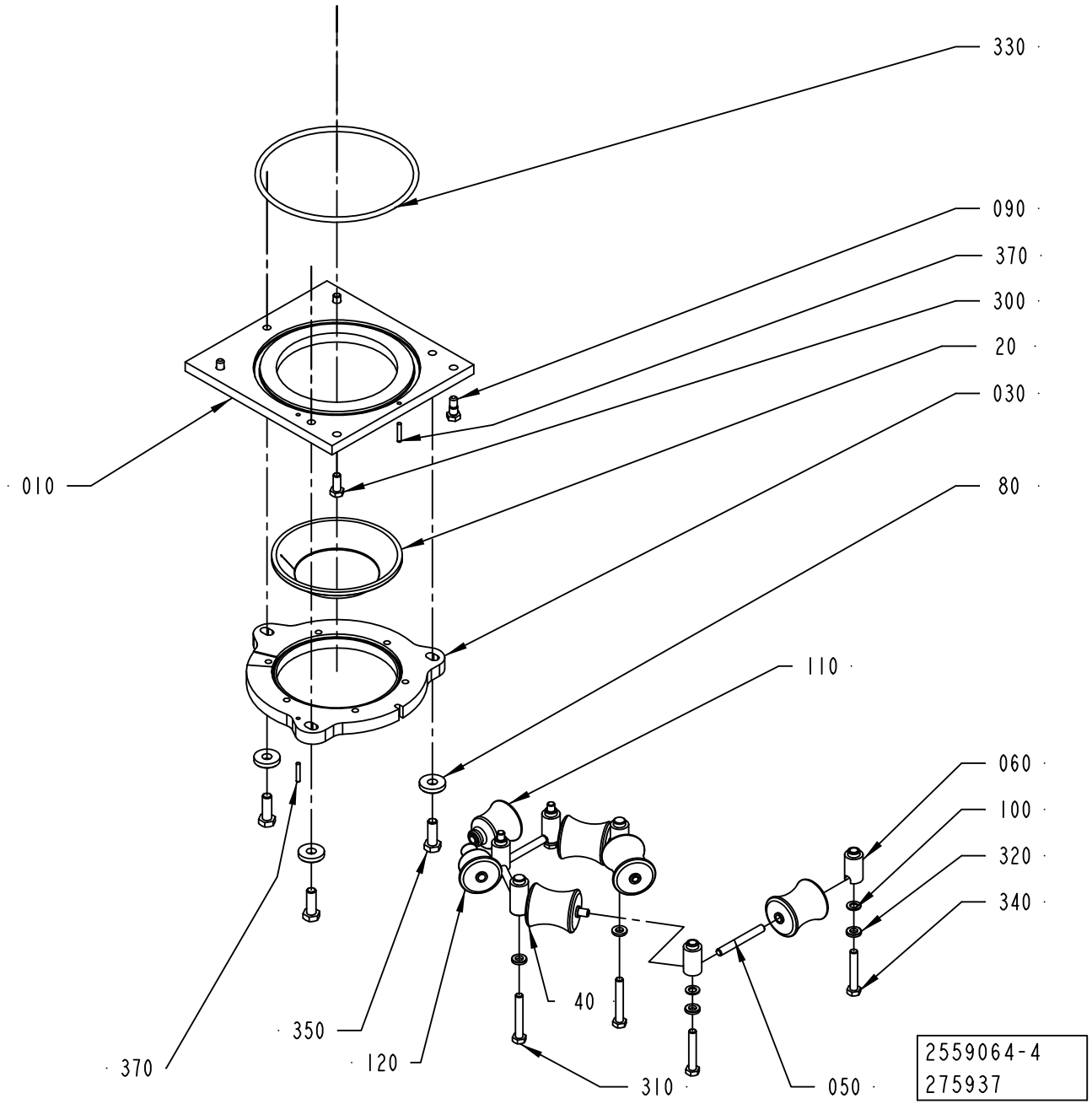
330
090
370
300
20
030
80
010
110
060
100
320
340
40
350
120
370
310
050
2559064-4
275937

ECM: 409287 - 20091002
Group number: 2559064-0100
Assembly Drawing: 2559064-4_1_AB

This list covers pages from 1-60 to 1-69

Pos	Part No	UN	Qty	Description	Page No
TBA 1000B STDA7 (See drawing on page: 1-62)					
010	2562687-0000		1	PLATE	
020	466042-0000		1	SEAL	
030	2562688-0000		1	RING	
035	1539454-0000		1	GUIDE	
040	466046-0000		4	ROLLER	
050	263655-0009		6	SHAFT	
060	1036954-0000		4	AXLE SUPPORT	
070	1036955-0000		2	AXLE SUPPORT	
110	2592548-0000		1	ROLLER	
120	2592549-0000		1	ROLLER	
310	312105-0462		2	SCREW M6S ISO 4014 M8X55 A480	
340	312109-0461		4	SCREW M6S ISO 4017 M8X50 A480	
TBA 1000E LIGHTCAP 30 (See drawing on page: 1-68)					
010	2794725-0000		1	PLATE	
020	2957900-0000		1	GASKET	
030	2794726-0000		1	RING	
040	1490762-0000		5	ROLLER	
050	263655-0009		6	SHAFT	
060	2960214-0000		4	AXLE SUPPORT	
070	2960215-0000		2	AXLE SUPPORT	
110	3008102-0000		1	ROLLER	
310	312105-0465		2	SCREW M6S ISO 4014 M8X70 A480	
340	312105-0463		4	SCREW M6S ISO 4014 M8X60 A480	
TBA 1000M STDA7 (See drawing on page: 1-60)					
010	2562687-0000		1	PLATE	
020	3026688-0000		1	SEAL	
030	2562688-0000		1	RING	
035	1539454-0000		1	GUIDE	
040	3013416-0000		1	ROLLER	
050	263655-0009		6	SHAFT	
060	1036954-0000		4	AXLE SUPPORT	
070	1036955-0000		2	AXLE SUPPORT	
110	3013417-0000		1	ROLLER	
120	3015597-0000		1	ROLLER	
310	312105-0462		2	SCREW M6S ISO 4014 M8X55 A480	
340	312109-0461		4	SCREW M6S ISO 4017 M8X50 A480	
TBA 1000S LIGHTCAP (See drawing on page: 1-64)					
010	2794725-0000		1	PLATE	
020	2811775-0000		1	SEAL	
030	2794726-0000		1	RING	
040	573504-0000		4	ROLLER	
050	263655-0009		6	SHAFT	
060	1036954-0000		4	AXLE SUPPORT	
070	1036955-0000		2	AXLE SUPPORT	
110	2716548-0000		1	ROLLER	
120	2716547-0000		1	ROLLER	
310	312105-0462		2	SCREW M6S ISO 4014 M8X55 A480	
340	312109-0461		4	SCREW M6S ISO 4017 M8X50 A480	
TBA 1000S STDA7 (See drawing on page: 1-60)					
010	2562687-0000		1	PLATE	
020	567743-0000		1	SEAL	
030	2562688-0000		1	RING	
035	1523696-0000		1	GUIDE	
040	573504-0000		4	ROLLER	
050	263655-0009		6	SHAFT	
060	1036954-0000		4	AXLE SUPPORT	
070	1036955-0000		2	AXLE SUPPORT	
110	2592546-0000		1	ROLLER	
120	2592547-0000		1	ROLLER	
310	312105-0462		2	SCREW M6S ISO 4014 M8X55 A480	
340	312109-0461		4	SCREW M6S ISO 4017 M8X50 A480	
TPA 500SQ LIGHTCAP (See drawing on page: 1-66)					
010	2958990-0000		1	PLATE	
020	2958992-0000		1	SEAL	
030	2958991-0000		1	PLATE	
040	2552655-0000		5	ROLLER	
050	263655-0007		6	SHAFT	
060	1036954-0000		4	AXLE SUPPORT	
070	1036955-0000		2	AXLE SUPPORT	
310	312105-0462		2	SCREW M6S ISO 4014 M8X55 A480	
340	312109-0461		4	SCREW M6S ISO 4017 M8X50 A480	
Common Parts					
080	315125-0173		3	WASHER TBRSB 10,5X28X6 A4	
090	1037885-0000		2	REAMED BOLT	
100	1129431-0000		4	WASHER	
300	312105-0451		2	SCREW M6S ISO 4017 M8X20 A480	
320	315115-0165		6	WASHER PLAIN, TBRB 8,4/16 H=3	
330	315204-0324		1	O-RING 164,3X5,7 MM	
350	312105-0495		3	SCREW M6S ISO 4017 M10X30 A480	
370	311103-1274		2	PARALLEL PIN ISO 2338 4M6X24 A1	

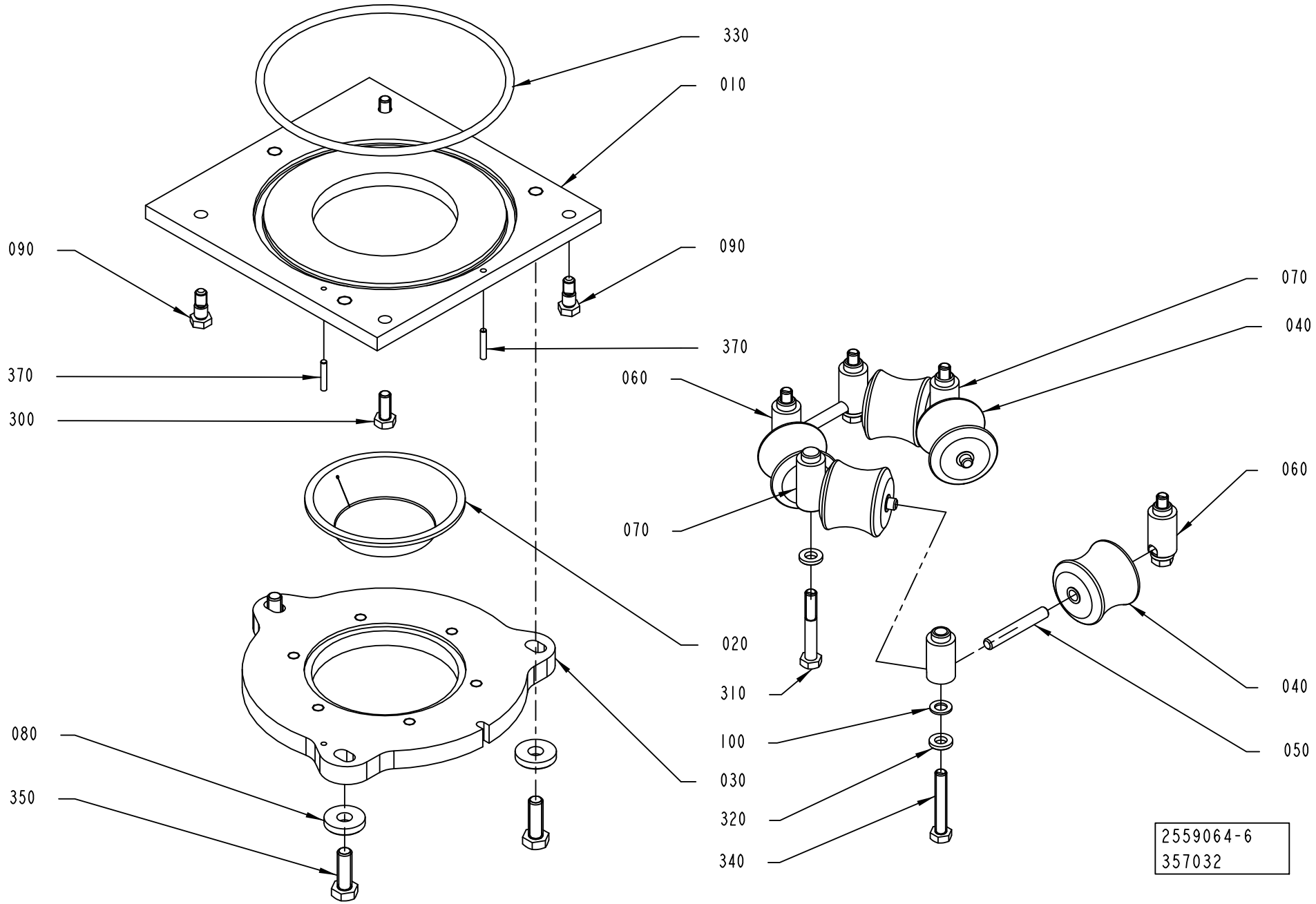
330
010
090
090
370
370
300
070
040
060
060
070
020
310
040
100
050
080
030
350
320
340
2559064-6
357032

ECM: 409287 - 20091002
Group number: 2559064-0100
Assembly Drawing: 2559064-6_1_AA

This list covers pages from 1-60 to 1-69

Pos	Part No	UN	Qty	Description	Page No
TBA 1000B STDA7 (See drawing on page: 1-62)					
010	2562687-0000		1	PLATE	
020	466042-0000		1	SEAL	
030	2562688-0000		1	RING	
035	1539454-0000		1	GUIDE	
040	466046-0000		4	ROLLER	
050	263655-0009		6	SHAFT	
060	1036954-0000		4	AXLE SUPPORT	
070	1036955-0000		2	AXLE SUPPORT	
110	2592548-0000		1	ROLLER	
120	2592549-0000		1	ROLLER	
310	312105-0462		2	SCREW M6S ISO 4014 M8X55 A480	
340	312109-0461		4	SCREW M6S ISO 4017 M8X50 A480	
TBA 1000E LIGHTCAP 30 (See drawing on page: 1-68)					
010	2794725-0000		1	PLATE	
020	2957900-0000		1	GASKET	
030	2794726-0000		1	RING	
040	1490762-0000		5	ROLLER	
050	263655-0009		6	SHAFT	
060	2960214-0000		4	AXLE SUPPORT	
070	2960215-0000		2	AXLE SUPPORT	
110	3008102-0000		1	ROLLER	
310	312105-0465		2	SCREW M6S ISO 4014 M8X70 A480	
340	312105-0463		4	SCREW M6S ISO 4014 M8X60 A480	
TBA 1000M STDA7 (See drawing on page: 1-60)					
010	2562687-0000		1	PLATE	
020	3026688-0000		1	SEAL	
030	2562688-0000		1	RING	
035	1539454-0000		1	GUIDE	
040	3013416-0000		1	ROLLER	
050	263655-0009		6	SHAFT	
060	1036954-0000		4	AXLE SUPPORT	
070	1036955-0000		2	AXLE SUPPORT	
110	3013417-0000		1	ROLLER	
120	3015597-0000		1	ROLLER	
310	312105-0462		2	SCREW M6S ISO 4014 M8X55 A480	
340	312109-0461		4	SCREW M6S ISO 4017 M8X50 A480	
TBA 1000S LIGHTCAP (See drawing on page: 1-64)					
010	2794725-0000		1	PLATE	
020	2811775-0000		1	SEAL	
030	2794726-0000		1	RING	
040	573504-0000		4	ROLLER	
050	263655-0009		6	SHAFT	
060	1036954-0000		4	AXLE SUPPORT	
070	1036955-0000		2	AXLE SUPPORT	
110	2716548-0000		1	ROLLER	
120	2716547-0000		1	ROLLER	
310	312105-0462		2	SCREW M6S ISO 4014 M8X55 A480	
340	312109-0461		4	SCREW M6S ISO 4017 M8X50 A480	
TBA 1000S STDA7 (See drawing on page: 1-60)					
010	2562687-0000		1	PLATE	
020	567743-0000		1	SEAL	
030	2562688-0000		1	RING	
035	1523696-0000		1	GUIDE	
040	573504-0000		4	ROLLER	
050	263655-0009		6	SHAFT	
060	1036954-0000		4	AXLE SUPPORT	
070	1036955-0000		2	AXLE SUPPORT	
110	2592546-0000		1	ROLLER	
120	2592547-0000		1	ROLLER	
310	312105-0462		2	SCREW M6S ISO 4014 M8X55 A480	
340	312109-0461		4	SCREW M6S ISO 4017 M8X50 A480	
TPA 500SQ LIGHTCAP (See drawing on page: 1-66)					
010	2958990-0000		1	PLATE	
020	2958992-0000		1	SEAL	
030	2958991-0000		1	PLATE	
040	2552655-0000		5	ROLLER	
050	263655-0007		6	SHAFT	
060	1036954-0000		4	AXLE SUPPORT	
070	1036955-0000		2	AXLE SUPPORT	
310	312105-0462		2	SCREW M6S ISO 4014 M8X55 A480	
340	312109-0461		4	SCREW M6S ISO 4017 M8X50 A480	
Common Parts					
080	315125-0173		3	WASHER TBRSB 10,5X28X6 A4	
090	1037885-0000		2	REAMED BOLT	
100	1129431-0000		4	WASHER	
300	312105-0451		2	SCREW M6S ISO 4017 M8X20 A480	
320	315115-0165		6	WASHER PLAIN, TBRB 8,4/16 H=3	
330	315204-0324		1	O-RING 164,3X5,7 MM	
350	312105-0495		3	SCREW M6S ISO 4017 M10X30 A480	
370	311103-1274		2	PARALLEL PIN ISO 2338 4M6X24 A1	

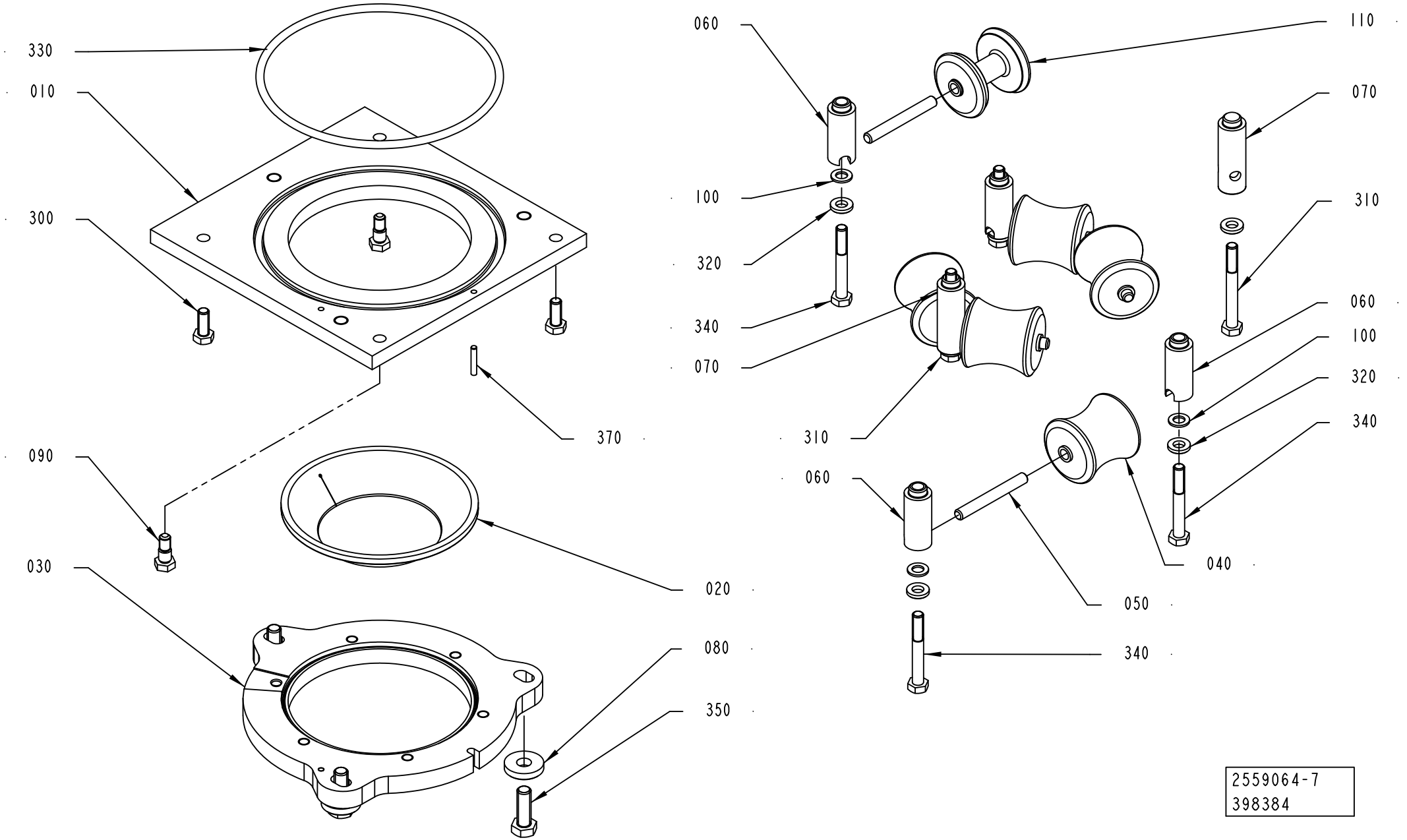
330
010
300
090
030
370
020
080
350
060
100
320
340
070
110
070
310
060
100
320
340
310
060
040
050
340
2559064-7
398384

ECM: 409287 - 20091002
Group number: 2559064-0100
Assembly Drawing: 2559064-7_1_AB

This list covers pages from 1-60 to 1-69

Pos	Part No	UN	Qty	Description	Page No
TBA 1000B STDA7 (See drawing on page: 1-62)					
010	2562687-0000		1	PLATE	
020	466042-0000		1	SEAL	
030	2562688-0000		1	RING	
035	1539454-0000		1	GUIDE	
040	466046-0000		4	ROLLER	
050	263655-0009		6	SHAFT	
060	1036954-0000		4	AXLE SUPPORT	
070	1036955-0000		2	AXLE SUPPORT	
110	2592548-0000		1	ROLLER	
120	2592549-0000		1	ROLLER	
310	312105-0462		2	SCREW M6S ISO 4014 M8X55 A480	
340	312109-0461		4	SCREW M6S ISO 4017 M8X50 A480	
TBA 1000E LIGHTCAP 30 (See drawing on page: 1-68)					
010	2794725-0000		1	PLATE	
020	2957900-0000		1	GASKET	
030	2794726-0000		1	RING	
040	1490762-0000		5	ROLLER	
050	263655-0009		6	SHAFT	
060	2960214-0000		4	AXLE SUPPORT	
070	2960215-0000		2	AXLE SUPPORT	
110	3008102-0000		1	ROLLER	
310	312105-0465		2	SCREW M6S ISO 4014 M8X70 A480	
340	312105-0463		4	SCREW M6S ISO 4014 M8X60 A480	
TBA 1000M STDA7 (See drawing on page: 1-60)					
010	2562687-0000		1	PLATE	
020	3026688-0000		1	SEAL	
030	2562688-0000		1	RING	
035	1539454-0000		1	GUIDE	
040	3013416-0000		1	ROLLER	
050	263655-0009		6	SHAFT	
060	1036954-0000		4	AXLE SUPPORT	
070	1036955-0000		2	AXLE SUPPORT	
110	3013417-0000		1	ROLLER	
120	3015597-0000		1	ROLLER	
310	312105-0462		2	SCREW M6S ISO 4014 M8X55 A480	
340	312109-0461		4	SCREW M6S ISO 4017 M8X50 A480	
TBA 1000S LIGHTCAP (See drawing on page: 1-64)					
010	2794725-0000		1	PLATE	
020	2811775-0000		1	SEAL	
030	2794726-0000		1	RING	
040	573504-0000		4	ROLLER	
050	263655-0009		6	SHAFT	
060	1036954-0000		4	AXLE SUPPORT	
070	1036955-0000		2	AXLE SUPPORT	
110	2716548-0000		1	ROLLER	
120	2716547-0000		1	ROLLER	
310	312105-0462		2	SCREW M6S ISO 4014 M8X55 A480	
340	312109-0461		4	SCREW M6S ISO 4017 M8X50 A480	
TBA 1000S STDA7 (See drawing on page: 1-60)					
010	2562687-0000		1	PLATE	
020	567743-0000		1	SEAL	
030	2562688-0000		1	RING	
035	1523696-0000		1	GUIDE	
040	573504-0000		4	ROLLER	
050	263655-0009		6	SHAFT	
060	1036954-0000		4	AXLE SUPPORT	
070	1036955-0000		2	AXLE SUPPORT	
110	2592546-0000		1	ROLLER	
120	2592547-0000		1	ROLLER	
310	312105-0462		2	SCREW M6S ISO 4014 M8X55 A480	
340	312109-0461		4	SCREW M6S ISO 4017 M8X50 A480	
TPA 500SQ LIGHTCAP (See drawing on page: 1-66)					
010	2958990-0000		1	PLATE	
020	2958992-0000		1	SEAL	
030	2958991-0000		1	PLATE	
040	2552655-0000		5	ROLLER	
050	263655-0007		6	SHAFT	
060	1036954-0000		4	AXLE SUPPORT	
070	1036955-0000		2	AXLE SUPPORT	
310	312105-0462		2	SCREW M6S ISO 4014 M8X55 A480	
340	312109-0461		4	SCREW M6S ISO 4017 M8X50 A480	
Common Parts					
080	315125-0173		3	WASHER TBRSB 10,5X28X6 A4	
090	1037885-0000		2	REAMED BOLT	
100	1129431-0000		4	WASHER	
300	312105-0451		2	SCREW M6S ISO 4017 M8X20 A480	
320	315115-0165		6	WASHER PLAIN, TBRB 8,4/16 H=3	
330	315204-0324		1	O-RING 164,3X5,7 MM	
350	312105-0495		3	SCREW M6S ISO 4017 M10X30 A480	
370	311103-1274		2	PARALLEL PIN ISO 2338 4M6X24 A1	

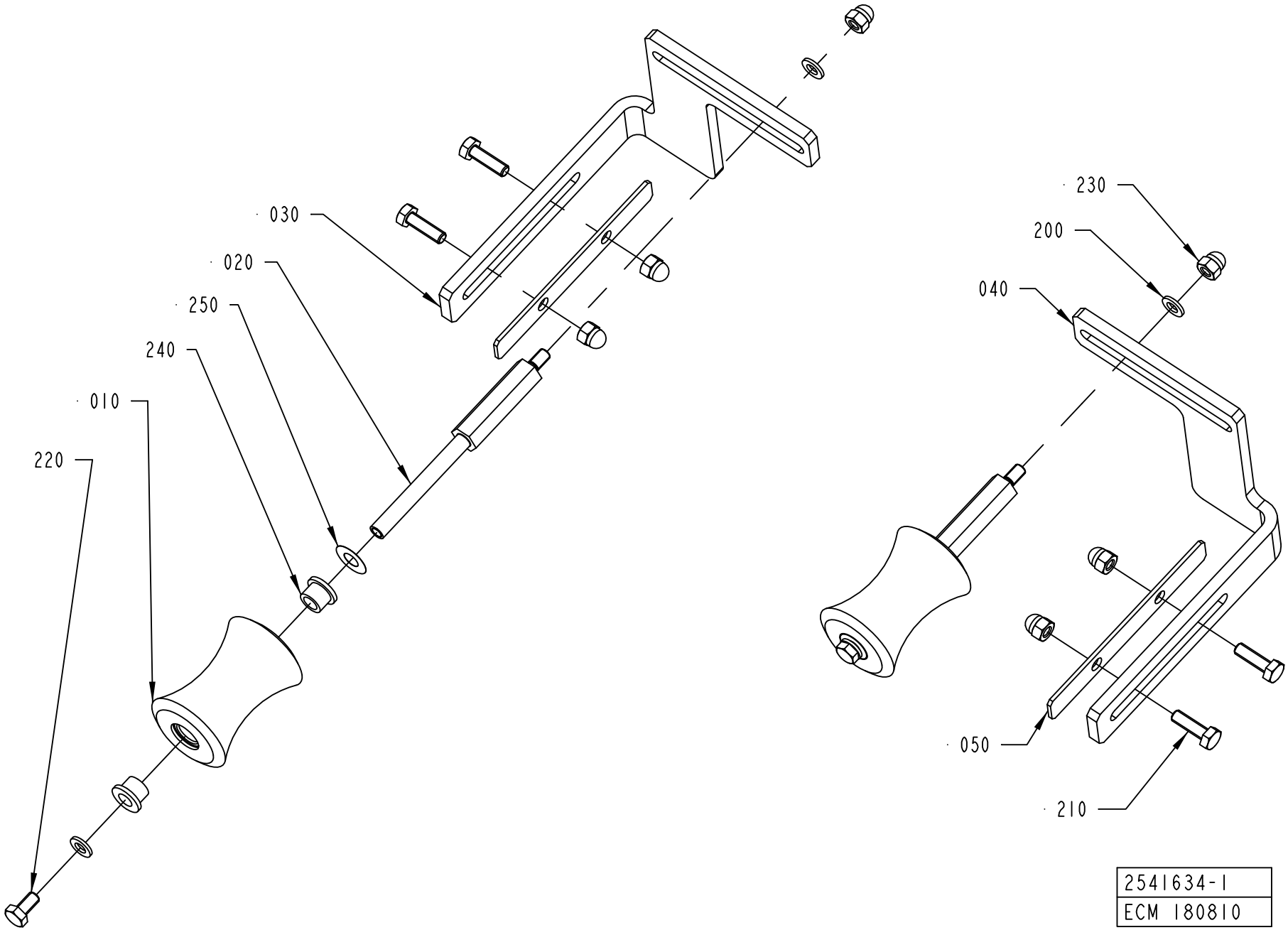
030
020
250
240
010
220
230
200
040
050
210
2541634-1
ECM 180810

Pos	Part No	UN	Qty	Description	Page No
A3/FLEX TBA 0500B, A3/FLEX TBA 1000B, A3/FLEX TBA 1000S, A3/FLEX TBA 1000SQ, A3/FLEX TBA 0200S, A3/FLEX TBA 1500S, A3/FLEX TBA 0200B, A3/FLEX TBA 0250B, A3/FLEX TBA 0330S, A3/FLEX TPA 0330SQ, A3/FLEX TPA 0500SQ, A3/FLEX TBA 0200M, A3/FLEX TBA 0250S, A3/FLEX TBA 0500S, A3/FLEX TPA 0250SQ, A3/FLEX TPA 0200SQ, A3/FLEX TBA 0200SQ, A3/FLEX TBA 0250SQ, A3/FLEX TBA 0500SQ, A3/FLEX TGA 1000SQ, A3/FLEX TGA 0500SQ, A3/FLEX TGA 0750SQ (See drawing on page: 1-70)					
010	1478359-0000		2	ROLLER	
020	1511492-0000		2	SHAFT	
030	2528112-0000		1	BRACKET	
040	2528113-0000		1	BRACKET	
050	2528114-0000		2	COVER PLATE	
200	315105-0153		4	WASHER BRB 6,4X12 RFR	
210	312105-0370		4	SCREW M6S ISO 4017 M6X20 A480	
220	312105-0366		2	SCREW M6S ISO 4017 M6X12 A480	
230	312705-0316		6	NUT HEX. DOMED CAP MHM-6 M6 A280	
240	90240-0172		4	FLANGE BUSHING, 8X12X10 MM	
A3/FLEX TBA 1890S, A3/FLEX TBA 2000S, A3/FLEX TBA 1400B (See drawing on page: 1-72)					
010	2601286-0000		2	ROLLER	
020	2634934-0000		2	SHAFT	
030	2634932-0000		1	BRACKET	
040	2634933-0000		1	BRACKET	
050	2651695-0000		2	COVER PLATE	
200	315105-0153		4	WASHER BRB 6,4X12 RFR	
210	312105-0452		4	SCREW M6S ISO 4017 M8X22 A480	
220	312105-0366		2	SCREW M6S ISO 4017 M6X12 A480	
230	312705-0316		2	NUT HEX. DOMED CAP MHM-6 M6 A280	
240	90240-0172		4	FLANGE BUSHING, 8X12X10 MM	
260	312705-0318		4	NUT HEX. DOMED CAP MHM-6 M8 A280	
A3/FLEX TPA 1000SQ, A3/FLEX TPA 0750SQ (See drawing on page: 1-70)					
010	2885029-0000		2	ROLLER	
020	1511492-0000		2	SHAFT	
030	2528112-0000		1	BRACKET	
040	2528113-0000		1	BRACKET	
050	2528114-0000		2	COVER PLATE	
200	315105-0153		4	WASHER BRB 6,4X12 RFR	
210	312105-0370		4	SCREW M6S ISO 4017 M6X20 A480	
220	312105-0366		2	SCREW M6S ISO 4017 M6X12 A480	
230	312705-0316		6	NUT HEX. DOMED CAP MHM-6 M6 A280	
240	90240-0172		4	FLANGE BUSHING, 8X12X10 MM	
Common Parts					
250	2033-0011		2	WASHER	

Pos	Part No	UN	Qty	Description	Page No

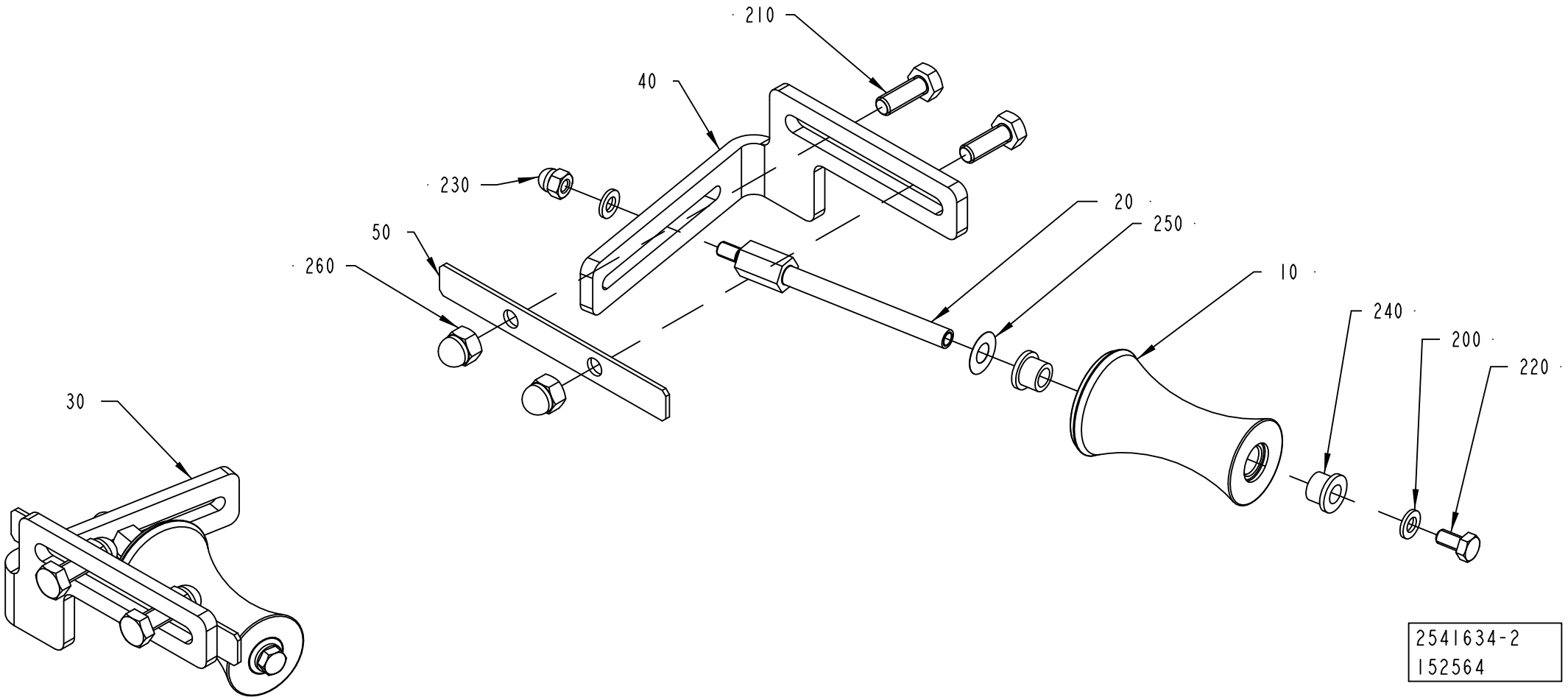
210
40
230
20
250
50
260
10
240
200
220
30
2541634-2
152564

Pos	Part No	UN	Qty	Description	Page No
A3/FLEX TBA 0500B, A3/FLEX TBA 1000B, A3/FLEX TBA 1000S, A3/FLEX TBA 1000SQ, A3/FLEX TBA 0200S, A3/FLEX TBA 1500S, A3/FLEX TBA 0200B, A3/FLEX TBA 0250B, A3/FLEX TBA 0330S, A3/FLEX TPA 0330SQ, A3/FLEX TPA 0500SQ, A3/FLEX TBA 0200M, A3/FLEX TBA 0250S, A3/FLEX TBA 0500S, A3/FLEX TPA 0250SQ, A3/FLEX TPA 0200SQ, A3/FLEX TBA 0200SQ, A3/FLEX TBA 0250SQ, A3/FLEX TBA 0500SQ, A3/FLEX TGA 1000SQ, A3/FLEX TGA 0500SQ, A3/FLEX TGA 0750SQ (See drawing on page: 1-70)					
010	1478359-0000		2	ROLLER	
020	1511492-0000		2	SHAFT	
030	2528112-0000		1	BRACKET	
040	2528113-0000		1	BRACKET	
050	2528114-0000		2	COVER PLATE	
200	315105-0153		4	WASHER BRB 6,4X12 RFR	
210	312105-0370		4	SCREW M6S ISO 4017 M6X20 A480	
220	312105-0366		2	SCREW M6S ISO 4017 M6X12 A480	
230	312705-0316		6	NUT HEX. DOMED CAP MHM-6 M6 A280	
240	90240-0172		4	FLANGE BUSHING, 8X12X10 MM	
A3/FLEX TBA 1890S, A3/FLEX TBA 2000S, A3/FLEX TBA 1400B (See drawing on page: 1-72)					
010	2601286-0000		2	ROLLER	
020	2634934-0000		2	SHAFT	
030	2634932-0000		1	BRACKET	
040	2634933-0000		1	BRACKET	
050	2651695-0000		2	COVER PLATE	
200	315105-0153		4	WASHER BRB 6,4X12 RFR	
210	312105-0452		4	SCREW M6S ISO 4017 M8X22 A480	
220	312105-0366		2	SCREW M6S ISO 4017 M6X12 A480	
230	312705-0316		2	NUT HEX. DOMED CAP MHM-6 M6 A280	
240	90240-0172		4	FLANGE BUSHING, 8X12X10 MM	
260	312705-0318		4	NUT HEX. DOMED CAP MHM-6 M8 A280	
A3/FLEX TPA 1000SQ, A3/FLEX TPA 0750SQ (See drawing on page: 1-70)					
010	2885029-0000		2	ROLLER	
020	1511492-0000		2	SHAFT	
030	2528112-0000		1	BRACKET	
040	2528113-0000		1	BRACKET	
050	2528114-0000		2	COVER PLATE	
200	315105-0153		4	WASHER BRB 6,4X12 RFR	
210	312105-0370		4	SCREW M6S ISO 4017 M6X20 A480	
220	312105-0366		2	SCREW M6S ISO 4017 M6X12 A480	
230	312705-0316		6	NUT HEX. DOMED CAP MHM-6 M6 A280	
240	90240-0172		4	FLANGE BUSHING, 8X12X10 MM	
Common Parts					
250	2033-0011		2	WASHER	

Pos	Part No	UN	Qty	Description	Page No

LOWER FORMING RING

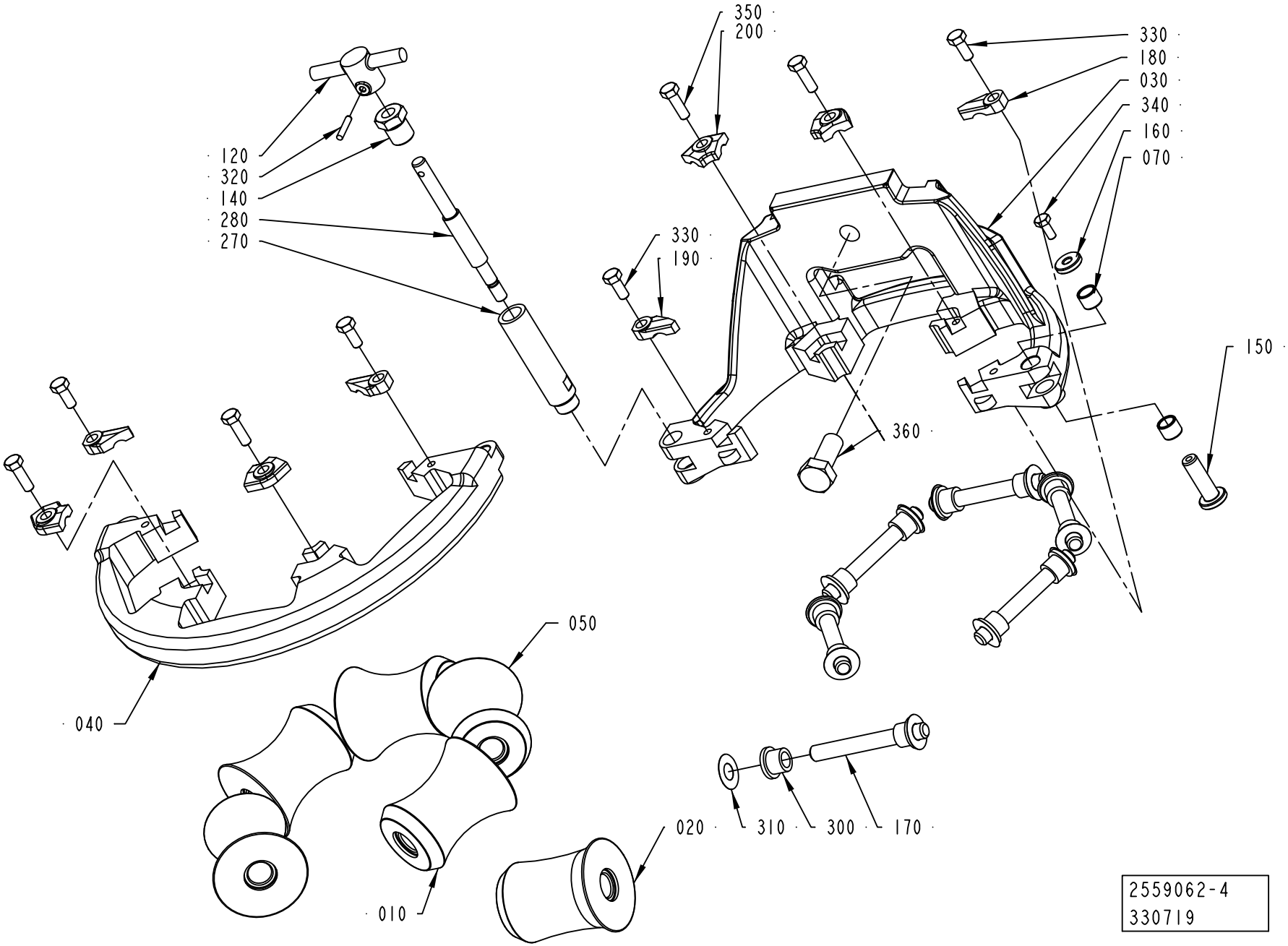

Pos	Part No	UN	Qty	Description	Page No
TBA 0200B, TBA 0250B, TBA 0330S (See drawing on page: 1-80)					
010	751502-0000		5	ROLLER	
	Remark : PLUS ROLLER 3-752462				
	MINUS ROLLER 3-752463				
020	2544882-0000		1	COUNTER ROLLER	
030	2764024-0000		1	LOWER FORMING RING	
040	2736630-0000		1	LOWER FORMING RING	
170	752186-0005		6	SHAFT	
180	2528119-0005		2	LOCK PLATE	
190	2528118-0005		2	LOCK PLATE	
200	2528123-0004		4	LOCK PLATE	
TBA 0200M, TBA 0250S (See drawing on page: 1-80)					
010	2601308-0000		5	ROLLER	
	Remark : PLUS ROLLER 2641280-0002				
	MINUS ROLLER 2641280-0001				
020	2601309-0000		1	ROLLER	
030	2764030-0000		1	LOWER FORMING RING	
040	2736629-0000		1	LOWER FORMING RING	
170	752186-0004		6	SHAFT	
180	2528119-0003		2	LOCK PLATE	
190	2528118-0003		2	LOCK PLATE	
200	2528123-0002		4	LOCK PLATE	
TBA 0200S, TPA 0250SQ, TPA 0200SQ (See drawing on page: 1-80)					
010	2565424-0000		5	ROLLER	
	Remark : PLUS ROLLER 2641278-0002				
	MINUS ROLLER 2641278-0001				
020	2565425-0000		1	COUNTER ROLLER	
030	2764028-0000		1	LOWER FORMING RING	
040	2736628-0000		1	LOWER FORMING RING	
170	752186-0004		6	SHAFT	
180	2528119-0005		2	LOCK PLATE	
190	2528118-0005		2	LOCK PLATE	
200	2528123-0004		4	LOCK PLATE	
TBA 0200SQ, TBA 0250SQ (See drawing on page: 1-80)					
010	751502-0000		5	ROLLER	
	Remark : PLUS ROLLER 3-752462				
	MINUS ROLLER 3-752463				
020	2720846-0000		1	COUNTER ROLLER	
030	2764024-0000		1	LOWER FORMING RING	
040	2736630-0000		1	LOWER FORMING RING	
170	752186-0005		6	SHAFT	
180	2528119-0005		2	LOCK PLATE	
190	2528118-0005		2	LOCK PLATE	
200	2528123-0004		4	LOCK PLATE	
TBA 0500B, TBA 1000B (See drawing on page: 1-74)					
010	1349851-0000		3	ROLL	
	Remark : PLUS ROLLER 1349853-0000				
	MINUS ROLLER 1349852-0000				
020	2876664-0000		1	COUNTER ROLLER	
030	2764026-0000		1	LOWER FORMING RING	
040	2700546-0000		1	FRONT RING	
050	1349853-0000		2	ROLL	
	Remark : PLUS ROLLER 2931183-0000				
	MINUS ROLLER 1349851-0000				
170	752186-0014		6	SHAFT	
180	2528119-0004		2	LOCK PLATE	
190	2528118-0004		2	LOCK PLATE	
200	2528123-0004		4	LOCK PLATE	
TBA 0500S (See drawing on page: 1-80)					
010	1499636-0000		5	ROLLER	
	Remark : PLUS ROLLER 1538616-0000				
	MINUS ROLLER 1538617-0000				
020	2709785-0000		1	ROLLER	
030	2764025-0000		1	LOWER FORMING RING	
040	2731503-0000		1	LOWER FORMING RING	
170	2522213-0006		6	SHAFT	
180	2528119-0005		2	LOCK PLATE	
190	2528118-0005		2	LOCK PLATE	
200	2528123-0004		4	LOCK PLATE	
TBA 0500SQ, TBA 1000SQ (See drawing on page: 1-80)					
010	1490765-0000		5	ROLLER	
	Remark : PLUS ROLLER 1490767-0000				
	MINUS ROLLER 1490763				
020	1499411-0000		1	COUNTER ROLLER	
030	2764023-0000		1	LOWER FORMING RING	
040	2736705-0000		1	LOWER FORMING RING	
170	752186-0016		6	SHAFT	
180	2528119-0004		2	LOCK PLATE	
190	2528118-0004		2	LOCK PLATE	
200	2528123-0004		4	LOCK PLATE	
TBA 1000S (See drawing on page: 1-80)					
010	567746-0001		5	ROLLER (STANDARD SIZE)	
	Remark : PLUS ROLLER 3-567746-2				
	MINUS ROLLER 3-567746-3				

LOWER FORMING RING

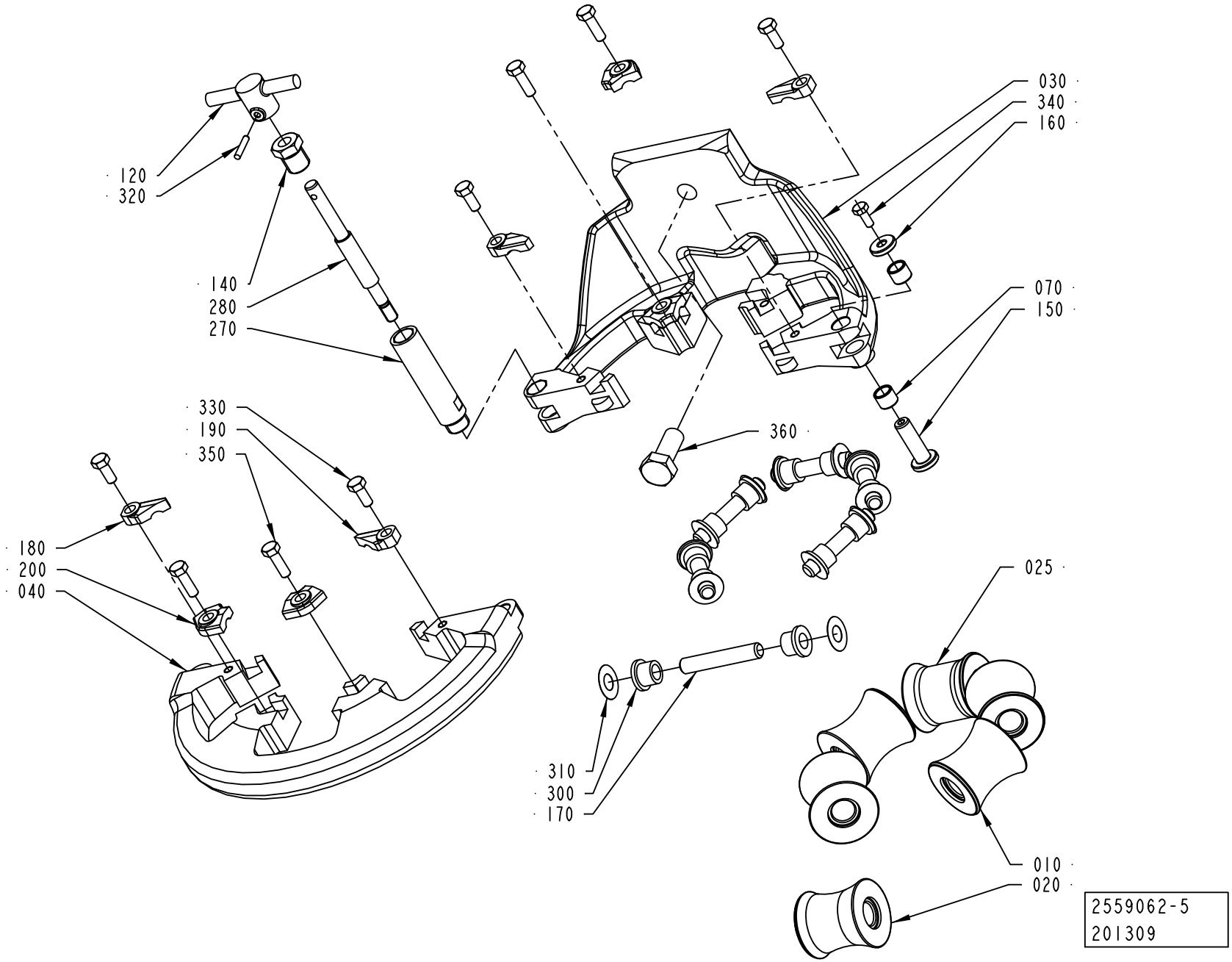

Pos	Part No	UN	Qty	Description	Page No
TBA 1000S (Cont'd) (See drawing on page: 1-80)					
020	1334856-0000		1	COUNTER ROLLER	
030	2764027-0000		1	LOWER FORMING RING	
040	2721423-0000		1	FORMING RING	
170	752186-0016		6	SHAFT	
180	2528119-0005		2	LOCK PLATE	
190	2528118-0005		2	LOCK PLATE	
200	2528123-0004		4	LOCK PLATE	
TBA 1500S (See drawing on page: 1-80)					
010	1349851-0000		5	ROLL	
	Remark : PLUS ROLLER 1349853-0000				
	MINUS ROLLER 1349852-0000				
020	2518098-0000		1	COUNTER ROLLER	
030	2764026-0000		1	LOWER FORMING RING	
040	2700546-0000		1	FRONT RING	
170	752186-0014		6	SHAFT	
180	2528119-0004		2	LOCK PLATE	
190	2528118-0004		2	LOCK PLATE	
200	2528123-0004		4	LOCK PLATE	
TBA 1890S, TBA 2000S, TBA 1400B (See drawing on page: 1-78)					
010	2565513-0000		5	ROLLER	
	Remark : PLUS ROLLER 2601311-0000				
	MINUS ROLLER 2601310-0000				
020	2657923-0000		1	COUNTER ROLLER	
030	2764029-0000		1	LOWER FORMING RING	
040	2673023-0000		1	LOWER FORMING RING	
170	752186-0015		6	SHAFT	
180	2528119-0004		2	LOCK PLATE	
190	2528118-0004		2	LOCK PLATE	
200	2528123-0004		4	LOCK PLATE	
TGA 1000SQ, TGA 0750SQ, TGA 0500SQ (See drawing on page: 1-84)					
010	2611069-0001		5	ROLLER	
020	2611070-0000		1	COUNTER ROLLER	
030	2764025-0000		1	LOWER FORMING RING	
040	2731503-0000		1	LOWER FORMING RING	
170	2522213-0006		6	SHAFT	
180	2528119-0005		2	LOCK PLATE	
190	2528118-0005		2	LOCK PLATE	
200	2528123-0004		4	LOCK PLATE	
TPA 0330SQ (See drawing on page: 1-80)					
010	2594644-0000		5	ROLLER	
	Remark : PLUS ROLLER 2611279-0001				
	MINUS ROLLER 2611279-0002				
020	2641282-0000		1	COUNTER ROLLER	
030	2764024-0000		1	LOWER FORMING RING	
040	2736630-0000		1	LOWER FORMING RING	
170	752186-0005		6	SHAFT	
180	2528119-0005		2	LOCK PLATE	
190	2528118-0005		2	LOCK PLATE	
200	2528123-0004		4	LOCK PLATE	
TPA 0500SQ (See drawing on page: 1-76)					
010	2601328-0000		4	ROLLER	
	Remark : PLUS ROLLER 2641281-0002				
	MINUS ROLLER 2641281-0001				
020	2686861-0000		1	ROLLER	
025	2601327-0000		1	ROLLER	
030	2764031-0000		1	LOWER FORMING RING	
040	2731506-0000		1	LOWER FORMING RING	
170	752186-0005		6	SHAFT	
180	2528119-0004		2	LOCK PLATE	
190	2528118-0004		2	LOCK PLATE	
200	2528123-0003		4	LOCK PLATE	
TPA 1000SQ, TPA 0750SQ (See drawing on page: 1-82)					
010	1524156-0000		2	ROLLER	
020	1524547-0000		1	COUNTER ROLLER	
025	2833215-0000		1	ROLLER	
030	2764025-0000		1	LOWER FORMING RING	
040	2731503-0000		1	LOWER FORMING RING	
050	2833085-0000		1	ROLLER	
	Remark : PLUS ROLLER 2909848				
	MINUS ROLLER 2909846				
060	2833086-0000		1	ROLLER	
	Remark : PLUS ROLLER 2909849				
	MINUS ROLLER 2909847				
170	2522213-0006		6	SHAFT	
180	2528119-0005		2	LOCK PLATE	
190	2528118-0005		2	LOCK PLATE	
200	2528123-0004		4	LOCK PLATE	
Common Parts					
070	2526826-0000		2	BUSHING	
120	2764036-0000		1	KNOB	
140	2731428-0000		1	NUT	
150	2526827-0000		1	SHAFT	
160	2526825-0000		1	WASHER	

Machine Type | Group Description | Used-In | Group Number | Page No

LOWER FORMING RING

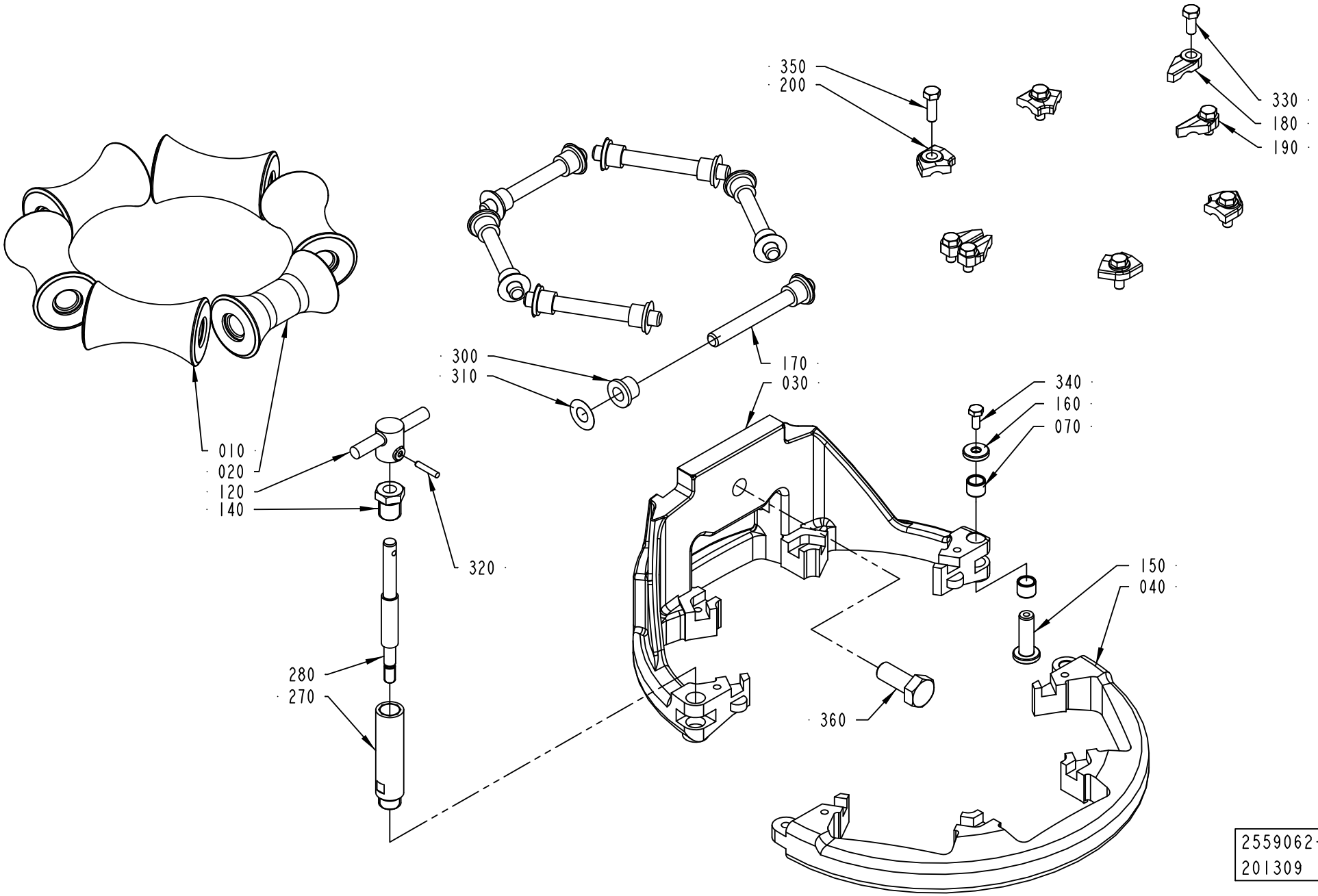

Pos	Part No	UN	Qty	Description	Page No
Common Parts (Cont'd)					
270	2764032-0000		1	SHAFT	
280	2764033-0000		1	SHAFT	
300	90240-0172		12	FLANGE BUSHING, 8X12X10 MM	
310	2033-0011		12	WASHER	
320	311103-0236		1	PARALLEL PIN ISO 2338 3M6X16 A1	
330	312105-0327		4	SCREW M6S ISO 4017 M5X12 A480	
340	312105-0289		1	SCREW M6S H4X10 A4 70 ISO4017/DIN933	
350	312105-0329		4	SCREW M6S ISO 4017 M5X16 A480	
360	312105-0493		1	SCREW M6S ISO 4017 M10X25 A480	

Pos	Part No	UN	Qty	Description	Page No

LOWER FORMING RING

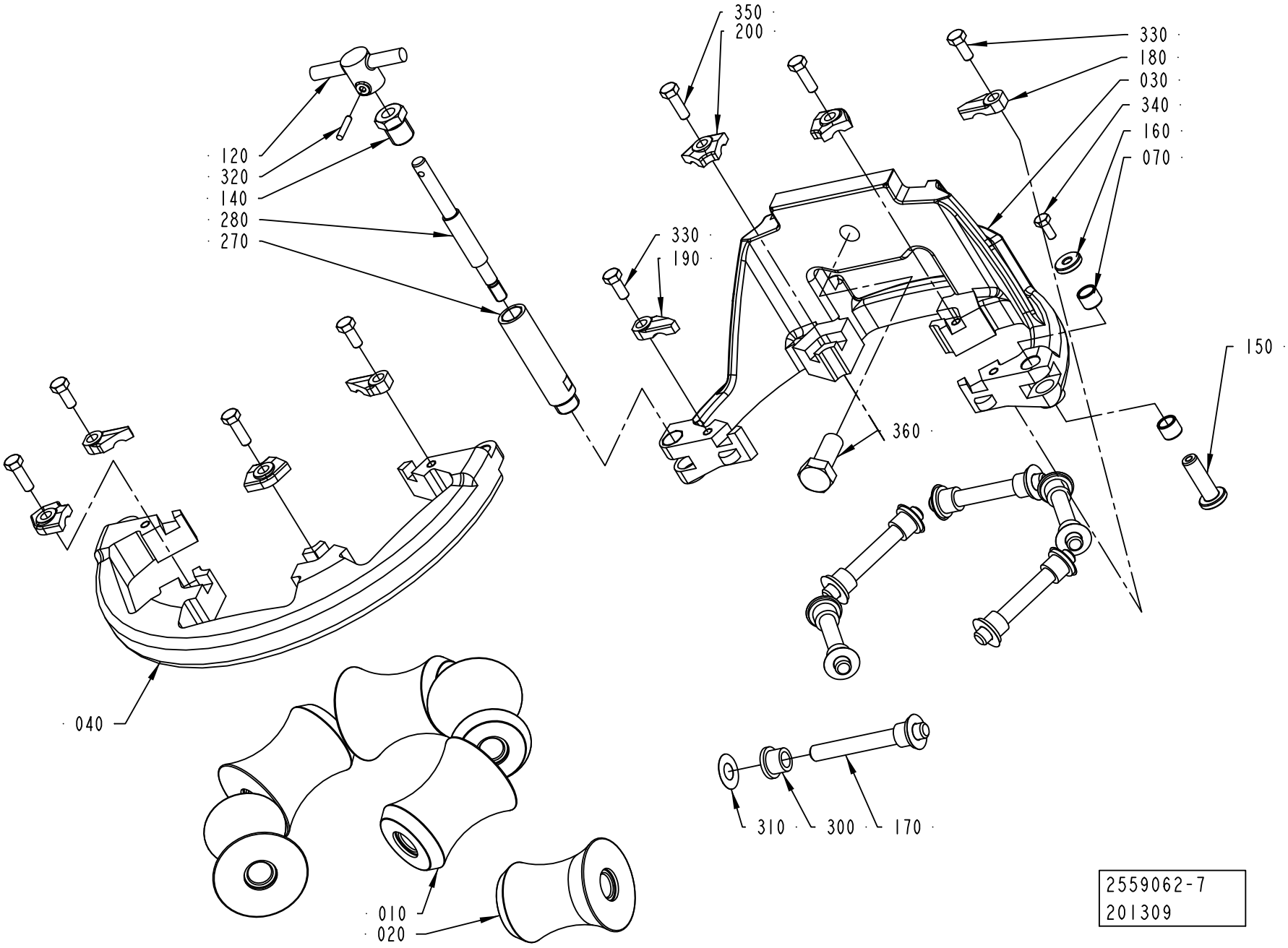

ECM: 363413 - 20091001
Group number: 2559062-0200
Assembly Drawing: 2559062-7_1_AA

This list covers pages from 1-74 to 1-85

Pos	Part No	UN	Qty	Description	Page No
SEE PREVIOUS LISTS PAGES: 1-75, 1-77, 1-79.					

Pos	Part No	UN	Qty	Description	Page No

LOWER FORMING RING

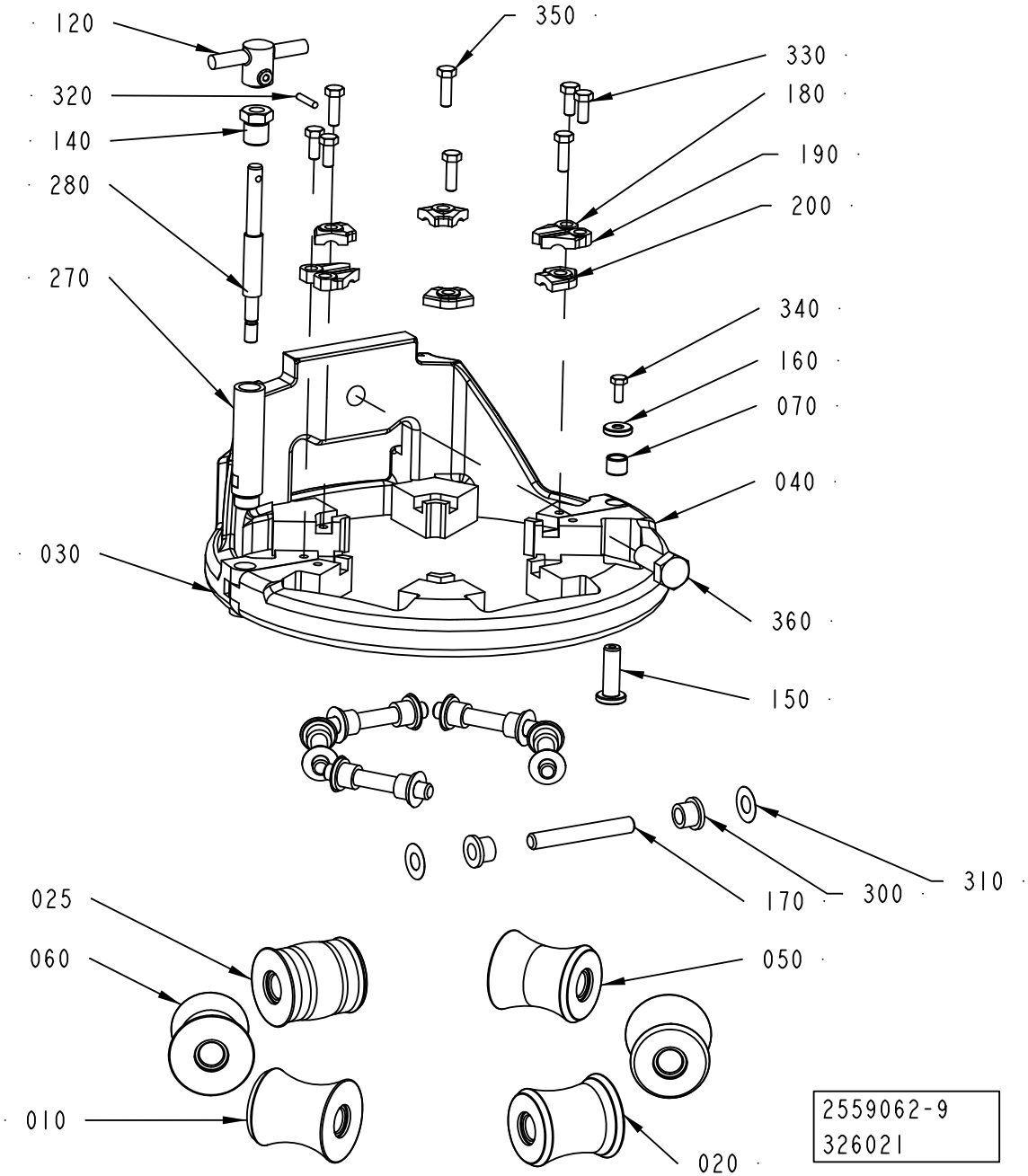

ECM: 363413 - 20091001
Group number: 2559062-0200
Assembly Drawing: 2559062-9_1_AA

This list covers pages from 1-74 to 1-85

Pos	Part No	UN	Qty	Description	Page No
SEE PREVIOUS LISTS PAGES: 1-75, 1-77, 1-79.					

Pos	Part No	UN	Qty	Description	Page No

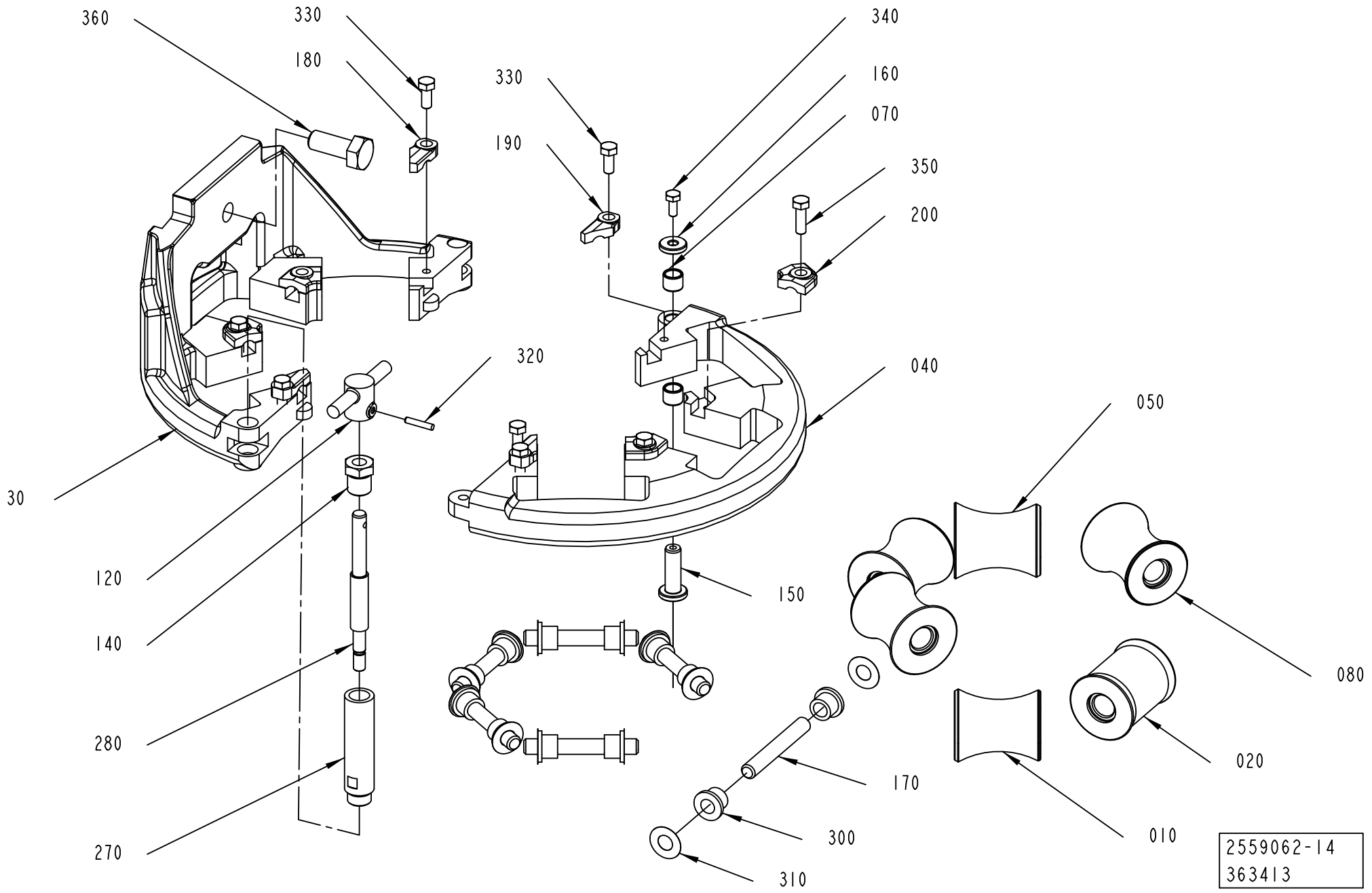
360
330
180
330
190
340
160
070
350
200
320
040
050
30
120
140
280
270
150
080
020
170
300
310
010
2559062-14
363413

ECM: 363413 - 20091001
Group number: 2559062-0200
Assembly Drawing: 2559062-14_1_AA

This list covers pages from 1-74 to 1-85

Pos	Part No	UN	Qty	Description	Page No
SEE PREVIOUS LISTS PAGES: 1-75, 1-77, 1-79.					

Pos	Part No	UN	Qty	Description	Page No

UPPER FORMING RING

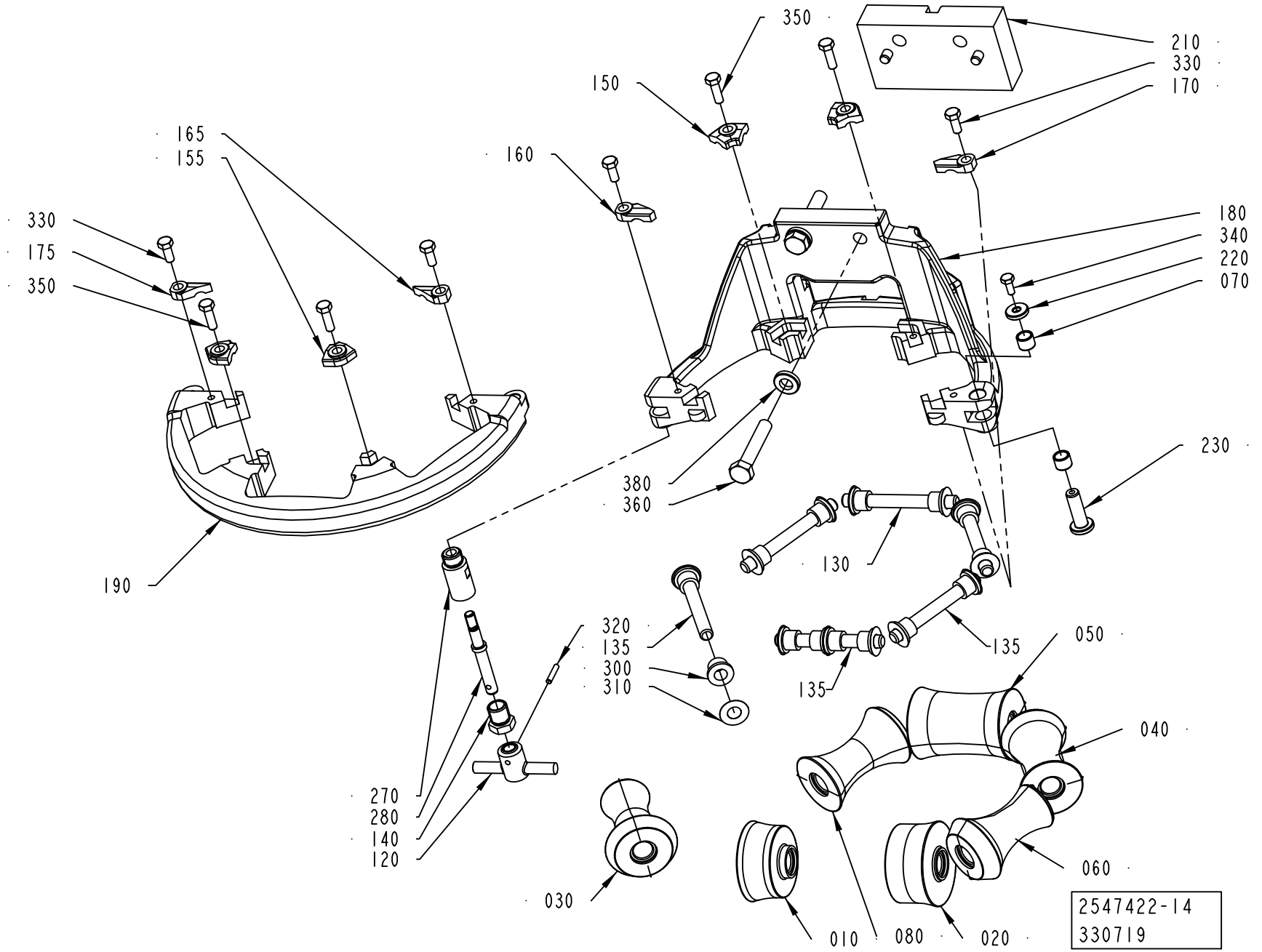

ECM: 375730 - 20090101
Group number: 2547422-0200
Assembly Drawing: 2547422-14_1_AA

This list covers pages from 1-86 to 1-103

Pos	Part No	UN	Qty	Description	Page No
A3/FLEX TBA 0500B, A3/FLEX TBA 1000B (See drawing on page: 1-86)					
010	2895460-0000		1	ROLLER	
020	2895463-0000		1	ROLLER	
030	2895459-0000		1	ROLLER	
040	2895461-0000		1	ROLLER	
050	2895457-0000		1	ROLLER	
060	2895462-0000		1	ROLLER	
080	2895458-0000		1	ROLLER	
130	752186-0015		3	SHAFT	
135	752186-0007		3	SHAFT	
150	2528123-0004		2	LOCK PLATE	
155	2528123-0008		2	LOCK PLATE	
160	2528118-0005		1	LOCK PLATE	
165	2528118-0001		1	LOCK PLATE	
170	2528119-0005		1	LOCK PLATE	
175	2528119-0001		1	LOCK PLATE	
180	2764022-0000		1	UPPER FORMING RING	
190	2736677-0000		1	UPPER FORMING RING	
210	2696412-0000		1	SPACER	
300	90240-0172		14	FLANGE BUSHING, 8X12X10 MM	
360	312109-0460		2	SCREW M6S ISO 4017 M8X45 A480	
380	315115-0165		2	WASHER PLAIN, TBRB 8,4/16 H=3	
TBA 0200B, TBA 0250B, TBA 0330S (See drawing on page: 1-88)					
010	2641285-0000		1	ROLLER	
020	2641286-0000		1	ROLLER	
030	2641287-0000		1	ROLLER	
040	2641288-0000		2	ROLLER	
050	2641289-0000		1	ROLLER	
060	2641290-0000		1	ROLLER	
130	2522213-0015		6	SHAFT	
150	2528123-0003		4	LOCK PLATE	
160	2528118-0003		2	LOCK PLATE	
170	2528119-0003		2	LOCK PLATE	
180	2764020-0000		1	UPPER FORMING RING	
190	2736636-0000		1	UPPER FORMING RING	
210	2634987-0000		1	SPACER	
300	90240-0172		10	FLANGE BUSHING, 8X12X10 MM	
360	312105-0451		2	SCREW M6S ISO 4017 M8X20 A480	
370	752156-0000		4	FLANGE BUSHING	
400	312115-0451		2	SCREW ISO4762 M8X20 A4 80	
TBA 0200M, TBA 0250S (See drawing on page: 1-88)					
010	2634988-0000		1	ROLLER	
020	2634989-0000		1	ROLLER	
030	2611012-0000		1	ROLLER	
040	2601334-0000		2	ROLLER	
050	2601333-0000		1	ROLLER	
060	2634990-0000		1	ROLLER	
130	2522213-0004		6	SHAFT	
150	2528123-0001		4	LOCK PLATE	
160	2528118-0002		2	LOCK PLATE	
170	2528119-0002		2	LOCK PLATE	
180	2764016-0000		1	UPPER FORMING RING	
190	2736635-0000		1	UPPER FORMING RING	
210	2634987-0000		1	SPACER	
300	90240-0172		10	FLANGE BUSHING, 8X12X10 MM	
360	312105-0451		2	SCREW M6S ISO 4017 M8X20 A480	
370	752156-0000		4	FLANGE BUSHING	
400	312115-0451		2	SCREW ISO4762 M8X20 A4 80	
TBA 0200S, TPA 0250SQ, TPA 0200SQ (See drawing on page: 1-88)					
010	2634984-0000		1	ROLLER	
020	2634985-0000		1	ROLLER	
030	2634949-0000		1	ROLLER	
040	2634948-0000		2	ROLLER	
050	2634947-0000		1	ROLLER	
060	2634983-0000		1	ROLLER	
130	2522213-0004		6	SHAFT	
150	2528123-0001		4	LOCK PLATE	
160	2528118-0002		2	LOCK PLATE	
170	2528119-0002		2	LOCK PLATE	
180	2764018-0000		1	UPPER FORMING RING	
190	2736634-0000		1	UPPER FORMING RING	
210	2634987-0000		1	SPACER	
300	90240-0172		10	FLANGE BUSHING, 8X12X10 MM	
360	312105-0451		2	SCREW M6S ISO 4017 M8X20 A480	
370	752156-0000		4	FLANGE BUSHING	
400	312115-0451		2	SCREW ISO4762 M8X20 A4 80	
TBA 0200SQ, TBA 0250SQ (See drawing on page: 1-88)					
010	2759322-0000		1	ROLLER	
020	2759323-0000		1	ROLLER	
030	2641287-0000		1	ROLLER	
040	2641288-0000		2	ROLLER	
050	2641289-0000		1	ROLLER	
060	2641290-0000		1	ROLLER	
130	2522213-0015		6	SHAFT	

Machine Type | Group Description | Used-In | Group Number | Page No

UPPER FORMING RING

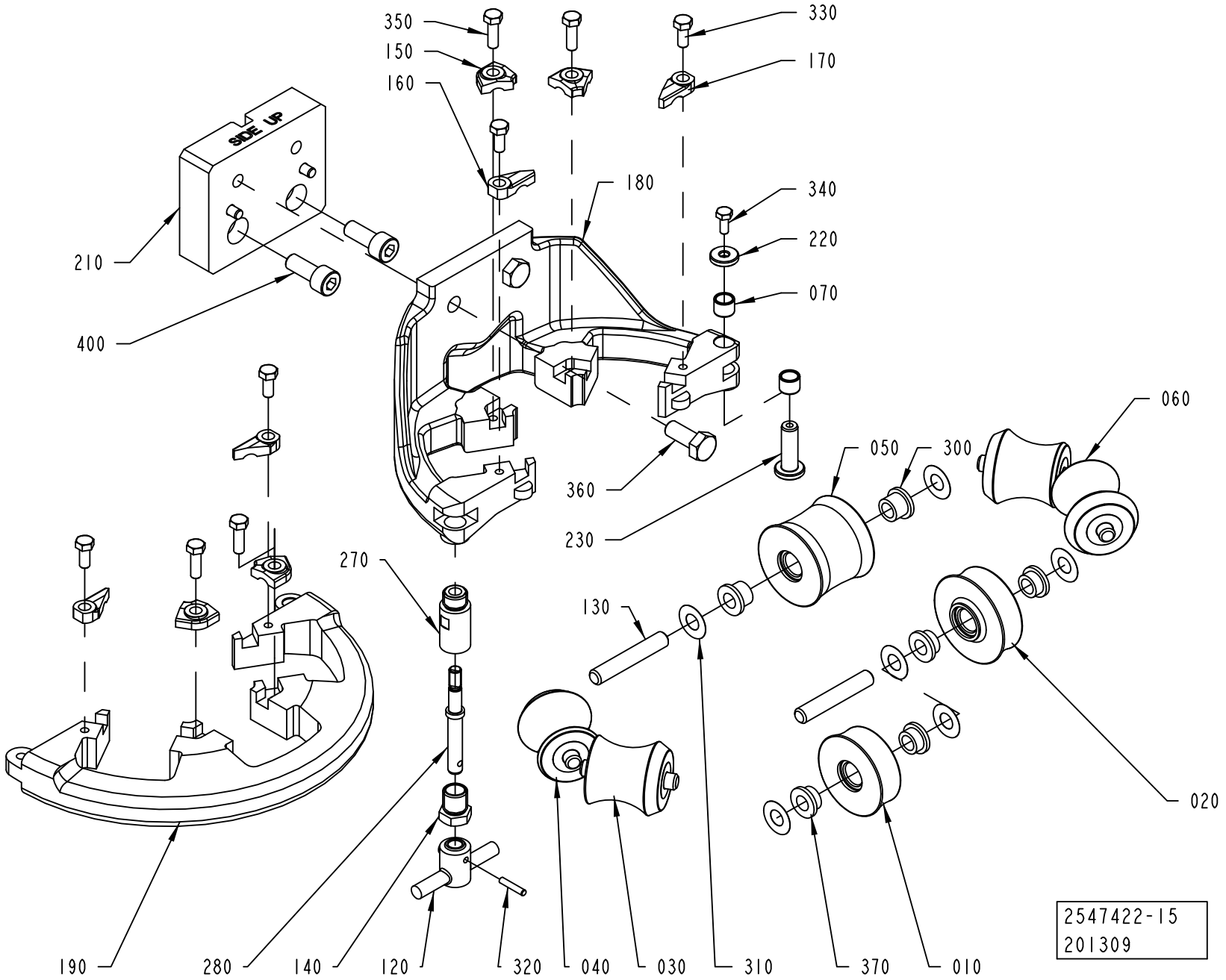

Pos	Part No	UN	Qty	Description	Page No
TBA 0200SQ, TBA 0250SQ (Cont'd) (See drawing on page: 1-88)					
150	2528123-0003		4	LOCK PLATE	
160	2528118-0003		2	LOCK PLATE	
170	2528119-0003		2	LOCK PLATE	
180	2764020-0000		1	UPPER FORMING RING	
190	2736636-0000		1	UPPER FORMING RING	
210	2634987-0000		1	SPACER	
300	90240-0172		10	FLANGE BUSHING, 8X12X10 MM	
360	312105-0451		2	SCREW M6S ISO 4017 M8X20 A480	
370	752156-0000		4	FLANGE BUSHING	
400	312115-0451		2	SCREW ISO4762 M8X20 A4 80	
TBA 0500S (See drawing on page: 1-100)					
010	2611020-0000		1	ROLLER	
020	2720717-0000		1	ROLLER	
030	2672980-0000		1	ROLLER	
040	2672979-0000		2	ROLLER	
050	2672978-0000		1	ROLLER	
060	2672981-0000		1	ROLLER	
130	2522213-0007		6	SHAFT	
150	2528123-0005		4	LOCK PLATE	
160	2528118-0005		2	LOCK PLATE	
170	2528119-0005		2	LOCK PLATE	
180	2764021-0000		1	UPPER FORMING RING	
190	2736631-0000		1	UPPER FORMING RING	
210	2532914-0000		1	SPACER	
300	90240-0172		14	FLANGE BUSHING, 8X12X10 MM	
360	312109-0459		2	SCREW M6S ISO 4017 M8X40 A480	
TBA 0500SQ, TBA 1000SQ (See drawing on page: 1-96)					
010	2532965-0000		1	ROLLER	
020	1548541-0000		1	ROLLER	
030	1548531-0000		4	ROLLER	
060	1548540-0000		1	ROLLER	
130	752186-0007		6	SHAFT	
150	2528123-0004		4	LOCK PLATE	
160	2528118-0004		2	LOCK PLATE	
170	2528119-0004		2	LOCK PLATE	
180	2764013-0000		1	UPPER FORMING RING	
190	2736697-0000		1	UPPER FORMING RING	
210	2532914-0000		1	SPACER	
300	90240-0172		14	FLANGE BUSHING, 8X12X10 MM	
360	312109-0459		2	SCREW M6S ISO 4017 M8X40 A480	
TBA 1000S (See drawing on page: 1-98)					
010	2512737-0000		1	ROLLER	
020	2512738-0000		1	ROLLER	
030	2512740-0000		1	ROLLER	
040	2512741-0000		2	ROLLER	
050	2512742-0000		2	ROLLER	
130	752186-0007		6	SHAFT	
150	2528123-0001		4	LOCK PLATE	
160	2528118-0001		2	LOCK PLATE	
170	2528119-0001		2	LOCK PLATE	
180	2764014-0000		1	UPPER FORMING RING	
190	2736676-0000		1	UPPER FORMING RING	
210	2532914-0000		1	SPACER	
300	90240-0172		14	FLANGE BUSHING, 8X12X10 MM	
360	312109-0459		2	SCREW M6S ISO 4017 M8X40 A480	
TBA 1500S (See drawing on page: 1-102)					
010	2751479-0000		1	ROLLER	
020	2751478-0000		1	ROLLER	
030	2751483-0000		1	ROLLER	
040	2751481-0000		2	ROLLER	
050	2751480-0000		1	ROLLER	
060	2751482-0000		1	ROLLER	
130	752186-0015		3	SHAFT	
135	752186-0007		3	SHAFT	
150	2528123-0004		2	LOCK PLATE	
155	2528123-0008		2	LOCK PLATE	
160	2528118-0005		1	LOCK PLATE	
165	2528118-0001		1	LOCK PLATE	
170	2528119-0005		1	LOCK PLATE	
175	2528119-0001		1	LOCK PLATE	
180	2764022-0000		1	UPPER FORMING RING	
190	2736677-0000		1	UPPER FORMING RING	
210	2696412-0000		1	SPACER	
300	90240-0172		14	FLANGE BUSHING, 8X12X10 MM	
360	312109-0460		2	SCREW M6S ISO 4017 M8X45 A480	
380	315115-0165		2	WASHER PLAIN, TBRB 8,4/16 H=3	
TBA 1890S, TBA 2000S, TBA 1400B (See drawing on page: 1-94)					
010	2634958-0000		1	ROLLER	
020	2634957-0000		1	ROLLER	
030	2634956-0000		1	ROLLER	
040	2634954-0000		2	ROLLER	
050	2634953-0000		1	ROLLER	
060	2634955-0000		1	ROLLER	

UPPER FORMING RING

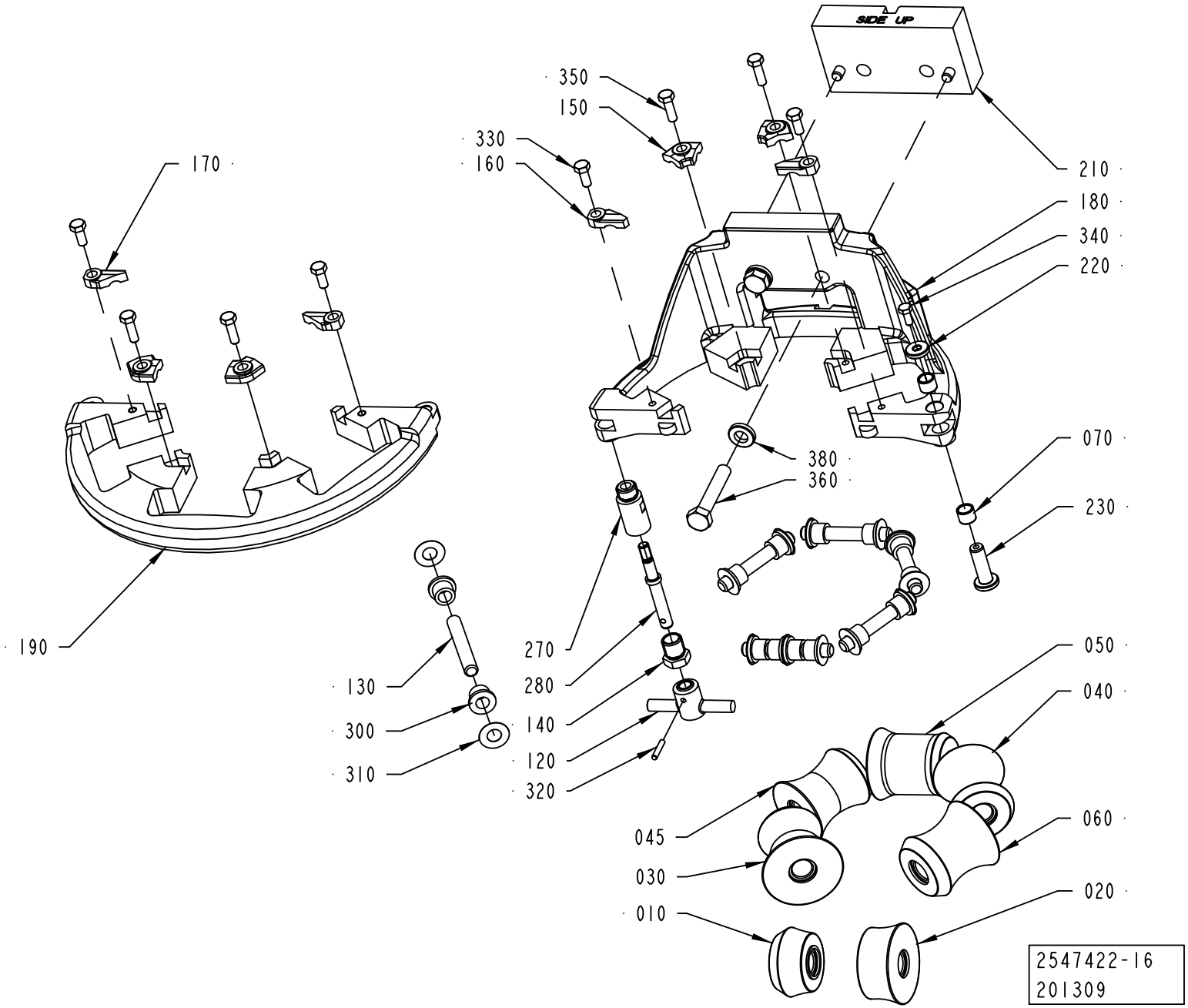

ECM: 375730 - 20090101
Group number: 2547422-0200
Assembly Drawing: 2547422-16_1_AA

This list covers pages from 1-86 to 1-103

Pos	Part No	UN	Qty	Description	Page No
TBA 1890S, TBA 2000S, TBA 1400B (Cont'd) (See drawing on page: 1-94)					
130	752186-0015		6	SHAFT	
150	2528123-0002		4	LOCK PLATE	
160	2528118-0003		2	LOCK PLATE	
170	2528119-0003		2	LOCK PLATE	
180	2764019-0000		1	UPPER FORMING RING	
190	2736633-0000		1	UPPER FORMING RING	
210	2946883-0000		1	SPACER	
300	90240-0172		14	FLANGE BUSHING, 8X12X10 MM	
360	312109-0459		2	SCREW M6S ISO 4017 M8X40 A480	
380	315105-0165		2	WASHER BRB 8,4X16 RFR	
TGA 1000SQ, TGA 0750SQ, TGA 0500SQ (See drawing on page: 1-92)					
010	2611067-0000		1	ROLLER	
020	2611068-0000		1	ROLLER	
040	2611065-0001		2	ROLLER	
050	2611064-0001		1	ROLLER	
060	2611066-0000		2	ROLLER	
130	2522213-0007		6	SHAFT	
150	2528123-0005		4	LOCK PLATE	
160	2528118-0005		2	LOCK PLATE	
170	2528119-0005		2	LOCK PLATE	
180	2793351-0000		1	UPPER FORMING RING	
190	2736631-0000		1	UPPER FORMING RING	
210	2532914-0000		1	SPACER	
300	90240-0172		14	FLANGE BUSHING, 8X12X10 MM	
360	312109-0459		2	SCREW M6S ISO 4017 M8X40 A480	
TPA 0330SQ (See drawing on page: 1-88)					
010	2672950-0000		1	ROLLER	
020	2672951-0000		1	ROLLER	
030	2672955-0000		1	ROLLER	
040	2672953-0000		2	ROLLER	
050	2672954-0000		1	ROLLER	
060	2672952-0000		1	ROLLER	
130	2522213-0015		6	SHAFT	
150	2528123-0003		4	LOCK PLATE	
160	2528118-0003		2	LOCK PLATE	
170	2528119-0003		2	LOCK PLATE	
180	2764020-0000		1	UPPER FORMING RING	
190	2736636-0000		1	UPPER FORMING RING	
210	2689172-0000		1	SPACER	
300	90240-0172		10	FLANGE BUSHING, 8X12X10 MM	
360	312105-0451		2	SCREW M6S ISO 4017 M8X20 A480	
370	752156-0000		4	FLANGE BUSHING	
400	312115-0451		2	SCREW ISO4762 M8X20 A4 80	
TPA 0500SQ (See drawing on page: 1-90)					
010	2680198-0000		1	ROLLER	
020	2680201-0000		1	ROLLER	
030	2680197-0000		1	ROLLER	
040	2611016-0000		1	ROLLER	
045	2680196-0000		1	ROLLER	
050	2680195-0000		1	ROLLER	
060	2611017-0000		1	ROLLER	
130	752186-0006		6	SHAFT	
150	2528123-0003		4	LOCK PLATE	
160	2528118-0004		2	LOCK PLATE	
170	2528119-0004		2	LOCK PLATE	
180	2764017-0000		1	UPPER FORMING RING	
190	2736632-0000		1	UPPER FORMING RING	
210	2611024-0000		1	SPACER	
300	90240-0172		14	FLANGE BUSHING, 8X12X10 MM	
360	312109-0460		2	SCREW M6S ISO 4017 M8X45 A480	
380	315115-0165		2	WASHER PLAIN, TBRB 8,4/16 H=3	
TPA 1000SQ, TPA 0750SQ (See drawing on page: 1-92)					
010	2851583-0000		1	ROLLER	
020	2851586-0000		1	ROLLER	
030	1524151-0000		2	ROLLER	
040	2833088-0000		2	ROLLER	
050	2833212-0000		1	ROLLER	
130	2522213-0007		6	SHAFT	
150	2528123-0005		4	LOCK PLATE	
160	2528118-0005		2	LOCK PLATE	
170	2528119-0005		2	LOCK PLATE	
180	2764015-0000		1	UPPER FORMING RING	
190	2736631-0000		1	UPPER FORMING RING	
210	2696411-0000		1	SPACER	
300	90240-0172		14	FLANGE BUSHING, 8X12X10 MM	
360	312109-0459		2	SCREW M6S ISO 4017 M8X40 A480	
Common Parts					
070	2526826-0000		2	BUSHING	
120	2764036-0000		1	KNOB	
140	2731428-0000		1	NUT	
220	2526825-0000		1	WASHER	
230	2526827-0000		1	SHAFT	
270	2764034-0000		1	SHAFT	

Machine Type | Group Description | Used-In | Group Number | Page No

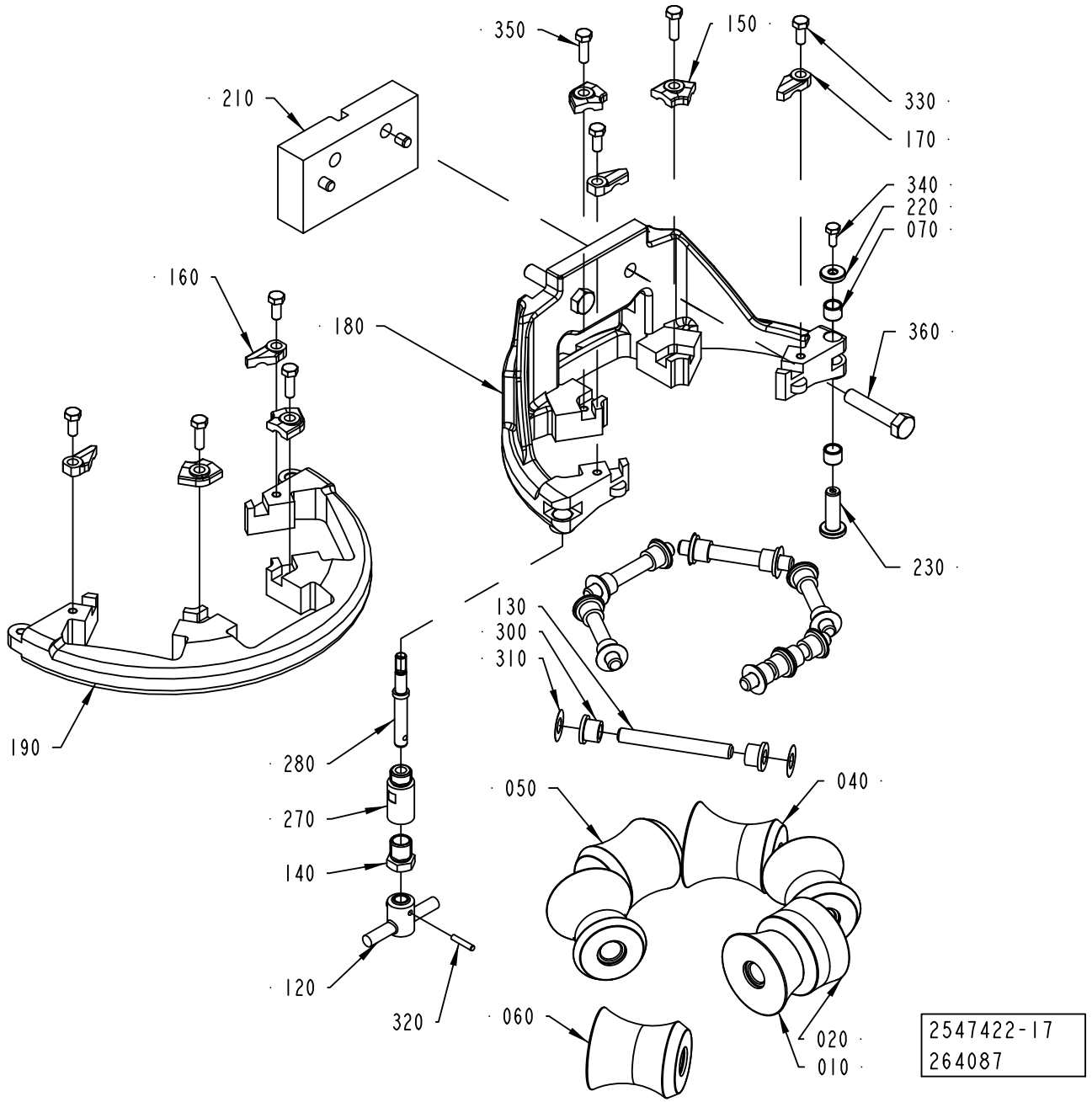
350
150
210
330
170
340
220
070
160
180
360
230
130
300
310
190
280
270
140
120
320
050
040
060
020
010
2547422-17
264087

Pos	Part No	UN	Qty	Description	Page No
Common Parts (Cont'd)					
280	2764035-0000		1	SHAFT	
310	2033-0011		14	WASHER	
320	311103-0236		1	PARALLEL PIN ISO 2338 3M6X16 A1	
330	312105-0327		4	SCREW M6S ISO 4017 M5X12 A480	
340	312105-0289		1	SCREW M6S H4X10 A4 70 ISO4017/DIN933	
350	312105-0329		4	SCREW M6S ISO 4017 M5X16 A480	

Pos	Part No	UN	Qty	Description	Page No

UPPER FORMING RING

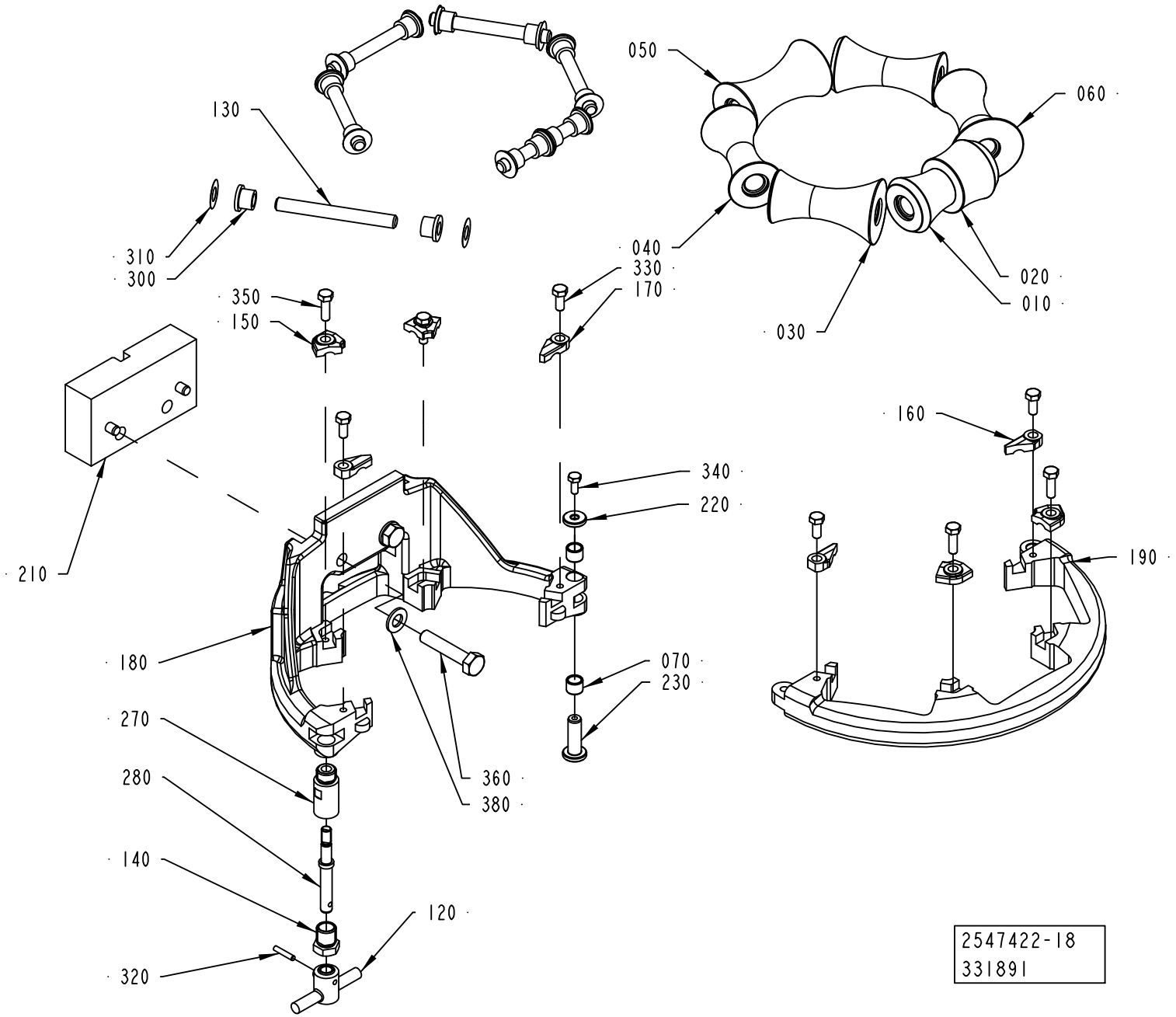

ECM: 375730 - 20090101
Group number: 2547422-0200
Assembly Drawing: 2547422-18_1_AB

This list covers pages from 1-86 to 1-103

Pos	Part No	UN	Qty	Description	Page No	Pos	Part No	UN	Qty	Description	Page No
SEE PREVIOUS LISTS PAGES: 1-87, 1-89, 1-91, 1-93.											

UPPER FORMING RING

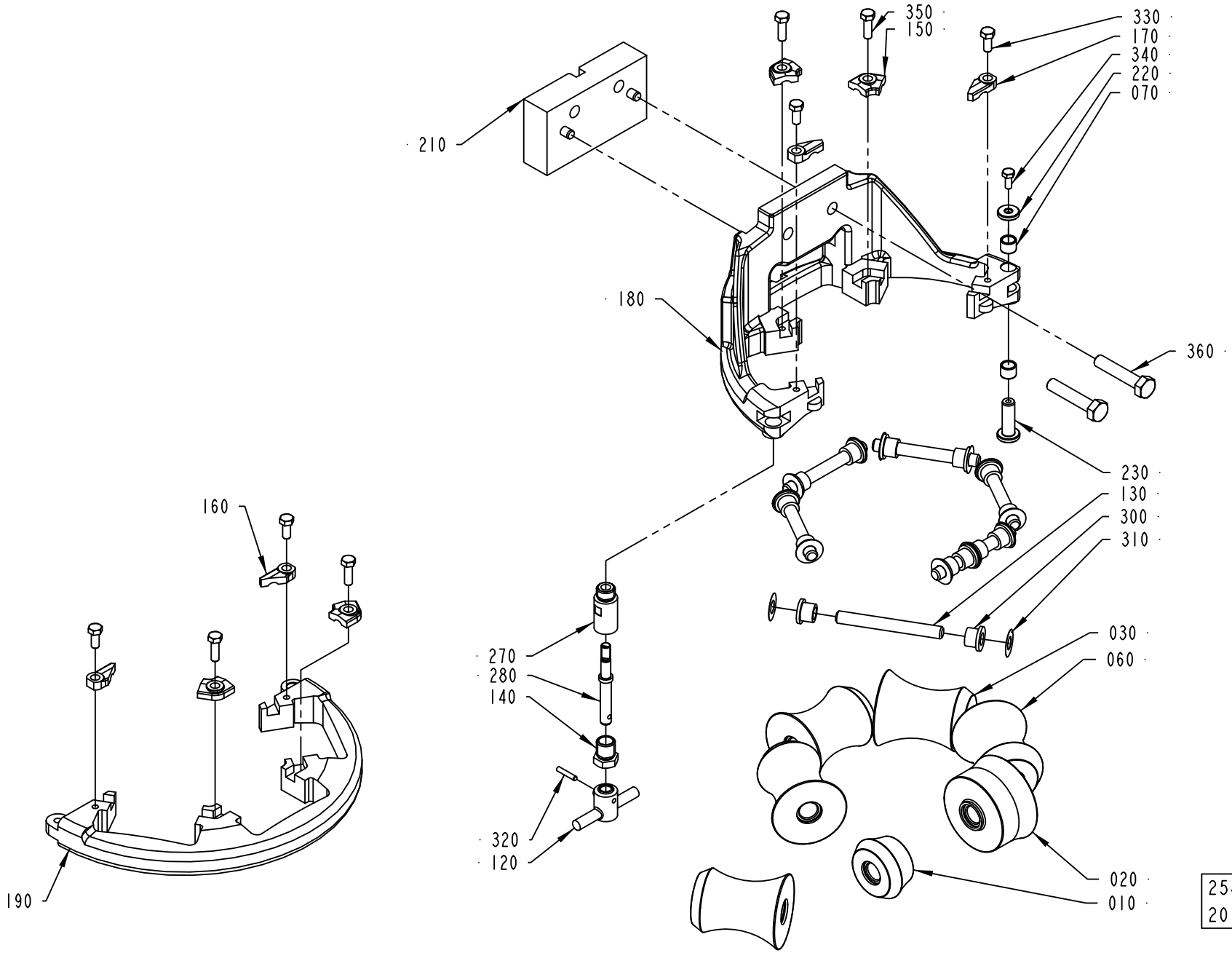

ECM: 375730 - 20090101
Group number: 2547422-0200
Assembly Drawing: 2547422-19_1_AA

This list covers pages from 1-86 to 1-103

Pos	Part No	UN	Qty	Description	Page No	Pos	Part No	UN	Qty	Description	Page No

SEE PREVIOUS LISTS PAGES: 1-87, 1-89, 1-91, 1-93.

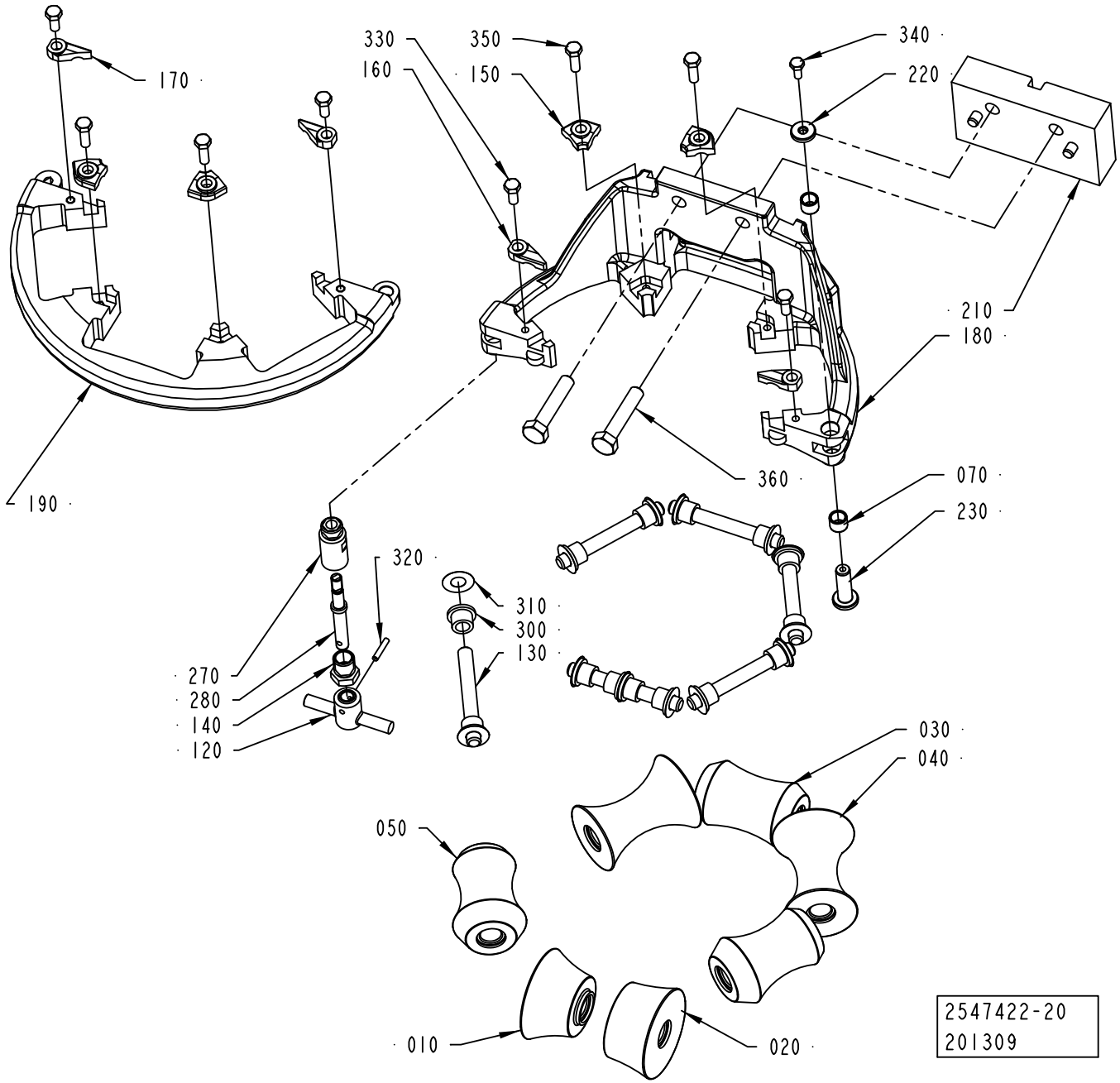
170
330
160
350
150
340
220
210
180
190
360
070
230
320
310
300
130
270
280
140
120
030
040
050
010
020
2547422-20
201309

ECM: 375730 - 20090101
Group number: 2547422-0200
Assembly Drawing: 2547422-20_1_AA

This list covers pages from 1-86 to 1-103

Pos	Part No	UN	Qty	Description	Page No	Pos	Part No	UN	Qty	Description	Page No

SEE PREVIOUS LISTS PAGES: 1-87, 1-89, 1-91, 1-93.

UPPER FORMING RING

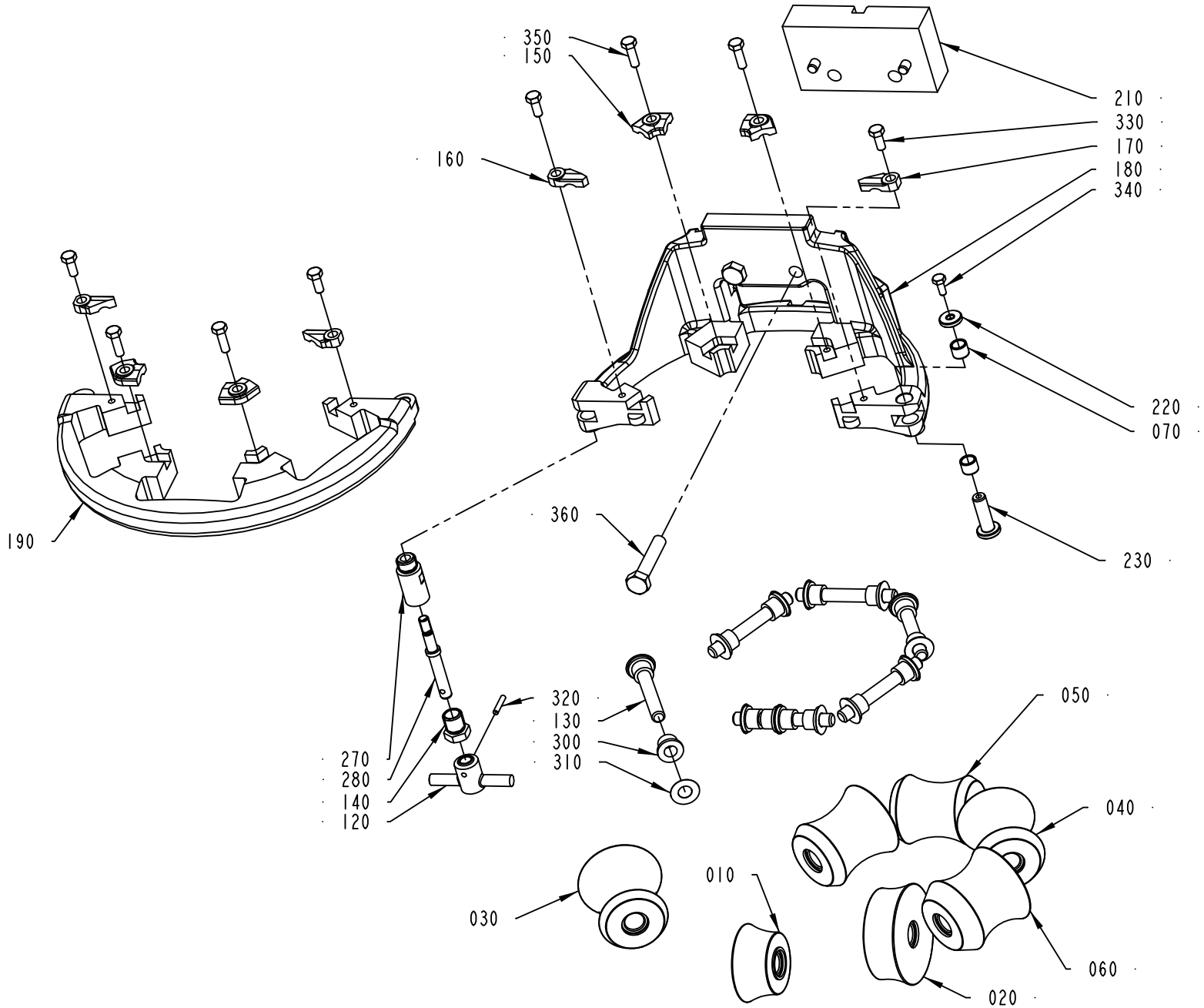

2547422-21
201309

ECM: 375730 - 20090101
Group number: 2547422-0200
Assembly Drawing: 2547422-21_1_AA

This list covers pages from 1-86 to 1-103

Pos	Part No	UN	Qty	Description	Page No	Pos	Part No	UN	Qty	Description	Page No
SEE PREVIOUS LISTS PAGES: 1-87, 1-89, 1-91, 1-93.											

UPPER FORMING RING

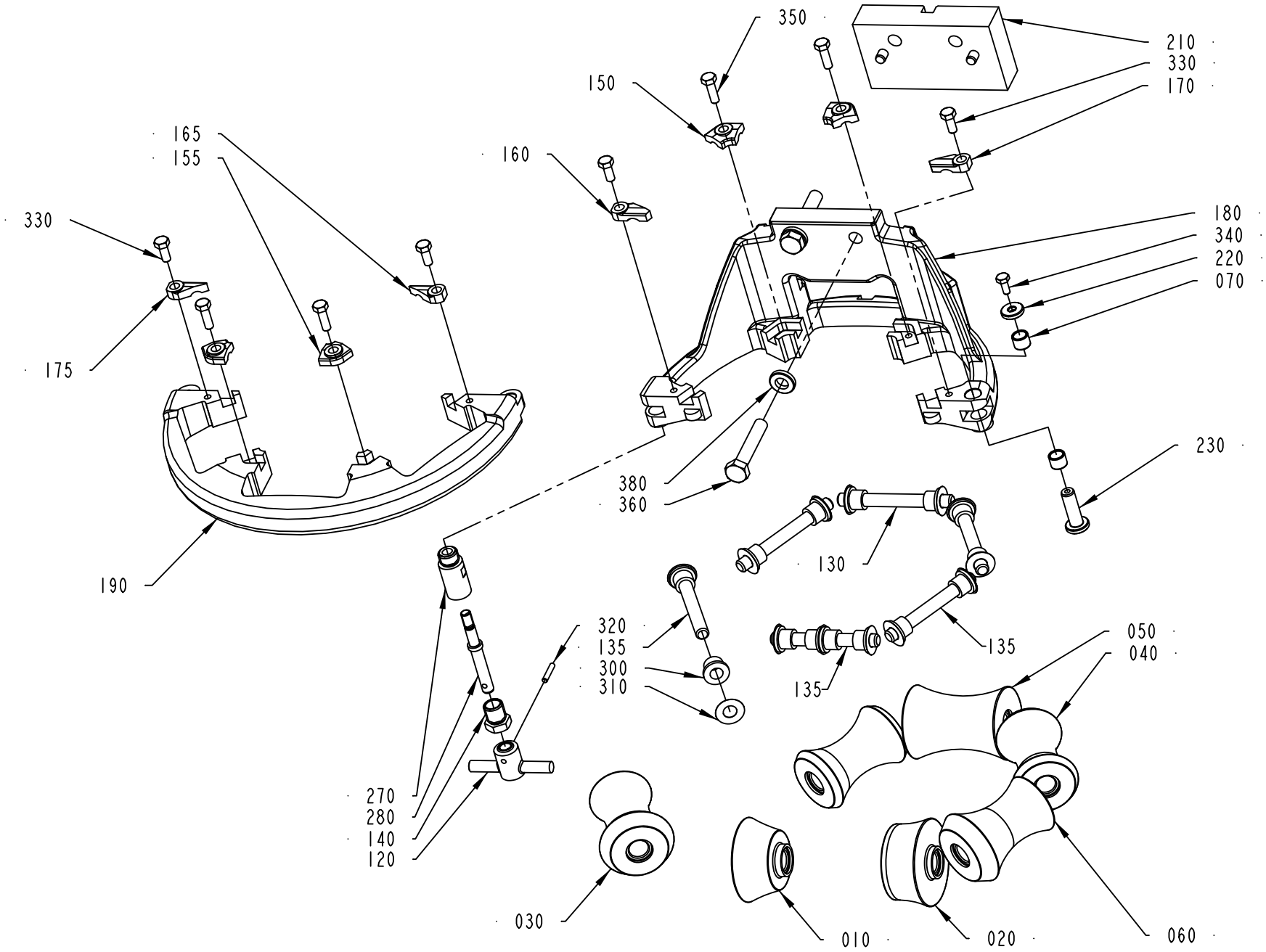

2547422-22
201309

ECM: 375730 - 20090101
Group number: 2547422-0200
Assembly Drawing: 2547422-22_1_AA

This list covers pages from 1-86 to 1-103

Pos	Part No	UN	Qty	Description	Page No	Pos	Part No	UN	Qty	Description	Page No

SEE PREVIOUS LISTS PAGES: 1-87, 1-89, 1-91, 1-93.

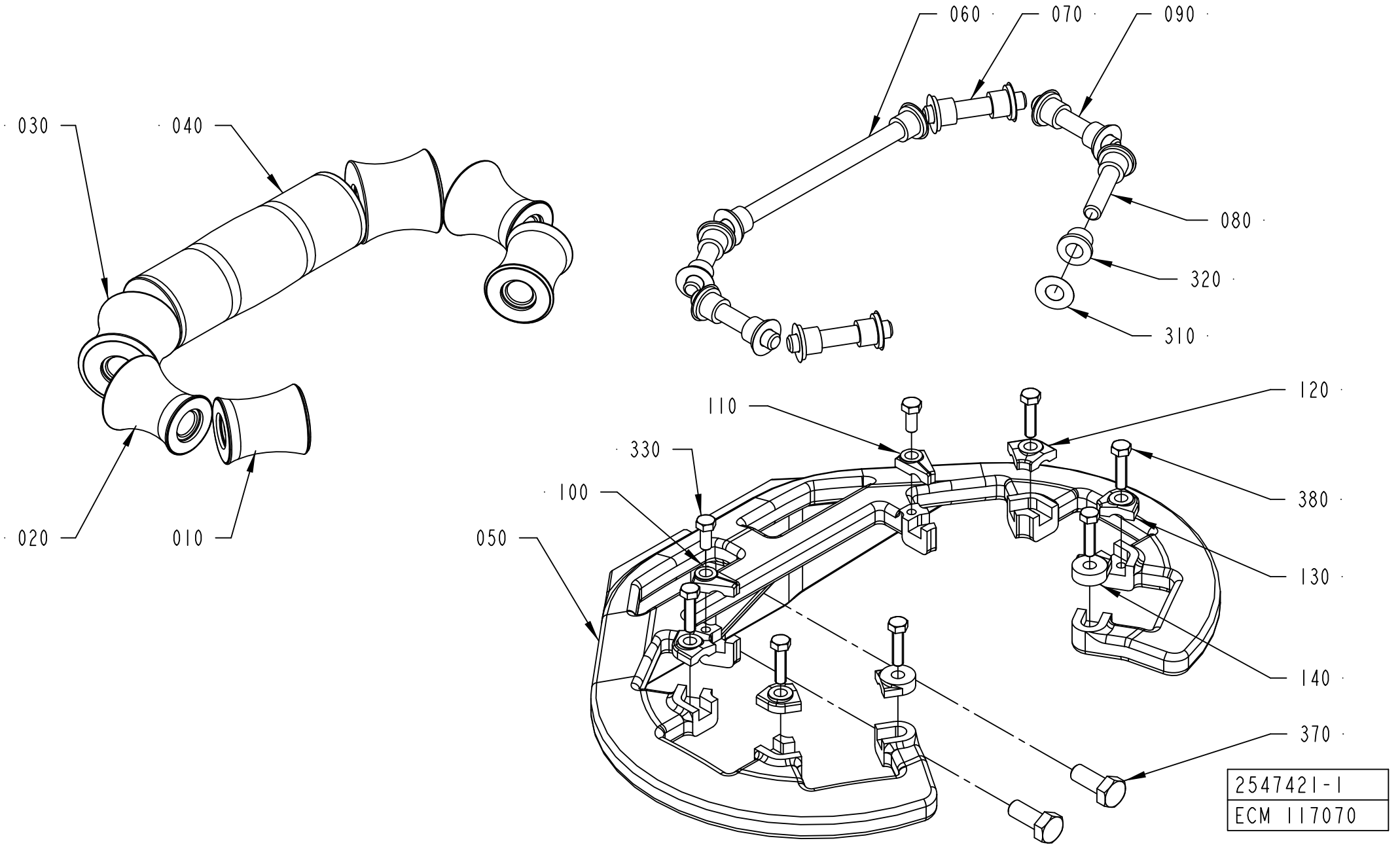
060
070
090
080
320
310
030
040
020
010
120
110
330
380
100
130
050
140
370
2547421-1
ECM 117070

ECM: 350583 - 20080703
Group number: 2547421-0100
Assembly Drawing: 2547421-1_1_AA

This list covers pages from 1-104 to 1-111

Pos	Part No	UN	Qty	Description	Page No
TBA 0500S (See drawing on page: 1-104)					
010	2672986-0000		2	ROLLER	
020	2672985-0000		2	ROLLER	
030	2672970-0000		2	ROLLER	
040	2709302-0000		1	ROLLER	
050	2611038-0000		1	SUPPORT RING	
060	752186-0009		1	SHAFT	
070	752186-0012		2	SHAFT	
080	752186-0012		2	SHAFT	
090	752186-0002		2	SHAFT	
120	2562667-0008		6	LOCK PLATE	
140	2532895-0001		2	LOCK PLATE	
310	2033-0011		14	WASHER	
320	90240-0172		14	FLANGE BUSHING, 8X12X10 MM	
370	312105-0451		2	SCREW M6S ISO 4017 M8X20 A480	
380	312105-0331		8	SCREW M6S ISO 4017 M5X20 A480	
TBA 1890S, TBA 2000S, TBA 1400B (See drawing on page: 1-108)					
010	2601286-0000		2	ROLLER	
020	2601285-0000		2	ROLLER	
030	2601279-0000		2	ROLLER	
040	2601278-0000		1	ROLLER	
050	2634926-0000		1	SUPPORT ROLLER	
060	2522213-0019		1	SHAFT	
070	752186-0006		2	SHAFT	
080	2522213-0020		2	SHAFT	
090	752186-0019		2	SHAFT	
120	2562667-0008		4	LOCK PLATE	
130	2528123-0007		2	LOCK PLATE	
140	2532895-0002		2	LOCK PLATE	
310	2033-0011		14	WASHER	
320	90240-0172		14	FLANGE BUSHING, 8X12X10 MM	
350	315105-0165		2	WASHER BRB 8,4X16 RFR	
370	312105-0452		2	SCREW M6S ISO 4017 M8X22 A480	
380	312105-0329		8	SCREW M6S ISO 4017 M5X16 A480	
TGA 1000SQ, TGA 0750SQ, TGA 0500SQ (See drawing on page: 1-104)					
010	2725532-0000		2	ROLLER	
020	2725531-0000		2	ROLLER	
030	2725530-0000		2	ROLLER	
040	2731442-0000		1	ROLLER	
050	2731446-0000		1	SUPPORT ROLLER	
060	2522213-0008		1	SHAFT	
070	752186-0012		2	SHAFT	
090	752186-0004		4	SHAFT	
120	2562667-0008		6	LOCK PLATE	
140	2532895-0001		2	LOCK PLATE	
310	2033-0011		14	WASHER	
320	90240-0172		14	FLANGE BUSHING, 8X12X10 MM	
370	312105-0453		2	SCREW M6S ISO 4017 M8X25 A480	
380	312105-0331		8	SCREW M6S ISO 4017 M5X20 A480	
TPA 0330SQ (See drawing on page: 1-104)					
010	2682169-0000		2	ROLLER	
020	2682168-0000		2	ROLLER	
030	2682167-0000		2	ROLLER	
040	2682170-0000		1	ROLLER	
050	2611038-0000		1	SUPPORT RING	
060	752186-0009		1	SHAFT	
070	752186-0012		2	SHAFT	
080	752186-0012		2	SHAFT	
090	752186-0002		2	SHAFT	
120	2562667-0008		6	LOCK PLATE	
140	2532895-0001		2	LOCK PLATE	
310	2033-0011		14	WASHER	
320	90240-0172		14	FLANGE BUSHING, 8X12X10 MM	
370	312105-0453		2	SCREW M6S ISO 4017 M8X25 A480	
380	312105-0331		8	SCREW M6S ISO 4017 M5X20 A480	
TPA 0500SQ (See drawing on page: 1-104)					
010	2680193-0000		2	ROLLER	
020	2685633-0000		2	ROLLER	
030	2685632-0000		2	ROLLER	
040	2685631-0000		1	ROLLER	
050	2611038-0000		1	SUPPORT RING	
060	752186-0009		1	SHAFT	
070	752186-0012		2	SHAFT	
080	752186-0012		2	SHAFT	
090	752186-0002		2	SHAFT	
120	2562667-0008		6	LOCK PLATE	
140	2532895-0001		2	LOCK PLATE	
310	2033-0011		14	WASHER	
320	90240-0172		14	FLANGE BUSHING, 8X12X10 MM	
370	312105-0453		2	SCREW M6S ISO 4017 M8X25 A480	
380	312105-0331		8	SCREW M6S ISO 4017 M5X20 A480	
TPA 1000SQ, TPA 0750SQ (See drawing on page: 1-110)					
010	2889461-0000		2	ROLLER	
020	2901229-0000		2	ROLLER	

Machine Type | Group Description | Used-In | Group Number | Page No

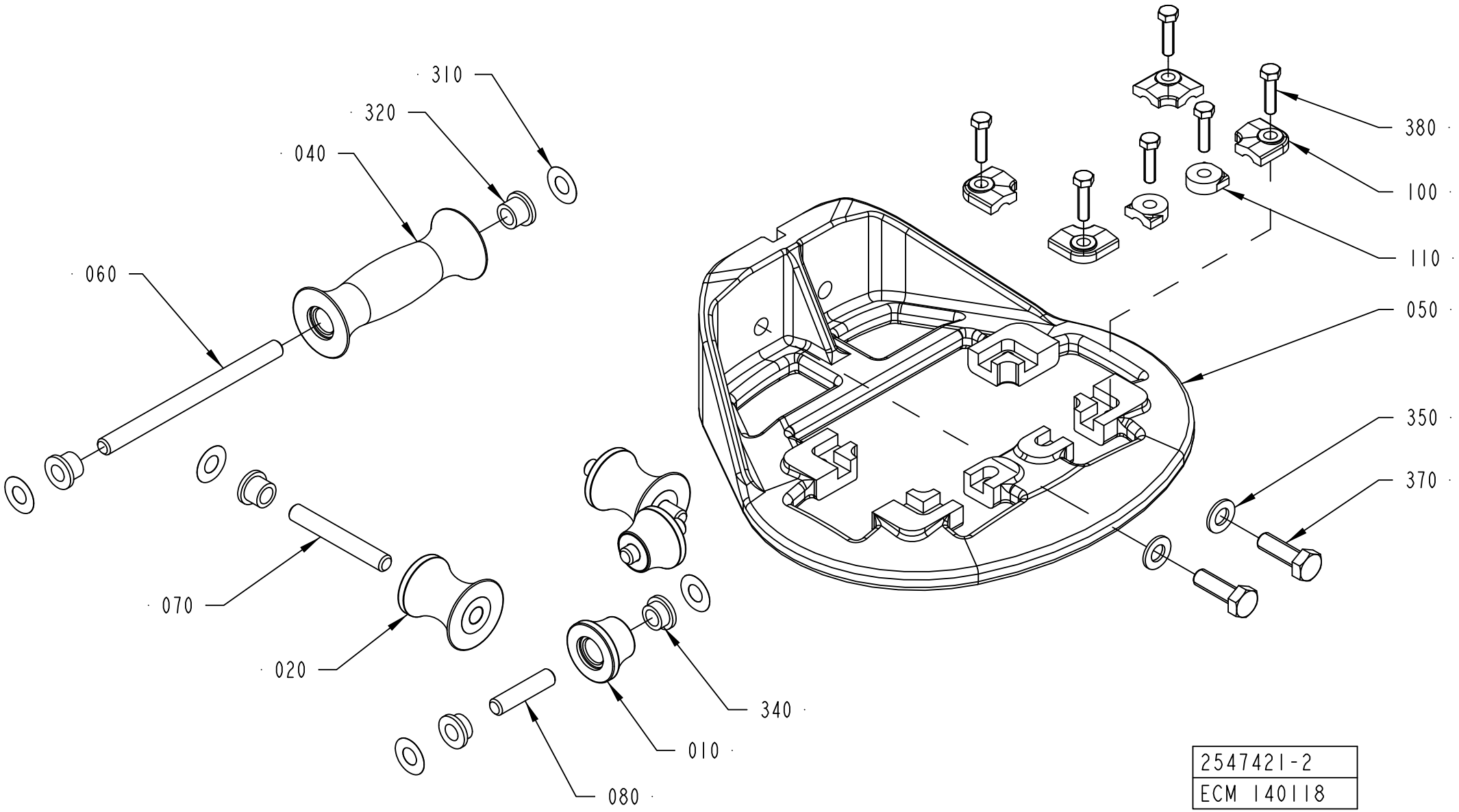
310
320
040
060
070
020
080
010
340
380
100
110
050
350
370
2547421-2
ECM 140118

ECM: 350583 - 20080703
Group number: 2547421-0100
Assembly Drawing: 2547421-2_1_AA

This list covers pages from 1-104 to 1-111

Pos	Part No	UN	Qty	Description	Page No
TPA 1000SQ, TPA 0750SQ (Cont'd) (See drawing on page: 1-110)					
030	2901228-0000		2	ROLLER	
040	2901291-0000		1	ROLLER	
050	2907975-0000		1	BRACKET	
060	2889464-0000		1	SHAFT	
070	752186-0006		2	SHAFT	
080	752186-0001		2	SHAFT	
090	752186-0004		2	SHAFT	
120	2889463-0000		2	LOCK PLATE	
130	2889462-0000		6	PLATE	
160	2907974-0000		1	FRAME	
310	2033-0011		14	WASHER	
320	90240-0172		14	FLANGE BUSHING, 8X12X10 MM	
330	312105-0329		2	SCREW M6S ISO 4017 M5X16 A480	
370	312105-0449		2	SCREW M6S ISO 4017 M8X16 A480	
380	312105-0325		6	SCREW M6S ISO 4017 M5X10 A480	
400	312109-0374		4	SCREW M6S ISO 4017 M6X30 A480	
A3/FLEX TBA 1000S (See drawing on page: 1-104)					
010	2512748-0000		2	ROLLER	
020	2512749-0000		2	ROLLER	
030	2512746-0000		2	ROLLER	
040	2514521-0000		2	ROLLER	
050	2552161-0000		1	SUPPORT RING	
060	2522213-0005		1	SHAFT	
070	752186-0005		2	SHAFT	
080	2522213-0004		2	SHAFT	
090	752186-0019		2	SHAFT	
100	2552176-0003		1	LOCK PLATE	
110	2552177-0003		1	LOCK PLATE	
120	2528123-0007		2	LOCK PLATE	
130	2528123-0001		2	LOCK PLATE	
140	2532895-0003		2	LOCK PLATE	
310	2033-0011		16	WASHER	
320	90240-0172		16	FLANGE BUSHING, 8X12X10 MM	
330	312105-0327		2	SCREW M6S ISO 4017 M5X12 A480	
370	312105-0451		2	SCREW M6S ISO 4017 M8X20 A480	
380	312105-0331		6	SCREW M6S ISO 4017 M5X20 A480	
A3/FLEX TBA 1000SQ, A3/FLEX TBA 0500SQ (See drawing on page: 1-104)					
010	2634971-0000		2	ROLLER	
020	2634970-0000		2	ROLLER	
030	2634969-0000		2	ROLLER	
040	2634968-0000		1	ROLLER	
050	2634967-0000		1	SUPPORT RING	
060	2522213-0008		1	SHAFT	
070	752186-0012		2	SHAFT	
080	2522213-0009		4	SHAFT	
120	2562667-0009		6	LOCK PLATE	
140	2532895-0003		2	LOCK PLATE	
310	2033-0011		14	WASHER	
320	90240-0172		14	FLANGE BUSHING, 8X12X10 MM	
370	312105-0451		2	SCREW M6S ISO 4017 M8X20 A480	
380	312105-0331		8	SCREW M6S ISO 4017 M5X20 A480	
TBA 0200B, TBA 0250B, TBA 0330S (See drawing on page: 1-106)					
010	2544881-0000		2	ROLLER	
020	751492-0000		2	ROLL	
040	751491-0000		1	ROLL	
050	2565431-0000		1	SUPPORT RING	
060	2522213-0005		1	SHAFT	
070	2522213-0006		2	SHAFT	
080	2522213-0004		2	SHAFT	
100	2532912-0002		4	LOCK PLATE	
110	2532895-0003		2	LOCK PLATE	
310	2033-0011		10	WASHER	
320	90240-0172		10	FLANGE BUSHING, 8X12X10 MM	
350	315105-0165		2	WASHER BRB 8,4X16 RFR	
370	312105-0453		2	SCREW M6S ISO 4017 M8X25 A480	
380	312105-0331		6	SCREW M6S ISO 4017 M5X20 A480	
TBA 0200M, TBA 0250S (See drawing on page: 1-106)					
010	2611027-0000		2	ROLLER	
020	2611026-0000		2	ROLLER	
040	2611025-0000		1	ROLLER	
050	2611028-0000		1	SUPPORT ROLLER	
060	752186-0008		1	SHAFT	
070	2522213-0006		2	SHAFT	
080	752186-0013		2	SHAFT	
100	2532912-0002		4	LOCK PLATE	
110	2532895-0006		2	LOCK PLATE	
310	2033-0011		10	WASHER	
320	90240-0172		6	FLANGE BUSHING, 8X12X10 MM	
340	752156-0000		4	FLANGE BUSHING	
350	315105-0165		2	WASHER BRB 8,4X16 RFR	
370	312105-0453		2	SCREW M6S ISO 4017 M8X25 A480	
380	312105-0331		6	SCREW M6S ISO 4017 M5X20 A480	
TBA 0200S, TPA 0250SQ, TPA 0200SQ (See drawing on page: 1-106)					

Machine Type | Group Description | Used-In | Group Number | Page No

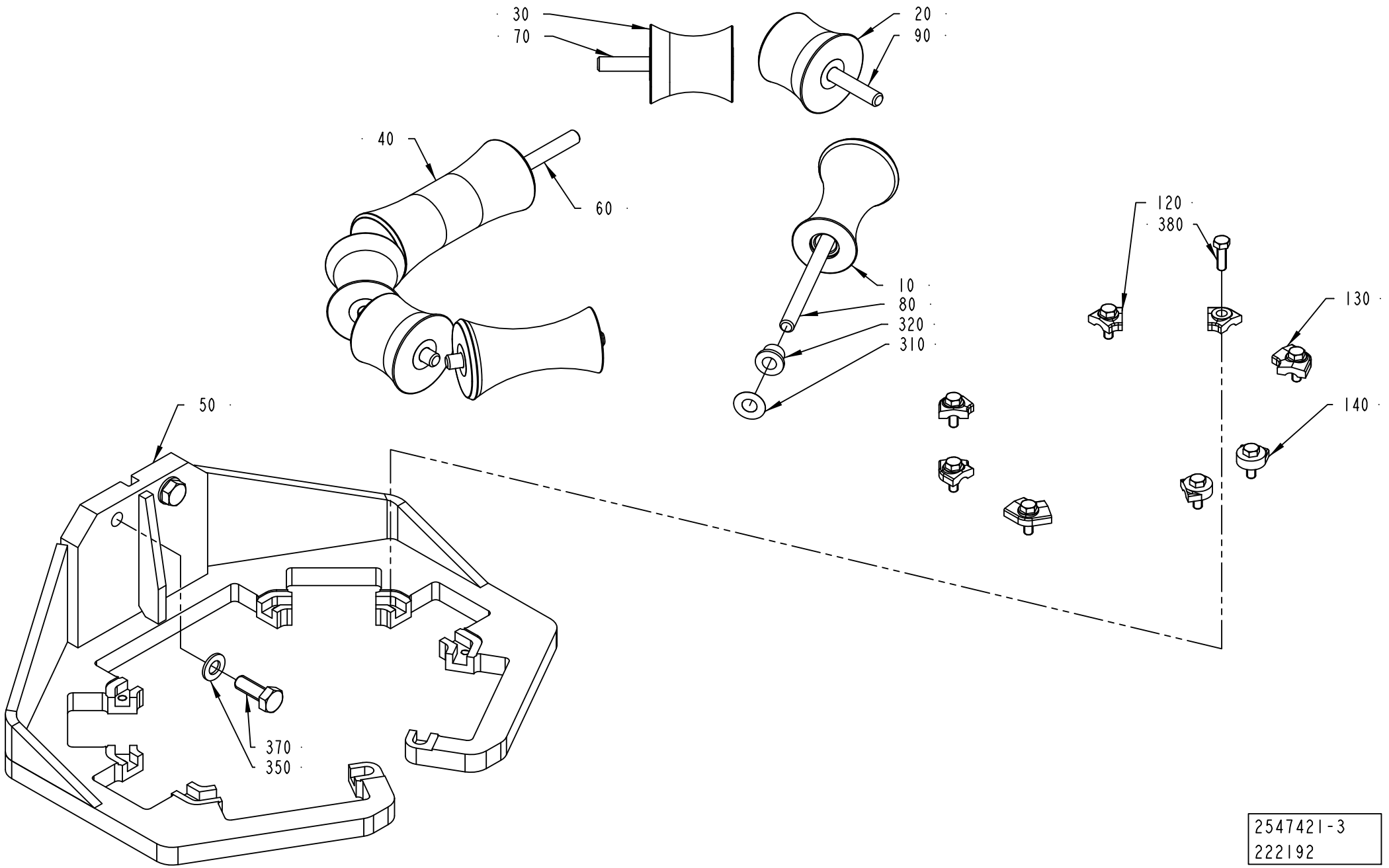

2547421-3
222192

Pos	Part No	UN	Qty	Description	Page No
TBA 0200S, TPA 0250SQ, TPA 0200SQ (Cont'd) (See drawing on page: 1-106)					
010	752128-0000		2	FORMING ROLLER	
020	752127-0000		2	FORMING ROLLER	
040	752126-0000		1	FORMING ROLLER	
050	2565430-0000		1	SUPPORT RING	
060	752186-0008		1	SHAFT	
070	2522213-0006		2	SHAFT	
080	2522213-0010		2	SHAFT	
100	2532912-0001		4	LOCK PLATE	
110	2532895-0002		2	LOCK PLATE	
310	2033-0011		10	WASHER	
320	90240-0172		6	FLANGE BUSHING, 8X12X10 MM	
340	752156-0000		4	FLANGE BUSHING	
350	315105-0165		2	WASHER BRB 8,4X16 RFR	
370	312105-0453		2	SCREW M6S ISO 4017 M8X25 A480	
380	312105-0331		6	SCREW M6S ISO 4017 M5X20 A480	
TBA 0200SQ, TBA 0250SQ (See drawing on page: 1-108)					
010	2761021-0000		2	ROLLER	
020	2761020-0000		2	ROLLER	
030	2761019-0000		2	ROLLER	
040	2761018-0000		1	ROLLER	
050	2761017-0000		1	SUPPORT RING	
060	2522213-0004		1	SHAFT	
070	752186-0006		2	SHAFT	
080	752186-0006		2	SHAFT	
090	2522213-0006		2	SHAFT	
120	2761022-0000		2	LOCK PLATE	
130	2528123-0007		4	LOCK PLATE	
140	2532895-0002		2	LOCK PLATE	
310	2033-0011		14	WASHER	
320	90240-0172		14	FLANGE BUSHING, 8X12X10 MM	
370	312105-0453		2	SCREW M6S ISO 4017 M8X25 A480	
380	312105-0331		8	SCREW M6S ISO 4017 M5X20 A480	
TBA 0500B, TBA 1000B, TBA 1500S (See drawing on page: 1-104)					
010	2552206-0000		2	ROLLER	
020	2552205-0000		2	ROLLER	
030	2552188-0000		2	ROLLER	
040	2552187-0000		1	ROLLER	
050	2552160-0000		1	SUPPORT RING	
060	2522213-0005		1	SHAFT	
070	752186-0005		2	SHAFT	
080	2522213-0004		2	SHAFT	
090	752186-0019		2	SHAFT	
100	2552176-0001		1	LOCK PLATE	
110	2552177-0001		1	LOCK PLATE	
120	2528123-0002		2	LOCK PLATE	
130	2528123-0008		2	LOCK PLATE	
140	2532895-0004		2	LOCK PLATE	
310	2033-0011		14	WASHER	
320	90240-0172		14	FLANGE BUSHING, 8X12X10 MM	
330	312105-0327		2	SCREW M6S ISO 4017 M5X12 A480	
370	312105-0451		2	SCREW M6S ISO 4017 M8X20 A480	
380	312105-0331		6	SCREW M6S ISO 4017 M5X20 A480	

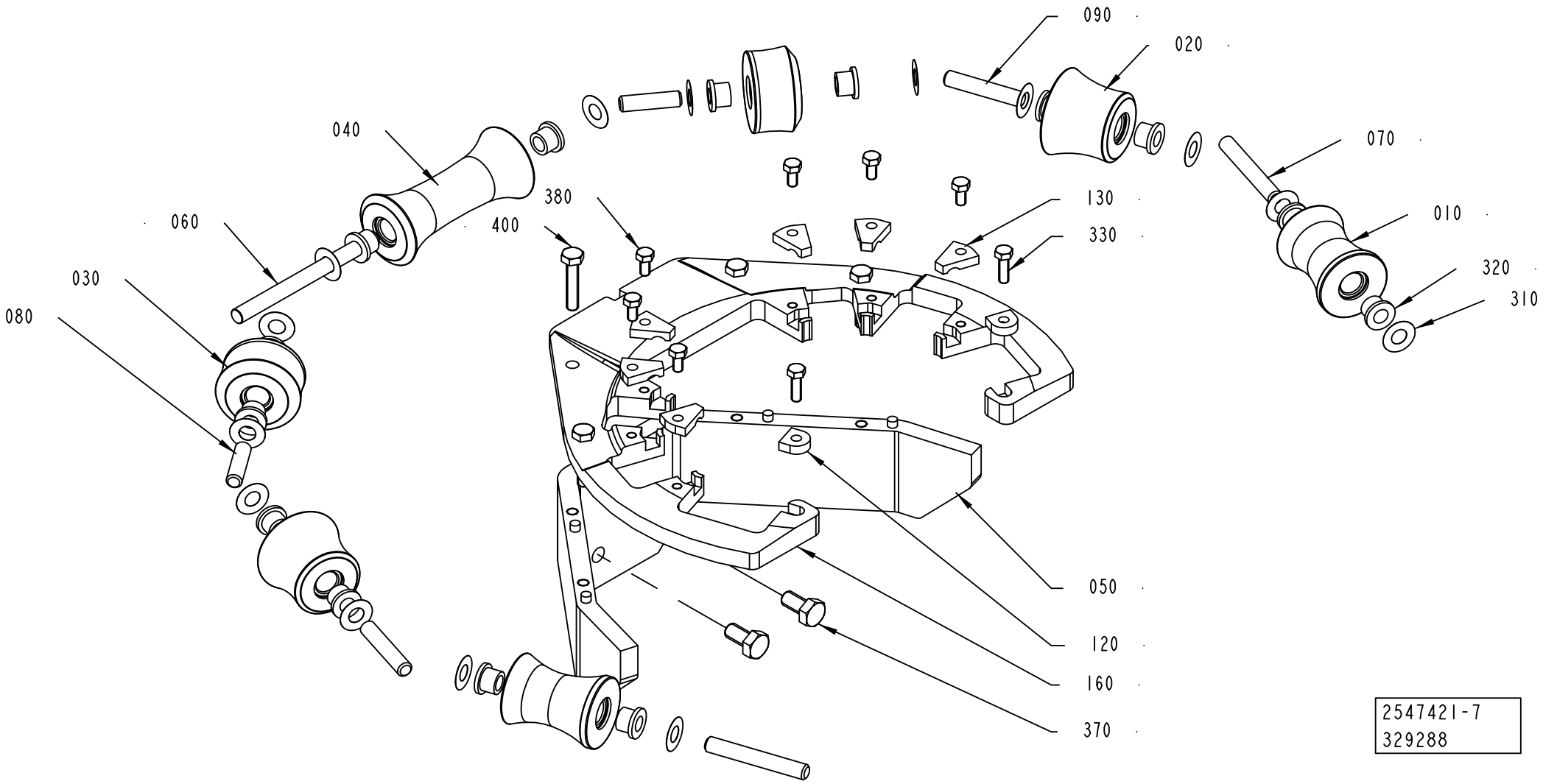
090
020
040
070
380
130
060
400
330
010
030
320
080
310
050
120
160
370
2547421-7
329288

ECM: 350583 - 20080703
Group number: 2547421-0100
Assembly Drawing: 2547421-7_1_AA

This list covers pages from 1-104 to 1-111

Pos	Part No	UN	Qty	Description	Page No
SEE PREVIOUS LISTS PAGES: 1-105, 1-107, 1-109.					

Pos	Part No	UN	Qty	Description	Page No

Machine Type | Group Description | Used-In | Group Number | Page No

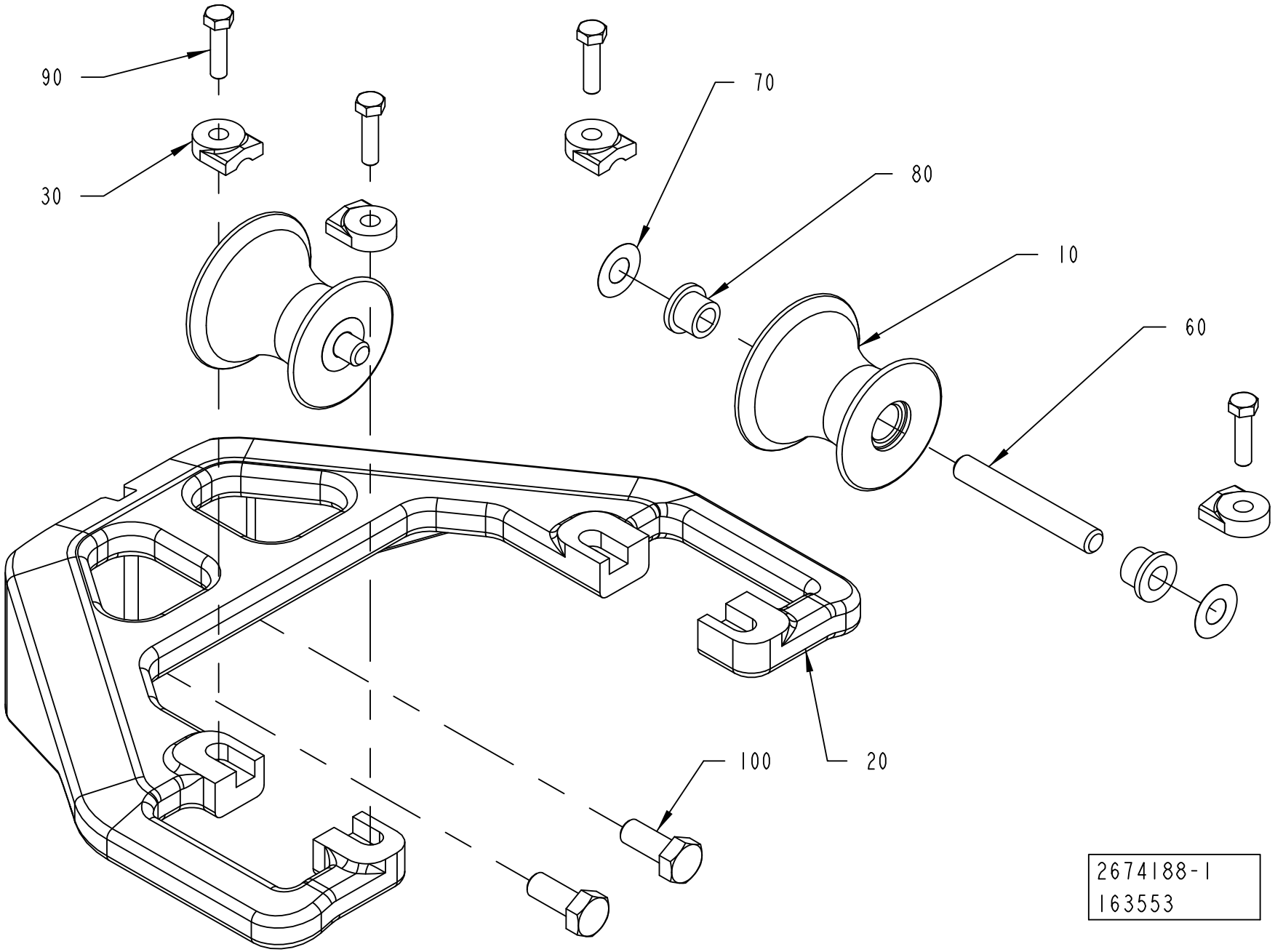
90
30
70
80
10
60
100
20
2674188-1
163553

ECM: 315392 - 20080401
Group number: 2674188-0100
Assembly Drawing: 2674188-1_1_AA

This list covers pages from 1-112 to 1-115

Pos	Part No	UN	Qty	Description	Page No
TBA 0200B, TBA 0250B, TBA 0330S (See drawing on page: 1-112)					
010	2634943-0000		2	ROLLER	
020	2657860-0000		1	BRACKET	
030	2532895-0005		4	LOCK PLATE	
060	2522213-0007		2	SHAFT	
070	2033-0011		4	WASHER	
080	90240-0172		4	FLANGE BUSHING, 8X12X10 MM	
090	312105-0329		4	SCREW M6S ISO 4017 M5X16 A480	
100	312105-0449		2	SCREW M6S ISO 4017 M8X16 A480	
TBA 0200M, TBA 0250S (See drawing on page: 1-114)					
005	2611039-0000		1	ROLLER	
010	2611040-0000		2	ROLLER	
020	2611041-0000		1	SUPPORT ROLLER	
030	2532895-0009		4	LOCK PLATE	
040	2532895-0003		2	LOCK PLATE	
060	2522213-0006		3	SHAFT	
070	2033-0011		6	WASHER	
080	90240-0172		6	FLANGE BUSHING, 8X12X10 MM	
090	312105-0331		6	SCREW M6S ISO 4017 M5X20 A480	
100	312105-0451		2	SCREW M6S ISO 4017 M8X20 A480	
TBA 0200S, TPA 0250SQ, TPA 0200SQ (See drawing on page: 1-112)					
010	2640354-0000		2	ROLLER	
020	2640353-0000		1	BRACKET	
030	2532895-0009		4	LOCK PLATE	
060	2522213-0006		2	SHAFT	
070	2033-0011		4	WASHER	
080	90240-0172		4	FLANGE BUSHING, 8X12X10 MM	
090	312105-0331		4	SCREW M6S ISO 4017 M5X20 A480	
100	312105-0451		2	SCREW M6S ISO 4017 M8X20 A480	

Pos	Part No	UN	Qty	Description	Page No

EDGE ROLLER

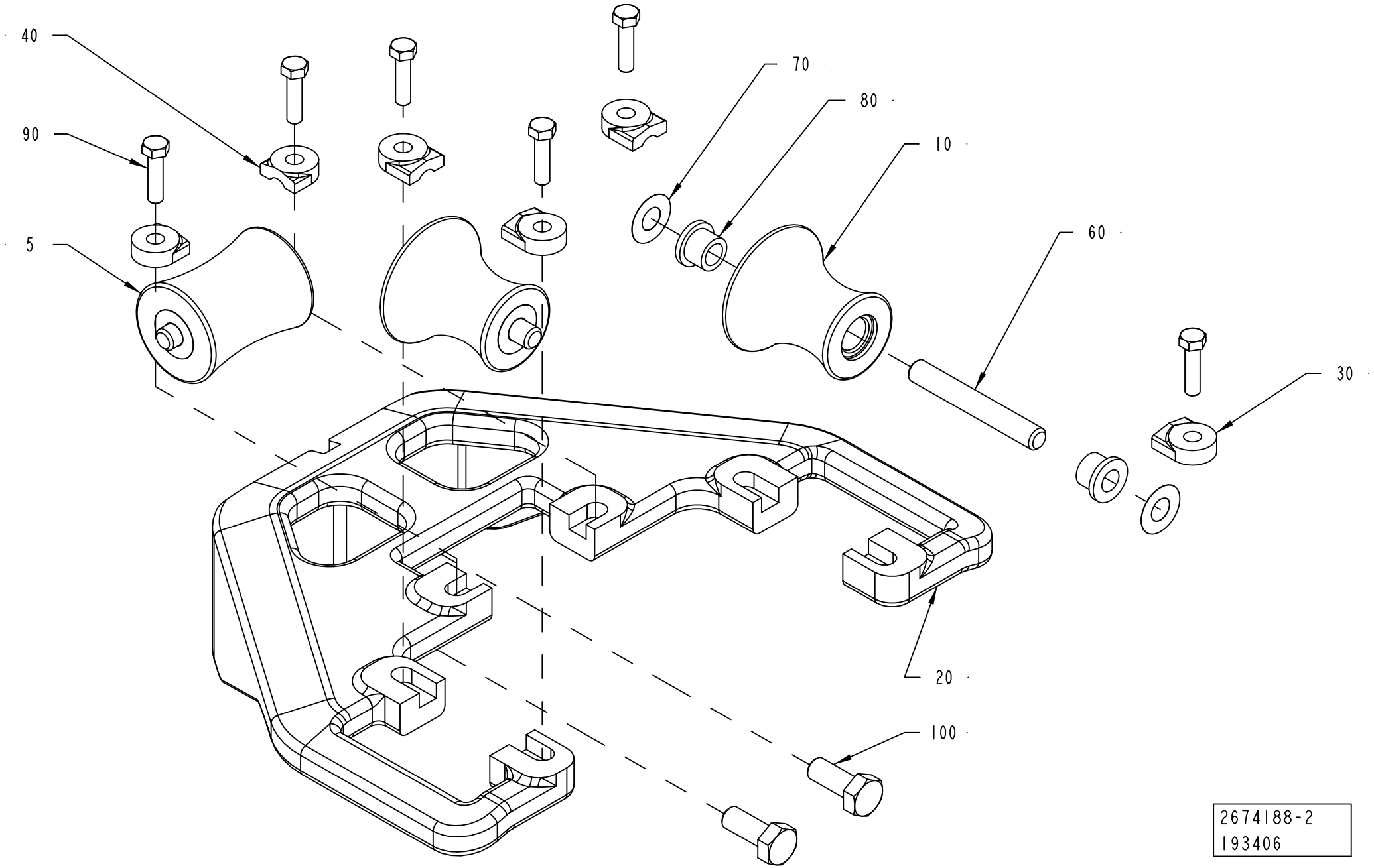

ECM: 315392 - 20080401
Group number: 2674188-0100
Assembly Drawing: 2674188-2_1_AA

This list covers pages from 1-112 to 1-115

Pos	Part No	UN	Qty	Description	Page No
TBA 0200B, TBA 0250B, TBA 0330S (See drawing on page: 1-112)					
010	2634943-0000		2	ROLLER	
020	2657860-0000		1	BRACKET	
030	2532895-0005		4	LOCK PLATE	
060	2522213-0007		2	SHAFT	
070	2033-0011		4	WASHER	
080	90240-0172		4	FLANGE BUSHING, 8X12X10 MM	
090	312105-0329		4	SCREW M6S ISO 4017 M5X16 A480	
100	312105-0449		2	SCREW M6S ISO 4017 M8X16 A480	
TBA 0200M, TBA 0250S (See drawing on page: 1-114)					
005	2611039-0000		1	ROLLER	
010	2611040-0000		2	ROLLER	
020	2611041-0000		1	SUPPORT ROLLER	
030	2532895-0009		4	LOCK PLATE	
040	2532895-0003		2	LOCK PLATE	
060	2522213-0006		3	SHAFT	
070	2033-0011		6	WASHER	
080	90240-0172		6	FLANGE BUSHING, 8X12X10 MM	
090	312105-0331		6	SCREW M6S ISO 4017 M5X20 A480	
100	312105-0451		2	SCREW M6S ISO 4017 M8X20 A480	
TBA 0200S, TPA 0250SQ, TPA 0200SQ (See drawing on page: 1-112)					
010	2640354-0000		2	ROLLER	
020	2640353-0000		1	BRACKET	
030	2532895-0009		4	LOCK PLATE	
060	2522213-0006		2	SHAFT	
070	2033-0011		4	WASHER	
080	90240-0172		4	FLANGE BUSHING, 8X12X10 MM	
090	312105-0331		4	SCREW M6S ISO 4017 M5X20 A480	
100	312105-0451		2	SCREW M6S ISO 4017 M8X20 A480	

Pos	Part No	UN	Qty	Description	Page No

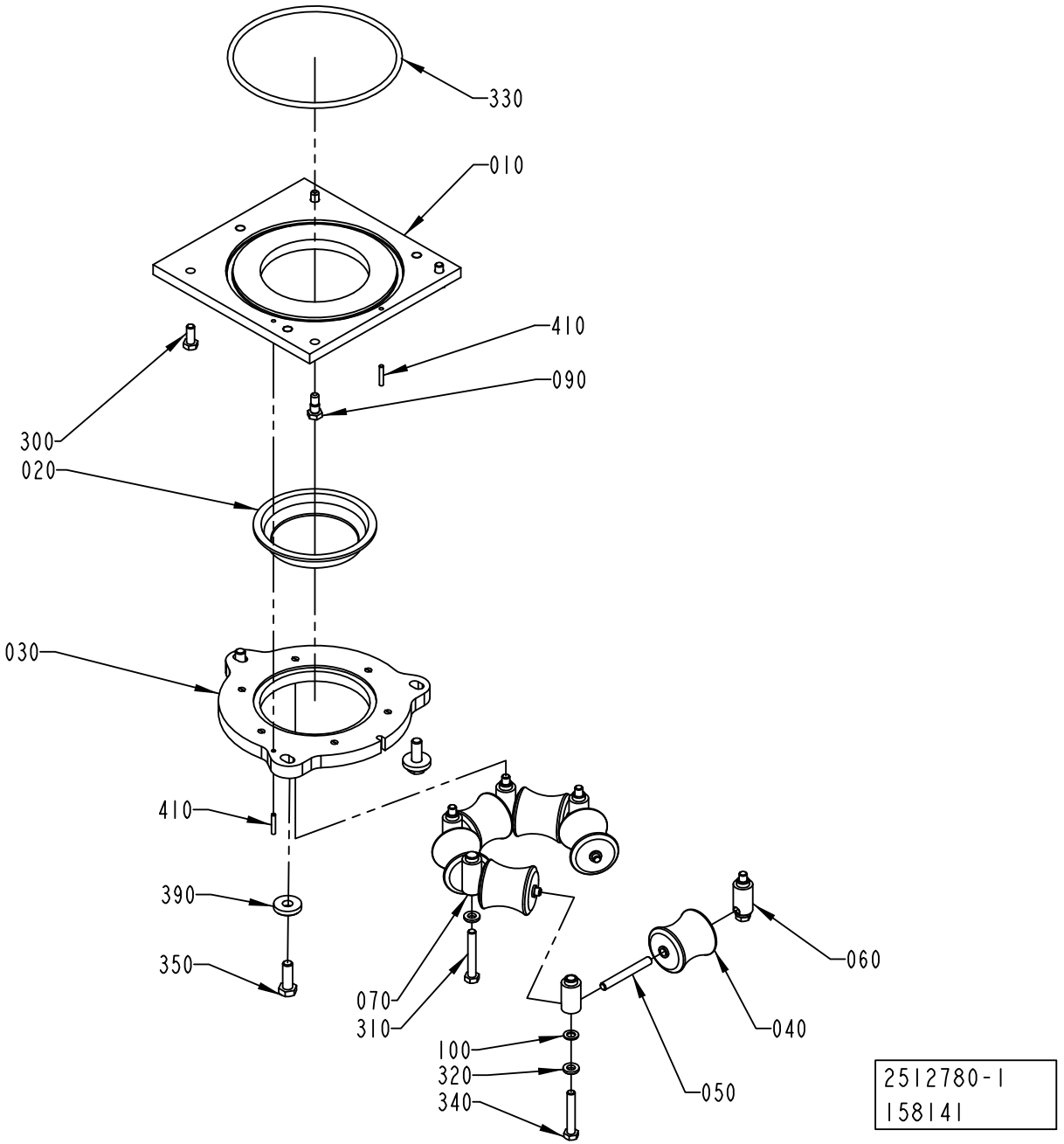
330
010
410
090
300
020
030
410
390
350
070
310
100
320
340
060
040
050
2512780-1
158141

ECM: 395616 - 20090522
Group number: 2512780-0100
Assembly Drawing: 2512780-1_1_AB

This list covers pages from 1-116 to 1-121

Pos	Part No	UN	Qty	Description	Page No
TBA 0500B, TBA 1000B, TBA 1500S (See drawing on page: 1-116)					
010	2559104-0000		1	PLATE	
020	466042-0000		1	SEAL	
030	2512779-0000		1	RING	
040	466046-0000		6	ROLLER	
050	263655-0009		6	SHAFT	
060	1036954-0000		4	AXLE SUPPORT	
070	1036955-0000		2	AXLE SUPPORT	
100	1129431-0000		4	WASHER	
310	312105-0462		2	SCREW M6S ISO 4014 M8X55 A480	
320	315115-0165		6	WASHER PLAIN, TBRB 8,4/16 H=3	
340	312109-0461		4	SCREW M6S ISO 4017 M8X50 A480	
350	312105-0495		3	SCREW M6S ISO 4017 M10X30 A480	
390	315125-0173		3	WASHER TBRSB 10,5X28X6 A4	
410	311103-1274		2	PARALLEL PIN ISO 2338 4M6X24 A1	
TBA 0500S (See drawing on page: 1-116)					
010	2559103-0000		1	PLATE	
020	466089-0000		1	SEAL	
030	2559102-0000		1	RING	
040	466092-0000		6	ROLL	
050	263655-0007		6	SHAFT	
060	1036954-0000		4	AXLE SUPPORT	
070	1036955-0000		2	AXLE SUPPORT	
100	1129431-0000		4	WASHER	
310	312105-0462		2	SCREW M6S ISO 4014 M8X55 A480	
320	315115-0165		6	WASHER PLAIN, TBRB 8,4/16 H=3	
340	312109-0461		4	SCREW M6S ISO 4017 M8X50 A480	
350	312105-0495		3	SCREW M6S ISO 4017 M10X30 A480	
390	315125-0173		3	WASHER TBRSB 10,5X28X6 A4	
410	311103-1274		2	PARALLEL PIN ISO 2338 4M6X24 A1	
TBA 0500SQ, TBA 1000SQ (See drawing on page: 1-116)					
010	2559104-0000		1	PLATE	
020	579318-0000		1	SEAL	
030	2512779-0000		1	RING	
040	1490762-0000		6	ROLLER	
050	263655-0009		6	SHAFT	
060	1036954-0000		4	AXLE SUPPORT	
070	1036955-0000		2	AXLE SUPPORT	
100	1129431-0000		4	WASHER	
310	312105-0462		2	SCREW M6S ISO 4014 M8X55 A480	
320	315115-0165		6	WASHER PLAIN, TBRB 8,4/16 H=3	
340	312109-0461		4	SCREW M6S ISO 4017 M8X50 A480	
350	312105-0495		3	SCREW M6S ISO 4017 M10X30 A480	
390	315125-0173		3	WASHER TBRSB 10,5X28X6 A4	
410	311103-1274		2	PARALLEL PIN ISO 2338 4M6X24 A1	
TBA 1000S (See drawing on page: 1-116)					
010	2559104-0000		1	PLATE	
020	567743-0000		1	SEAL	
030	2512779-0000		1	RING	
040	573504-0000		6	ROLLER	
050	263655-0009		6	SHAFT	
060	1036954-0000		4	AXLE SUPPORT	
070	1036955-0000		2	AXLE SUPPORT	
100	1129431-0000		4	WASHER	
310	312105-0462		2	SCREW M6S ISO 4014 M8X55 A480	
320	315115-0165		6	WASHER PLAIN, TBRB 8,4/16 H=3	
340	312109-0461		4	SCREW M6S ISO 4017 M8X50 A480	
350	312105-0495		3	SCREW M6S ISO 4017 M10X30 A480	
390	315125-0173		3	WASHER TBRSB 10,5X28X6 A4	
410	311103-1274		2	PARALLEL PIN ISO 2338 4M6X24 A1	
TBA 2000S (See drawing on page: 1-116)					
010	2582616-0000		1	PLATE	
020	2582623-0000		1	SEAL	
030	2582629-0000		1	RING	
040	2582630-0000		6	ROLLER	
050	263655-0015		6	SHAFT	
060	1036954-0000		4	AXLE SUPPORT	
070	1036955-0000		2	AXLE SUPPORT	
100	1129431-0000		4	WASHER	
310	312105-0462		2	SCREW M6S ISO 4014 M8X55 A480	
320	315115-0165		6	WASHER PLAIN, TBRB 8,4/16 H=3	
340	312109-0461		4	SCREW M6S ISO 4017 M8X50 A480	
350	312105-0495		3	SCREW M6S ISO 4017 M10X30 A480	
390	315125-0173		3	WASHER TBRSB 10,5X28X6 A4	
410	311103-1274		2	PARALLEL PIN ISO 2338 4M6X24 A1	
TGA 1000SQ, TGA 0750SQ, TGA 0500SQ (See drawing on page: 1-120)					
010	3018414-0000		1	PLATE	
020	2641271-0000		1	SEAL	
410	311103-1274		1	PARALLEL PIN ISO 2338 4M6X24 A1	
TGA 1500SQ (See drawing on page: 1-120)					
010	2968252-0000		1	PLATE	
020	466042-0000		1	SEAL	
410	311103-1274		1	PARALLEL PIN ISO 2338 4M6X24 A1	
TPA 0500SQ (See drawing on page: 1-118)					

Machine Type | Group Description | Used-In | Group Number | Page No

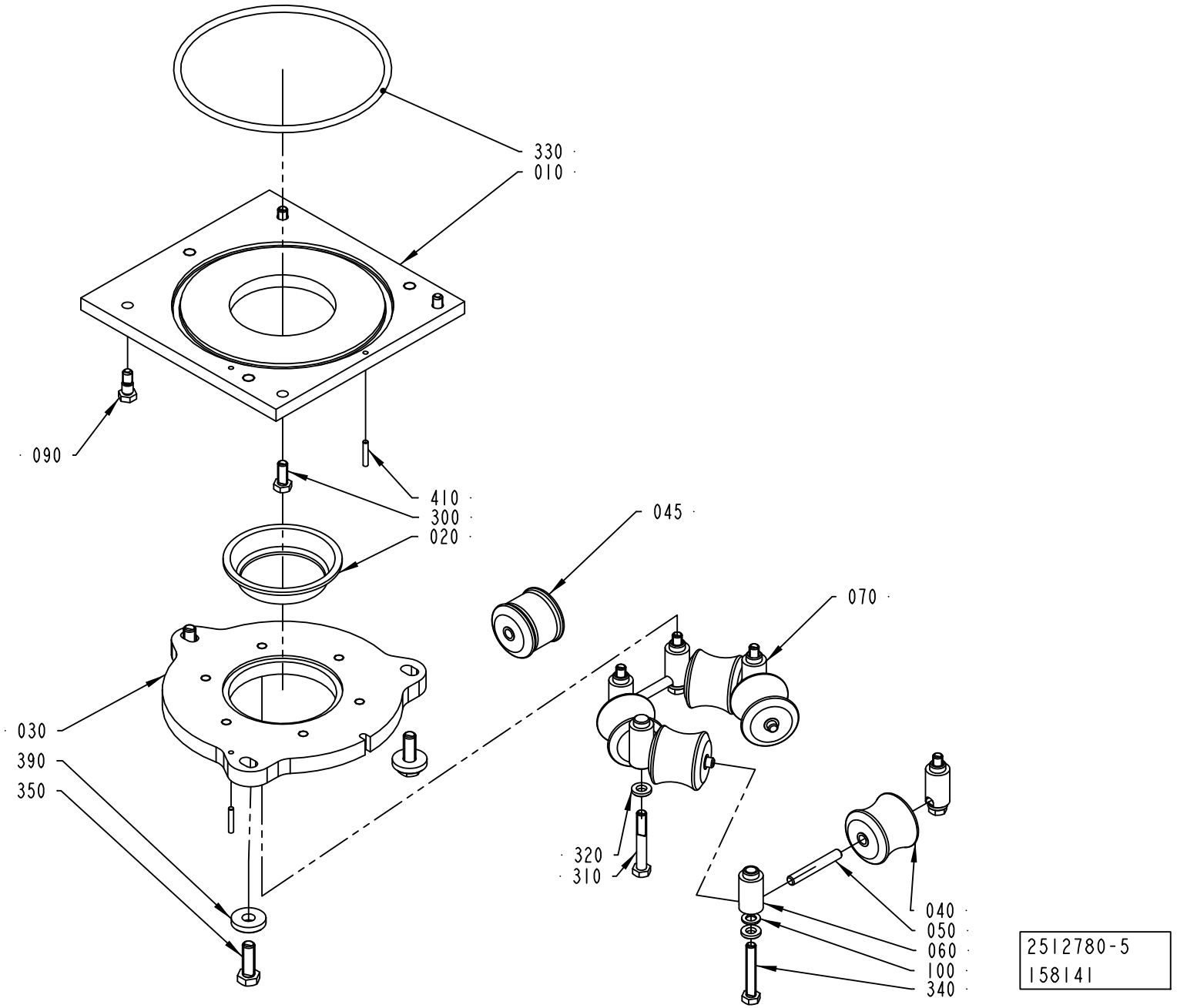
330
010
090
410
300
020
045
070
030
390
350
320
310
040
050
060
100
340
2512780-5
158141

Pos	Part No	UN	Qty	Description	Page No
TPA 0500SQ (Cont'd) (See drawing on page: 1-118)					
010	2611046-0000		1	PLATE	
020	2718901-0000		1	SEAL	
030	2611047-0000		1	RING	
040	2552655-0000		5	ROLLER	
045	2552656-0000		1	ROLLER	
050	263655-0007		6	SHAFT	
060	1036954-0000		4	AXLE SUPPORT	
070	1036955-0000		2	AXLE SUPPORT	
100	1129431-0000		4	WASHER	
310	312105-0462		2	SCREW M6S ISO 4014 M8X55 A480	
320	315115-0165		6	WASHER PLAIN, TBRB 8,4/16 H=3	
340	312109-0461		4	SCREW M6S ISO 4017 M8X50 A480	
350	312105-0495		3	SCREW M6S ISO 4017 M10X30 A480	
390	315125-0173		3	WASHER TBRSB 10,5X28X6 A4	
410	311103-1274		2	PARALLEL PIN ISO 2338 4M6X24 A1	
TPA 1000SQ, TPA 0750SQ (See drawing on page: 1-116)					
010	2559103-0000		1	PLATE	
020	1524414-0000		1	SEAL	
030	2559102-0000		1	RING	
040	1524416-0000		6	ROLLER	
050	263655-0007		6	SHAFT	
060	1036954-0000		4	AXLE SUPPORT	
070	1036955-0000		2	AXLE SUPPORT	
100	1129431-0000		4	WASHER	
310	312105-0462		2	SCREW M6S ISO 4014 M8X55 A480	
320	315115-0165		6	WASHER PLAIN, TBRB 8,4/16 H=3	
340	312109-0461		4	SCREW M6S ISO 4017 M8X50 A480	
350	312105-0495		3	SCREW M6S ISO 4017 M10X30 A480	
390	315125-0173		3	WASHER TBRSB 10,5X28X6 A4	
410	311103-1274		2	PARALLEL PIN ISO 2338 4M6X24 A1	
Common Parts					
090	1037885-0000		2	REAMED BOLT	
300	312105-0451		2	SCREW M6S ISO 4017 M8X20 A480	
330	315204-0324		1	O-RING 164,3X5,7 MM	

Pos	Part No	UN	Qty	Description	Page No

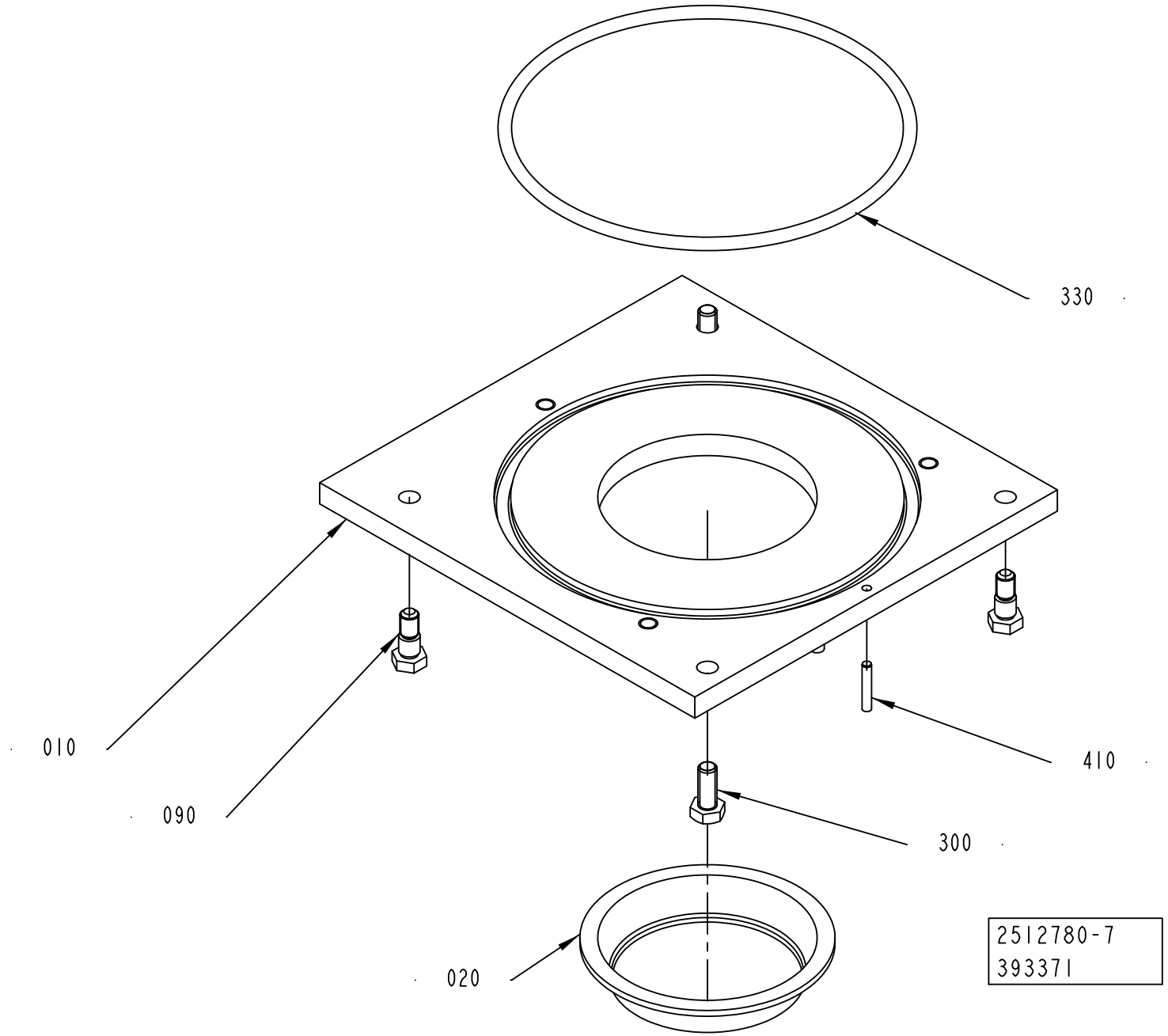
330
010
090
410
300
020
2512780-7
393371

ECM: 395616 - 20090522
Group number: 2512780-0100
Assembly Drawing: 2512780-7_1_AB

This list covers pages from 1-116 to 1-121

Pos	Part No	UN	Qty	Description	Page No
SEE PREVIOUS LISTS PAGES: 1-117, 1-119.					

Pos	Part No	UN	Qty	Description	Page No

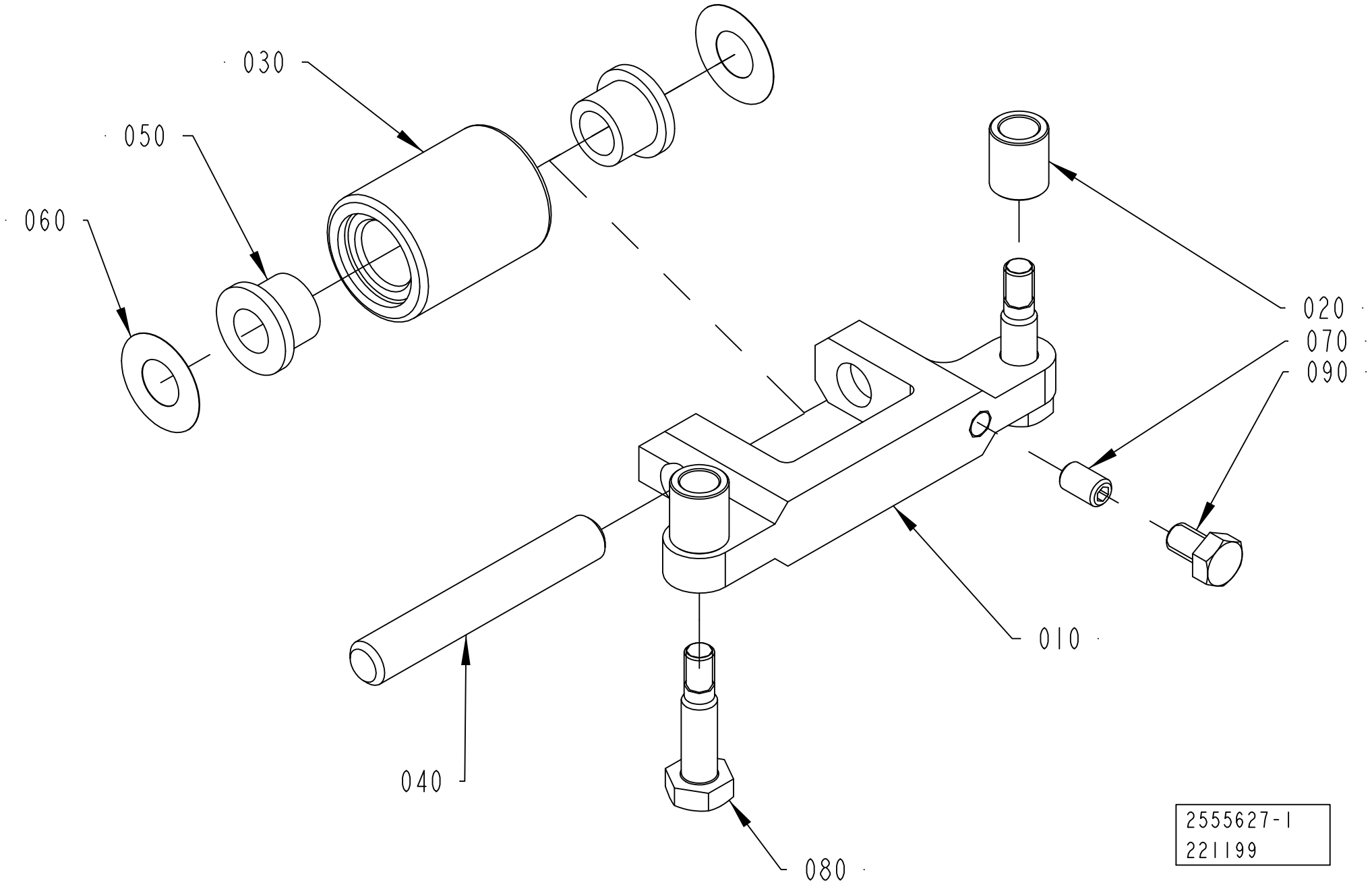
030
050
060
020
070
090
010
040
080
2555627-1
221199

ECM: 344004 - 20080402
Group number: 2555627-0100
Assembly Drawing: 2555627-1_1_AB

Pos	Part No	UN	Qty	Description	Page No
A3/FLEX TBA 0500B, A3/FLEX TBA 1000B					
010	2764009-0000		1	BRACKET	
020	2715649-0005		2	SPACER	
030	2826410-0000		1	ROLLER	
080	2715650-0003		2	SCREW	
A3/FLEX TBA 1000SQ					
010	2659361-0000		1	BRACKET	
020	2715649-0008		2	SPACER	
030	2715570-0000		1	ROLLER	
080	2715650-0005		2	SCREW	
A3/FLEX TBA 1890S, A3/FLEX TBA 2000S, A3/FLEX TBA 1400B					
010	2594596-0000		1	BRACKET	
020	2715649-0004		2	SPACER	
030	2657925-0000		1	ROLLER	
080	2715650-0002		2	SCREW	
A3/FLEX TPA 1000SQ, A3/FLEX TPA 0750SQ					
010	2715567-0000		1	BRACKET	
020	2715649-0005		2	SPACER	
030	2715570-0000		1	ROLLER	
080	2715650-0006		2	SCREW	
Common Parts					
040	2522213-0015		1	SHAFT	
050	90240-0172		2	FLANGE BUSHING, 8X12X10 MM	
060	2033-0011		2	WASHER	
070	312318-0323		1	SCREW ISO4029 M5X8 A4	
090	312105-0323		1	SCREW M6S ISO 4017 M5X8 A480	

Pos	Part No	UN	Qty	Description	Page No

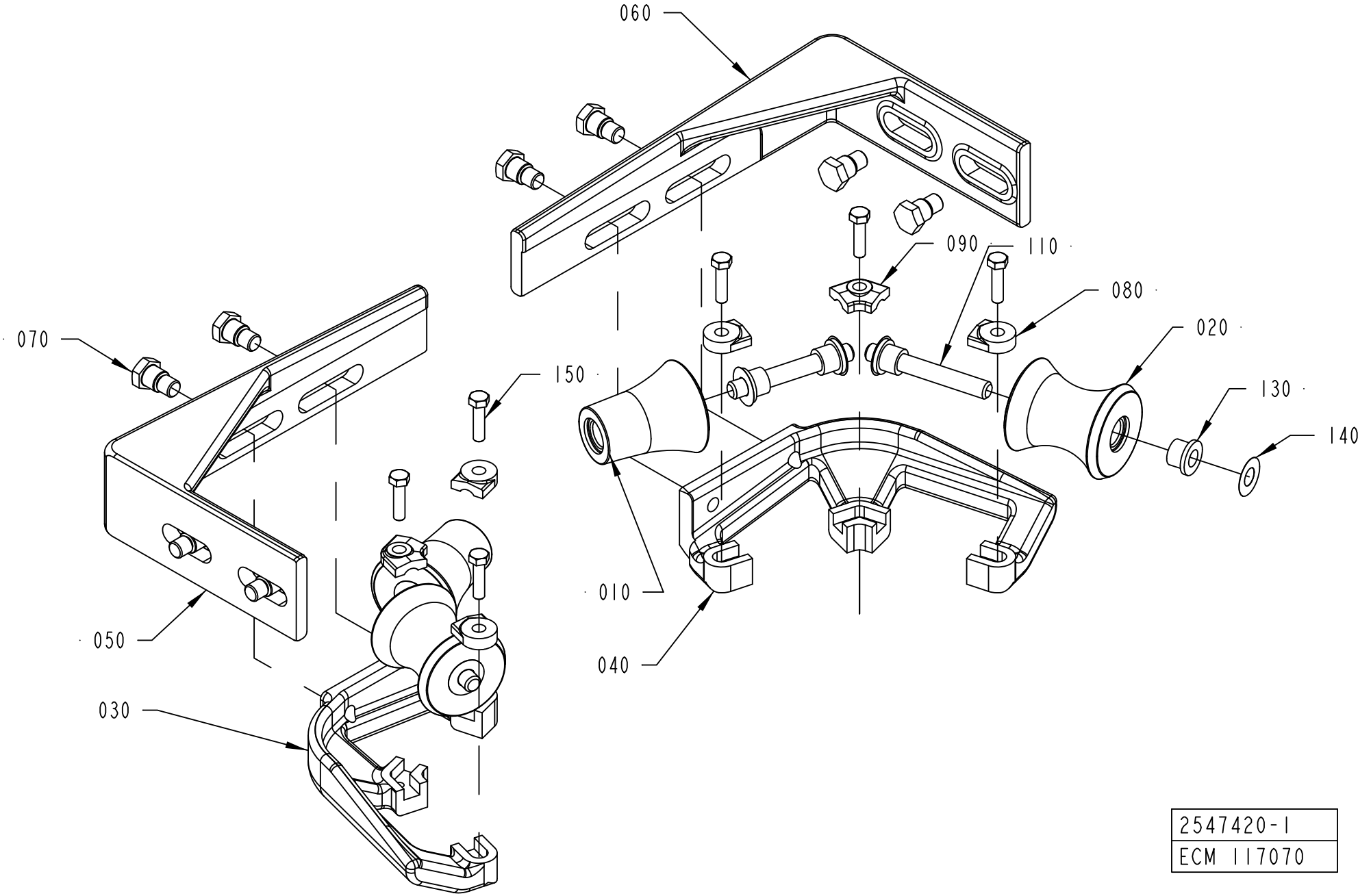

2547420-1
ECM 117070

ECM: 316087 - 20071001
Group number: 2547420-0100
Assembly Drawing: 2547420-1_1_AA

This list covers pages from 1-124 to 1-129

Pos	Part No	UN	Qty	Description	Page No
TBA 0200S (See drawing on page: 1-128)					
010	2651790-0000		2	ROLLER	
020	2651789-0000		2	ROLLER	
030	2552140-0000		1	BRACKET	
040	2552141-0000		1	BRACKET	
050	2803221-0000		1	BRACKET	
060	2803220-0000		1	BRACKET	
070	2552158-0000		4	SCREW	
080	2532895-0008		4	LOCK PLATE	
090	2528123-0006		2	LOCK PLATE	
110	752186-0016		4	SHAFT	
130	90240-0172		8	FLANGE BUSHING, 8X12X10 MM	
140	2033-0011		8	WASHER	
150	312105-0331		6	SCREW M6S ISO 4017 M5X20 A480	
230	312105-0455		4	SCREW M6S ISO 4017 M8X30 A480	
240	315105-0165		4	WASHER BRB 8,4X16 RFR	
250	312605-0318		4	HEXAGON NUT, M6M M8 A280	
TBA 0500B, TBA 1000B (See drawing on page: 1-124)					
010	2651790-0000		2	ROLLER	
020	2651789-0000		2	ROLLER	
030	2552140-0000		1	BRACKET	
040	2552141-0000		1	BRACKET	
050	2552142-0000		1	BRACKET	
060	2552143-0000		1	BRACKET	
070	2552158-0000		8	SCREW	
080	2532895-0008		4	LOCK PLATE	
090	2528123-0006		2	LOCK PLATE	
110	752186-0016		4	SHAFT	
130	90240-0172		8	FLANGE BUSHING, 8X12X10 MM	
140	2033-0011		8	WASHER	
150	312105-0331		6	SCREW M6S ISO 4017 M5X20 A480	
TBA 1000S, TBA 1500S (See drawing on page: 1-124)					
010	2552144-0000		2	ROLL	
020	2562664-0000		2	ROLL	
030	2552140-0000		1	BRACKET	
040	2552141-0000		1	BRACKET	
050	2552142-0000		1	BRACKET	
060	2552143-0000		1	BRACKET	
070	2552158-0000		8	SCREW	
080	2532895-0008		4	LOCK PLATE	
090	2528123-0006		2	LOCK PLATE	
110	752186-0016		4	SHAFT	
130	90240-0172		8	FLANGE BUSHING, 8X12X10 MM	
140	2033-0011		8	WASHER	
150	312105-0331		6	SCREW M6S ISO 4017 M5X20 A480	
TBA 1000SQ (See drawing on page: 1-124)					
010	2552155-0000		2	ROLL	
020	2562684-0000		2	ROLL	
030	2552140-0000		1	BRACKET	
040	2552141-0000		1	BRACKET	
050	2552142-0000		1	BRACKET	
060	2552143-0000		1	BRACKET	
070	2552158-0000		8	SCREW	
080	2532895-0008		4	LOCK PLATE	
090	2528123-0006		2	LOCK PLATE	
110	752186-0016		4	SHAFT	
130	90240-0172		8	FLANGE BUSHING, 8X12X10 MM	
140	2033-0011		8	WASHER	
150	312105-0331		6	SCREW M6S ISO 4017 M5X20 A480	
TBA 1890S, TBA 2000S, TBA 1400B (See drawing on page: 1-126)					
010	2601269-0000		1	ROLLER	
015	2601272-0000		2	ROLLER	
020	2601271-0000		2	ROLLER	
025	2601273-0000		2	ROLLER	
050	2634930-0000		1	SUPPORT ROLLER	
060	2634931-0000		2	BRACKET	
080	2532895-0004		2	LOCK PLATE	
090	2562667-0002		6	LOCK PLATE	
100	2522213-0016		1	SHAFT	
110	2522213-0015		4	SHAFT	
120	2522213-0017		2	SHAFT	
130	90240-0172		14	FLANGE BUSHING, 8X12X10 MM	
140	2033-0011		14	WASHER	
150	312105-0329		8	SCREW M6S ISO 4017 M5X16 A480	
160	312105-0368		4	SCREW M6S ISO 4017 M6X16 A480	
170	312105-0370		4	SCREW M6S ISO 4017 M6X20 A480	
180	90005-0060		4	WASHER PLAIN, RBS 6,4/M6)/18,H=1,5	
190	311103-0353		2	PARALLEL PIN ISO 2338 6M6X20 A1	
TPA 1000SQ, TPA 0750SQ (See drawing on page: 1-124)					
010	2562694-0000		2	ROLLER	
020	2562695-0000		2	ROLLER	
030	2562696-0000		1	BRACKET	
040	2562697-0000		1	BRACKET	
050	2562692-0000		1	BRACKET	

Machine Type | Group Description | Used-In | Group Number | Page No

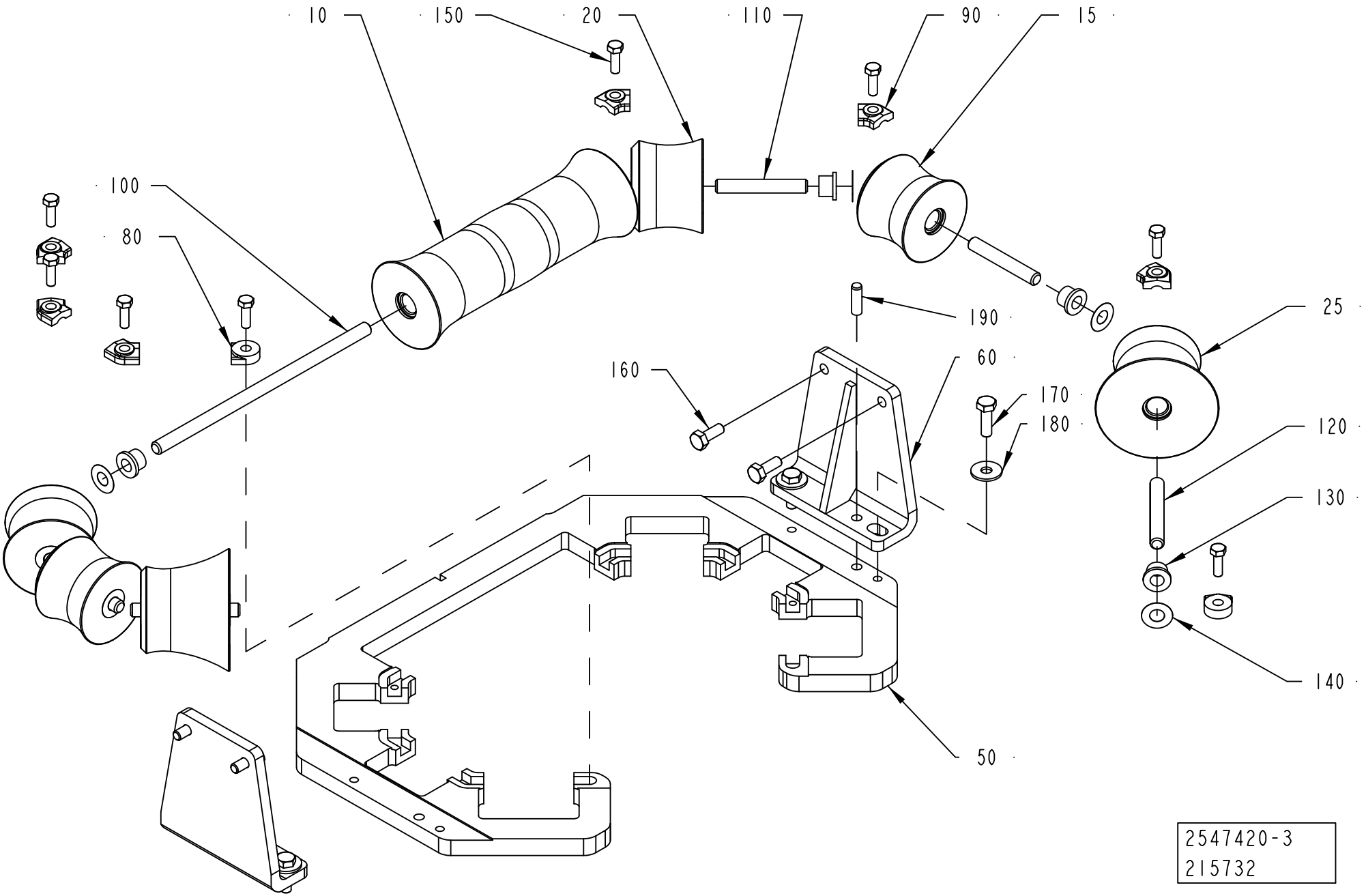
10
150
20
110
90
15
100
80
190
25
60
160
170
180
120
130
140
50
2547420-3
215732

Pos	Part No	UN	Qty	Description	Page No
TPA 1000SQ, TPA 0750SQ (Cont'd) (See drawing on page: 1-124)					
060	2562693-0000		1	BRACKET	
070	2552158-0000		8	SCREW	
080	2532895-0008		4	LOCK PLATE	
090	2528123-0009		2	LOCK PLATE	
110	752186-0016		4	SHAFT	
130	90240-0172		8	FLANGE BUSHING, 8X12X10 MM	
140	2033-0011		8	WASHER	
150	312105-0331		6	SCREW M6S ISO 4017 M5X20 A480	

Pos	Part No	UN	Qty	Description	Page No

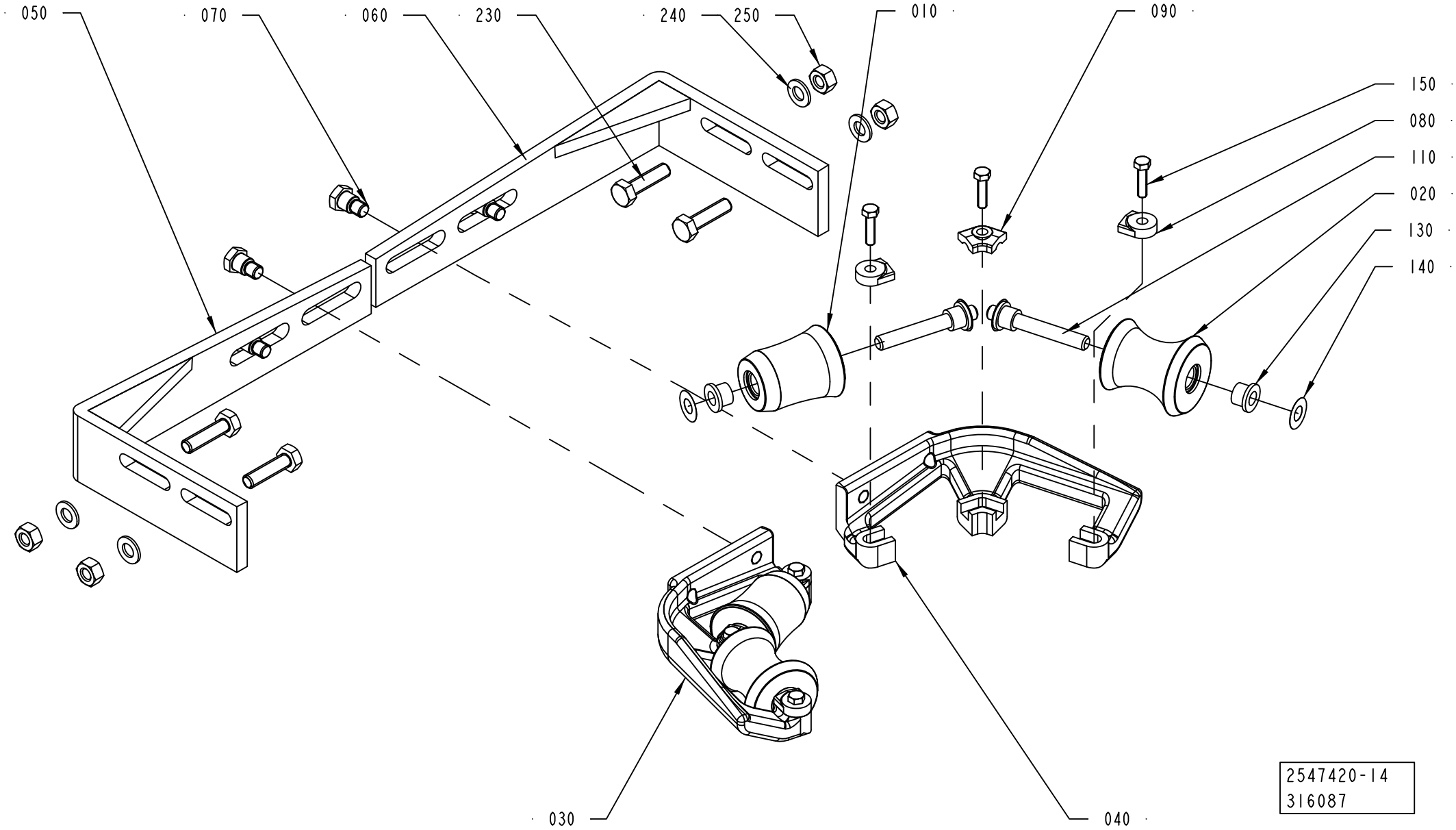
050
070
060
230
240
250
010
090
150
080
110
020
130
140
030
040
2547420-14
316087

ECM: 316087 - 20071001
Group number: 2547420-0100
Assembly Drawing: 2547420-14_1_AA

This list covers pages from 1-124 to 1-129

Pos	Part No	UN	Qty	Description	Page No	Pos	Part No	UN	Qty	Description	Page No

SEE PREVIOUS LISTS PAGES: 1-125, 1-127.

DRYING CHAMBER

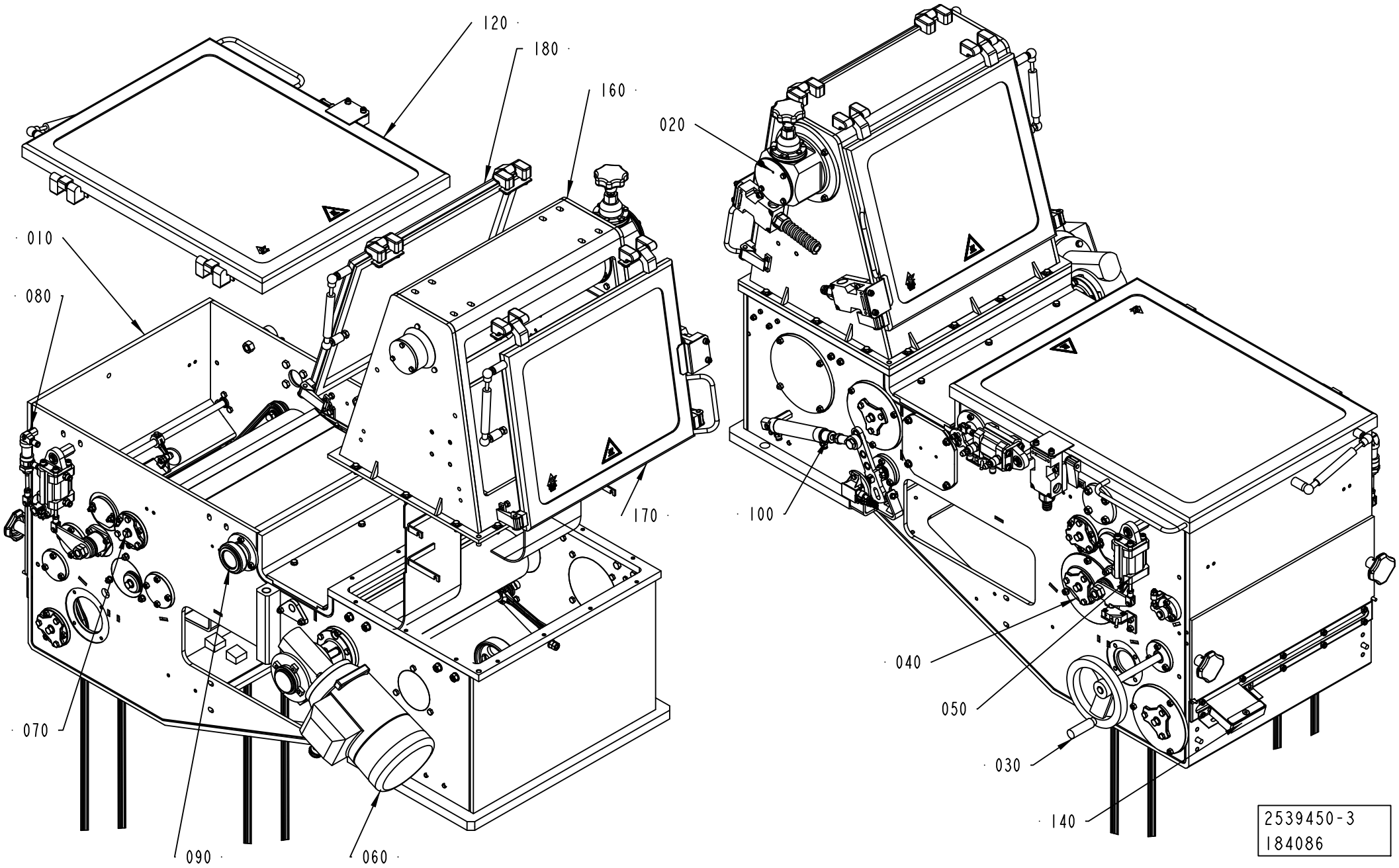

Pos	Part No	UN	Qty	Description	Page No
A3/FLEX DIMC/FLEX (See drawing on page: 1-132)					
020	1558522-0100		1	ADJUSTING ROLLER	**1-135, 1-137**
110	2528146-0150		1	DOOR	**1-139**
140	1528746-0100		1	GUIDE	**1-141**
150	2528101-0100		1	BLOWING SYSTEM	**1-143, 1-145**
A3/FLEX NODIMC NOPT (See drawing on page: 1-132)					
020	1558522-0100		1	ADJUSTING ROLLER	**1-135, 1-137**
110	2528146-0150		1	DOOR	**1-139**
A3/FLEX TBA 0200S NODIMC PT/FLEX, A3/FLEX TBA 0330S NODIMC PT/FLEX, A3/FLEX TBA 0500S NODIMC PT/FLEX, A3/FLEX TBA 0200B NODIMC PT/FLEX, A3/FLEX TBA 0500B NODIMC PT/FLEX, A3/FLEX TBA 0250B NODIMC PT/FLEX, A3/FLEX TBA 1000B NODIMC PT/FLEX, A3/FLEX TBA 1000SQ NODIMC PT/FLEX, A3/FLEX TPA 1000SQ NODIMC PT/FLEX, A3/FLEX TBA 1500S NODIMC PT/FLEX, A3/FLEX TBA 1000S NODIMC PT/FLEX, A3/FLEX TPA 0500SQ NODIMC PT/FLEX, A3/FLEX TPA 0330SQ NODIMC PT/FLEX, A3/FLEX TBA 0250S NODIMC PT/FLEX, A3/FLEX TBA 0200M NODIMC PT/FLEX, A3/FLEX TBA 0200SQ NODIMC PT/FLEX, A3/FLEX TBA 0250SQ NODIMC PT/FLEX, A3/FLEX TPA 0200SQ NODIMC PT/FLEX, A3/FLEX TPA 0250SQ NODIMC PT/FLEX, A3/FLEX TBA 0500SQ NODIMC PT/FLEX, A3/FLEX TPA 0750SQ PT/FLEX NODIMC (See drawing on page: 1-132)					
020	1558522-0100		1	ADJUSTING ROLLER	**1-135, 1-137**
110	2528146-0150		1	DOOR	**1-139**
140	1528746-0100		1	GUIDE	**1-141**
A3/FLEX TBA 2000S NODIMC PT/FLEX, A3/FLEX TBA 1890S NODIMC PT/FLEX, A3/FLEX TBA 1400B NODIMC PT/FLEX (See drawing on page: 1-130)					
020	1558522-0100		1	ADJUSTING ROLLER	**1-135, 1-137**
140	1528746-0100		1	GUIDE	**1-141**
160	2531043-0100		1	HOUSING	**1-149**
170	2531039-0150		1	DOOR	**1-151**
180	2528145-0150		1	DOOR	**1-153**
Common Parts					
010	2531047-0200		1	HOUSING	**1-155, 1-157, 1-159**
030	1549573-0100		1	CRANK	**1-165, 1-167, 1-169**
040	2541635-0200		1	SQUEE-GEE ROLLER	**1-171, 1-173**
050	1548892-0100		1	CALENDER ROLLER	**1-175, 1-177, 1-179**
060	3006270-0100		1	DRIVE ROLLER	**1-181, 1-183**
070	1548736-0200		1	BENDING ROLLER	**1-185, 1-187, 1-189**
080	2539455-0100		1	VALVE	**1-191**
090	2532934-0100		1	AIR KNIFE	**1-193, 1-195, 1-197**
100	2539445-0200		1	PENDULUM ROLLER	**1-199**
120	1539746-0250		1	DOOR	**1-201**

Pos	Part No	UN	Qty	Description	Page No

DRYING CHAMBER

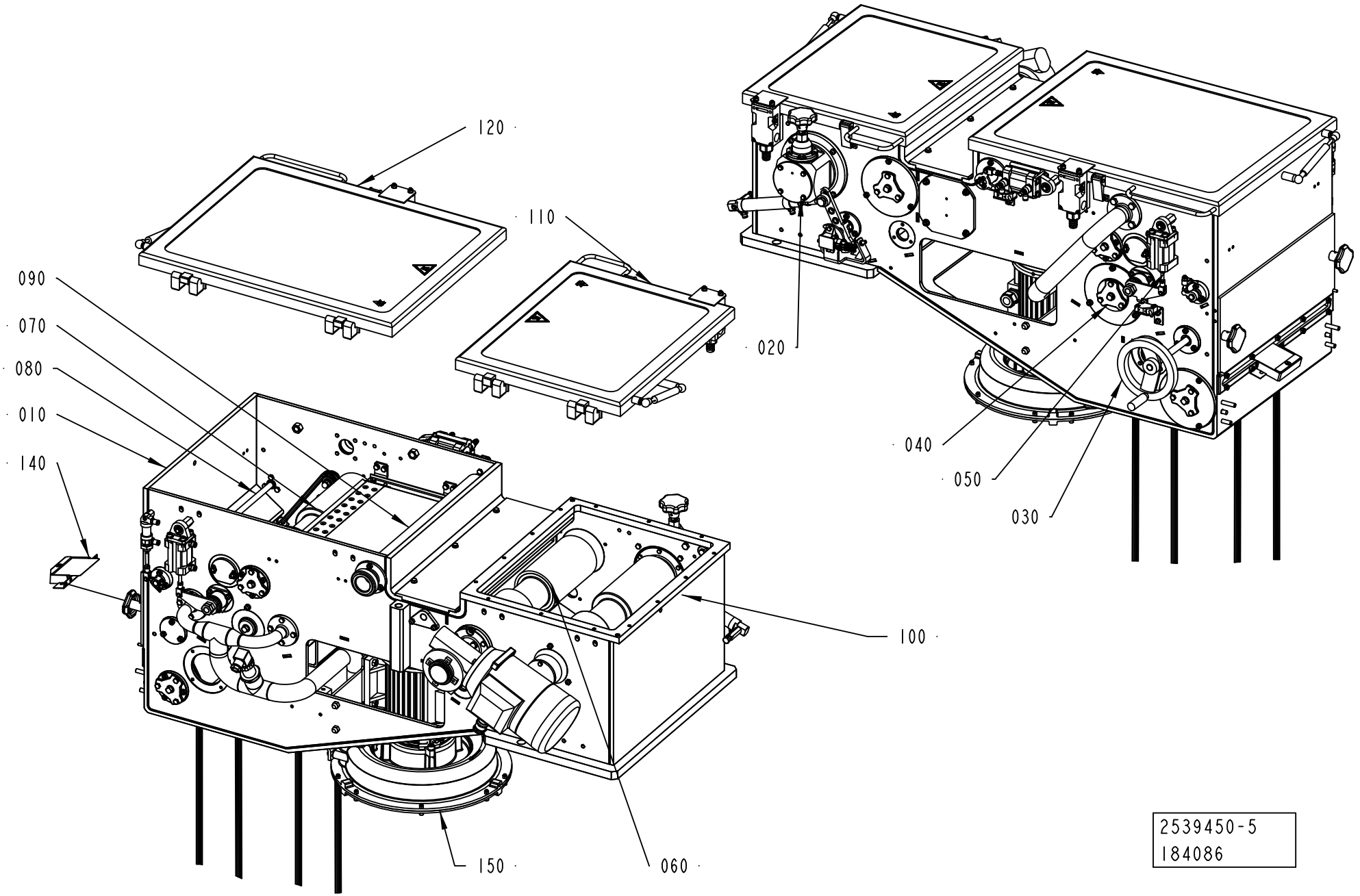

Pos	Part No	UN	Qty	Description	Page No
A3/FLEX DIMC/FLEX (See drawing on page: 1-132)					
020	1558522-0100		1	ADJUSTING ROLLER	**1-135, 1-137**
110	2528146-0150		1	DOOR	**1-139**
140	1528746-0100		1	GUIDE	**1-141**
150	2528101-0100		1	BLOWING SYSTEM	**1-143, 1-145**
A3/FLEX NODIMC NOPT (See drawing on page: 1-132)					
020	1558522-0100		1	ADJUSTING ROLLER	**1-135, 1-137**
110	2528146-0150		1	DOOR	**1-139**
A3/FLEX TBA 0200S NODIMC PT/FLEX, A3/FLEX TBA 0330S NODIMC PT/FLEX, A3/FLEX TBA 0500S NODIMC PT/FLEX, A3/FLEX TBA 0200B NODIMC PT/FLEX, A3/FLEX TBA 0500B NODIMC PT/FLEX, A3/FLEX TBA 0250B NODIMC PT/FLEX, A3/FLEX TBA 1000B NODIMC PT/FLEX, A3/FLEX TBA 1000SQ NODIMC PT/FLEX, A3/FLEX TPA 1000SQ NODIMC PT/FLEX, A3/FLEX TBA 1500S NODIMC PT/FLEX, A3/FLEX TBA 1000S NODIMC PT/FLEX, A3/FLEX TPA 0500SQ NODIMC PT/FLEX, A3/FLEX TPA 0330SQ NODIMC PT/FLEX, A3/FLEX TBA 0250S NODIMC PT/FLEX, A3/FLEX TBA 0200M NODIMC PT/FLEX, A3/FLEX TBA 0200SQ NODIMC PT/FLEX, A3/FLEX TBA 0250SQ NODIMC PT/FLEX, A3/FLEX TPA 0200SQ NODIMC PT/FLEX, A3/FLEX TPA 0250SQ NODIMC PT/FLEX, A3/FLEX TBA 0500SQ NODIMC PT/FLEX, A3/FLEX TPA 0750SQ PT/FLEX NODIMC (See drawing on page: 1-132)					
020	1558522-0100		1	ADJUSTING ROLLER	**1-135, 1-137**
110	2528146-0150		1	DOOR	**1-139**
140	1528746-0100		1	GUIDE	**1-141**
A3/FLEX TBA 2000S NODIMC PT/FLEX, A3/FLEX TBA 1890S NODIMC PT/FLEX, A3/FLEX TBA 1400B NODIMC PT/FLEX (See drawing on page: 1-130)					
020	1558522-0100		1	ADJUSTING ROLLER	**1-135, 1-137**
140	1528746-0100		1	GUIDE	**1-141**
160	2531043-0100		1	HOUSING	**1-149**
170	2531039-0150		1	DOOR	**1-151**
180	2528145-0150		1	DOOR	**1-153**
Common Parts					
010	2531047-0200		1	HOUSING	**1-155, 1-157, 1-159**
030	1549573-0100		1	CRANK	**1-165, 1-167, 1-169**
040	2541635-0200		1	SQUEE-GEE ROLLER	**1-171, 1-173**
050	1548892-0100		1	CALENDER ROLLER	**1-175, 1-177, 1-179**
060	3006270-0100		1	DRIVE ROLLER	**1-181, 1-183**
070	1548736-0200		1	BENDING ROLLER	**1-185, 1-187, 1-189**
080	2539455-0100		1	VALVE	**1-191**
090	2532934-0100		1	AIR KNIFE	**1-193, 1-195, 1-197**
100	2539445-0200		1	PENDULUM ROLLER	**1-199**
120	1539746-0250		1	DOOR	**1-201**

Pos	Part No	UN	Qty	Description	Page No

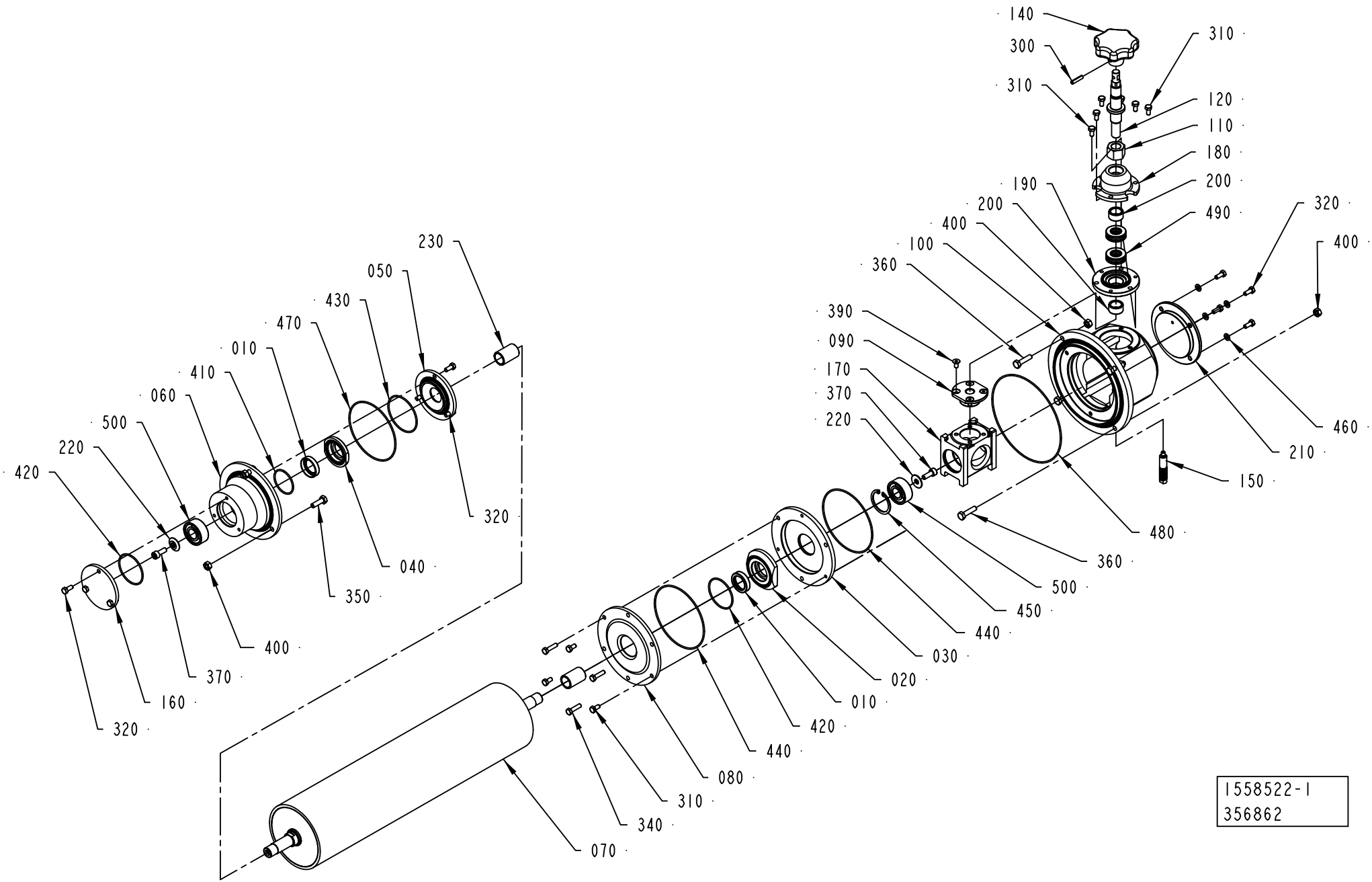
140
300
310
310
120
110
180
200
490
190
200
400
100
360
390
090
170
370
220
320
400
460
210
150
480
360
500
450
440
030
020
010
420
440
080
310
340
070
230
050
430
470
010
410
060
500
220
420
320
040
350
400
370
160
320
1558522-1
356862

ECM: 361624 - 20081002
Group number: 1558522-0100
Assembly Drawing: 1558522-1_1_AD

This list covers pages from 1-134 to 1-137

Pos	Part No	UN	Qty	Description	Page No
A3/FLEX DIMC/FLEX (See drawing on page: 1-136)					
070	2550893-0000		1	BENDING ROLLER	
A3/FLEX TBA 2000S NODIMC, A3/FLEX TBA 1890S NODIMC, A3/FLEX TBA 1400B NODIMC (See drawing on page: 1-134)					
070	2601237-0000		1	BENDING ROLLER	
A3/FLEX TPA 500SQ LIGHTCAP (See drawing on page: 1-136)					
070	2951498-0000		1	ROLLER	
A3/FLEX TBA 0200S NODIMC, A3/FLEX TBA 1000SQ NODIMC, A3/FLEX TBA 1000S NODIMC, A3/FLEX TBA 1000B NODIMC, A3/FLEX TBA 0500B NODIMC, A3/FLEX TPA 1000SQ NODIMC, A3/FLEX TBA 1500S NODIMC, A3/FLEX TBA 0200B NODIMC, A3/FLEX TBA 0250B NODIMC, A3/FLEX TBA 0330S NODIMC, A3/FLEX TPA 0330SQ NODIMC, A3/FLEX TPA 0500SQ NODIMC, A3/FLEX TBA 0250S NODIMC, A3/FLEX TBA 0200M NODIMC, A3/FLEX TBA 0500S NODIMC, A3/FLEX TPA 0200SQ NODIMC, A3/FLEX TPA 0250SQ NODIMC, A3/FLEX TPA 0750SQ NODIMC, A3/FLEX TBA 0200SQ NODIMC, A3/FLEX TBA 0250SQ NODIMC, A3/FLEX TGA 1000SQ NODIMC, A3/FLEX TBA 0500SQ NODIMC, A3/FLEX TGA 0500SQ NODIMC, A3/FLEX TGA 0750SQ NODIMC (See drawing on page: 1-134)					
070	2550891-0000		1	BENDING ROLLER	
Common Parts					
010	90458-0639		2	VARILIP 20X30X7 MM	
020	1558748-0000		1	FLANGE	
030	1558749-0000		1	FLANGE	
040	1558750-0000		1	FLANGE	
050	1558751-0000		1	FLANGE	
060	1558752-0000		1	FLANGE	
080	1558754-0000		1	LID	
090	1558755-0000		1	FLANGE	
100	1558756-0000		1	HOUSING	
110	1558757-0000		1	NUT	
120	1558758-0000		1	SHAFT	
140	1558760-0000		1	KNOB	
150	1558761-0000		1	SHAFT	
160	1558762-0000		1	LID	
170	1558763-0000		1	SLIDER	
180	1558764-0000		1	FLANGE	
190	1558765-0000		1	FLANGE	
200	1558766-0000		2	BUSHING	
210	2528073-0000		1	LID	
220	1558768-0000		2	WASHER	
230	2555613-0000		2	BUSHING	
300	311112-0256		1	SPRING PIN, ISO 8752 4X20-C	
310	312105-0325		9	SCREW M6S ISO 4017 M5X10 A480	
320	312105-0327		10	SCREW M6S ISO 4017 M5X12 A480	
340	312105-0331		3	SCREW M6S ISO 4017 M5X20 A480	
350	312105-0370		3	SCREW M6S ISO 4017 M6X20 A480	
360	312105-0372		4	SCREW M6S ISO 4017 M6X25 A480	
370	312115-0368		2	SCREW ISO4762 M6X16 A4 80	
390	312155-0325		4	SCREW DIN 7991 MF6S M5X10 A4 70	
400	312605-0316		7	HEXAGON NUT, M6M M6 A280	
410	315205-0716		1	O-RING 34,65X1,78 MM	
420	315205-0803		2	O-RING 44,17X1,78 MM	
430	315205-0805		1	O-RING 53,7X1,78 MM	
440	315205-0807		2	O-RING 94,97X1,78 MM	
450	315753-0124		1	RETAINING RING FOR BORE DIN 472 35 A2	
460	315105-0146		4	WASHER BRB 5,3X10 RFR	
470	90458-0640		1	O-RING 88,62X1,78 MM	
480	90459-0094		1	O-RING 133,07X1,78 MM	
490	90459-0098		2	THRUST BALL BEARING, 15X28X9 MM	
500	90214-0105		2	SPHERICAL BALL BEARING, 15X35X14 MM	

Machine Type	Group Description	Used-In	Group Number	Page No

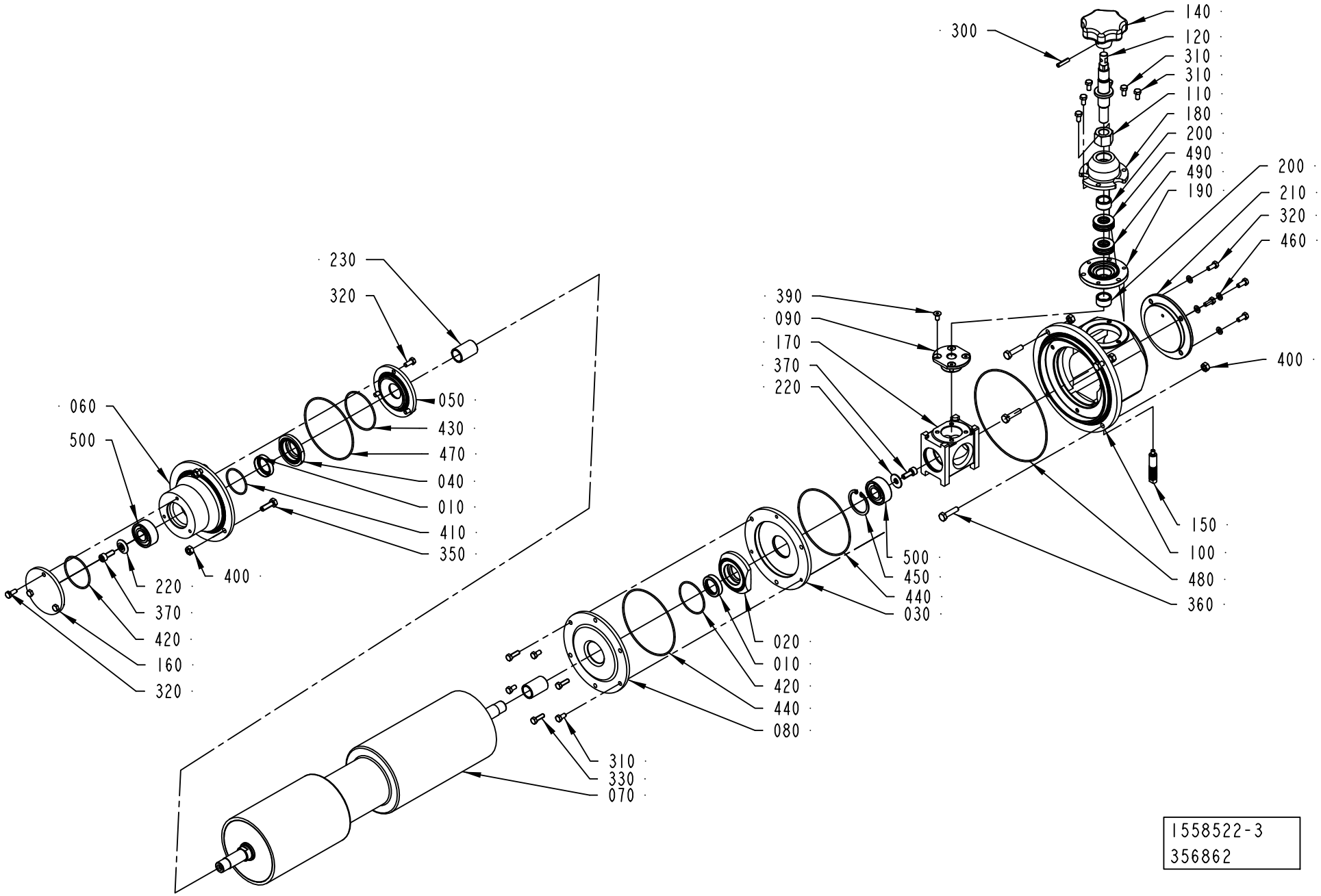
300
140
120
310
310
110
180
200
490
490
190
200
210
320
460
390
090
170
370
220
400
150
100
480
360
500
450
440
030
020
010
420
440
080
310
330
070
230
320
060
500
050
430
470
040
010
410
350
400
220
370
420
160
320
1558522-3
356862

ECM: 361624 - 20081002
Group number: 1558522-0100
Assembly Drawing: 1558522-3_1_AC

This list covers pages from 1-134 to 1-137

Pos	Part No	UN	Qty	Description	Page No
A3/FLEX DIMC/FLEX (See drawing on page: 1-136)					
070	2550893-0000		1	BENDING ROLLER	
A3/FLEX TBA 2000S NODIMC, A3/FLEX TBA 1890S NODIMC, A3/FLEX TBA 1400B NODIMC (See drawing on page: 1-134)					
070	2601237-0000		1	BENDING ROLLER	
A3/FLEX TPA 500SQ LIGHTCAP (See drawing on page: 1-136)					
070	2951498-0000		1	ROLLER	
A3/FLEX TBA 0200S NODIMC, A3/FLEX TBA 1000SQ NODIMC, A3/FLEX TBA 1000S NODIMC, A3/FLEX TBA 1000B NODIMC, A3/FLEX TBA 0500B NODIMC, A3/FLEX TPA 1000SQ NODIMC, A3/FLEX TBA 1500S NODIMC, A3/FLEX TBA 0200B NODIMC, A3/FLEX TBA 0250B NODIMC, A3/FLEX TBA 0330S NODIMC, A3/FLEX TPA 0330SQ NODIMC, A3/FLEX TPA 0500SQ NODIMC, A3/FLEX TBA 0250S NODIMC, A3/FLEX TBA 0200M NODIMC, A3/FLEX TBA 0500S NODIMC, A3/FLEX TPA 0200SQ NODIMC, A3/FLEX TPA 0250SQ NODIMC, A3/FLEX TPA 0750SQ NODIMC, A3/FLEX TBA 0200SQ NODIMC, A3/FLEX TBA 0250SQ NODIMC, A3/FLEX TGA 1000SQ NODIMC, A3/FLEX TBA 0500SQ NODIMC, A3/FLEX TGA 0500SQ NODIMC, A3/FLEX TGA 0750SQ NODIMC (See drawing on page: 1-134)					
070	2550891-0000		1	BENDING ROLLER	
Common Parts					
010	90458-0639		2	VARILIP 20X30X7 MM	
020	1558748-0000		1	FLANGE	
030	1558749-0000		1	FLANGE	
040	1558750-0000		1	FLANGE	
050	1558751-0000		1	FLANGE	
060	1558752-0000		1	FLANGE	
080	1558754-0000		1	LID	
090	1558755-0000		1	FLANGE	
100	1558756-0000		1	HOUSING	
110	1558757-0000		1	NUT	
120	1558758-0000		1	SHAFT	
140	1558760-0000		1	KNOB	
150	1558761-0000		1	SHAFT	
160	1558762-0000		1	LID	
170	1558763-0000		1	SLIDER	
180	1558764-0000		1	FLANGE	
190	1558765-0000		1	FLANGE	
200	1558766-0000		2	BUSHING	
210	2528073-0000		1	LID	
220	1558768-0000		2	WASHER	
230	2555613-0000		2	BUSHING	
300	311112-0256		1	SPRING PIN, ISO 8752 4X20-C	
310	312105-0325		9	SCREW M6S ISO 4017 M5X10 A480	
320	312105-0327		10	SCREW M6S ISO 4017 M5X12 A480	
340	312105-0331		3	SCREW M6S ISO 4017 M5X20 A480	
350	312105-0370		3	SCREW M6S ISO 4017 M6X20 A480	
360	312105-0372		4	SCREW M6S ISO 4017 M6X25 A480	
370	312115-0368		2	SCREW ISO4762 M6X16 A4 80	
390	312155-0325		4	SCREW DIN 7991 MF6S M5X10 A4 70	
400	312605-0316		7	HEXAGON NUT, M6M M6 A280	
410	315205-0716		1	O-RING 34,65X1,78 MM	
420	315205-0803		2	O-RING 44,17X1,78 MM	
430	315205-0805		1	O-RING 53,7X1,78 MM	
440	315205-0807		2	O-RING 94,97X1,78 MM	
450	315753-0124		1	RETAINING RING FOR BORE DIN 472 35 A2	
460	315105-0146		4	WASHER BRB 5,3X10 RFR	
470	90458-0640		1	O-RING 88,62X1,78 MM	
480	90459-0094		1	O-RING 133,07X1,78 MM	
490	90459-0098		2	THRUST BALL BEARING, 15X28X9 MM	
500	90214-0105		2	SPHERICAL BALL BEARING, 15X35X14 MM	

Machine Type	Group Description	Used-In	Group Number	Page No

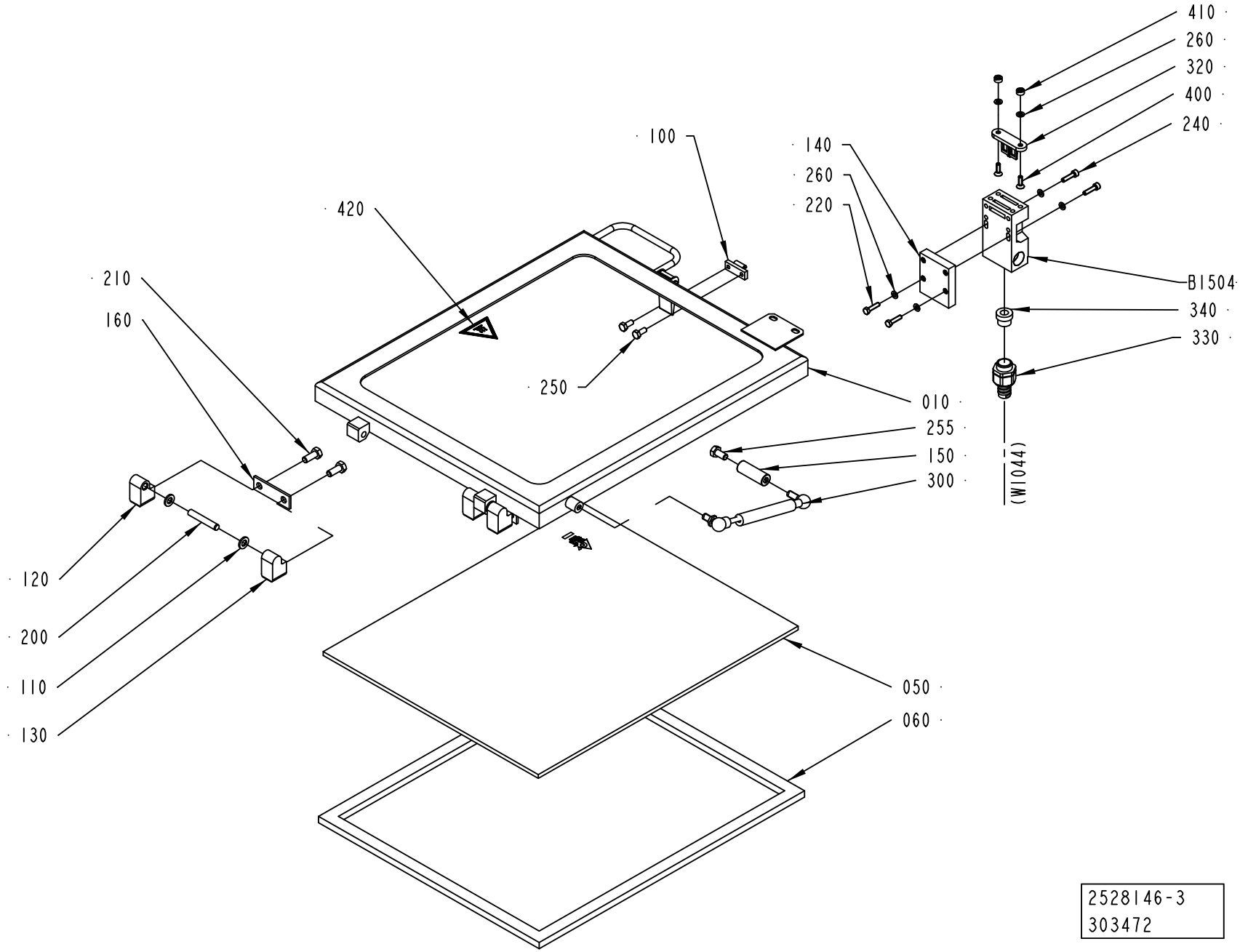
410
260
320
400
240
100
140
260
220
420
B1504
340
330
210
160
250
010
255
150
300
(W1044)
120
200
110
130
050
060
2528146-3
303472

ECM: 304244 - 20070417
Group number: 2528146-0150
Assembly Drawing: 2528146-3_1_AA

Pos	Part No	UN	Qty	Description	Page No
-					
010	2531037-0000		1	FRAME	
050	2874749-0000		1	GLASS PANE	
060	2531045-0000		1	GASKET	
100	271860-0000		1	CLAMP BLOCK	
110	441739-0000		4	WASHER	
120	1041979-0000		2	HINGE FLANGE	
130	1041978-0000		2	HINGE FLANGE	
140	2541651-0000		1	PLATE	
150	1548877-0000		1	SPACER	
160	441737-0000		2	WASHER	
200	311103-0413		2	PARALLEL PIN ISO 2338 8M6X50 A1	
210	312105-0451		4	SCREW M6S ISO 4017 M8X20 A480	
220	312105-0331		2	SCREW M6S ISO 4017 M5X20 A480	
240	312115-0331		2	SCREW ISO4762 M5X20 A4 80	
250	312105-0367		2	SCREW M6S ISO 4017 M6X14 A480	
255	312105-0449		1	SCREW M6S ISO 4017 M8X16 A480	
260	315105-0146		6	WASHER BRB 5,3X10 RFR	
300	90347-0039		1	DAMPER	
320	90044-0310		1	KEY FOR SAFETY SWITCH AZ 15/16 B1	
330	90458-0429		1	HOSE GLAND W/O INSERT M20 EXTENDED	
340	353249-0011		1	INSERT, SINGLE HOLE, EK 153/11	
400	312155-0329		2	SCREW DIN 7991 MF6S M5X16 A4 70	
410	575034-0000		2	ROUND NUT	
420	359705-0007		1	WARNING SIGN ISO, HOT SURFACE	
B1504	90459-0472		1	KEY SAF.SW. AZ 16 02ZVRK-M20-2152-2254	

Pos	Part No	UN	Qty	Description	Page No

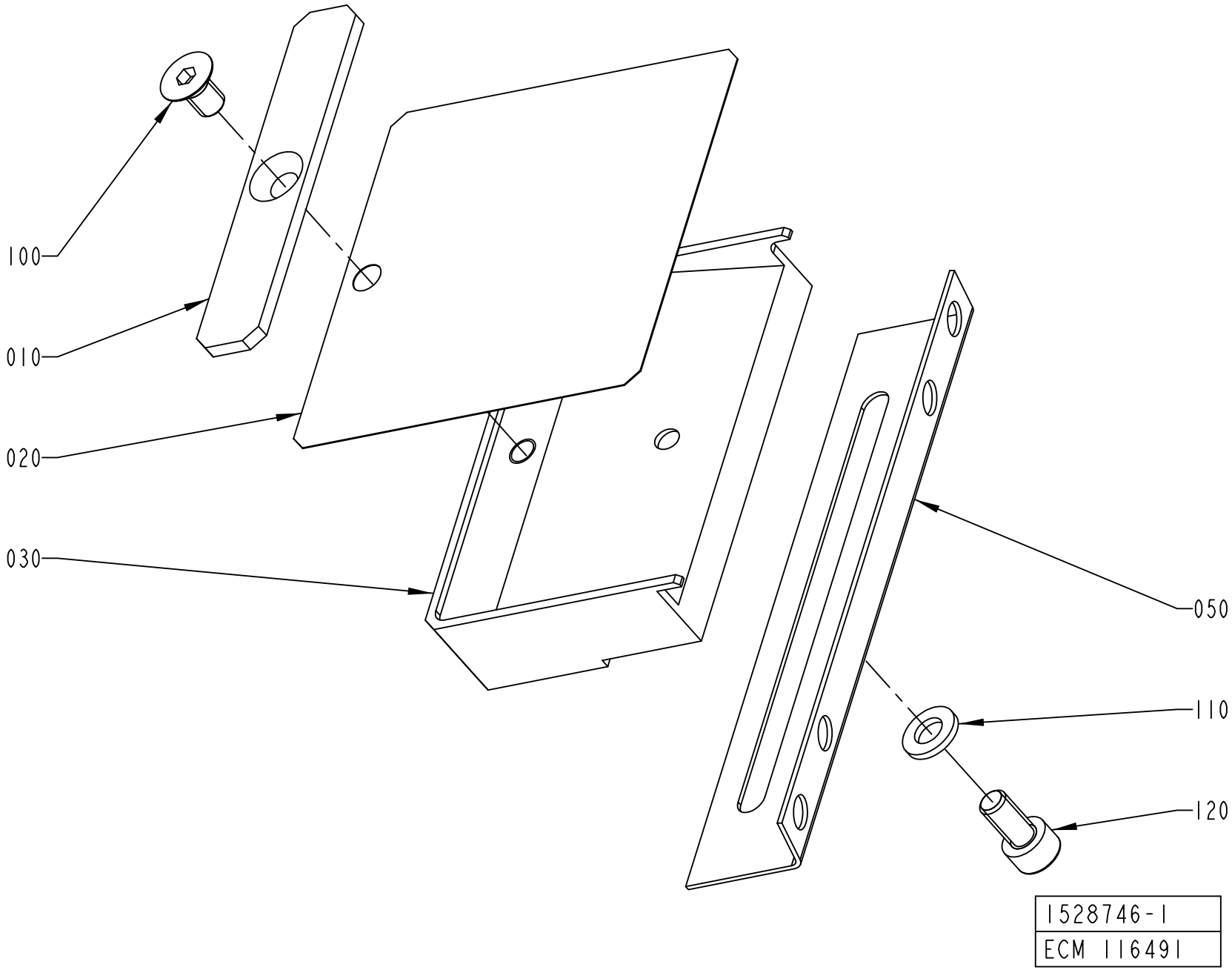
100
010
020
030
050
110
120
1528746-1
ECM 116491

ECM: 326046 - 20080103
Group number: 1528746-0100
Assembly Drawing: 1528746-1_1_AA

Pos	Part No	UN	Qty	Description	Page No
-					
010	1490715-0000		1	DOLLY	
020	1490714-0000		1	GUIDE	
030	1490713-0000		1	SPRING HOLDER	
050	1519799-0000		1	ANGLE BRACKET	
100	312155-0364		1	SCREW DIN 7991 MF6S M6X10 A4 70	
110	315105-0153		1	WASHER BRB 6,4X12 RFR	
120	312115-0366		1	SCREW ISO4762 M6X12 A4 80	

Pos	Part No	UN	Qty	Description	Page No

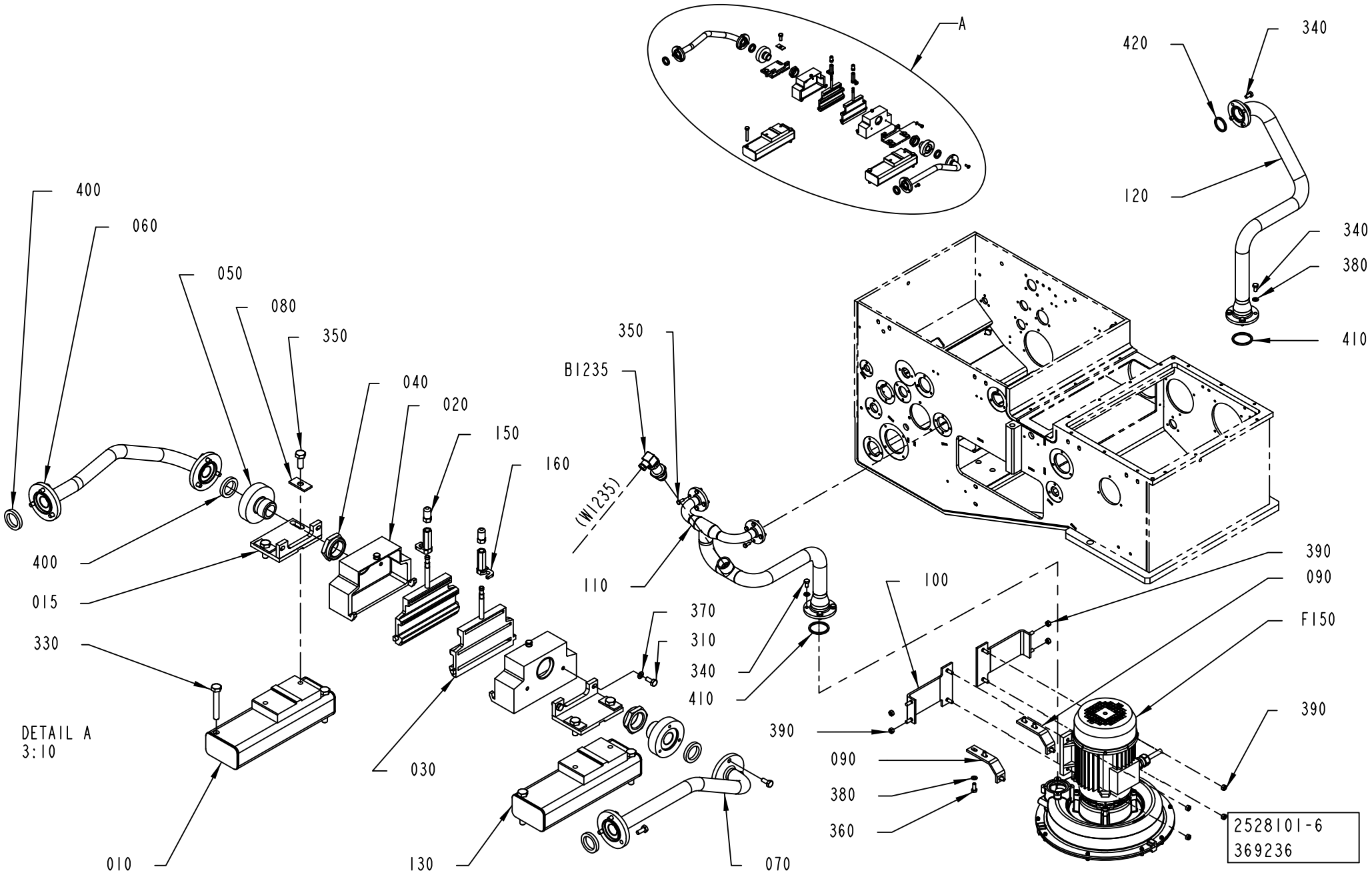
A
420
340
120
340
380
410
400
060
050
080
350
040
020
150
160
B1235
350
(W1235)
110
370
310
340
410
400
015
330
DETAIL A
3:10
010
030
130
070
100
390
090
F150
390
390
090
380
360
2528101-6
369236

ECM: 371275 - 20090101
Group number: 2528101-0100
Assembly Drawing: 2528101-6_1_AB

This list covers pages from 1-142 to 1-145

Pos	Part No	UN	Qty	Description	Page No
A3/FLEX TBA 1000S LIGHTCAP (See drawing on page: 1-144)					
010	2553093-0000		1	PLATE	
030	2921577-0000		2	AIR NOZZLE	
060	2553095-0000		1	PIPE	
070	2553094-0000		1	PIPE	
130	2553092-0000		1	PLATE	
A3/FLEX TBA 1000S STDA7, A3/FLEX TBA 1000B STDA7 (See drawing on page: 1-144)					
010	2553093-0000		1	PLATE	
030	2986689-0000		2	AIR NOZZLE	
060	2553095-0000		1	PIPE	
070	2553094-0000		1	PIPE	
130	2553092-0000		1	PLATE	
A3/FLEX TPA 500SQ LIGHTCAP (See drawing on page: 1-142)					
010	2954989-0000		1	BRACKET	
030	2921577-0000		2	AIR NOZZLE	
060	2954991-0000		1	PIPE	
070	2954990-0000		1	PIPE	
130	2954988-0000		1	BRACKET	
Common Parts					
015	2951055-0000		2	ANGLE HOLDER	
020	2921576-0000		2	AIR DISTRIBUTION BOX	
040	1484969-0000		2	SLEEVE	
050	2616237-0000		2	CONNECTION	
080	2616236-0000		4	WASHER	
090	2616238-0000		2	HOLDER	
100	2616239-0000		2	HOLDER	
110	1523680-0000		1	PIPE	
120	2616240-0000		1	PIPE	
140	2808422-0000		1	FILTER	
150	2921581-0000		2	CAP NUT	
160	2921579-0000		2	HOOK	
310	312105-0289		16	SCREW M6S H4X10 A4 70 ISO4017/DIN933	
330	312105-0381		4	SCREW M6S ISO 4014 M6X55 A480	
340	312105-0449		8	SCREW M6S ISO 4017 M8X16 A480	
350	312105-0368		12	SCREW M6S ISO 4017 M6X16 A480	
360	312105-0451		6	SCREW M6S ISO 4017 M8X20 A480	
370	315105-0136		4	WASHER BRB 4,3X8 RFR	
380	315105-0165		22	WASHER BRB 8,4X16 RFR	
390	312605-0318		8	HEXAGON NUT, M6M M8 A280	
400	315229-0102		4	GASKETS, 16,8X23,8X3,7 MM 3/4" FDA	
410	315229-0105		2	GASKETS, 48,5X55,5X3,7 MM 2" FDA	
420	315229-0104		1	GASKETS, 35,8X42,8X3,7 MM 1"1/2 FD	
430	312605-0316		4	HEXAGON NUT, M6M M6 A280	
440	315105-0153		4	WASHER BRB 6,4X12 RFR	
610	353243-0001		1	HOSE GLAND W/O INSERT PG9 EXTENDED	
620	353249-0009		1	INSERT, SINGLE HOLE, EK 152/9	
B1235	90459-0689		1	PRESSURE TRANSMITTER 0 - 0,6 BAR	
F150	1523691-0100		1	BLOWING DEVICE	**1-147**

Machine Type | Group Description | Used-In | Group Number | Page No

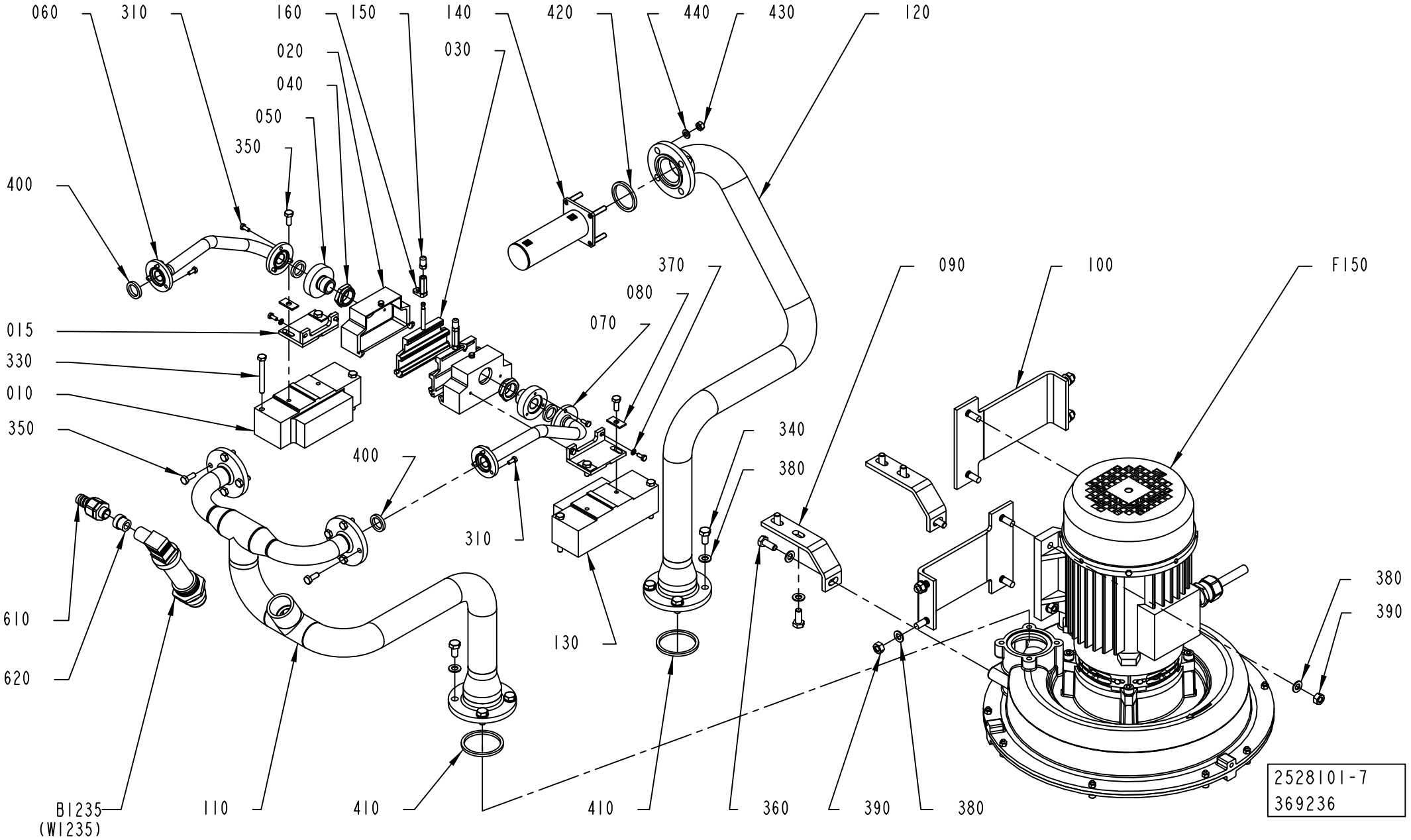
060
310
160
150
140
420
440
430
120
020
030
040
050
350
400
370
090
100
F150
080
070
015
330
010
350
340
380
400
310
130
610
620
380
390
B1235
(W1235)
110
410
410
360
390
380
2528101-7
369236

ECM: 371275 - 20090101
Group number: 2528101-0100
Assembly Drawing: 2528101-7_1_AA

This list covers pages from 1-142 to 1-145

Pos	Part No	UN	Qty	Description	Page No
A3/FLEX TBA 1000S LIGHTCAP (See drawing on page: 1-144)					
010	2553093-0000		1	PLATE	
030	2921577-0000		2	AIR NOZZLE	
060	2553095-0000		1	PIPE	
070	2553094-0000		1	PIPE	
130	2553092-0000		1	PLATE	
A3/FLEX TBA 1000S STDA7, A3/FLEX TBA 1000B STDA7 (See drawing on page: 1-144)					
010	2553093-0000		1	PLATE	
030	2986689-0000		2	AIR NOZZLE	
060	2553095-0000		1	PIPE	
070	2553094-0000		1	PIPE	
130	2553092-0000		1	PLATE	
A3/FLEX TPA 500SQ LIGHTCAP (See drawing on page: 1-142)					
010	2954989-0000		1	BRACKET	
030	2921577-0000		2	AIR NOZZLE	
060	2954991-0000		1	PIPE	
070	2954990-0000		1	PIPE	
130	2954988-0000		1	BRACKET	
Common Parts					
015	2951055-0000		2	ANGLE HOLDER	
020	2921576-0000		2	AIR DISTRIBUTION BOX	
040	1484969-0000		2	SLEEVE	
050	2616237-0000		2	CONNECTION	
080	2616236-0000		4	WASHER	
090	2616238-0000		2	HOLDER	
100	2616239-0000		2	HOLDER	
110	1523680-0000		1	PIPE	
120	2616240-0000		1	PIPE	
140	2808422-0000		1	FILTER	
150	2921581-0000		2	CAP NUT	
160	2921579-0000		2	HOOK	
310	312105-0289		16	SCREW M6S H4X10 A4 70 ISO4017/DIN933	
330	312105-0381		4	SCREW M6S ISO 4014 M6X55 A480	
340	312105-0449		8	SCREW M6S ISO 4017 M8X16 A480	
350	312105-0368		12	SCREW M6S ISO 4017 M6X16 A480	
360	312105-0451		6	SCREW M6S ISO 4017 M8X20 A480	
370	315105-0136		4	WASHER BRB 4,3X8 RFR	
380	315105-0165		22	WASHER BRB 8,4X16 RFR	
390	312605-0318		8	HEXAGON NUT, M6M M8 A280	
400	315229-0102		4	GASKETS, 16,8X23,8X3,7 MM 3/4" FDA	
410	315229-0105		2	GASKETS, 48,5X55,5X3,7 MM 2" FDA	
420	315229-0104		1	GASKETS, 35,8X42,8X3,7 MM 1"1/2 FD	
430	312605-0316		4	HEXAGON NUT, M6M M6 A280	
440	315105-0153		4	WASHER BRB 6,4X12 RFR	
610	353243-0001		1	HOSE GLAND W/O INSERT PG9 EXTENDED	
620	353249-0009		1	INSERT, SINGLE HOLE, EK 152/9	
B1235	90459-0689		1	PRESSURE TRANSMITTER 0 - 0,6 BAR	
F150	1523691-0100		1	BLOWING DEVICE	**1-147**

Machine Type | Group Description | Used-In | Group Number | Page No

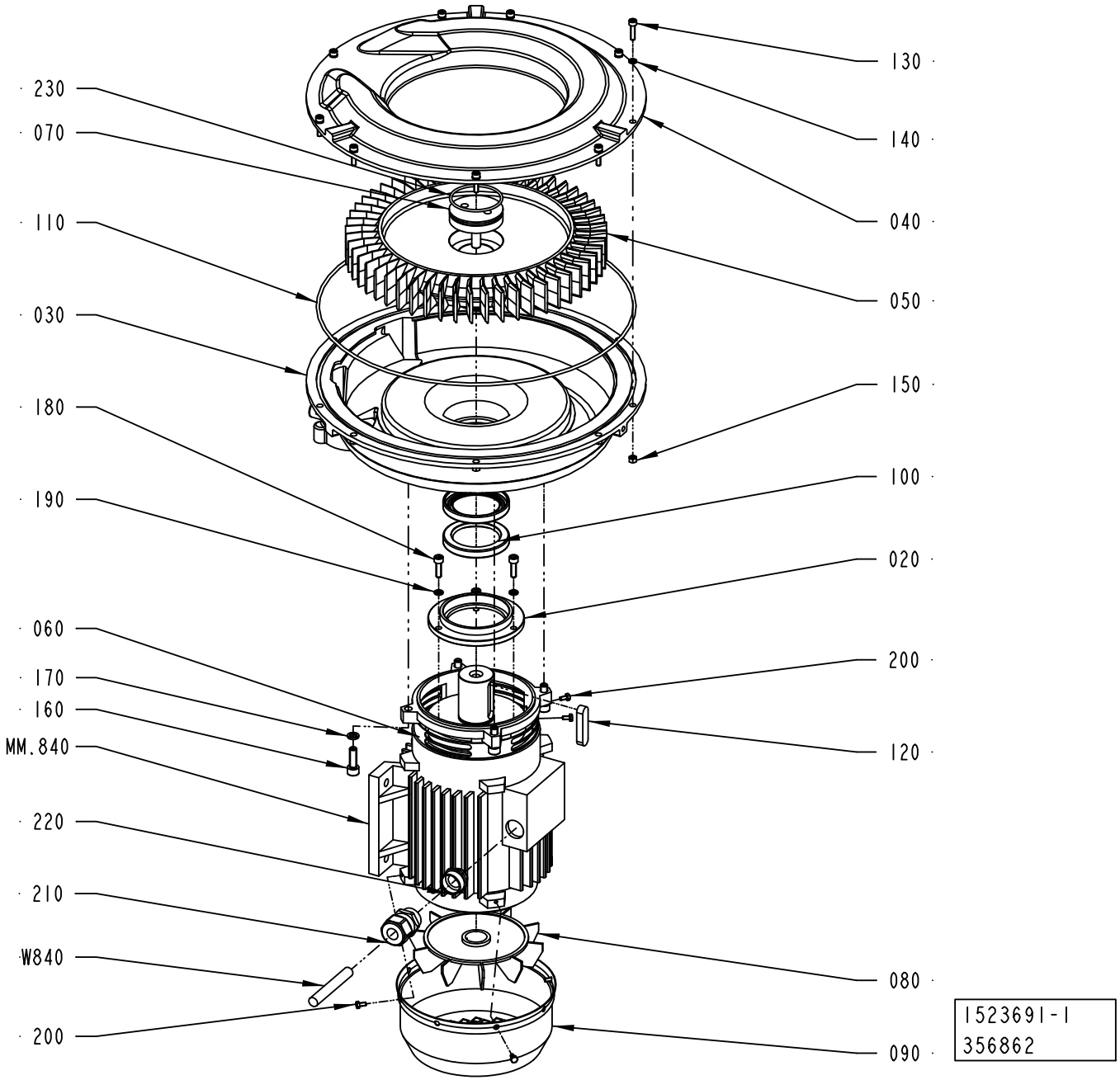
230
070
110
030
180
190
060
170
160
MM.840
220
210
W840
200
130
140
040
050
150
100
020
200
120
080
090
1523691-1
356862

ECM: 359331 - 20081001
Group number: 1523691-0100
Assembly Drawing: 1523691-1_1_AF

Pos	Part No	UN	Qty	Description	Page No
-					
020	2503634-0000		1	BEARING FLANGE	
030	1523687-0000		1	PUMP BODY	
040	1523686-0000		1	LID	
050	1523685-0000		1	IMPELLER	
060	2503635-0000		1	SHIELD	
070	2503636-0000		1	STOP SCREW	
080	2503637-0000		1	FAN	
090	2503638-0000		1	FAN HOUSING	
100	90459-0802		2	RADIAL SEAL 55X75X10 MM	
110	90459-0803		1	O-RING 355,19X3,53 MM	
120	315705-0334		1	PARALLEL KEY W. ROUND ENDS 12X8X50 MM	
130	312115-0331		9	SCREW ISO4762 M5X20 A4 80	
140	90062-0029		9	LOCK WASHER 5,1X 8,6, T= 1,5 DIN 7980	
150	312605-0314		9	HEXAGON NUT, M6M M5 A280	
160	312115-0453		4	SCREW ISO4762 M8X25 A4 80	
170	90062-0031		4	LOCK WASHER 8,2X12,8; T=2 DIN 7980	
180	312115-0370		3	SCREW ISO4762 M6X20 A4 80	
190	90062-0030		3	LOCK WASHER 6,1X9,7; T=1,5 DIN 7980	
200	312105-0287		6	SCREW M6S ISO 4017 M4X8 A470	
210	90458-0440		1	GLAND, EXTENDED WITH INSERT, M25X1,5	
220	90459-2323		1	REDUCER, M25/M20	
230	315202-0739		1	O-RING 55,25X2,62 MM	
MM.840	90459-0804		1	MOTOR B3/B5 CE CODE: 159353	
	90459-3854		*1*	*ANG. BALL BEAR, 45X85X30,2 MM*	

Pos	Part No	UN	Qty	Description	Page No

Machine Type | Group Description | Used-In | Group Number | Page No

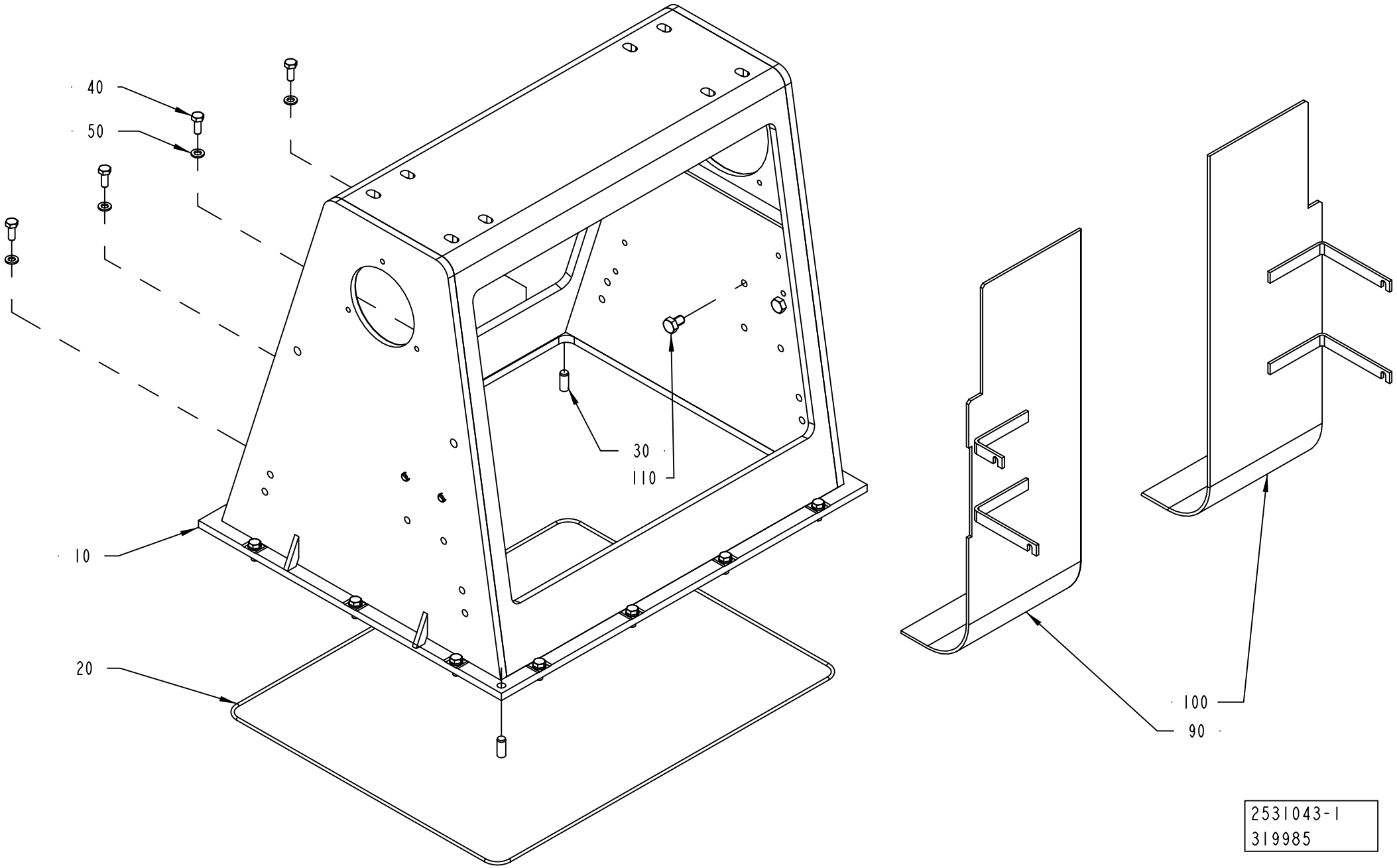
40
50
30
110
10
20
100
90
2531043-1
319985

ECM: 326055 - 20080103
Group number: 2531043-0100
Assembly Drawing: 2531043-1_1_AB

Pos	Part No	UN	Qty	Description	Page No
A3/FLEX TBA 1890S, A3/FLEX TBA 2000S, A3/FLEX TBA 1400B					
090	2532963-0000		1	DEFLECTOR	
100	2532964-0000		1	DEFLECTOR	
Common Parts					
010	2531044-0000		1	BOX FRAME	
020	90459-1314		1	O-RING 491X3 MM	
030	311103-0401		2	PARALLEL PIN ISO 2338 8M6X20 A1	
040	312105-0368		14	SCREW M6S ISO 4017 M6X16 A480	
050	315105-0153		14	WASHER BRB 6,4X12 RFR	
060	90153-0023		1	ADHESIVE, SILICON 251470 TUB 90CC(UN1993	
110	312105-0447		4	SCREW M6S ISO 4017 M8X12 A480	

Pos	Part No	UN	Qty	Description	Page No

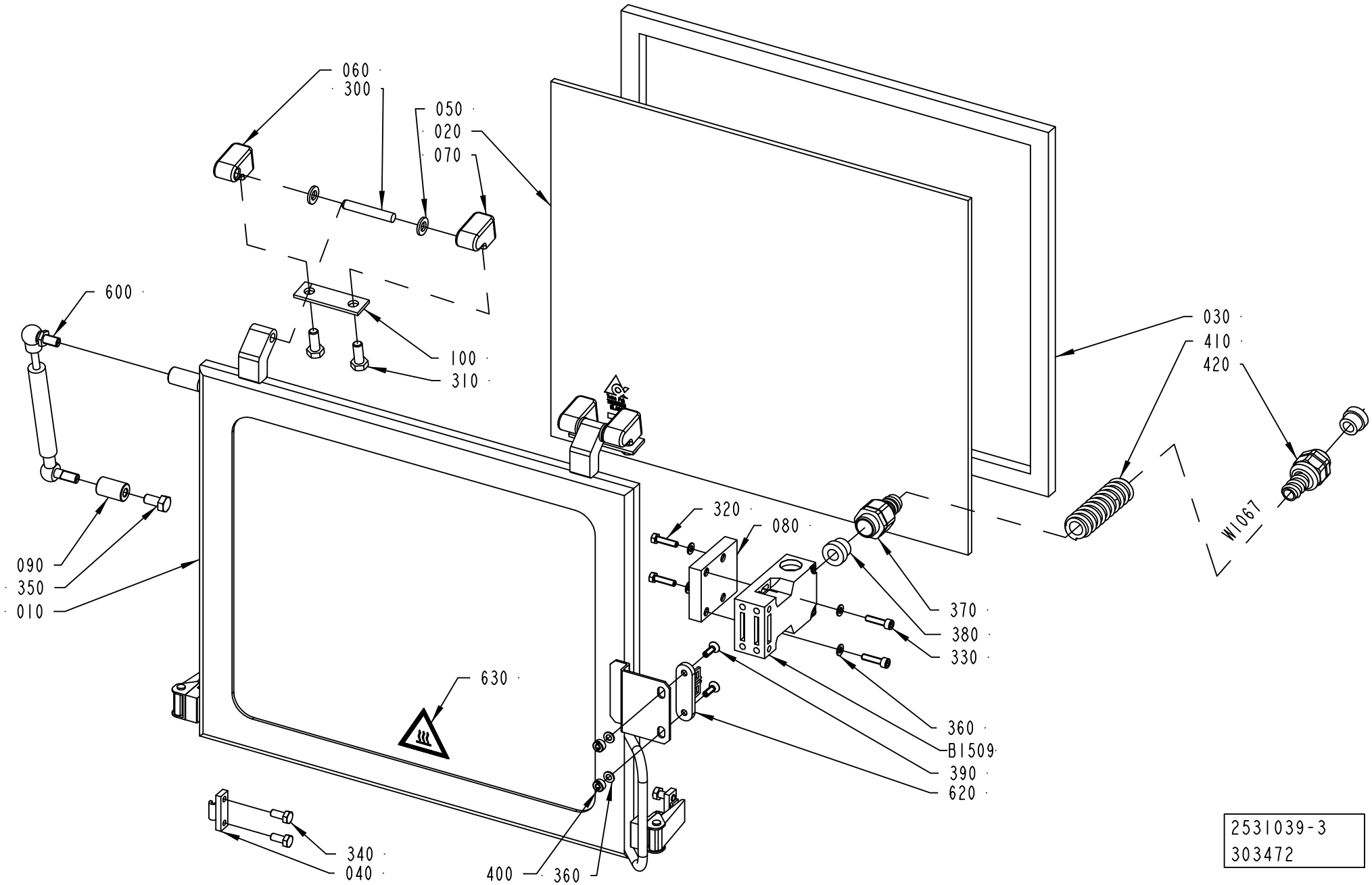
060
300
050
020
070
600
100
310
030
410
420
W1067
320
080
090
350
010
370
380
330
630
360
B1509
390
620
340
040
400
360
2531039-3
303472

ECM: 304243 - 20070417
Group number: 2531039-0150
Assembly Drawing: 2531039-3_1_AA

Pos	Part No	UN	Qty	Description	Page No
-					
010	2531038-0000		1	FRAME	
020	2874750-0000		1	GLASS PANE	
030	2531040-0000		1	GASKET	
040	271860-0000		2	CLAMP BLOCK	
050	441739-0000		4	WASHER	
060	1549992-0000		2	HINGE FLANGE	
070	1549993-0000		2	HINGE FLANGE	
080	2541651-0000		1	PLATE	
090	1549994-0000		1	SPACER	
100	441737-0000		2	WASHER	
300	311103-0413		2	PARALLEL PIN ISO 2338 8M6X50 A1	
310	312105-0451		4	SCREW M6S ISO 4017 M8X20 A480	
320	312105-0331		2	SCREW M6S ISO 4017 M5X20 A480	
330	312115-0331		2	SCREW ISO4762 M5X20 A4 80	
340	312105-0367		4	SCREW M6S ISO 4017 M6X14 A480	
350	312105-0449		1	SCREW M6S ISO 4017 M8X16 A480	
360	315105-0146		6	WASHER BRB 5,3X10 RFR	
370	90458-0429		1	HOSE GLAND W/O INSERT M20 EXTENDED	
380	353249-0011		2	INSERT, SINGLE HOLE, EK 153/11	
390	312155-0329		2	SCREW DIN 7991 MF6S M5X16 A4 70	
400	575034-0000		2	ROUND NUT	
410	90152-0050	M	1	SPIRAL CONDUIT, 20X13, UL 1313	
420	353243-0009		1	HOSE GLAND W/O INSERT PG13,5 EXTENDED	
600	90347-0039		1	DAMPER	
620	90044-0310		1	KEY FOR SAFETY SWITCH AZ 15/16 B1	
630	359705-0007		1	WARNING SIGN ISO, HOT SURFACE	
B1509	90459-0472		1	KEY SAF.SW. AZ 16 02ZVRK-M20-2152-2254	
W1067	351150-0405	M	1.7	CABLE OLFLEX 5X0,75 MM2 LIGHT/GREY	

Pos	Part No	UN	Qty	Description	Page No

Machine Type | Group Description | Used-In | Group Number | Page No

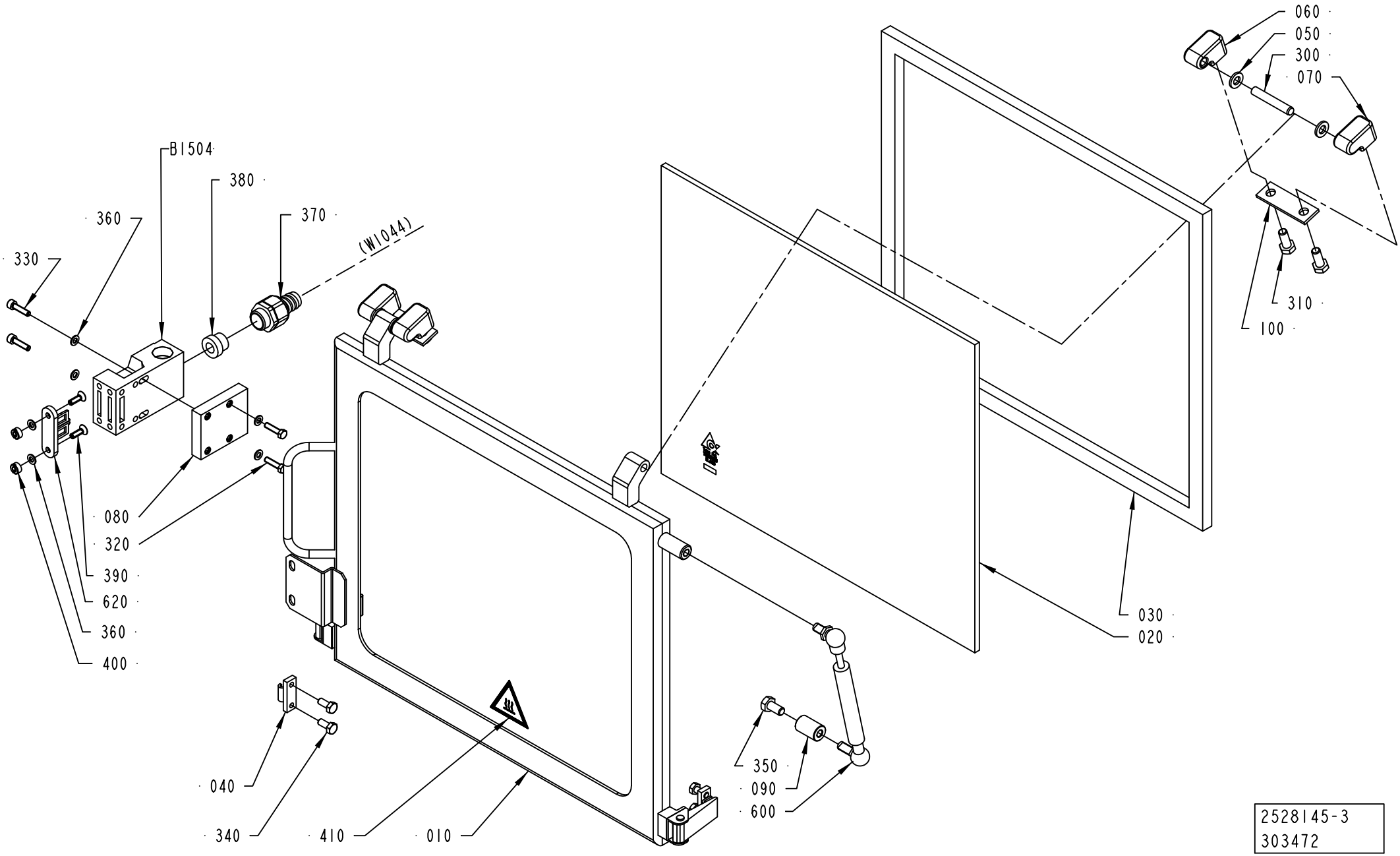
060
050
300
070
310
100
B1504
380
370
360
330
(W1044)
080
320
390
620
360
400
030
020
350
090
600
040
340
410
010
2528145-3
303472

ECM: 304245 - 20070417
Group number: 2528145-0150
Assembly Drawing: 2528145-3_1_AA

Pos	Part No	UN	Qty	Description	Page No
-					
010	2528144-0000		1	FRAME	
020	2874750-0000		1	GLASS PANE	
030	2531040-0000		1	GASKET	
040	271860-0000		2	CLAMP BLOCK	
050	441739-0000		4	WASHER	
060	1549992-0000		2	HINGE FLANGE	
070	1549993-0000		2	HINGE FLANGE	
080	2541651-0000		1	PLATE	
090	1549994-0000		1	SPACER	
100	441737-0000		2	WASHER	
300	311103-0413		2	PARALLEL PIN ISO 2338 8M6X50 A1	
310	312105-0451		4	SCREW M6S ISO 4017 M8X20 A480	
320	312105-0331		2	SCREW M6S ISO 4017 M5X20 A480	
330	312115-0331		2	SCREW ISO4762 M5X20 A4 80	
340	312105-0367		4	SCREW M6S ISO 4017 M6X14 A480	
350	312105-0449		1	SCREW M6S ISO 4017 M8X16 A480	
360	315105-0146		6	WASHER BRB 5,3X10 RFR	
370	90458-0429		1	HOSE GLAND W/O INSERT M20 EXTENDED	
380	353249-0011		1	INSERT, SINGLE HOLE, EK 153/11	
390	312155-0329		2	SCREW DIN 7991 MF6S M5X16 A4 70	
400	575034-0000		2	ROUND NUT	
410	359705-0007		1	WARNING SIGN ISO, HOT SURFACE	
600	90347-0039		1	DAMPER	
620	90044-0310		1	KEY FOR SAFETY SWITCH AZ 15/16 B1	
B1504	90459-0472		1	KEY SAF.SW. AZ 16 02ZVRK-M20-2152-2254	

Pos	Part No	UN	Qty	Description	Page No

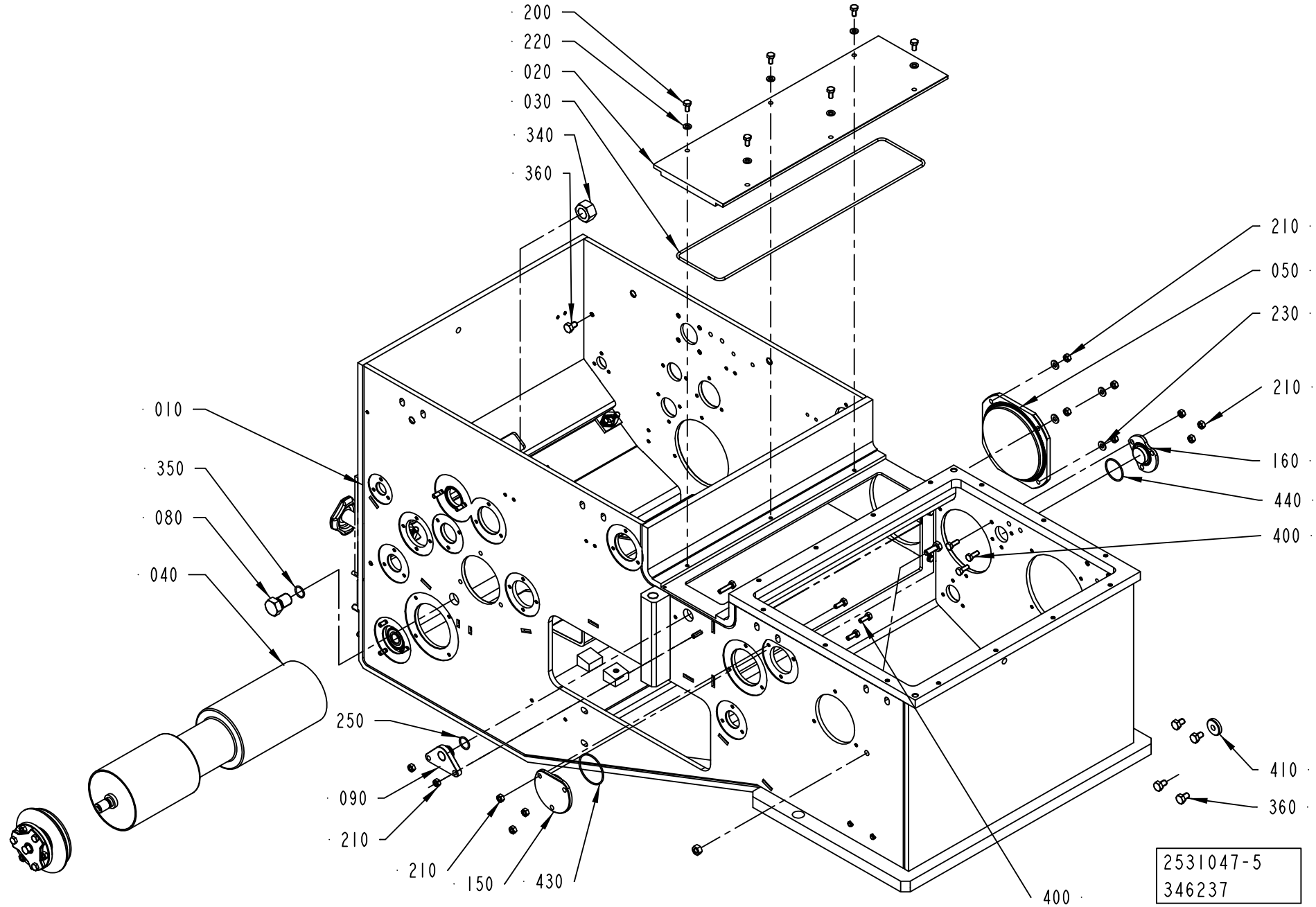
200
220
020
030
340
360
210
050
230
210
160
440
400
010
350
080
040
250
090
210
210
150
430
400
410
360
2531047-5
346237

Pos	Part No	UN	Qty	Description	Page No
A3/FLEX TBA 0200S NODIMC, A3/FLEX TBA 1000SQ NODIMC, A3/FLEX TBA 1000S NODIMC, A3/FLEX TBA 1000B NODIMC, A3/FLEX TBA 0500B NODIMC, A3/FLEX TPA 1000SQ NODIMC, A3/FLEX TBA 1500S NODIMC, A3/FLEX TBA 0200B NODIMC, A3/FLEX TBA 0250B NODIMC, A3/FLEX TBA 0330S NODIMC, A3/FLEX TPA 0330SQ NODIMC, A3/FLEX TPA 0500SQ NODIMC, A3/FLEX TBA 0250S NODIMC, A3/FLEX TBA 0200M NODIMC, A3/FLEX TBA 0500S NODIMC, A3/FLEX TPA 0200SQ NODIMC, A3/FLEX TPA 0250SQ NODIMC, A3/FLEX TBA 0200SQ NODIMC, A3/FLEX TBA 0250SQ NODIMC, A3/FLEX TGA 1000SQ NODIMC, A3/FLEX TBA 0500SQ NODIMC, A3/FLEX TGA 0500SQ NODIMC, A3/FLEX TGA 0750SQ NODIMC (See drawing on page: 1-156)					
020	2532896-0000		1	COVER	
030	2532897-0000		1	GASKET	
040	2833041-0000		1	BENDING ROLLER	
050	1548732-0000		1	LID	
090	2531053-0000		1	PLUG	
100	2531054-0000		2	PLUG	
110	2531055-0000		1	PLUG	
150	2878595-0000		1	LID	
160	2878596-0000		1	LID	
200	312105-0366		6	SCREW M6S ISO 4017 M6X12 A480	
210	312605-0316		20	HEXAGON NUT, M6M M6 A280	
220	315105-0153		6	WASHER BRB 6,4X12 RFR	
230	315105-0156		4	WASHER BRB 6,7X14 RFR	
240	312105-0372		2	SCREW M6S ISO 4017 M6X25 A480	
250	315205-0705		1	O-RING 17,17X1,78 MM	
260	315205-0802		2	O-RING 41,0X1,78 MM	
270	315229-0104		1	GASKETS, 35,8X42,8X3,7 MM 1"1/2 FD	
280	312105-0371		8	SCREW M6S ISO 4017 M6X22 A480	
290	312105-0452		5	SCREW M6S ISO 4017 M8X22 A480	
300	312605-0318		5	HEXAGON NUT, M6M M8 A280	
360	312105-0447		7	SCREW M6S ISO 4017 M8X12 A480	
400	312105-0368		6	SCREW M6S ISO 4017 M6X16 A480	
410	315125-0165		1	WASHER TBRSB 8,4X26X5 A4	
430	315205-0715		1	O-RING 33,05X1,78 MM	
440	315205-0804		1	O-RING 47,35X1,78 MM	
A3/FLEX TBA 1000S LIGHTCAP (See drawing on page: 1-154)					
020	2532896-0000		1	COVER	
030	2532897-0000		1	GASKET	
040	2715553-0000		1	BENDING ROLLER	
050	1548732-0000		1	LID	
080	2594624-0000		1	PLUG	
090	2531053-0000		1	PLUG	
150	2878595-0000		1	LID	
160	2878596-0000		1	LID	
200	312105-0366		6	SCREW M6S ISO 4017 M6X12 A480	
210	312605-0316		12	HEXAGON NUT, M6M M6 A280	
220	315105-0153		6	WASHER BRB 6,4X12 RFR	
230	315105-0156		4	WASHER BRB 6,7X14 RFR	
240	312105-0372		2	SCREW M6S ISO 4017 M6X25 A480	
250	315205-0705		1	O-RING 17,17X1,78 MM	
290	312105-0452		1	SCREW M6S ISO 4017 M8X22 A480	
300	312605-0318		1	HEXAGON NUT, M6M M8 A280	
340	90099-0095		1	NUT HEX. M18X1,5	
350	315205-0704		1	O-RING 15,6X1,78 MM	
360	312105-0447		7	SCREW M6S ISO 4017 M8X12 A480	
400	312105-0368		6	SCREW M6S ISO 4017 M6X16 A480	
410	315125-0165		1	WASHER TBRSB 8,4X26X5 A4	
430	315205-0715		1	O-RING 33,05X1,78 MM	
440	315205-0804		1	O-RING 47,35X1,78 MM	
A3/FLEX TBA 1000S STDA7, A3/FLEX TBA 1000B STDA7 (See drawing on page: 1-154)					
020	2532896-0000		1	COVER	
030	2532897-0000		1	GASKET	
040	2833042-0000		1	BENDING ROLLER	
050	1548732-0000		1	LID	
080	2594624-0000		1	PLUG	
090	2531053-0000		1	PLUG	
150	2878595-0000		1	LID	
160	2878596-0000		1	LID	
200	312105-0366		6	SCREW M6S ISO 4017 M6X12 A480	
210	312605-0316		12	HEXAGON NUT, M6M M6 A280	
220	315105-0153		6	WASHER BRB 6,4X12 RFR	
230	315105-0156		4	WASHER BRB 6,7X14 RFR	
240	312105-0372		2	SCREW M6S ISO 4017 M6X25 A480	
250	315205-0705		1	O-RING 17,17X1,78 MM	
290	312105-0452		1	SCREW M6S ISO 4017 M8X22 A480	
300	312605-0318		1	HEXAGON NUT, M6M M8 A280	
340	90099-0095		1	NUT HEX. M18X1,5	
350	315205-0704		1	O-RING 15,6X1,78 MM	
360	312105-0447		7	SCREW M6S ISO 4017 M8X12 A480	
400	312105-0368		6	SCREW M6S ISO 4017 M6X16 A480	
410	315125-0165		1	WASHER TBRSB 8,4X26X5 A4	
430	315205-0715		1	O-RING 33,05X1,78 MM	
440	315205-0804		1	O-RING 47,35X1,78 MM	
A3/FLEX TBA 2000S NODIMC, A3/FLEX TBA 1890S NODIMC, A3/FLEX TBA 1400B NODIMC (See drawing on page: 1-158)					
020	2532896-0000		1	COVER	

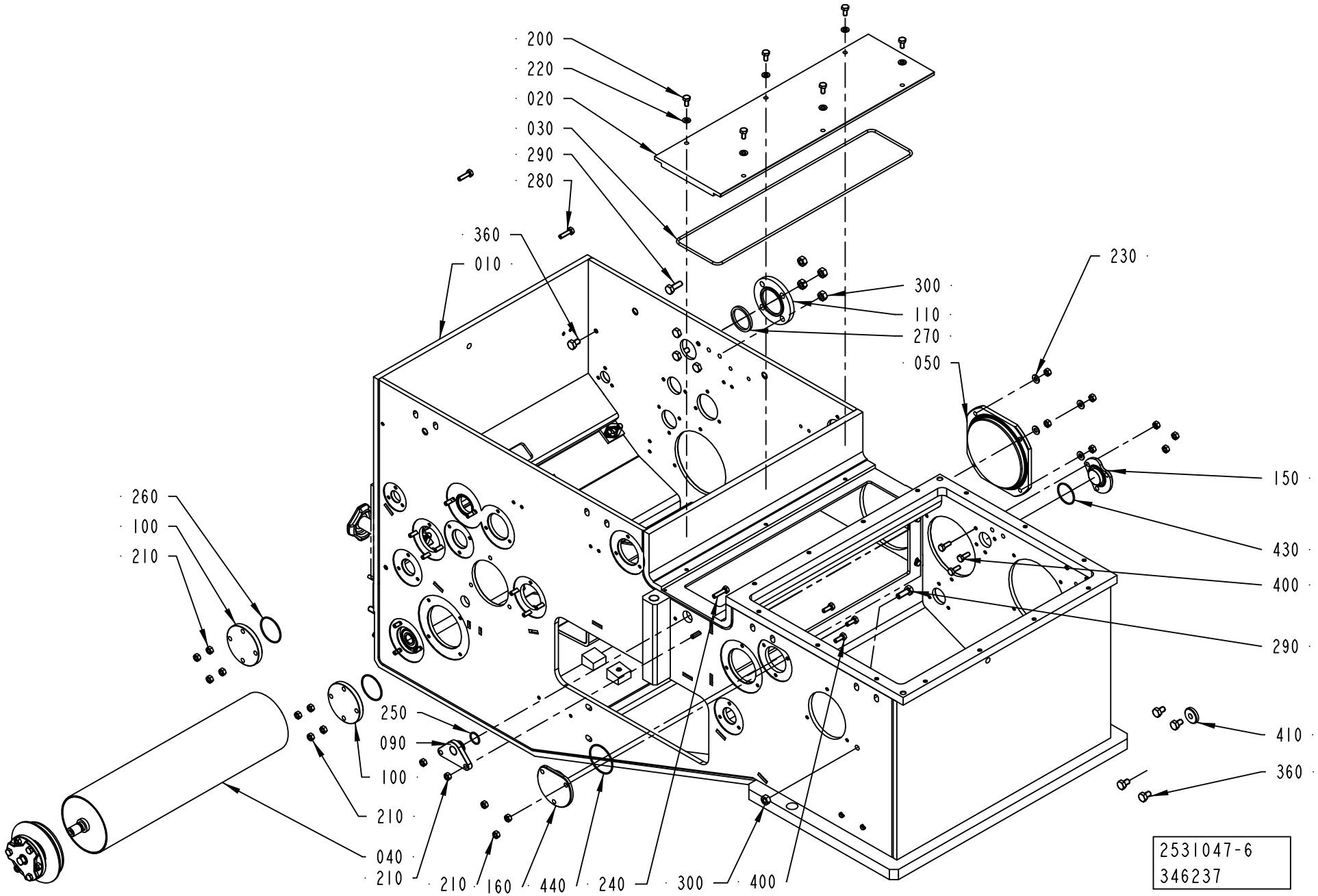
200
220
020
030
290
280
360
010
230
300
110
270
050
150
430
400
290
410
360
260
100
210
250
090
100
210
040
210
210
160
440
240
300
400
2531047-6
346237

ECM: 387763 - 20090402
Group number: 2531047-0200
Assembly Drawing: 2531047-6_1_AE

This list covers pages from 1-154 to 1-159

Pos	Part No	UN	Qty	Description	Page No
A3/FLEX TBA 2000S NODIMC, A3/FLEX TBA 1890S NODIMC, A3/FLEX TBA 1400B NODIMC (Cont'd) (See drawing on page: 1-158)					
030	2532897-0000		1	GASKET	
040	2833041-0000		1	BENDING ROLLER	
050	1548732-0000		1	LID	
090	2531053-0000		1	PLUG	
100	2531054-0000		2	PLUG	
110	2531055-0000		1	PLUG	
120	2547398-0000		1	LID	
130	2547399-0000		1	LID	
140	441737-0000		2	WASHER	
150	2878595-0000		1	LID	
160	2878596-0000		1	LID	
200	312105-0366		6	SCREW M6S ISO 4017 M6X12 A480	
210	312605-0316		23	HEXAGON NUT, M6M M6 A280	
220	315105-0153		8	WASHER BRB 6,4X12 RFR	
230	315105-0156		4	WASHER BRB 6,7X14 RFR	
240	312105-0372		2	SCREW M6S ISO 4017 M6X25 A480	
250	315205-0705		1	O-RING 17,17X1,78 MM	
260	315205-0802		2	O-RING 41,0X1,78 MM	
270	315229-0104		1	GASKETS, 35,8X42,8X3,7 MM 1"1/2 FD	
280	312105-0371		15	SCREW M6S ISO 4017 M6X22 A480	
290	312105-0452		10	SCREW M6S ISO 4017 M8X22 A480	
300	312605-0318		11	HEXAGON NUT, M6M M8 A280	
310	90458-0640		1	O-RING 88,62X1,78 MM	
320	90459-0094		1	O-RING 133,07X1,78 MM	
330	315105-0165		5	WASHER BRB 8,4X16 RFR	
360	312105-0447		7	SCREW M6S ISO 4017 M8X12 A480	
370	312105-0329		2	SCREW M6S ISO 4017 M5X16 A480	
380	315105-0146		2	WASHER BRB 5,3X10 RFR	
390	312605-0314		2	HEXAGON NUT, M6M M5 A280	
400	312105-0368		8	SCREW M6S ISO 4017 M6X16 A480	
430	315205-0715		1	O-RING 33,05X1,78 MM	
440	315205-0804		1	O-RING 47,35X1,78 MM	
A3/FLEX TPA 500SQ LIGHTCAP (See drawing on page: 1-154)					
020	2532896-0000		1	COVER	
030	2532897-0000		1	GASKET	
040	2951497-0000		1	ROLLER	
050	1548732-0000		1	LID	
080	2594624-0000		1	PLUG	
090	2531053-0000		1	PLUG	
150	2878595-0000		1	LID	
160	2878596-0000		1	LID	
200	312105-0366		6	SCREW M6S ISO 4017 M6X12 A480	
210	312605-0316		12	HEXAGON NUT, M6M M6 A280	
220	315105-0153		6	WASHER BRB 6,4X12 RFR	
230	315105-0156		4	WASHER BRB 6,7X14 RFR	
240	312105-0372		2	SCREW M6S ISO 4017 M6X25 A480	
250	315205-0705		1	O-RING 17,17X1,78 MM	
290	312105-0452		1	SCREW M6S ISO 4017 M8X22 A480	
300	312605-0318		1	HEXAGON NUT, M6M M8 A280	
340	90099-0095		1	NUT HEX. M18X1,5	
350	315205-0704		1	O-RING 15,6X1,78 MM	
360	312105-0447		7	SCREW M6S ISO 4017 M8X12 A480	
400	312105-0368		6	SCREW M6S ISO 4017 M6X16 A480	
410	315125-0165		1	WASHER TBRSB 8,4X26X5 A4	
430	315205-0715		1	O-RING 33,05X1,78 MM	
440	315205-0804		1	O-RING 47,35X1,78 MM	
Common Parts					
010	2528129-0200		1	FRAME HOUSING	**1-161, 1-163**

Machine Type	Group Description	Used-In	Group Number	Page No

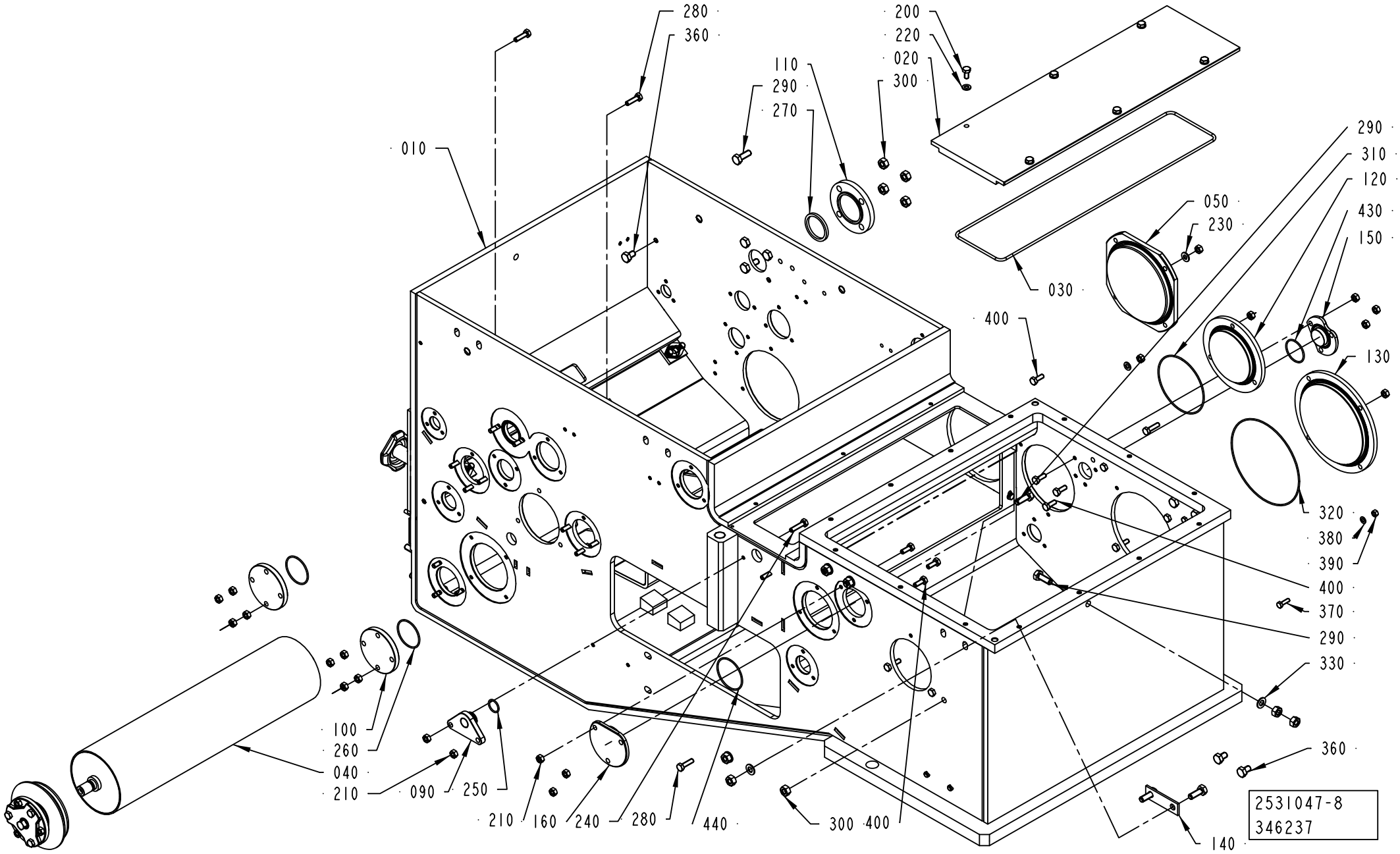
280
360
110
290
270
200
220
020
300
010
290
310
120
430
150
050
230
030
400
130
320
380
390
400
370
290
330
360
140
100
260
040
210
090
250
210
160
240
280
440
300
400
2531047-8
346237

ECM: 387763 - 20090402
Group number: 2531047-0200
Assembly Drawing: 2531047-8_1_AD

This list covers pages from 1-154 to 1-159

Pos	Part No	UN	Qty	Description	Page No
SEE PREVIOUS LISTS PAGES: 1-155, 1-157.					

Pos	Part No	UN	Qty	Description	Page No

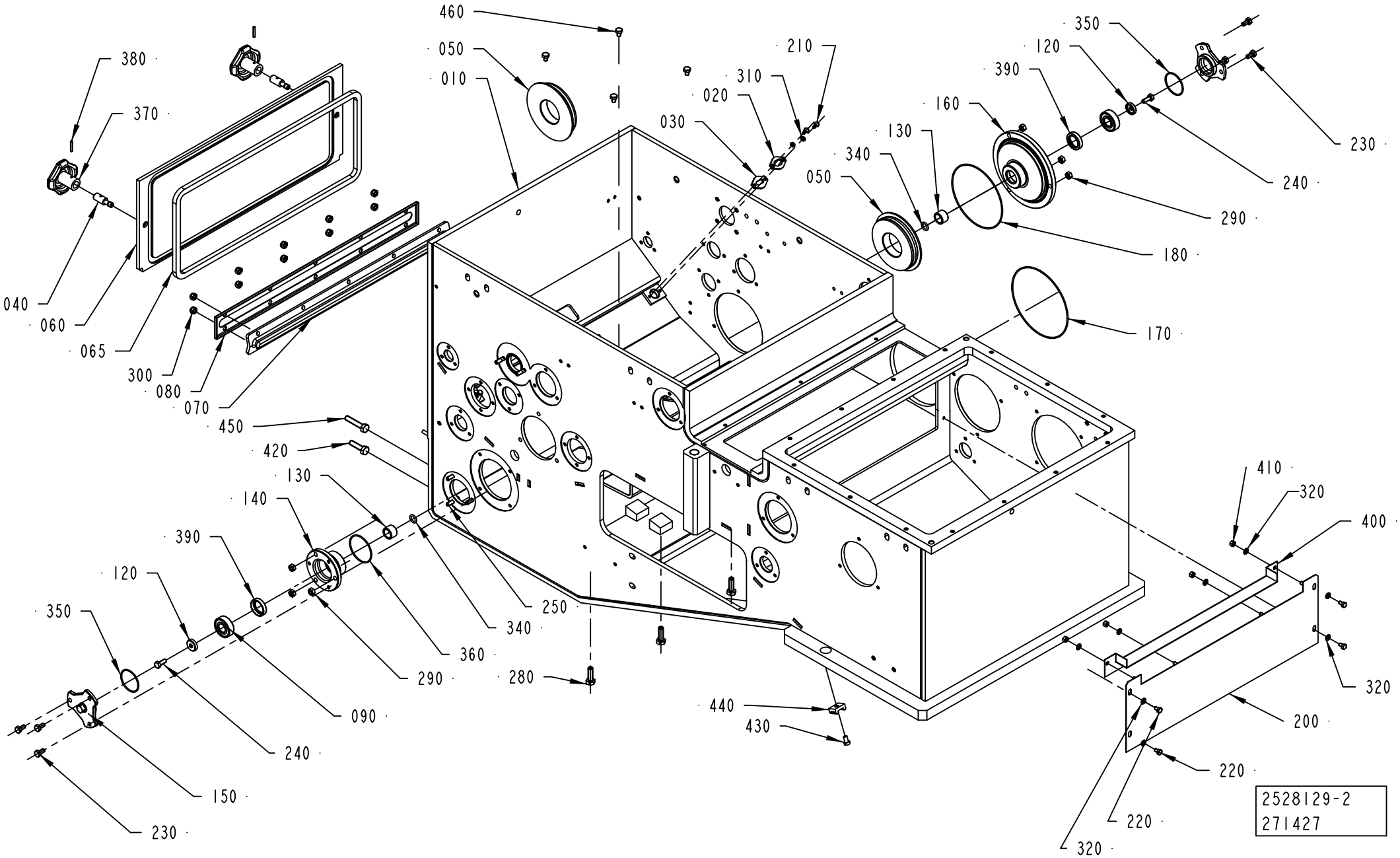
460
050
010
210
310
020
030
350
120
390
160
130
340
050
230
240
290
180
380
370
040
060
065
300
080
070
450
420
130
140
390
120
350
250
340
360
290
280
090
240
150
230
440
430
170
410
320
400
320
200
220
220
320
2528129-2
271427

ECM: 387765 - 20090402
Group number: 2528129-0200
Assembly Drawing: 2528129-2_1_AB

This list covers pages from 1-160 to 1-163

Pos	Part No	UN	Qty	Description	Page No
TBA 0200B, TBA 0200SQ, TBA 0250B, TBA 0330S, TPA 0330SQ, TBA 0250SQ					
050	1498783-0000		2	WHEEL	
200	2619171-0000		1	PLATE	
320	315105-0146		8	WASHER BRB 5,3X10 RFR	
400	2844044-0000		1	SLIDE	
410	312605-0314		4	HEXAGON NUT, M6M M5 A280	
TBA 0200M, TBA 0200S, TBA 0250S, TPA 0250SQ, TPA 0200SQ					
050	1498783-0000		2	WHEEL	
200	2619171-0000		1	PLATE	
320	315105-0146		8	WASHER BRB 5,3X10 RFR	
400	2844043-0000		1	SLIDE	
410	312605-0314		4	HEXAGON NUT, M6M M5 A280	
TBA 0500S, TPA 1000SQ, TPA 0750SQ, TGA 1000SQ, TGA 0750SQ, TGA 0500SQ					
050	1498783-0000		2	WHEEL	
200	2619171-0000		1	PLATE	
320	315105-0146		8	WASHER BRB 5,3X10 RFR	
400	2844045-0000		1	SLIDE	
410	312605-0314		4	HEXAGON NUT, M6M M5 A280	
TBA 0500SQ, TBA 0500B, TBA 1000SQ, TBA 1500S, TBA 1000S NOMOLDEDCAP, TBA 1000B NOMOLDEDCAP					
050	1498783-0000		2	WHEEL	
200	2619171-0000		1	PLATE	
320	315105-0146		8	WASHER BRB 5,3X10 RFR	
400	2844047-0000		1	SLIDE	
410	312605-0314		4	HEXAGON NUT, M6M M5 A280	
TBA 1000S LIGHTCAP					
050	2725564-0000		2	WHEEL	
200	2716445-0000		1	PLATE	
320	315105-0146		8	WASHER BRB 5,3X10 RFR	
400	2863118-0000		1	SLIDE	
410	312605-0314		4	HEXAGON NUT, M6M M5 A280	
TBA 1000S STDA7, TBA 1000B STDA7					
050	1498783-0000		2	WHEEL	
200	2716445-0000		1	PLATE	
320	315105-0146		8	WASHER BRB 5,3X10 RFR	
400	2893985-0000		1	SLIDE	
410	312605-0314		4	HEXAGON NUT, M6M M5 A280	
TBA 1890S, TBA 2000S, TBA 1400B					
050	1498783-0000		2	WHEEL	
200	2592530-0000		1	PLATE	
320	315105-0146		4	WASHER BRB 5,3X10 RFR	
TPA 500SQ NOMOLDEDCAP					
050	1498783-0000		2	WHEEL	
200	2619171-0000		1	PLATE	
320	315105-0146		8	WASHER BRB 5,3X10 RFR	
400	2844046-0000		1	SLIDE	
410	312605-0314		4	HEXAGON NUT, M6M M5 A280	
TPA 500SQ LIGHTCAP					
050	2725564-0000		2	WHEEL	
200	2716445-0000		1	PLATE	
320	315105-0146		8	WASHER BRB 5,3X10 RFR	
400	2951496-0000		1	PLATE	
410	312605-0314		4	HEXAGON NUT, M6M M5 A280	
Common Parts					
010	2695982-0000		1	HOUSING	
020	2528133-0000		2	WASHER	
030	2528134-0000		2	GASKET	
040	1036475-0000		2	PIN	
060	1499168-0000		1	LID	
065	1499169-0000		1	GASKET	
070	1499170-0000		1	GASKET	
080	1499171-0000		1	LID	
090	90458-1704		2	BALL BEARING, 15X35X11 MM	
120	1538725-0000		2	WASHER	
130	1538726-0000		2	BUSHING	
140	1548734-0000		1	FLANGE	
150	1548735-0000		2	LID	
160	1548739-0000		1	FLANGE	
170	90459-1686		1	O-RING 126,72X1,78 MM	
180	90459-1627		1	O-RING 114,02X1,78 MM	
210	312105-0289		4	SCREW M6S H4X10 A4 70 ISO4017/DIN933	
220	312105-0323		4	SCREW M6S ISO 4017 M5X8 A480	
230	312105-0366		6	SCREW M6S ISO 4017 M6X12 A480	
240	312105-0368		2	SCREW M6S ISO 4017 M6X16 A480	
250	312105-0370		6	SCREW M6S ISO 4017 M6X20 A480	
260	312105-0372		10	SCREW M6S ISO 4017 M6X25 A480	
280	312105-0453		3	SCREW M6S ISO 4017 M8X25 A480	
290	312605-0316		6	HEXAGON NUT, M6M M6 A280	
300	312812-0316		10	HEXAGON NUT, NY-LOCK M6 A480	
310	315105-0136		4	WASHER BRB 4,3X8 RFR	
340	315204-0209		2	O-RING 10,3X2,4 MM	
350	315205-0801		2	O-RING 37,82X1,78 MM	
360	315205-0804		1	O-RING 47,35X1,78 MM	
370	90051-0045		2	STELLAR KNOB, NO. 8323-257	

Machine Type | Group Description | Used-In | Group Number | Page No

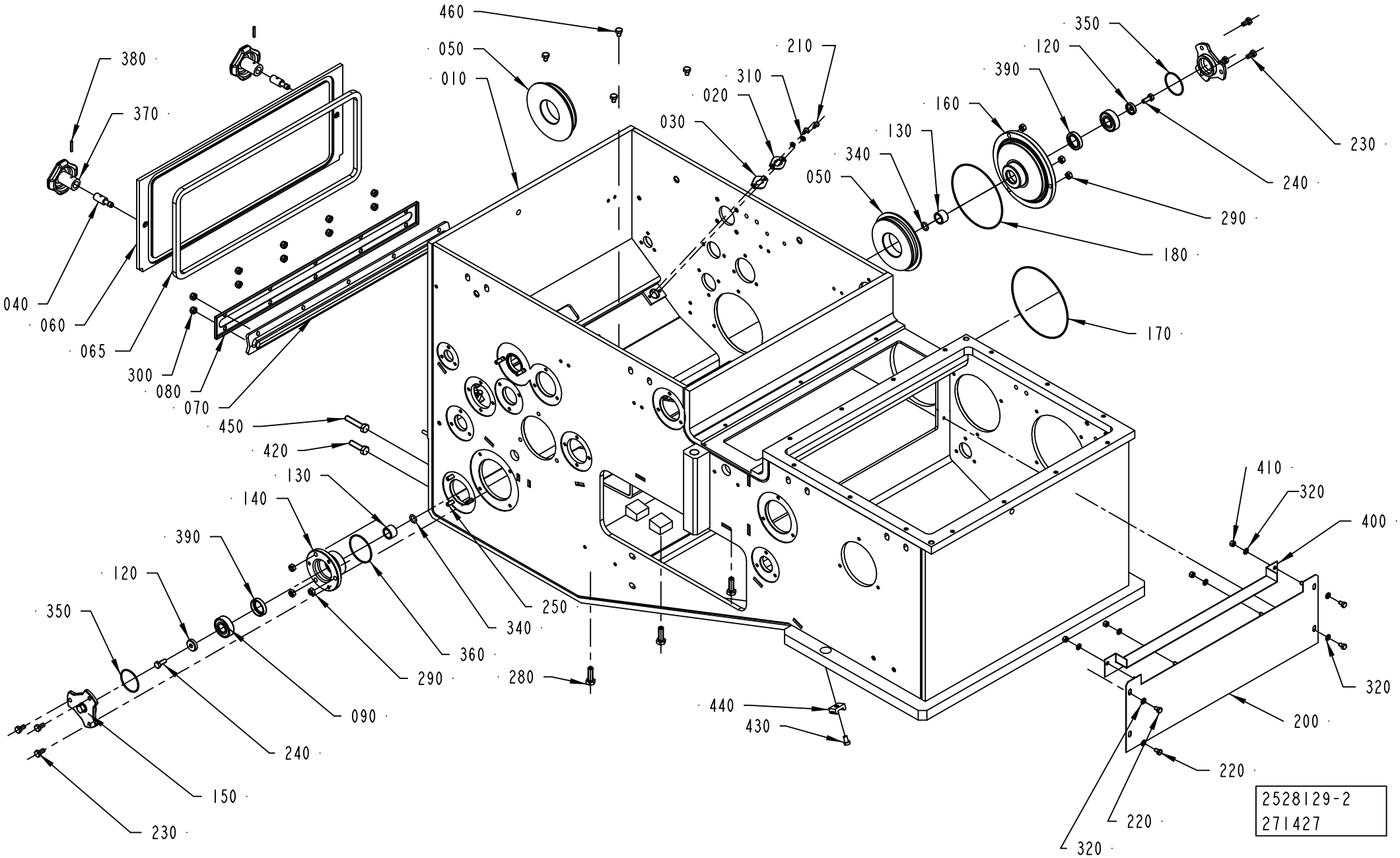
460
050
010
210
310
020
030
350
120
390
160
130
340
050
230
240
290
180
170
380
370
040
060
065
300
080
070
450
420
130
140
390
120
350
250
340
360
290
280
090
240
150
230
440
430
410
320
400
320
200
220
220
320
2528129-2
271427

ECM: 387765 - 20090402
Group number: 2528129-0200
Assembly Drawing: 2528129-2_1_AB

This list covers pages from 1-160 to 1-163

Pos	Part No	UN	Qty	Description	Page No
Common Parts (Cont'd)					
380	90258-0031		2	PIN, STRAIGHT SLOTTED SPRING FRP 3X20	
390	90458-0639		2	VARILIP 20X30X7 MM	
420	312105-0455		2	SCREW M6S ISO 4017 M8X30 A480	
430	312125-0364		9	SCREW ISO 1207 M6X10 A4	
440	352113-0204		9	ANCHOR PLATES FOR STRIPS, TYPE TM3S25-M	
450	312109-0459		2	SCREW M6S ISO 4017 M8X40 A480	
460	312105-0362		4	SCREW M6S ISO 4017 M6X8 A480	
500	312105-0447		4	SCREW M6S ISO 4017 M8X12 A480	

Pos	Part No	UN	Qty	Description	Page No

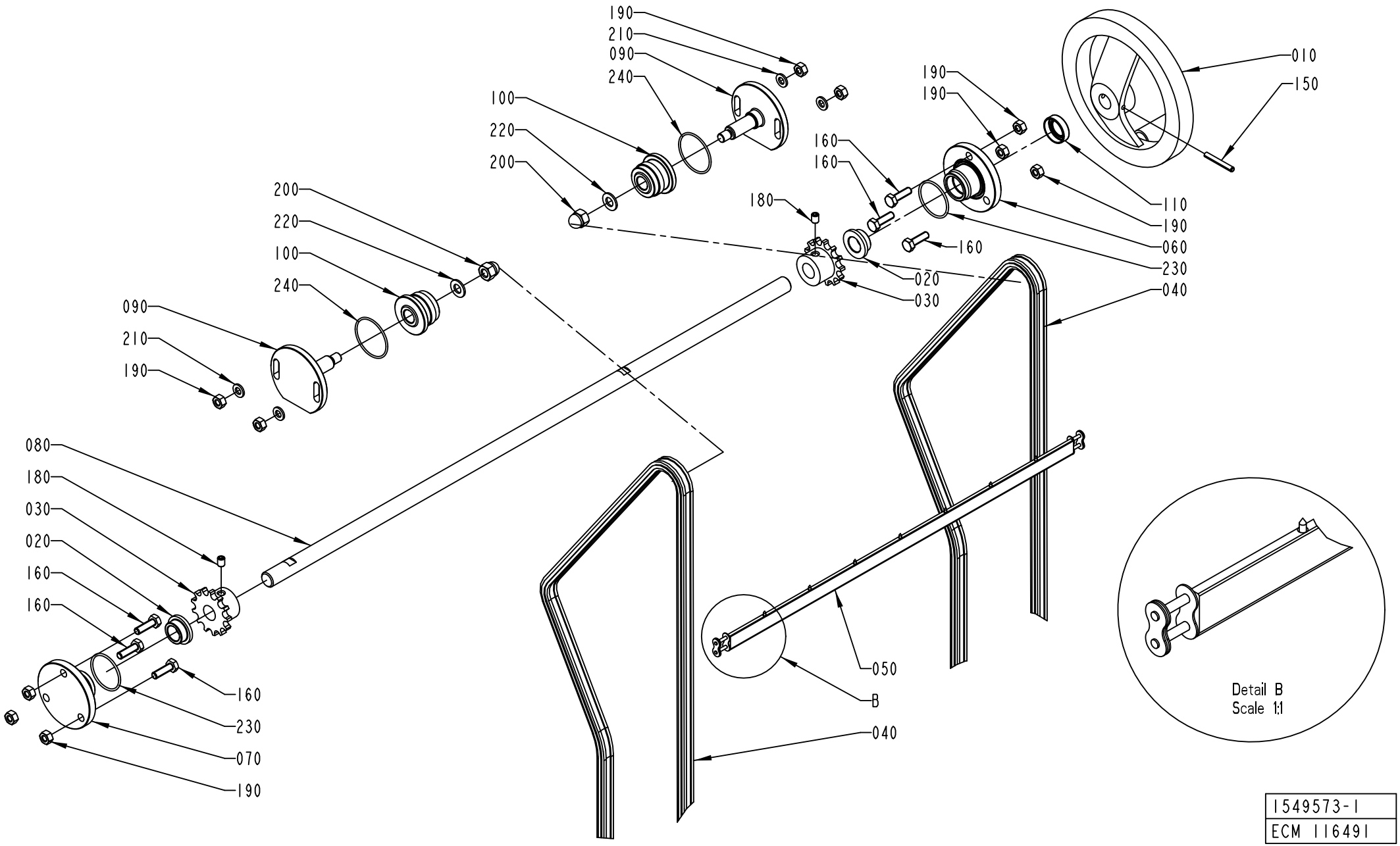

1549573-1
ECM 116491

ECM: 301747 - 20070402
Group number: 1549573-0100
Assembly Drawing: 1549573-1_1_AA

This list covers pages from 1-164 to 1-169

Pos	Part No	UN	Qty	Description	Page No
LIGHTCAP (See drawing on pages: 1-166, 1-168)					
090	2709225-0000		2	SHAFT	
STDA7 CAP, NOMOLDEDCAP (See drawing on page: 1-164)					
090	1523191-0000		2	SHAFT	
Common Parts					
010	247358-0000		1	SHIFTER HANDLE	
020	279008-0000		2	BUSHING	
030	1038464-0000		2	SPROCKET	
040	1549568-0000		2	CHAIN	
050	1511740-0000		1	CARRIER	
060	1549982-0000		1	FLANGE	
070	1549981-0000		1	FLANGE	
080	1523190-0000		1	SHAFT	
100	1532249-0000		2	WHEEL	
110	90459-1148		1	VARILIP 14X24X7 MM	
150	311112-0262		1	SPRING PIN, ISO 8752 4X32-C	
160	312105-0370		6	SCREW M6S ISO 4017 M6X20 A480	
180	312318-0362		2	SCREW ISO4029 M6X8 A4	
190	312605-0316		10	HEXAGON NUT, M6M M6 A280	
200	312705-0318		2	NUT HEX. DOMED CAP MHM-6 M8 A280	
210	315105-0153		4	WASHER BRB 6,4X12 RFR	
220	315105-0165		2	WASHER BRB 8,4X16 RFR	
230	315205-0714		2	O-RING 31,47X1,78 MM	
240	315204-0123		2	O-RING 35,1X1,6 MM	
250	318219-0056		2	CONNECTING LINK, SINGLE 3/8", SS	

Pos	Part No	UN	Qty	Description	Page No

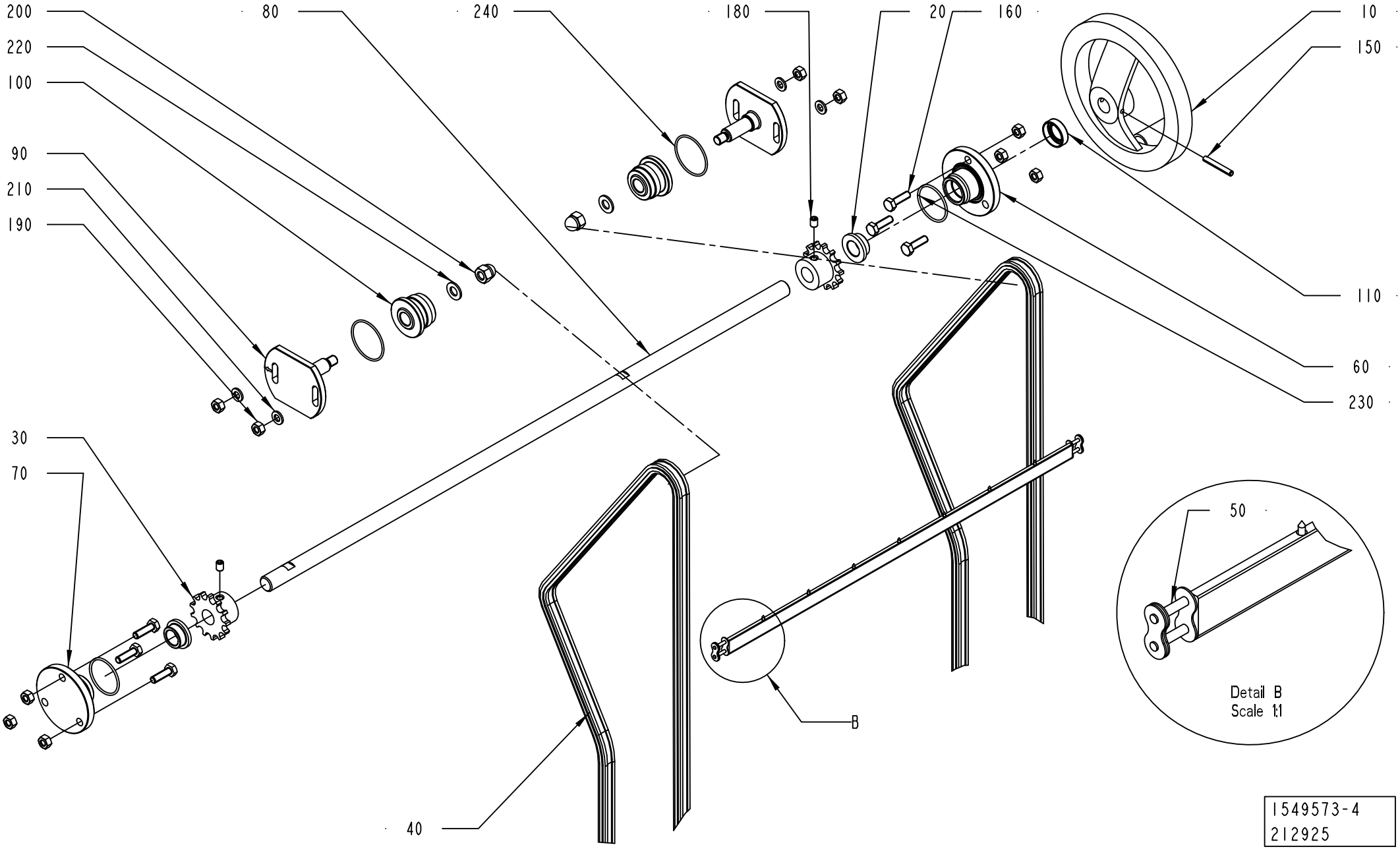
200
220
100
90
210
190
80
240
180
20
160
10
150
110
60
230
30
70
40
50
B
Detail B
Scale 1:1
1549573-4
212925

ECM: 301747 - 20070402
Group number: 1549573-0100
Assembly Drawing: 1549573-4_1_AA

This list covers pages from 1-164 to 1-169

Pos	Part No	UN	Qty	Description	Page No
LIGHTCAP (See drawing on pages: 1-166, 1-168)					
090	2709225-0000		2	SHAFT	
STDA7 CAP, NOMOLDEDCAP (See drawing on page: 1-164)					
090	1523191-0000		2	SHAFT	
Common Parts					
010	247358-0000		1	SHIFTER HANDLE	
020	279008-0000		2	BUSHING	
030	1038464-0000		2	SPROCKET	
040	1549568-0000		2	CHAIN	
050	1511740-0000		1	CARRIER	
060	1549982-0000		1	FLANGE	
070	1549981-0000		1	FLANGE	
080	1523190-0000		1	SHAFT	
100	1532249-0000		2	WHEEL	
110	90459-1148		1	VARILIP 14X24X7 MM	
150	311112-0262		1	SPRING PIN, ISO 8752 4X32-C	
160	312105-0370		6	SCREW M6S ISO 4017 M6X20 A480	
180	312318-0362		2	SCREW ISO4029 M6X8 A4	
190	312605-0316		10	HEXAGON NUT, M6M M6 A280	
200	312705-0318		2	NUT HEX. DOMED CAP MHM-6 M8 A280	
210	315105-0153		4	WASHER BRB 6,4X12 RFR	
220	315105-0165		2	WASHER BRB 8,4X16 RFR	
230	315205-0714		2	O-RING 31,47X1,78 MM	
240	315204-0123		2	O-RING 35,1X1,6 MM	
250	318219-0056		2	CONNECTING LINK, SINGLE 3/8", SS	

Pos	Part No	UN	Qty	Description	Page No

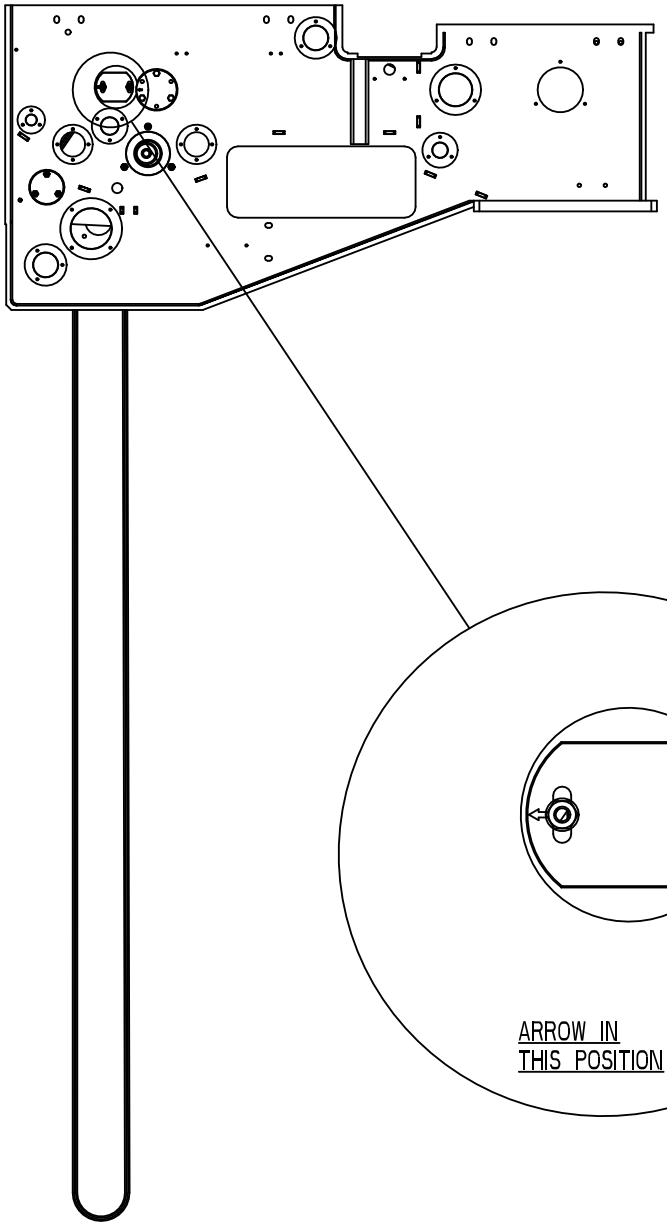

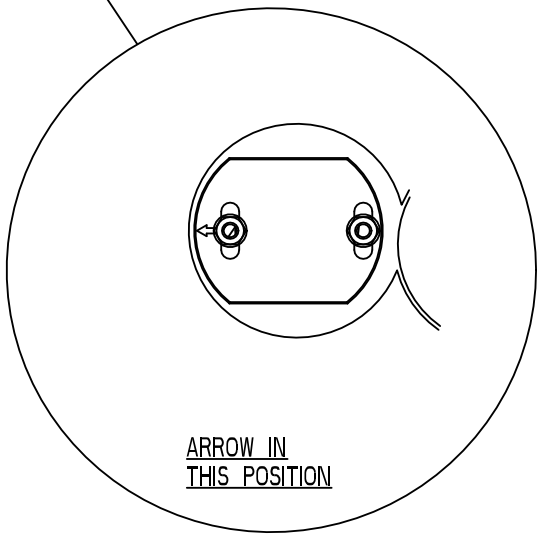

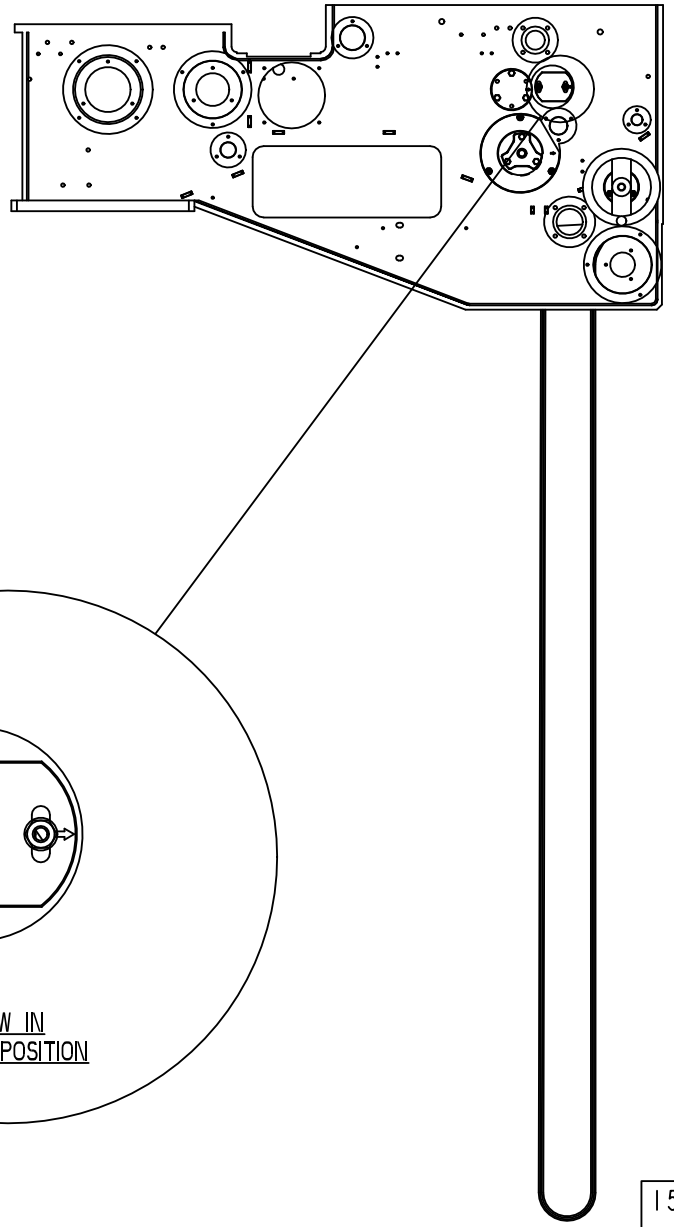

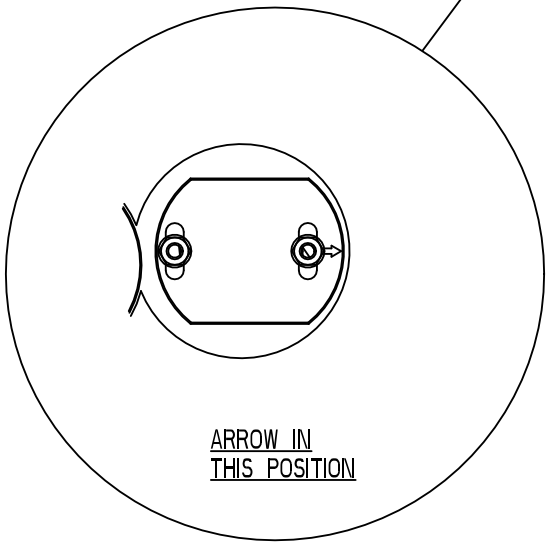

1549573-4
212925

ECM: 301747 - 20070402
Group number: 1549573-0100
Assembly Drawing: 1549573-4_2_AA

This list covers pages from 1-164 to 1-169

Pos	Part No	UN	Qty	Description	Page No
LIGHTCAP (See drawing on pages: 1-166, 1-168)					
090	2709225-0000		2	SHAFT	
STDA7 CAP, NOMOLDEDCAP (See drawing on page: 1-164)					
090	1523191-0000		2	SHAFT	
Common Parts					
010	247358-0000		1	SHIFTER HANDLE	
020	279008-0000		2	BUSHING	
030	1038464-0000		2	SPROCKET	
040	1549568-0000		2	CHAIN	
050	1511740-0000		1	CARRIER	
060	1549982-0000		1	FLANGE	
070	1549981-0000		1	FLANGE	
080	1523190-0000		1	SHAFT	
100	1532249-0000		2	WHEEL	
110	90459-1148		1	VARILIP 14X24X7 MM	
150	311112-0262		1	SPRING PIN, ISO 8752 4X32-C	
160	312105-0370		6	SCREW M6S ISO 4017 M6X20 A480	
180	312318-0362		2	SCREW ISO4029 M6X8 A4	
190	312605-0316		10	HEXAGON NUT, M6M M6 A280	
200	312705-0318		2	NUT HEX. DOMED CAP MHM-6 M8 A280	
210	315105-0153		4	WASHER BRB 6,4X12 RFR	
220	315105-0165		2	WASHER BRB 8,4X16 RFR	
230	315205-0714		2	O-RING 31,47X1,78 MM	
240	315204-0123		2	O-RING 35,1X1,6 MM	
250	318219-0056		2	CONNECTING LINK, SINGLE 3/8", SS	

Pos	Part No	UN	Qty	Description	Page No

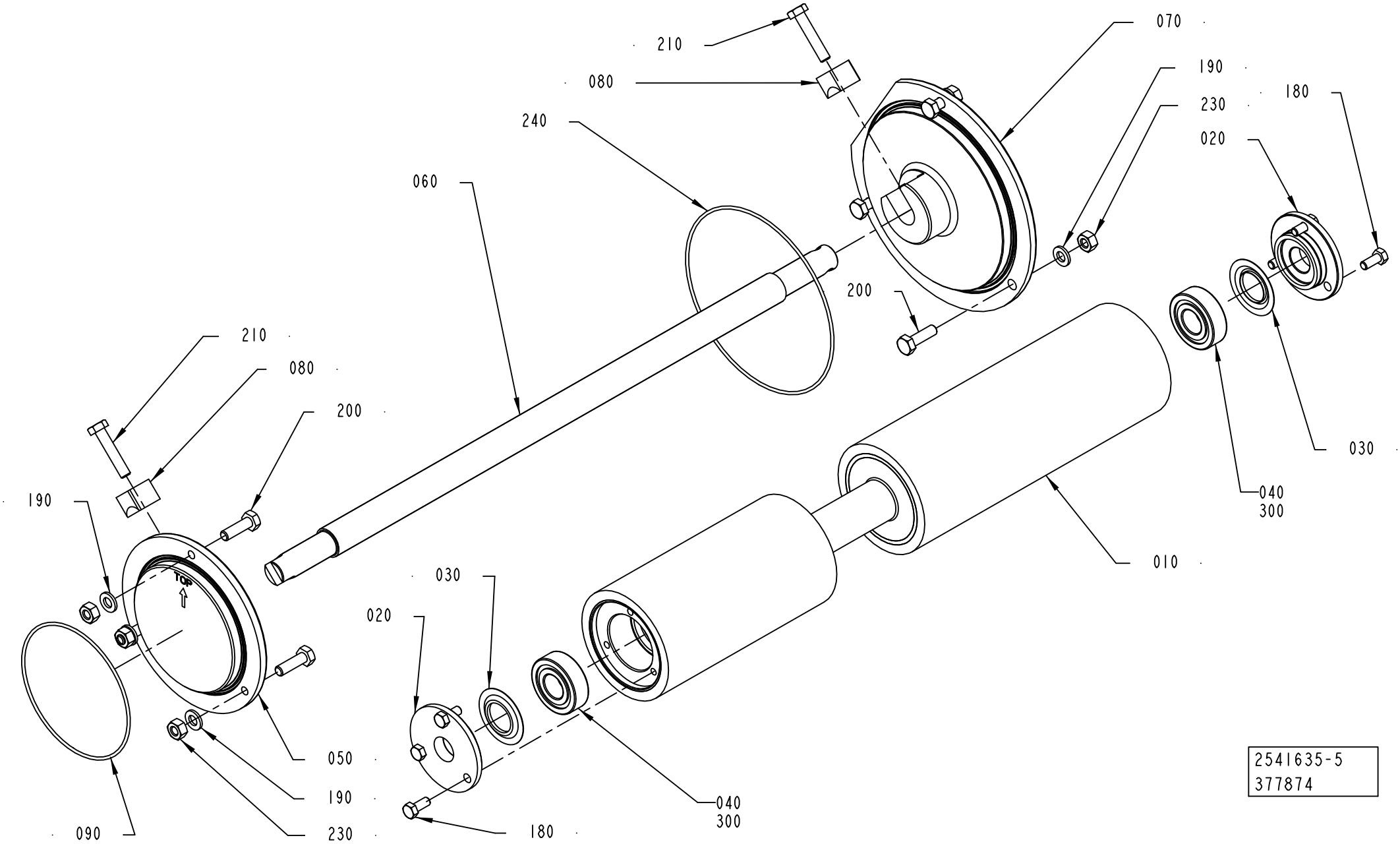
210
080
240
060
070
190
230
180
020
200
210
080
200
190
030
020
050
190
230
090
180
040
300
010
040
300
030
TOP
2541635-5
377874

ECM: 391264 - 20090701
Group number: 2541635-0200
Assembly Drawing: 2541635-5_1_AA

This list covers pages from 1-170 to 1-173

Pos	Part No	UN	Qty	Description	Page No
A3/FLEX TBA 0200S NODIMC, A3/FLEX TBA 1000SQ NODIMC, A3/FLEX TBA 1000S NODIMC, A3/FLEX TBA 1000B NODIMC, A3/FLEX TBA 0500B NODIMC, A3/FLEX TPA 1000SQ NODIMC, A3/FLEX TBA 1500S NODIMC, A3/FLEX TBA 0200B NODIMC, A3/FLEX TBA 0250B NODIMC, A3/FLEX TBA 0330S NODIMC, A3/FLEX TPA 0330SQ NODIMC, A3/FLEX TPA 0500SQ NODIMC, A3/FLEX TBA 0250S NODIMC, A3/FLEX TBA 0200M NODIMC, A3/FLEX TBA 0500S NODIMC, A3/FLEX TPA 0200SQ NODIMC, A3/FLEX TPA 0250SQ NODIMC, A3/FLEX TPA 0750SQ NODIMC, A3/FLEX TBA 0200SQ NODIMC, A3/FLEX TBA 0250SQ NODIMC, A3/FLEX TGA 1000SQ NODIMC, A3/FLEX TBA 0500SQ NODIMC, A3/FLEX TGA 0500SQ NODIMC, A3/FLEX TGA 0750SQ NODIMC (See drawing on page: 1-172)					
010	1511769-0000		1	ROLLER	
030	90214-0303		4	SEALING RING, 18,6X35X2 MM	
050	3006266-0000		1	FLANGE	
070	3006267-0000		1	FLANGE	
A3/FLEX TBA 1000S LIGHTCAP (See drawing on page: 1-170)					
010	2528136-0000		1	SQUEE-GEE ROLLER	
030	90214-0303		2	SEALING RING, 18,6X35X2 MM	
050	2921583-0000		1	FLANGE	
070	2921584-0000		1	FLANGE	
A3/FLEX TBA 1000S STDA7, A3/FLEX TBA 1000B STDA7 (See drawing on page: 1-170)					
010	2528136-0000		1	SQUEE-GEE ROLLER	
030	90214-0303		2	SEALING RING, 18,6X35X2 MM	
050	3006266-0000		1	FLANGE	
070	3006267-0000		1	FLANGE	
A3/FLEX TBA 2000S NODIMC, A3/FLEX TBA 1890S NODIMC, A3/FLEX TBA 1400B NODIMC (See drawing on page: 1-172)					
010	2547406-0000		1	ROLLER	
030	90214-0303		4	SEALING RING, 18,6X35X2 MM	
050	3006268-0000		1	FLANGE	
070	3006269-0000		1	FLANGE	
A3/FLEX TPA 500SQ LIGHTCAP (See drawing on page: 1-170)					
010	2951499-0000		1	SQUEE-GEE ROLLER	
030	90214-0303		2	SEALING RING, 18,6X35X2 MM	
050	2921583-0000		1	FLANGE	
070	2921584-0000		1	FLANGE	
Common Parts					
020	2931911-0000		2	BEARING COVER	
040	90458-1704		2	BALL BEARING, 15X35X11 MM	
060	2921582-0000		1	SHAFT	
080	2931909-0000		2	CLAMPING PIECE	
090	90242-0270		1	O-RING 82,27X1,78 MM	
180	312105-0327		6	SCREW M6S ISO 4017 M5X12 A480	
190	315105-0153		6	WASHER BRB 6,4X12 RFR	
200	312105-0370		6	SCREW M6S ISO 4017 M6X20 A480	
210	312109-0374		2	SCREW M6S ISO 4017 M6X30 A480	
230	312605-0316		6	HEXAGON NUT, M6M M6 A280	
240	90459-1627		1	O-RING 114,02X1,78 MM	
300	90296-0091		1	LUBRICATION GREASE	

Machine Type | Group Description | Used-In | Group Number | Page No

SQUEE-GEE ROLLER

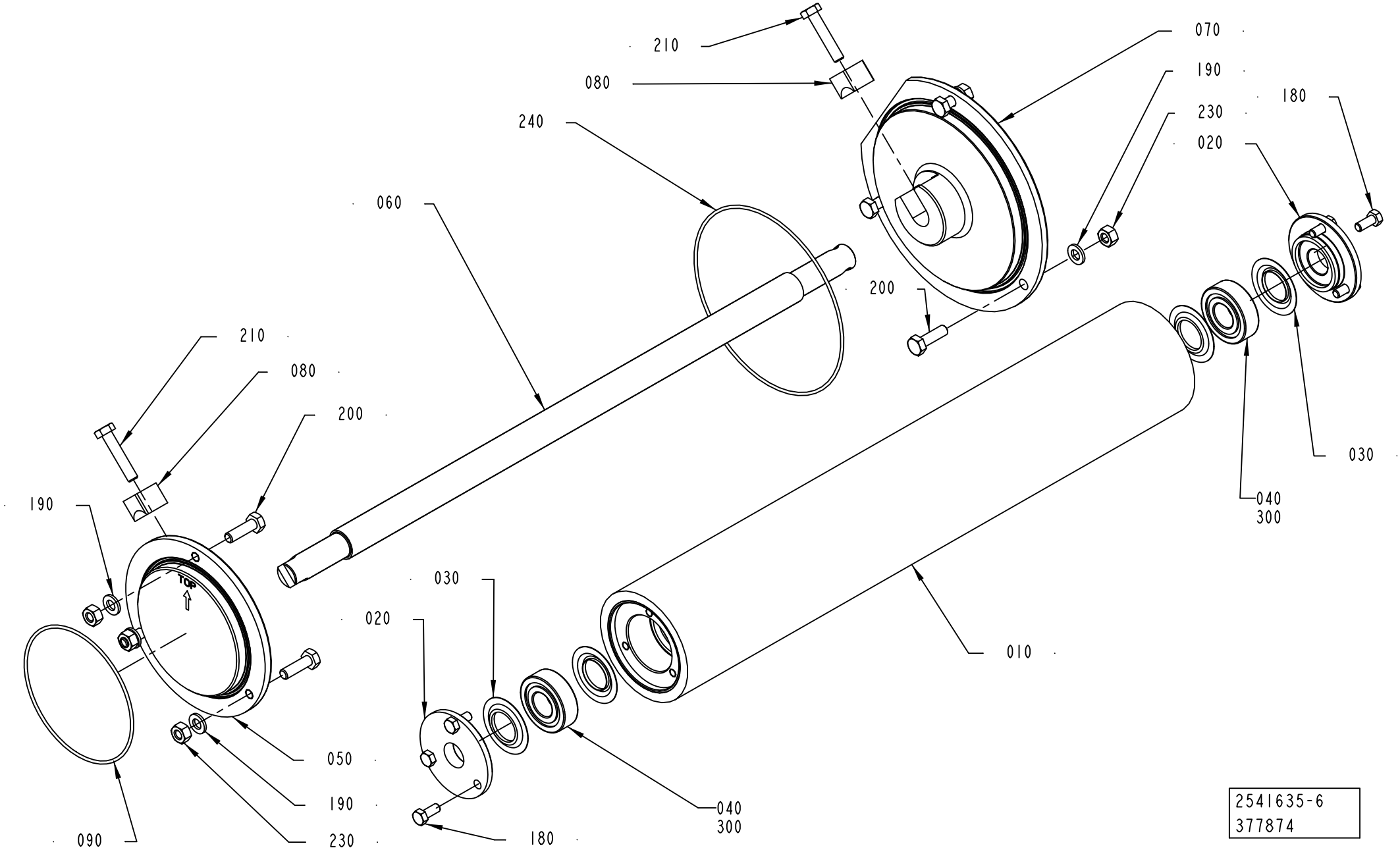

ECM: 391264 - 20090701
Group number: 2541635-0200
Assembly Drawing: 2541635-6_1_AA

This list covers pages from 1-170 to 1-173

Pos	Part No	UN	Qty	Description	Page No
A3/FLEX TBA 0200S NODIMC, A3/FLEX TBA 1000SQ NODIMC, A3/FLEX TBA 1000S NODIMC, A3/FLEX TBA 1000B NODIMC, A3/FLEX TBA 0500B NODIMC, A3/FLEX TPA 1000SQ NODIMC, A3/FLEX TBA 1500S NODIMC, A3/FLEX TBA 0200B NODIMC, A3/FLEX TBA 0250B NODIMC, A3/FLEX TBA 0330S NODIMC, A3/FLEX TPA 0330SQ NODIMC, A3/FLEX TPA 0500SQ NODIMC, A3/FLEX TBA 0250S NODIMC, A3/FLEX TBA 0200M NODIMC, A3/FLEX TBA 0500S NODIMC, A3/FLEX TPA 0200SQ NODIMC, A3/FLEX TPA 0250SQ NODIMC, A3/FLEX TPA 0750SQ NODIMC, A3/FLEX TBA 0200SQ NODIMC, A3/FLEX TBA 0250SQ NODIMC, A3/FLEX TGA 1000SQ NODIMC, A3/FLEX TBA 0500SQ NODIMC, A3/FLEX TGA 0500SQ NODIMC, A3/FLEX TGA 0750SQ NODIMC (See drawing on page: 1-172)					
010	1511769-0000		1	ROLLER	
030	90214-0303		4	SEALING RING, 18,6X35X2 MM	
050	3006266-0000		1	FLANGE	
070	3006267-0000		1	FLANGE	
A3/FLEX TBA 1000S LIGHTCAP (See drawing on page: 1-170)					
010	2528136-0000		1	SQUEE-GEE ROLLER	
030	90214-0303		2	SEALING RING, 18,6X35X2 MM	
050	2921583-0000		1	FLANGE	
070	2921584-0000		1	FLANGE	
A3/FLEX TBA 1000S STDA7, A3/FLEX TBA 1000B STDA7 (See drawing on page: 1-170)					
010	2528136-0000		1	SQUEE-GEE ROLLER	
030	90214-0303		2	SEALING RING, 18,6X35X2 MM	
050	3006266-0000		1	FLANGE	
070	3006267-0000		1	FLANGE	
A3/FLEX TBA 2000S NODIMC, A3/FLEX TBA 1890S NODIMC, A3/FLEX TBA 1400B NODIMC (See drawing on page: 1-172)					
010	2547406-0000		1	ROLLER	
030	90214-0303		4	SEALING RING, 18,6X35X2 MM	
050	3006268-0000		1	FLANGE	
070	3006269-0000		1	FLANGE	
A3/FLEX TPA 500SQ LIGHTCAP (See drawing on page: 1-170)					
010	2951499-0000		1	SQUEE-GEE ROLLER	
030	90214-0303		2	SEALING RING, 18,6X35X2 MM	
050	2921583-0000		1	FLANGE	
070	2921584-0000		1	FLANGE	
Common Parts					
020	2931911-0000		2	BEARING COVER	
040	90458-1704		2	BALL BEARING, 15X35X11 MM	
060	2921582-0000		1	SHAFT	
080	2931909-0000		2	CLAMPING PIECE	
090	90242-0270		1	O-RING 82,27X1,78 MM	
180	312105-0327		6	SCREW M6S ISO 4017 M5X12 A480	
190	315105-0153		6	WASHER BRB 6,4X12 RFR	
200	312105-0370		6	SCREW M6S ISO 4017 M6X20 A480	
210	312109-0374		2	SCREW M6S ISO 4017 M6X30 A480	
230	312605-0316		6	HEXAGON NUT, M6M M6 A280	
240	90459-1627		1	O-RING 114,02X1,78 MM	
300	90296-0091		1	LUBRICATION GREASE	

Machine Type | Group Description | Used-In | Group Number | Page No

CALENDER ROLLER

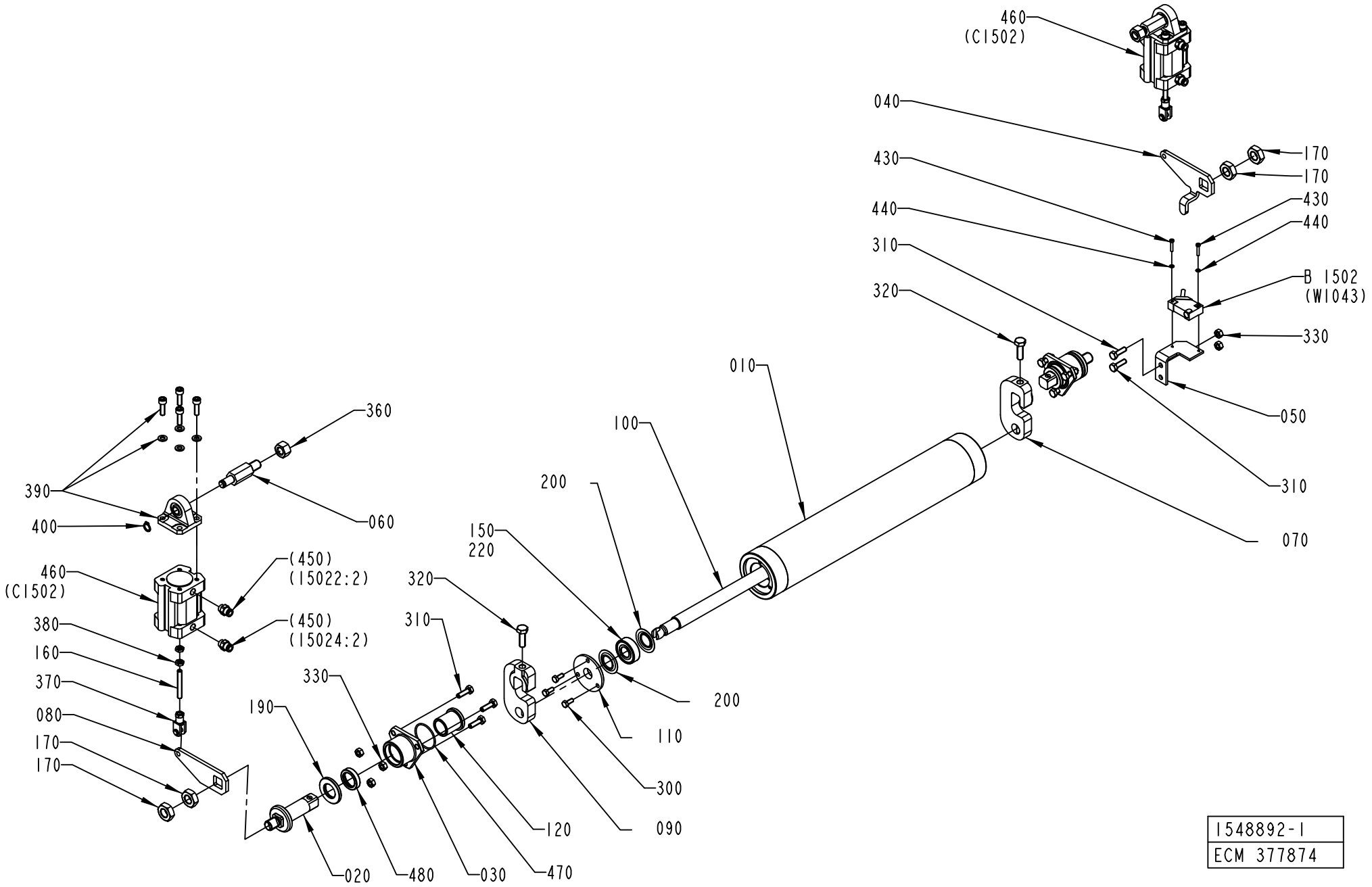

1548892-1
ECM 377874

ECM: 379848 - 20090401
Group number: 1548892-0100
Assembly Drawing: 1548892-1_1_AC

This list covers pages from 1-174 to 1-179

Pos	Part No	UN	Qty	Description	Page No
A3/FLEX TBA 0200S NODIMC, A3/FLEX TBA 1000S NODIMC, A3/FLEX TBA 1000B NODIMC, A3/FLEX TBA 0500B NODIMC, A3/FLEX TBA 0250S NODIMC, A3/FLEX TBA 0200M NODIMC (See drawing on page: 1-174)					
010	1538496-0000		1	ROLLER	
040	1498130-0000		1	PLATE	
060	1498132-0000		2	SHAFT	
070	2936482-0000		1	ARM	
080	1498134-0000		1	PLATE	
090	2936481-0000		1	ARM	
200	90214-0303		4	SEALING RING, 18,6X35X2 MM	
320	312105-0453		2	SCREW M6S ISO 4017 M8X25 A480	
390	90450-0756		2	BRACKET, REAR EYE 32	
400	90141-0016		2	RETAINING RING FOR SHAFT DIN 471 10 SS	
460	90458-0528		2	DOUBLE ACTING, COMPACT, CYL 32-25	
A3/FLEX TBA 1000S STDA7, A3/FLEX TBA 1000B STDA7, A3/FLEX TBA 1000S LIGHTCAP (See drawing on page: 1-178)					
010	2528136-0000		1	SQUEE-GEE ROLLER	
040	1498130-0000		1	PLATE	
060	1498132-0000		2	SHAFT	
070	2936482-0000		1	ARM	
080	1498134-0000		1	PLATE	
090	2936481-0000		1	ARM	
200	90214-0303		2	SEALING RING, 18,6X35X2 MM	
320	312105-0453		2	SCREW M6S ISO 4017 M8X25 A480	
390	90450-0756		2	BRACKET, REAR EYE 32	
400	90141-0016		2	RETAINING RING FOR SHAFT DIN 471 10 SS	
460	90458-0528		2	DOUBLE ACTING, COMPACT, CYL 32-25	
500	2763979-0000		8	SHIM	
A3/FLEX TBA 1000SQ NODIMC, A3/FLEX TPA 1000SQ NODIMC, A3/FLEX TBA 1500S NODIMC, A3/FLEX TBA 0200B NODIMC, A3/FLEX TBA 0250B NODIMC, A3/FLEX TBA 0330S NODIMC, A3/FLEX TPA 0330SQ NODIMC, A3/FLEX TPA 0500SQ NODIMC, A3/FLEX TBA 0500S NODIMC, A3/FLEX TPA 0200SQ NODIMC, A3/FLEX TPA 0250SQ NODIMC, A3/FLEX TPA 0750SQ NODIMC, A3/FLEX TBA 0200SQ NODIMC, A3/FLEX TBA 0250SQ NODIMC, A3/FLEX TGA 1000SQ NODIMC, A3/FLEX TBA 0500SQ NODIMC, A3/FLEX TGA 0500SQ NODIMC, A3/FLEX TGA 0750SQ NODIMC (See drawing on page: 1-174)					
010	1511769-0000		1	ROLLER	
040	1498130-0000		1	PLATE	
060	1498132-0000		2	SHAFT	
070	2936482-0000		1	ARM	
080	1498134-0000		1	PLATE	
090	2936481-0000		1	ARM	
200	90214-0303		4	SEALING RING, 18,6X35X2 MM	
320	312105-0453		2	SCREW M6S ISO 4017 M8X25 A480	
390	90450-0756		2	BRACKET, REAR EYE 32	
400	90141-0016		2	RETAINING RING FOR SHAFT DIN 471 10 SS	
460	90458-0528		2	DOUBLE ACTING, COMPACT, CYL 32-25	
A3/FLEX TBA 2000S NODIMC, A3/FLEX TBA 1890S NODIMC, A3/FLEX TBA 1400B NODIMC (See drawing on page: 1-176)					
010	2547406-0000		1	ROLLER	
040	2544883-0000		1	PLATE	
060	1498132-0000		2	SHAFT	
070	2544885-0000		1	ARM	
080	2544884-0000		1	PLATE	
090	2544886-0000		1	ARM	
200	90214-0303		4	SEALING RING, 18,6X35X2 MM	
320	312105-0451		2	SCREW M6S ISO 4017 M8X20 A480	
390	90450-0756		2	BRACKET, REAR EYE 32	
400	90141-0016		2	RETAINING RING FOR SHAFT DIN 471 10 SS	
460	90458-0528		2	DOUBLE ACTING, COMPACT, CYL 32-25	
A3/FLEX TPA 500SQ LIGHTCAP (See drawing on page: 1-178)					
010	2951499-0000		1	SQUEE-GEE ROLLER	
040	1498130-0000		1	PLATE	
060	1498132-0000		2	SHAFT	
070	2936482-0000		1	ARM	
080	1498134-0000		1	PLATE	
090	2936481-0000		1	ARM	
200	90214-0303		2	SEALING RING, 18,6X35X2 MM	
320	312105-0453		2	SCREW M6S ISO 4017 M8X25 A480	
390	90450-0756		2	BRACKET, REAR EYE 32	
400	90141-0016		2	RETAINING RING FOR SHAFT DIN 471 10 SS	
460	90458-0528		2	DOUBLE ACTING, COMPACT, CYL 32-25	
500	2763979-0000		8	SHIM	
Common Parts					
020	2532969-0000		2	SHAFT	
030	2541643-0000		2	FLANGE	
050	1498131-0000		1	BRACKET	
100	1498790-0000		1	SHAFT	
110	2931911-0000		2	BEARING COVER	
120	2541682-0000		2	BUSHING	
150	90458-1704		2	BALL BEARING, 15X35X11 MM	
160	90459-1728		2	SCREW ISO4029 M6X45 A4	
170	90099-0027		4	HEXAGON NUT, M14, DIN936	
190	2541681-0000		2	WASHER	
220	90296-0091		1	LUBRICATION GREASE	
300	312105-0327		6	SCREW M6S ISO 4017 M5X12 A480	
310	312105-0370		8	SCREW M6S ISO 4017 M6X20 A480	

Machine Type | Group Description | Used-In | Group Number | Page No

CALENDER ROLLER

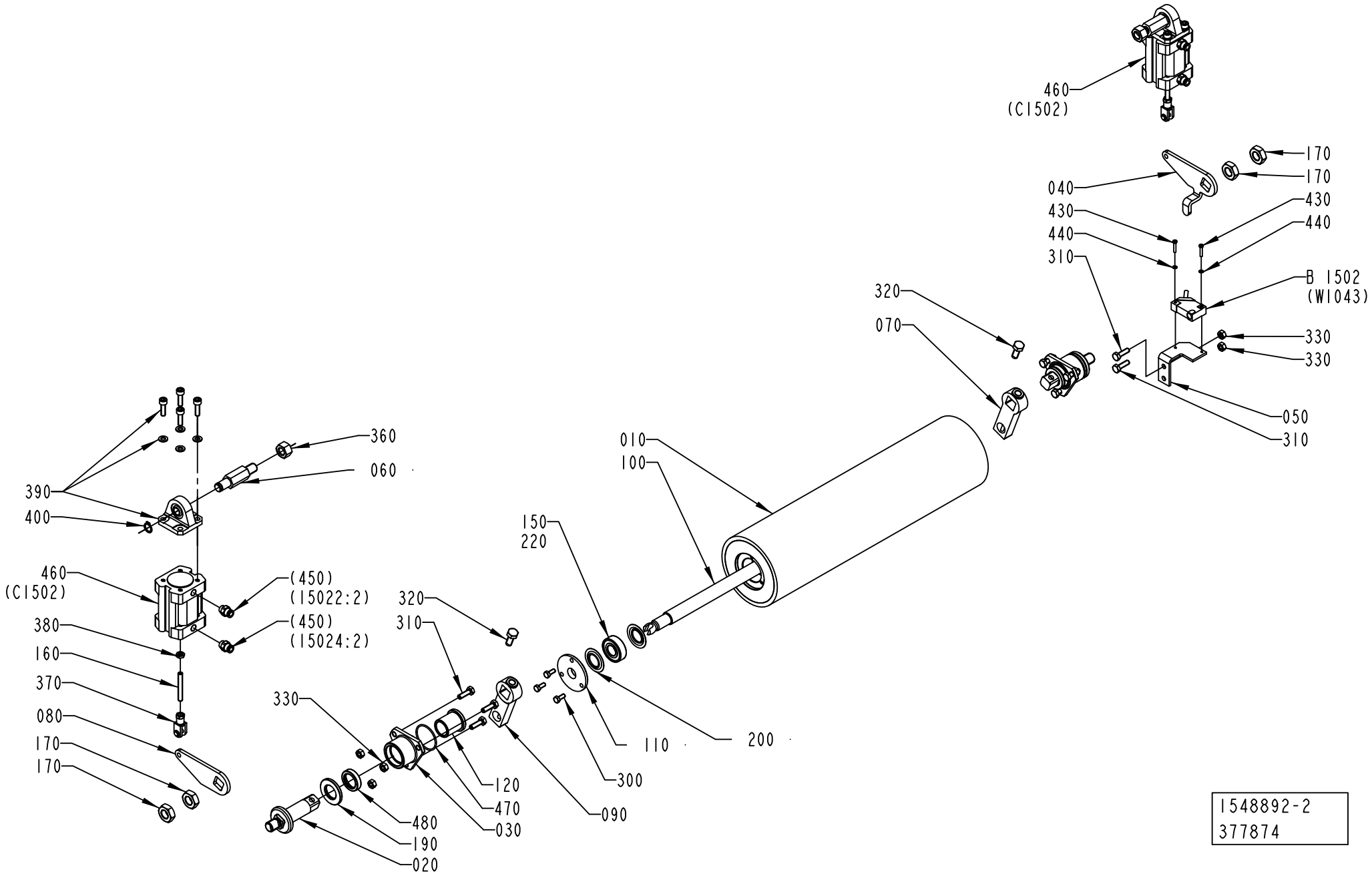

ECM: 379848 - 20090401
Group number: 1548892-0100
Assembly Drawing: 1548892-2_1_AC

This list covers pages from 1-174 to 1-179

Pos	Part No	UN	Qty	Description	Page No
Common Parts (Cont'd)					
330	312605-0316		8	HEXAGON NUT, M6M M6 A280	
360	312605-0322		2	HEXAGON NUT, M6M M12 A280	
370	90239-0489		2	ROD END, CLEVIS WITH AXLE M6X1,25	
380	312625-0316		4	HEXAGON THIN NUT, EN 24035 ML6M M6 A4	
430	312125-0228		2	SCREW ISO 1207 M3X16 A4	
440	315105-0124		2	WASHER BRB 3,2X6 RFR	
450	342722-0202		4	PIPE COUPLING 1/8" D=6MM	
470	315205-0716		2	O-RING 34,65X1,78 MM	
480	90458-0639		2	VARILIP 20X30X7 MM	
B1502	90044-0194		1	INDUCTIVE SENSOR IN5329	

Pos	Part No	UN	Qty	Description	Page No

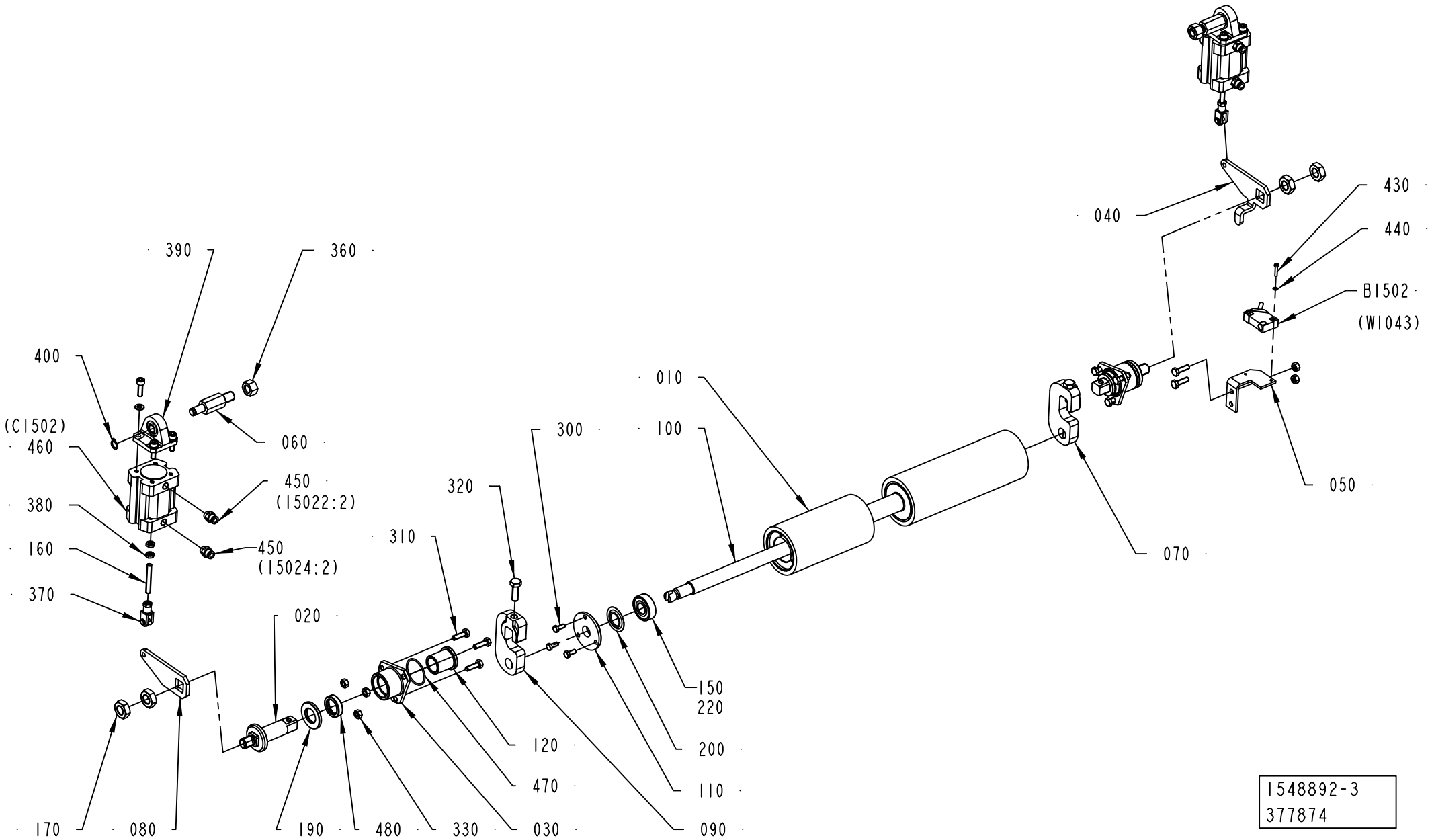

1548892-3
377874

ECM: 379848 - 20090401
Group number: 1548892-0100
Assembly Drawing: 1548892-3_1_AB

This list covers pages from 1-174 to 1-179

Pos	Part No	UN	Qty	Description	Page No
SEE PREVIOUS LISTS PAGES: 1-175, 1-177.					

Pos	Part No	UN	Qty	Description	Page No

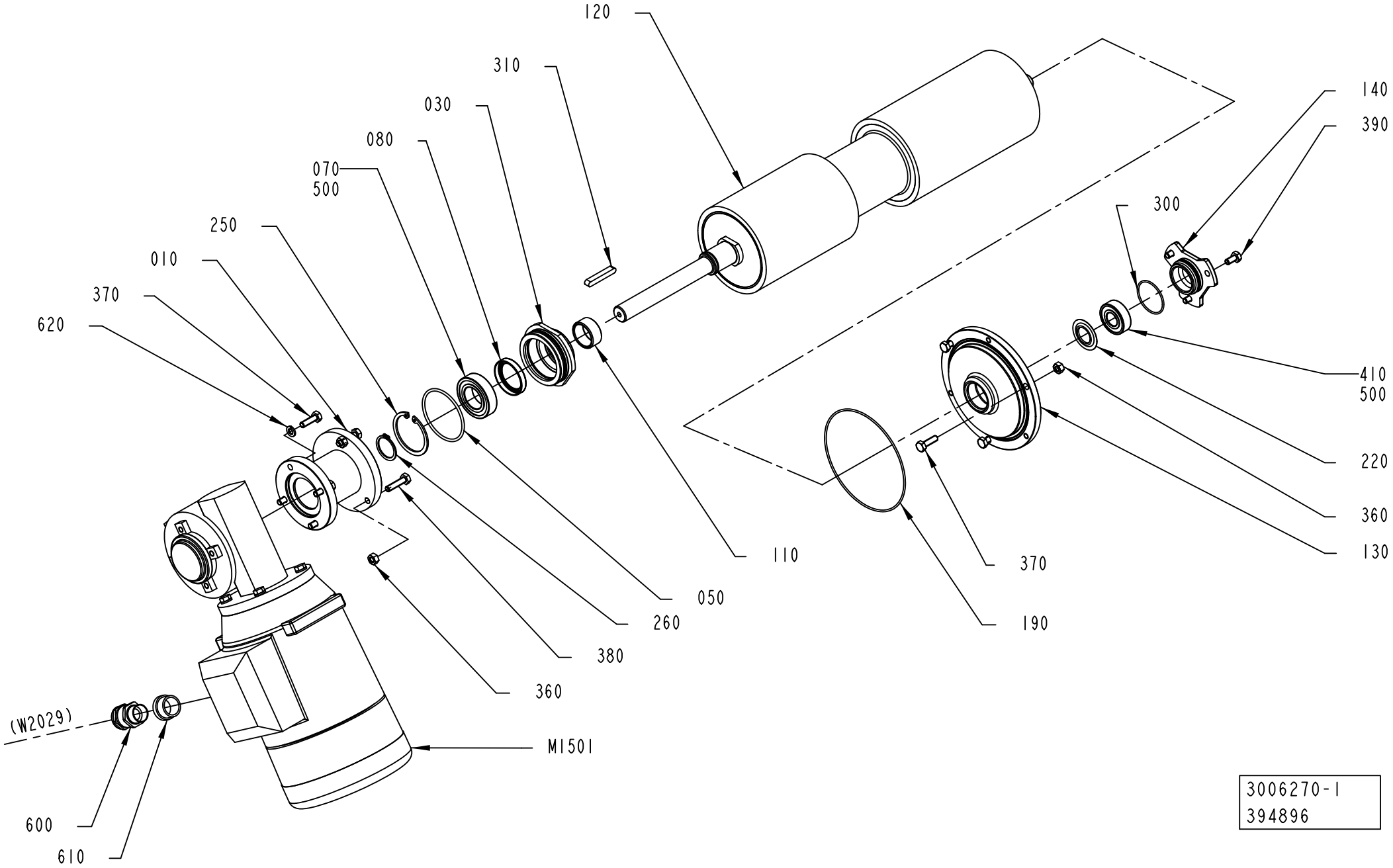

3006270-1
394896

ECM: 395156 - 20091001
Group number: 3006270-0100
Assembly Drawing: 3006270-1_1_AB

This list covers pages from 1-180 to 1-183

Pos	Part No	UN	Qty	Description	Page No
A3/FLEX NODIMC (See drawing on page: 1-182)					
120	3006271-0000		1	DRIVE ROLLER	
M1501	90459-1226		1	GEARS, WORM MOTOR VF 44P-10+BN71B 0.37KW	
A3/FLEX TBA 1000S STDA7, A3/FLEX TBA 1000B STDA7, A3/FLEX TBA 1000S LIGHTCAP (See drawing on page: 1-180)					
120	2951059-0000		1	RUBBER ROLLER	
M1501	90459-1226		1	GEARS, WORM MOTOR VF 44P-10+BN71B 0.37KW	
A3/FLEX TPA 500SQ LIGHTCAP (See drawing on page: 1-180)					
120	3006272-0000		1	DRIVE ROLLER	
M1501	90459-1226		1	GEARS, WORM MOTOR VF 44P-10+BN71B 0.37KW	
Common Parts					
010	2951062-0000		1	SUPPORT FLANGE	
030	2931917-0000		1	BEARING SEAT	
050	315206-0739		1	O-RING 55,25X2,62 MM	
070	90214-0165		1	BALL BEARING, 25X47X12 MM	
080	90459-1650		1	VARILIP 30X40X7 MM	
110	1548751-0000		1	BUSHING	
130	2951057-0000		1	FLANGE	
140	2951058-0000		1	LID	
190	90459-1627		1	O-RING 114,02X1,78 MM	
220	90214-0303		1	SEALING RING, 18,6X35X2 MM	
250	315753-0130		1	RETAINING RING FOR BORE DIN 472 47 A2	
260	315751-0119		1	RETAINING RING FOR SHAFT DIN 471 25 SS	
300	315204-0123		1	O-RING 35,1X1,6 MM	
310	315705-0239		1	PARALLEL KEY W. ROUND ENDS 6X6X40 MM	
360	312605-0316		6	HEXAGON NUT, M6M M6 A280	
370	312105-0370		7	SCREW M6S ISO 4017 M6X20 A480	
380	312105-0372		3	SCREW M6S ISO 4017 M6X25 A480	
390	312105-0366		3	SCREW M6S ISO 4017 M6X12 A480	
410	90458-1704		1	BALL BEARING, 15X35X11 MM	
500	90296-0091		1	LUBRICATION GREASE	
600	90012-0137		1	GLAND, EXTENDED WITH INSERT, PG11	
610	90089-0003		1	REDUCING SLEEVE, PR22,5/PR18,6	
620	315402-0156		4	LOCK WASHER FBB 6,5	

Pos	Part No	UN	Qty	Description	Page No

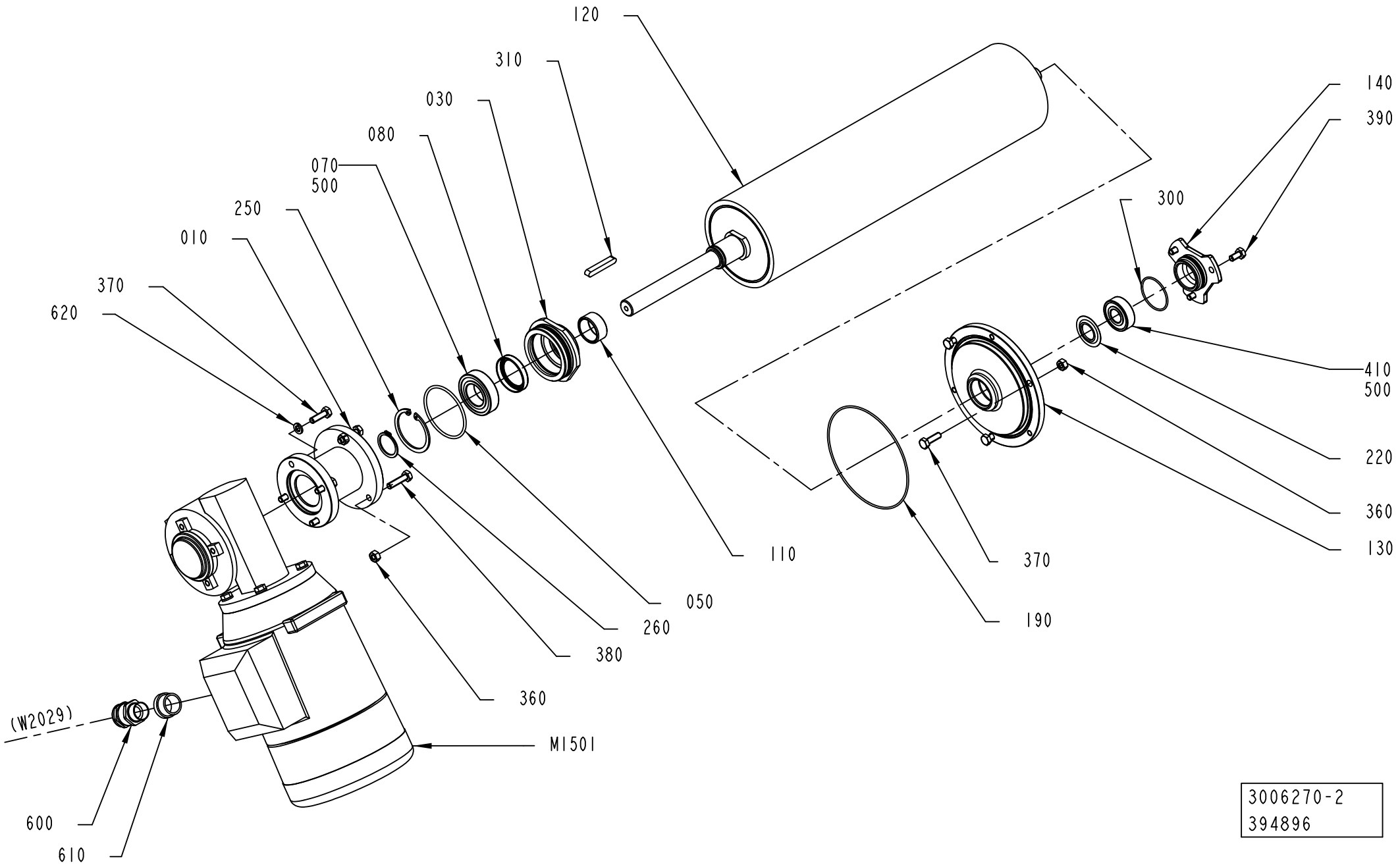

3006270-2
394896

Pos	Part No	UN	Qty	Description	Page No
A3/FLEX NODIMC (See drawing on page: 1-182)					
120	3006271-0000		1	DRIVE ROLLER	
M1501	90459-1226		1	GEARS, WORM MOTOR VF 44P-10+BN71B 0.37KW	
A3/FLEX TBA 1000S STDA7, A3/FLEX TBA 1000B STDA7, A3/FLEX TBA 1000S LIGHTCAP (See drawing on page: 1-180)					
120	2951059-0000		1	RUBBER ROLLER	
M1501	90459-1226		1	GEARS, WORM MOTOR VF 44P-10+BN71B 0.37KW	
A3/FLEX TPA 500SQ LIGHTCAP (See drawing on page: 1-180)					
120	3006272-0000		1	DRIVE ROLLER	
M1501	90459-1226		1	GEARS, WORM MOTOR VF 44P-10+BN71B 0.37KW	
Common Parts					
010	2951062-0000		1	SUPPORT FLANGE	
030	2931917-0000		1	BEARING SEAT	
050	315206-0739		1	O-RING 55,25X2,62 MM	
070	90214-0165		1	BALL BEARING, 25X47X12 MM	
080	90459-1650		1	VARILIP 30X40X7 MM	
110	1548751-0000		1	BUSHING	
130	2951057-0000		1	FLANGE	
140	2951058-0000		1	LID	
190	90459-1627		1	O-RING 114,02X1,78 MM	
220	90214-0303		1	SEALING RING, 18,6X35X2 MM	
250	315753-0130		1	RETAINING RING FOR BORE DIN 472 47 A2	
260	315751-0119		1	RETAINING RING FOR SHAFT DIN 471 25 SS	
300	315204-0123		1	O-RING 35,1X1,6 MM	
310	315705-0239		1	PARALLEL KEY W. ROUND ENDS 6X6X40 MM	
360	312605-0316		6	HEXAGON NUT, M6M M6 A280	
370	312105-0370		7	SCREW M6S ISO 4017 M6X20 A480	
380	312105-0372		3	SCREW M6S ISO 4017 M6X25 A480	
390	312105-0366		3	SCREW M6S ISO 4017 M6X12 A480	
410	90458-1704		1	BALL BEARING, 15X35X11 MM	
500	90296-0091		1	LUBRICATION GREASE	
600	90012-0137		1	GLAND, EXTENDED WITH INSERT, PG11	
610	90089-0003		1	REDUCING SLEEVE, PR22,5/PR18,6	
620	315402-0156		4	LOCK WASHER FBB 6,5	

Pos	Part No	UN	Qty	Description	Page No

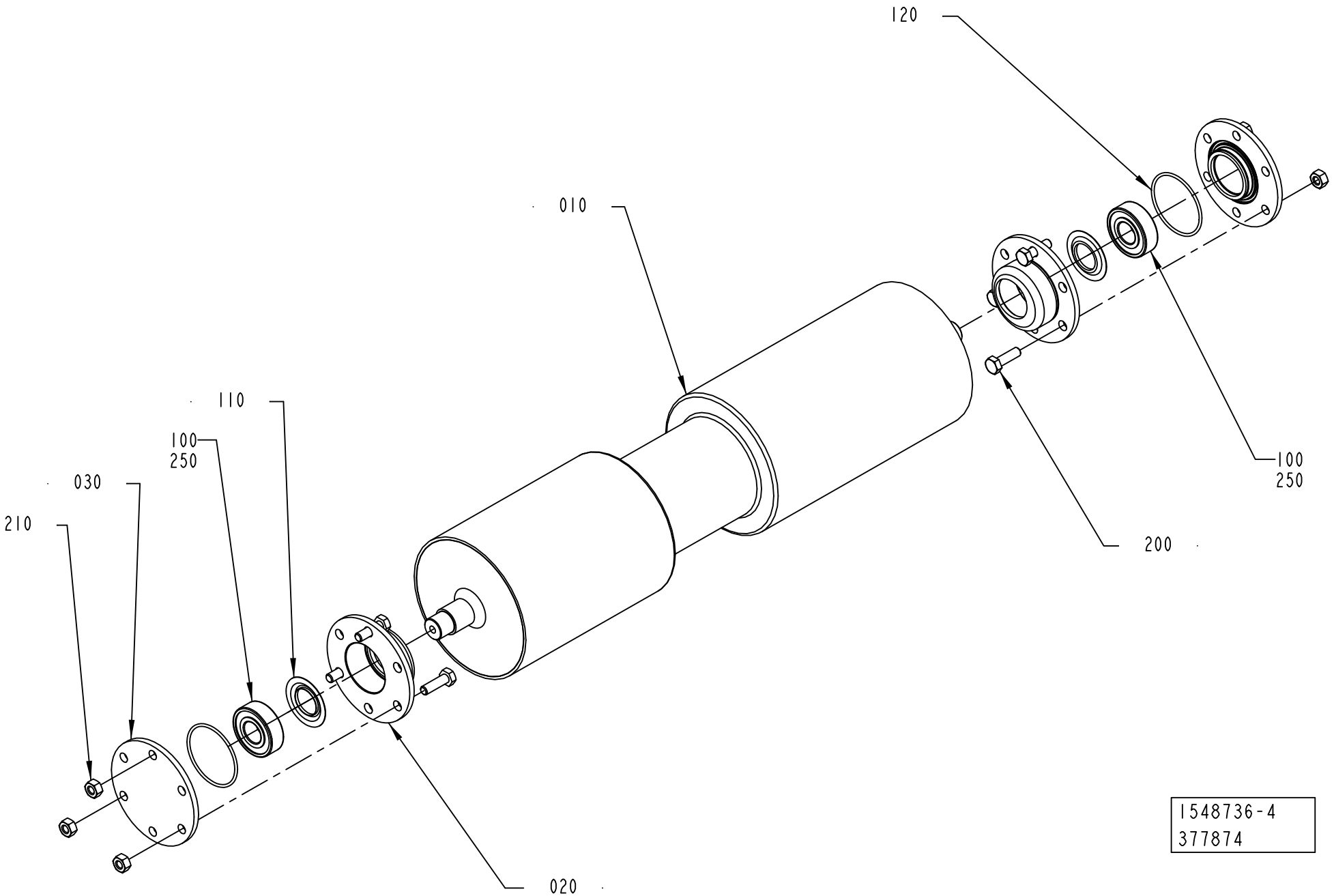
120
010
110
100
250
030
210
100
250
200
020
1548736-4
377874

ECM: 409724 - 20091002
Group number: 1548736-0200
Assembly Drawing: 1548736-4_1_AA

This list covers pages from 1-184 to 1-189

Pos	Part No	UN	Qty	Description	Page No
NOMOLDEDCAP (See drawing on page: 1-186)					
010	3008105-0000		1	BENDING ROLLER	
020	3008106-0000		2	BEARING SEAT	
030	3008107-0000		2	LID	
TBA 1000S LIGHTCAP (See drawing on page: 1-184)					
010	2931913-0000		1	BENDING ROLLER	
020	2931912-0000		2	BEARING SEAT	
030	2931914-0000		2	BEARING COVER	
TBA 1000S STDA7, TBA 1000B STDA7, TBA 1000M STDA7 (See drawing on page: 1-188)					
010	2931913-0000		1	BENDING ROLLER	
020	3008106-0000		2	BEARING SEAT	
030	3008107-0000		2	LID	
TPA 500SQ LIGHTCAP, TBA 1000E LIGHTCAP 30 (See drawing on page: 1-184)					
010	3008108-0000		1	BENDING ROLLER	
020	2931912-0000		2	BEARING SEAT	
030	2931914-0000		2	BEARING COVER	
Common Parts					
100	90458-1704		2	BALL BEARING, 15X35X11 MM	
110	90214-0303		2	SEALING RING, 18,6X35X2 MM	
120	315205-0802		2	O-RING 41,0X1,78 MM	
200	312105-0370		6	SCREW M6S ISO 4017 M6X20 A480	
210	312605-0316		6	HEXAGON NUT, M6M M6 A280	
250	90296-0091		1	LUBRICATION GREASE	

Pos	Part No	UN	Qty	Description	Page No

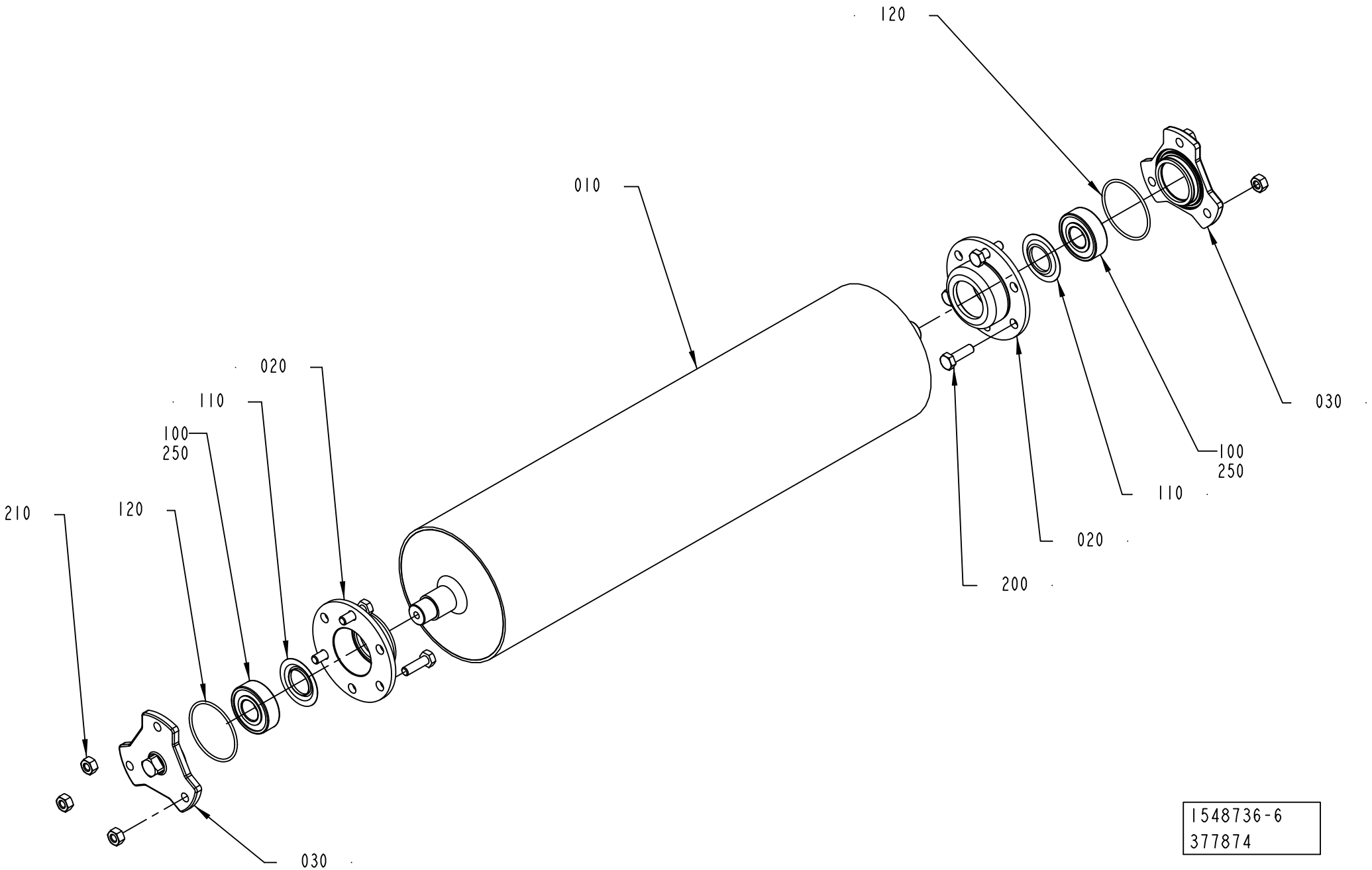
120
010
020
110
100
250
210
120
030
100
250
110
020
200
030
1548736-6
377874

ECM: 409724 - 20091002
Group number: 1548736-0200
Assembly Drawing: 1548736-6_1_AA

This list covers pages from 1-184 to 1-189

Pos	Part No	UN	Qty	Description	Page No
NOMOLDEDCAP (See drawing on page: 1-186)					
010	3008105-0000		1	BENDING ROLLER	
020	3008106-0000		2	BEARING SEAT	
030	3008107-0000		2	LID	
TBA 1000S LIGHTCAP (See drawing on page: 1-184)					
010	2931913-0000		1	BENDING ROLLER	
020	2931912-0000		2	BEARING SEAT	
030	2931914-0000		2	BEARING COVER	
TBA 1000S STDA7, TBA 1000B STDA7, TBA 1000M STDA7 (See drawing on page: 1-188)					
010	2931913-0000		1	BENDING ROLLER	
020	3008106-0000		2	BEARING SEAT	
030	3008107-0000		2	LID	
TPA 500SQ LIGHTCAP, TBA 1000E LIGHTCAP 30 (See drawing on page: 1-184)					
010	3008108-0000		1	BENDING ROLLER	
020	2931912-0000		2	BEARING SEAT	
030	2931914-0000		2	BEARING COVER	
Common Parts					
100	90458-1704		2	BALL BEARING, 15X35X11 MM	
110	90214-0303		2	SEALING RING, 18,6X35X2 MM	
120	315205-0802		2	O-RING 41,0X1,78 MM	
200	312105-0370		6	SCREW M6S ISO 4017 M6X20 A480	
210	312605-0316		6	HEXAGON NUT, M6M M6 A280	
250	90296-0091		1	LUBRICATION GREASE	

Pos	Part No	UN	Qty	Description	Page No

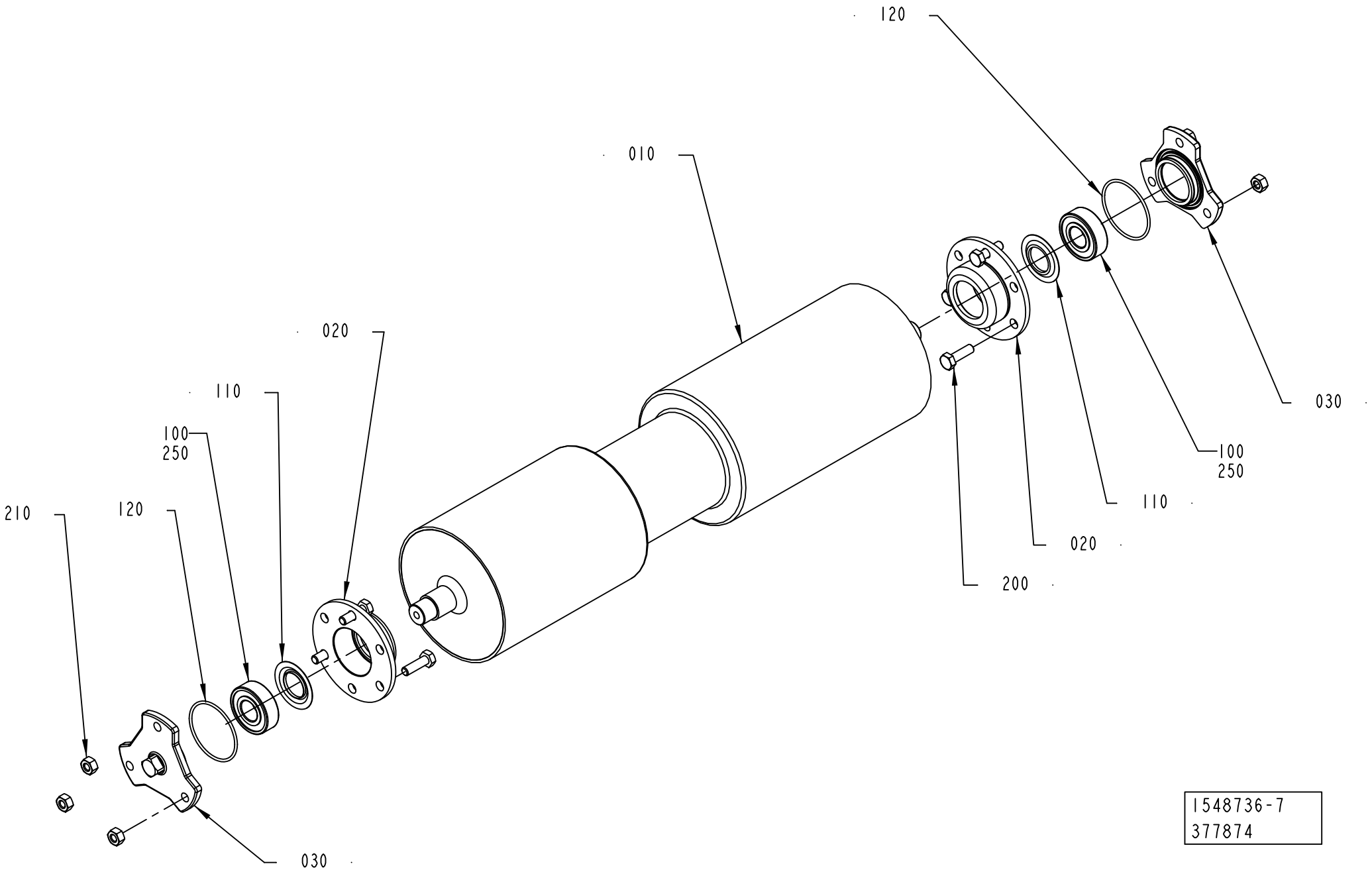
120
010
020
110
100
250
210
120
030
100
250
110
020
200
030
1548736-7
377874

ECM: 409724 - 20091002
Group number: 1548736-0200
Assembly Drawing: 1548736-7_1_AA

This list covers pages from 1-184 to 1-189

Pos	Part No	UN	Qty	Description	Page No
NOMOLDEDCAP (See drawing on page: 1-186)					
010	3008105-0000		1	BENDING ROLLER	
020	3008106-0000		2	BEARING SEAT	
030	3008107-0000		2	LID	
TBA 1000S LIGHTCAP (See drawing on page: 1-184)					
010	2931913-0000		1	BENDING ROLLER	
020	2931912-0000		2	BEARING SEAT	
030	2931914-0000		2	BEARING COVER	
TBA 1000S STDA7, TBA 1000B STDA7, TBA 1000M STDA7 (See drawing on page: 1-188)					
010	2931913-0000		1	BENDING ROLLER	
020	3008106-0000		2	BEARING SEAT	
030	3008107-0000		2	LID	
TPA 500SQ LIGHTCAP, TBA 1000E LIGHTCAP 30 (See drawing on page: 1-184)					
010	3008108-0000		1	BENDING ROLLER	
020	2931912-0000		2	BEARING SEAT	
030	2931914-0000		2	BEARING COVER	
Common Parts					
100	90458-1704		2	BALL BEARING, 15X35X11 MM	
110	90214-0303		2	SEALING RING, 18,6X35X2 MM	
120	315205-0802		2	O-RING 41,0X1,78 MM	
200	312105-0370		6	SCREW M6S ISO 4017 M6X20 A480	
210	312605-0316		6	HEXAGON NUT, M6M M6 A280	
250	90296-0091		1	LUBRICATION GREASE	

Pos	Part No	UN	Qty	Description	Page No

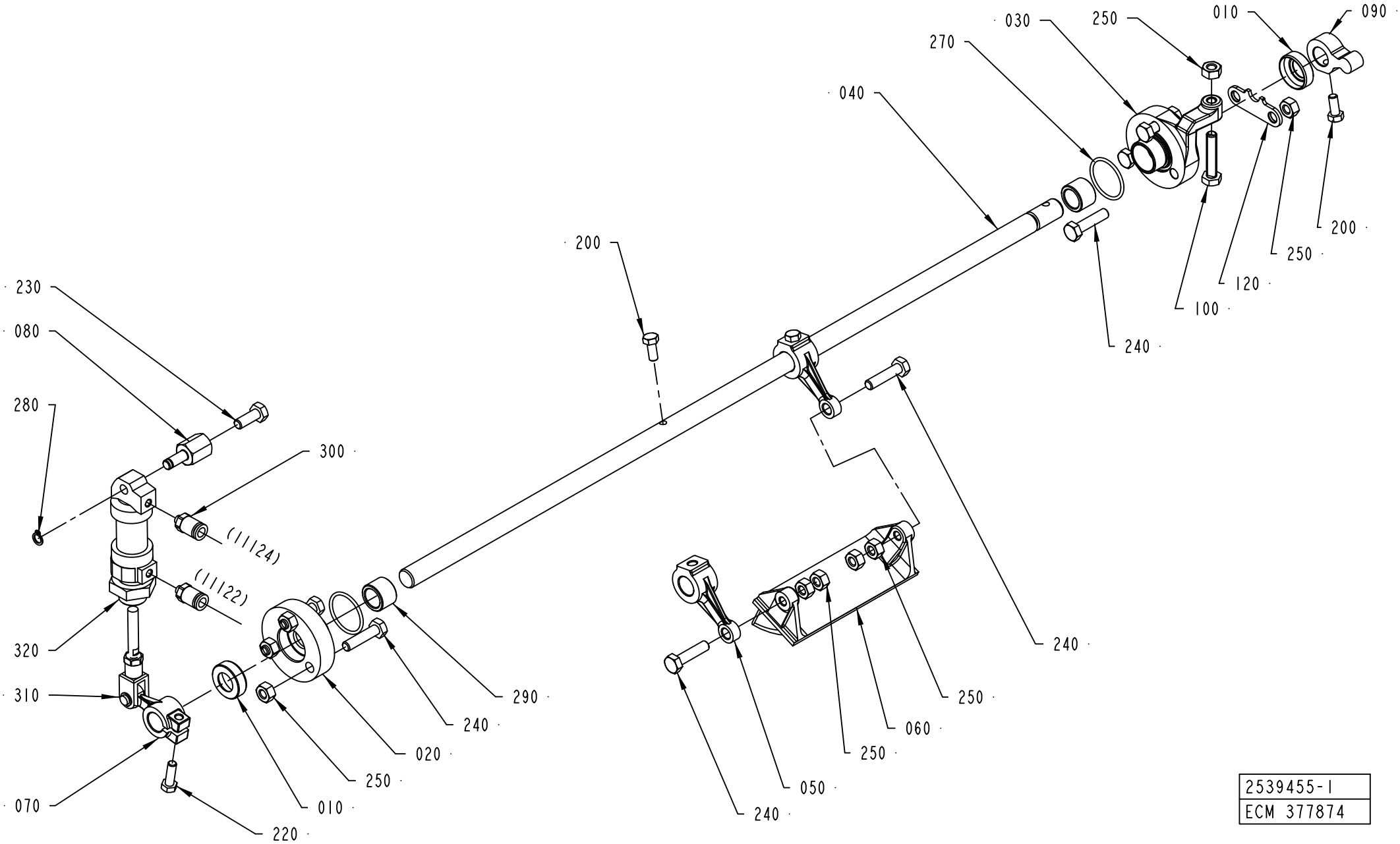
010
090
030
250
270
040
200
230
080
280
300
(11124)
(11122)
320
310
070
220
010
250
020
240
290
240
100
120
250
200
240
250
060
250
050
240
2539455-1
ECM 377874

ECM: 387762 - 20090402
Group number: 2539455-0100
Assembly Drawing: 2539455-1_1_AE

Pos	Part No	UN	Qty	Description	Page No
A3/FLEX					
060	2526851-0000		1	SHUTTER	
Common Parts					
010	2541661-0000		2	LID	
020	2945036-0000		1	FLANGE	
030	2945037-0000		1	FLANGE	
040	2526850-0000		1	SHAFT	
050	2526842-0000		2	LINK	
070	2526820-0000		1	LINK	
080	1523185-0000		1	AXLE PIN	
090	1538163-0000		1	LEVER	
100	312109-0374		1	SCREW M6S ISO 4017 M6X30 A480	
120	2526849-0000		1	PLATE	
200	312105-0327		3	SCREW M6S ISO 4017 M5X12 A480	
220	312105-0329		1	SCREW M6S ISO 4017 M5X16 A480	
230	312105-0368		1	SCREW M6S ISO 4017 M6X16 A480	
240	312105-0372		8	SCREW M6S ISO 4017 M6X25 A480	
250	312605-0316		11	HEXAGON NUT, M6M M6 A280	
270	315205-0709		2	O-RING 23,52X1,78 MM	
280	315751-0103		1	RETAINING RING FOR SHAFT DIN 471 6 SS	
290	2999045-0000		2	BUSHING	
300	342722-0197		2	STRAIGHT COUPLING	
310	90239-0489		1	ROD END, CLEVIS WITH AXLE M6X1,25	
320	90239-0841		1	DOUBLE ACTING, MINI-ISO, CYL. 16-25	

Pos	Part No	UN	Qty	Description	Page No

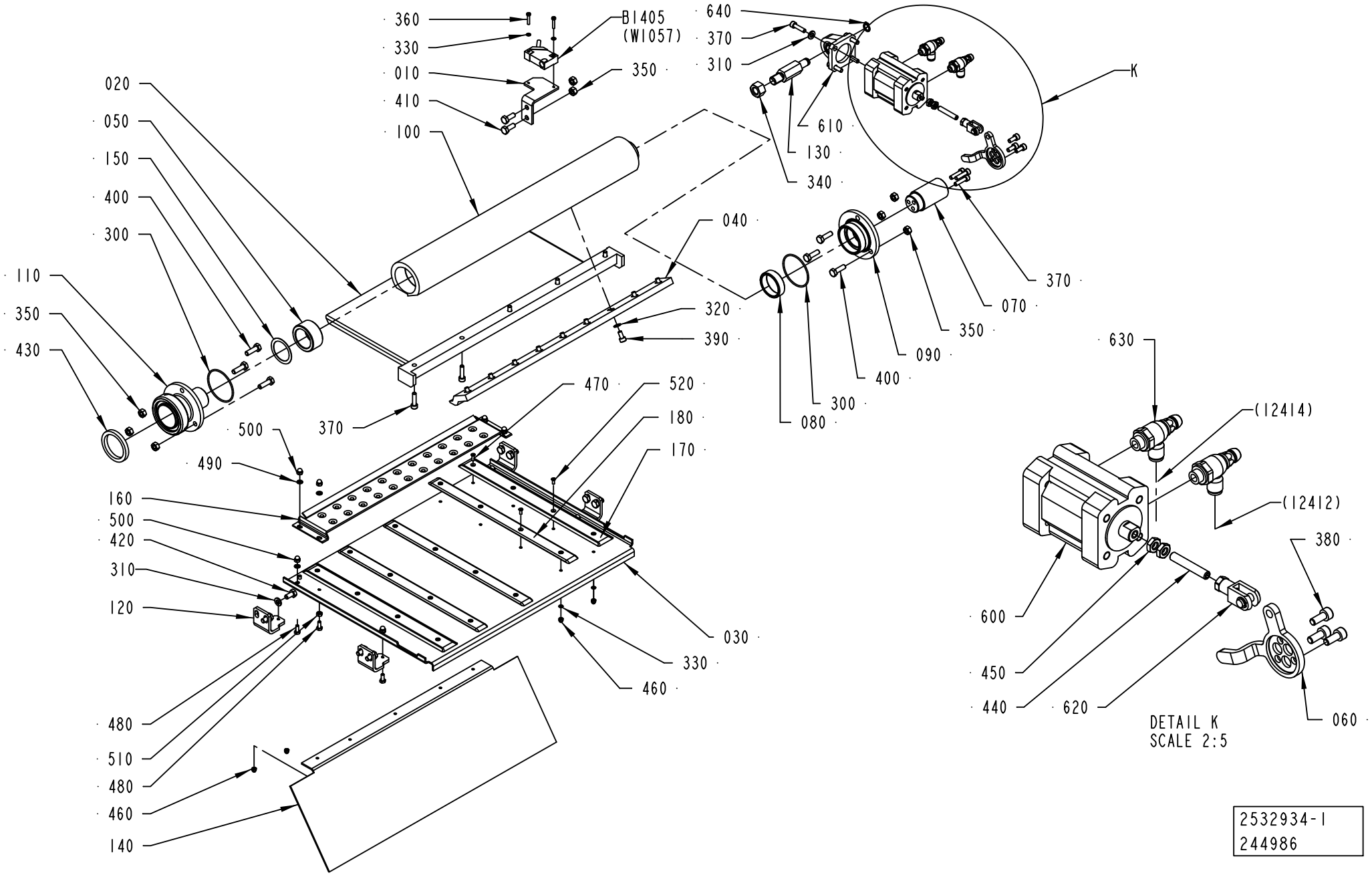
360
330
010
410
100
B1405
(W1057)
350
640
370
310
K
610
130
340
020
050
150
400
300
110
350
430
040
320
390
370
470
520
180
170
500
490
160
500
420
310
120
480
510
480
460
140
030
330
460
080
300
400
090
350
070
370
630
(12414)
(12412)
380
600
450
440
620
060
DETAIL K
SCALE 2:5
2532934-1
244986

ECM: 359126 - 20081002
Group number: 2532934-0100
Assembly Drawing: 2532934-1_1_AD

This list covers pages from 1-192 to 1-197

Pos	Part No	UN	Qty	Description	Page No
A3/FLEX TBA 0200S NODIMC, A3/FLEX TBA 1000SQ NODIMC, A3/FLEX TBA 1000S NODIMC, A3/FLEX TBA 1000B NODIMC, A3/FLEX TBA 0500B NODIMC, A3/FLEX TPA 1000SQ NODIMC, A3/FLEX TBA 1500S NODIMC, A3/FLEX TBA 0200B NODIMC, A3/FLEX TBA 0250B NODIMC, A3/FLEX TBA 0330S NODIMC, A3/FLEX TPA 0330SQ NODIMC, A3/FLEX TPA 0500SQ NODIMC, A3/FLEX TBA 0250S NODIMC, A3/FLEX TBA 0200M NODIMC, A3/FLEX TBA 0500S NODIMC, A3/FLEX TPA 0200SQ NODIMC, A3/FLEX TPA 0250SQ NODIMC, A3/FLEX TPA 0750SQ NODIMC, A3/FLEX TBA 0200SQ NODIMC, A3/FLEX TBA 0250SQ NODIMC, A3/FLEX TGA 1000SQ NODIMC, A3/FLEX TBA 0500SQ NODIMC, A3/FLEX TGA 0500SQ NODIMC, A3/FLEX TGA 0750SQ NODIMC (See drawing on page: 1-192)					
020	2532916-0000		1	AIR GUIDE	
030	2603823-0000		1	BOTTOM PLATE	
040	2509681-0000		1	RAIL	
120	2532918-0000		4	HOLDER	
140	2532919-0000		1	PLATE	
160	2603824-0000		1	COUNTER PLATE	
170	2603546-0000		2	SLIDE PLATE	
180	2603630-0000		3	SLIDE PLATE	
330	315105-0124		22	WASHER BRB 3,2X6 RFR	
460	312705-0310		20	NUT HEX. DOMED CAP MHM-6 M3 A2	
470	312145-0224		5	SCREW ISO 2009 MFS M3X10 A4	
520	312145-0222		15	SCREW ISO 2009 MFS M3X8 A4	
A3/FLEX TBA 1000S LIGHTCAP (See drawing on page: 1-194)					
020	2532916-0000		1	AIR GUIDE	
030	2716441-0000		1	BOTTOM PLATE	
040	2509681-0000		1	RAIL	
120	2532918-0000		4	HOLDER	
140	2716442-0000		1	PLATE	
160	2603824-0000		1	COUNTER PLATE	
180	2603630-0000		2	SLIDE PLATE	
190	2607440-0000		1	SLIDE PLATE	
330	315105-0124		14	WASHER BRB 3,2X6 RFR	
460	312705-0310		12	NUT HEX. DOMED CAP MHM-6 M3 A2	
470	312145-0224		2	SCREW ISO 2009 MFS M3X10 A4	
520	312145-0222		10	SCREW ISO 2009 MFS M3X8 A4	
A3/FLEX TBA 1000S STDA7, A3/FLEX TBA 1000B STDA7 (See drawing on page: 1-194)					
020	2532916-0000		1	AIR GUIDE	
030	2607087-0000		1	BOTTOM PLATE	
040	2509681-0000		1	RAIL	
120	2532918-0000		4	HOLDER	
140	2532922-0000		1	PLATE	
160	2603824-0000		1	COUNTER PLATE	
180	2603630-0000		2	SLIDE PLATE	
190	2607440-0000		1	SLIDE PLATE	
330	315105-0124		14	WASHER BRB 3,2X6 RFR	
460	312705-0310		12	NUT HEX. DOMED CAP MHM-6 M3 A2	
470	312145-0224		2	SCREW ISO 2009 MFS M3X10 A4	
520	312145-0222		10	SCREW ISO 2009 MFS M3X8 A4	
A3/FLEX TBA 2000S NODIMC, A3/FLEX TBA 1890S NODIMC, A3/FLEX TBA 1400B NODIMC (See drawing on page: 1-196)					
020	2582651-0000		1	AIR GUIDE	
030	2582652-0000		1	AIR GUIDE	
040	2594601-0000		1	RAIL	
120	2582655-0000		4	HOLDER	
140	2582654-0000		1	PLATE	
160	2657886-0000		1	COUNTER PLATE	
170	2603546-0000		2	SLIDE PLATE	
180	2603630-0000		3	SLIDE PLATE	
330	315105-0124		22	WASHER BRB 3,2X6 RFR	
460	312705-0310		20	NUT HEX. DOMED CAP MHM-6 M3 A2	
470	312145-0224		5	SCREW ISO 2009 MFS M3X10 A4	
520	312145-0222		15	SCREW ISO 2009 MFS M3X8 A4	
650	312105-0291		2	SCREW M6S ISO 4017 M4X12 A470	
A3/FLEX TPA 500SQ LIGHTCAP (See drawing on page: 1-194)					
020	2532916-0000		1	AIR GUIDE	
030	2951500-0000		1	PLATE	
040	2509681-0000		1	RAIL	
120	2532918-0000		4	HOLDER	
140	2951504-0000		1	PLATE	
160	2603824-0000		1	COUNTER PLATE	
180	2603630-0000		2	SLIDE PLATE	
190	2607440-0000		1	SLIDE PLATE	
330	315105-0124		14	WASHER BRB 3,2X6 RFR	
460	312705-0310		12	NUT HEX. DOMED CAP MHM-6 M3 A2	
470	312145-0224		2	SCREW ISO 2009 MFS M3X10 A4	
520	312145-0222		10	SCREW ISO 2009 MFS M3X8 A4	
Common Parts					
010	2509674-0000		1	BRACKET	
050	1519166-0000		1	BUSHING	
060	1519163-0000		1	ARM	
070	1519160-0000		1	SHAFT	
080	1519159-0000		1	BUSHING	
090	1519158-0000		1	LID	
100	1519156-0000		1	AIR DISTRIBUTOR	
110	1532231-0000		1	CONNECTION	
130	1498132-0000		1	SHAFT	

Machine Type | Group Description | Used-In | Group Number | Page No

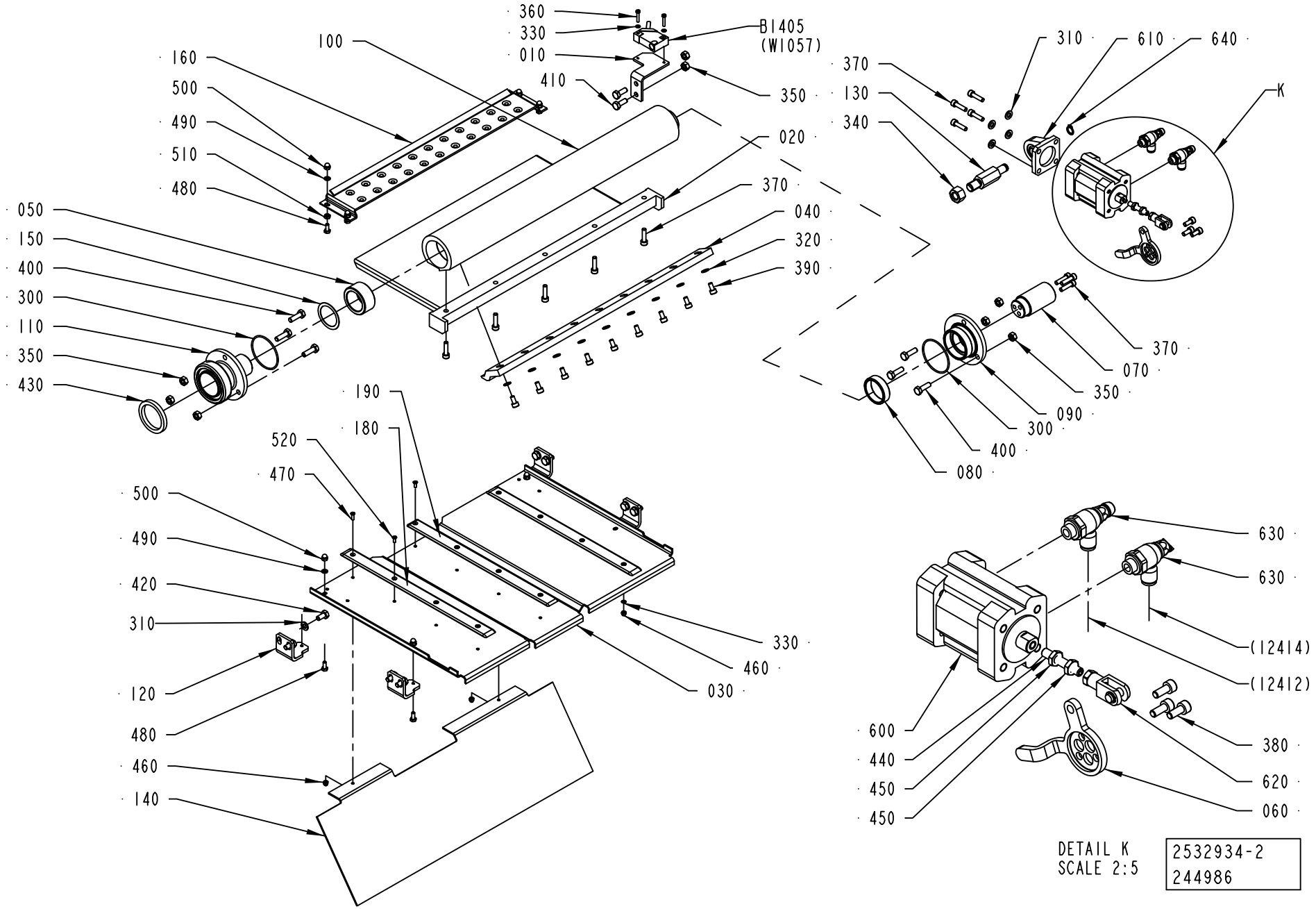

DETAIL K
SCALE 2:5

2532934-2
244986

Pos	Part No	UN	Qty	Description	Page No
Common Parts (Cont'd)					
150	2532915-0000		2	WASHER	
300	315205-0804		2	O-RING 47,35X1,78 MM	
310	315105-0153		12	WASHER BRB 6,4X12 RFR	
320	315105-0146		9	WASHER BRB 5,3X10 RFR	
340	312605-0322		1	HEXAGON NUT, M6M M12 A280	
350	312605-0316		8	HEXAGON NUT, M6M M6 A280	
360	312125-0228		2	SCREW ISO 1207 M3X16 A4	
370	312115-0331		12	SCREW ISO4762 M5X20 A4 80	
380	312115-0327		3	SCREW ISO4762 M5X12 A4 80	
390	312115-0325		9	SCREW ISO4762 M5X10 A4 80	
400	312105-0370		6	SCREW M6S ISO 4017 M6X20 A480	
410	312105-0368		2	SCREW M6S ISO 4017 M6X16 A480	
420	312105-0366		8	SCREW M6S ISO 4017 M6X12 A480	
430	12242-0003		1	GASKET 48X38X5,5	
440	312318-0376		1	SCREW ISO4029 M6X35 A4	
450	312625-0316		2	HEXAGON THIN NUT, EN 24035 ML6M M6 A4	
480	312105-0289		8	SCREW M6S H4X10 A4 70 ISO4017/DIN933	
490	315105-0136		8	WASHER BRB 4,3X8 RFR	
500	312705-0312		8	NUT HEX. DOMED CAP MHM-6 M4 A280	
510	312605-0312		4	HEXAGON NUT, M6M M4 A280	
600	90458-0528		1	DOUBLE ACTING, COMPACT, CYL 32-25	
610	90450-0756		1	BRACKET, REAR EYE 32	
620	90239-0489		1	ROD END, CLEVIS WITH AXLE M6X1,25	
630	90235-0846		2	THROTTLE CHECK VALVE G1/8", MANUAL, 6	
640	90141-0016		1	RETAINING RING FOR SHAFT DIN 471 10 SS	
B1405	90044-0194		1	INDUCTIVE SENSOR IN5329	

Pos	Part No	UN	Qty	Description	Page No

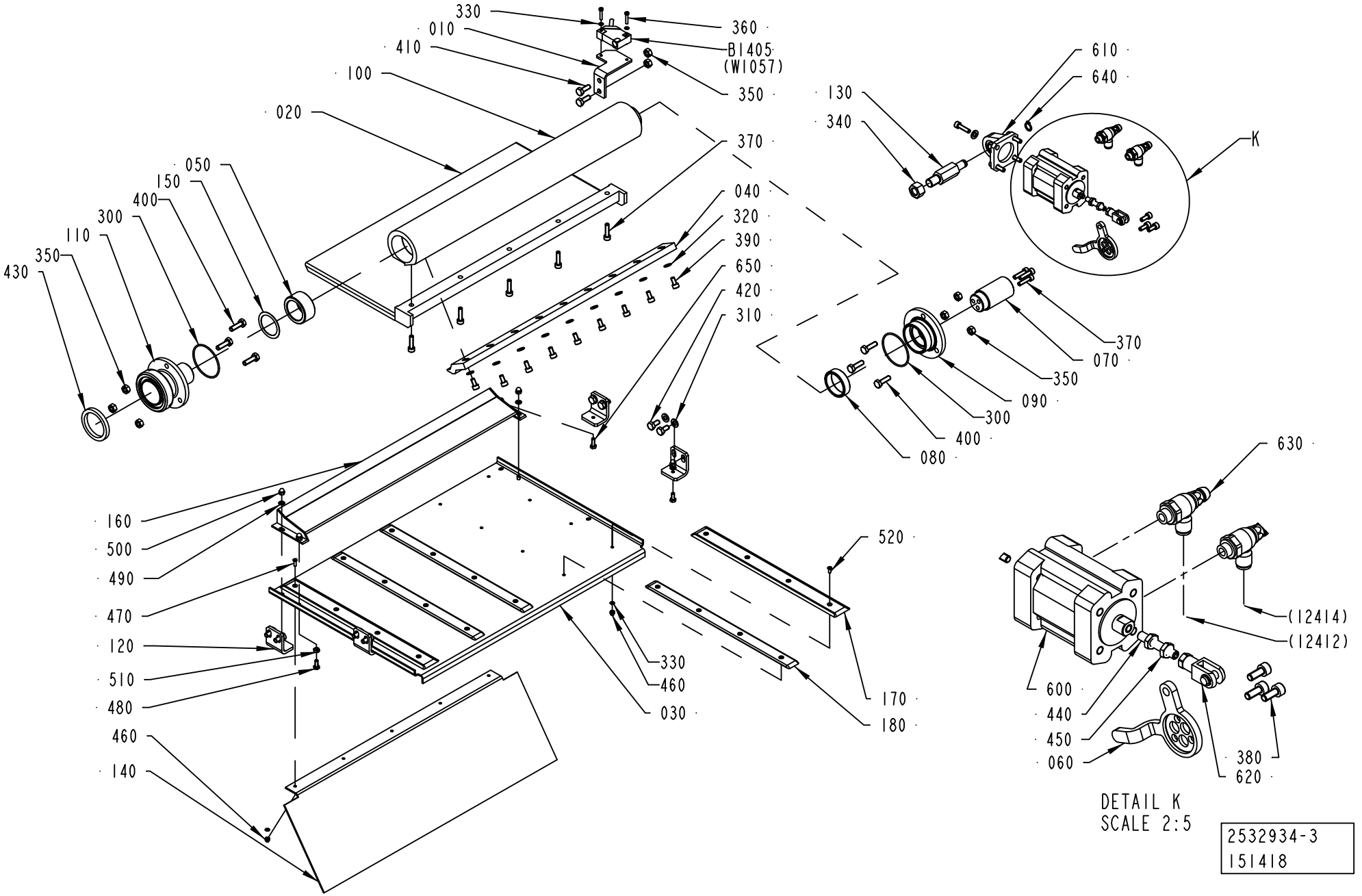
330
010
410
100
020
050
150
400
300
110
350
430
360
B1405
(W1057)
350
370
040
320
390
650
420
310
610
640
130
340
K
370
070
350
090
300
400
080
160
500
490
470
120
510
480
460
140
520
330
460
030
170
180
630
(12414)
(12412)
600
440
450
060
380
620
DETAIL K
SCALE 2:5
2532934-3
151418

ECM: 359126 - 20081002
Group number: 2532934-0100
Assembly Drawing: 2532934-3_1_AA

This list covers pages from 1-192 to 1-197

Pos	Part No	UN	Qty	Description	Page No
SEE PREVIOUS LISTS PAGES: 1-193, 1-195.					

Pos	Part No	UN	Qty	Description	Page No

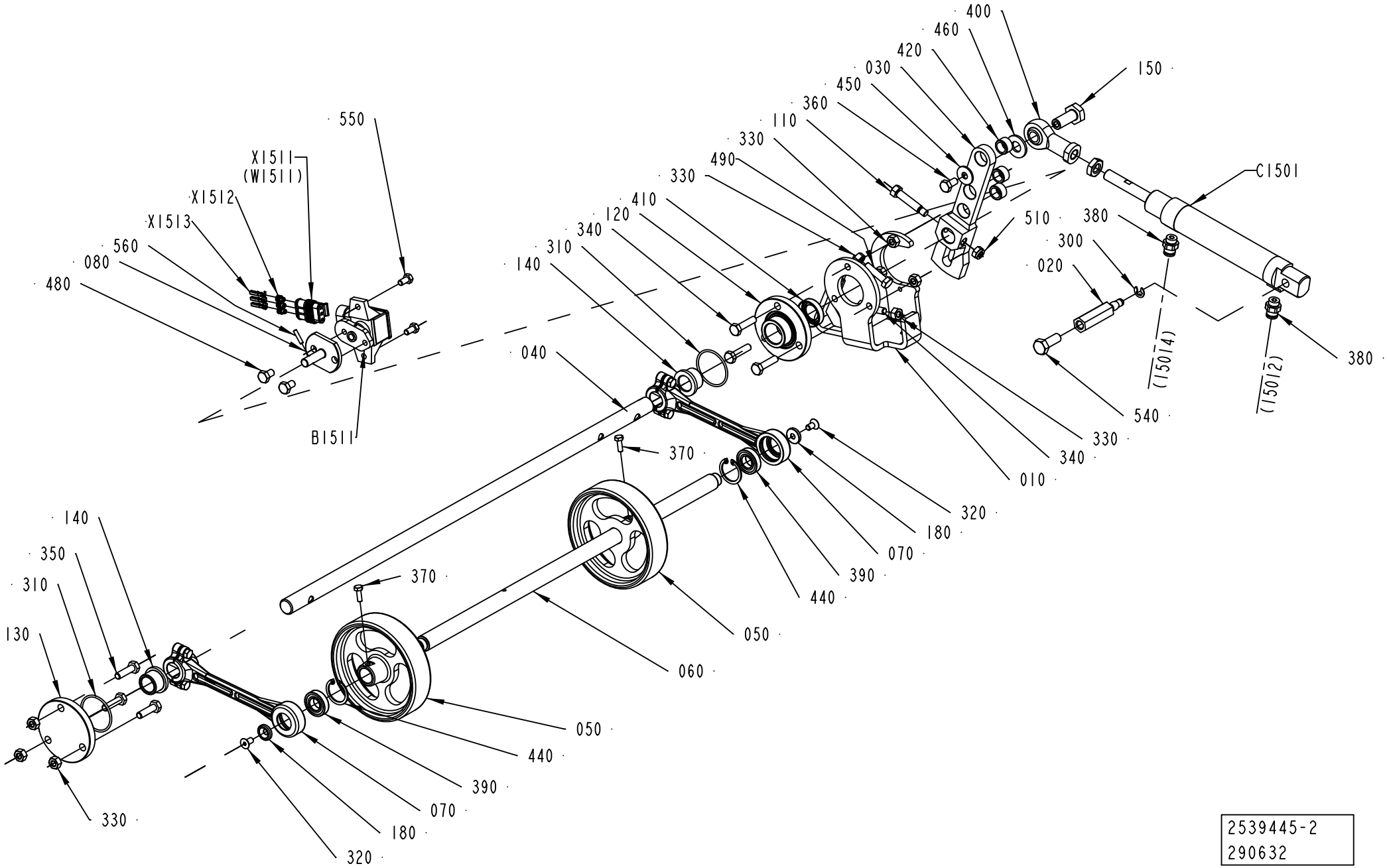

2539445-2
290632

ECM: 290632 - 20070402
Group number: 2539445-0200
Assembly Drawing: 2539445-2_1_AC

Pos	Part No	UN	Qty	Description	Page No
-					
010	2691185-0000		1	SUPPORT	
020	2658077-0000		1	SHAFT	
030	2648780-0000		1	LEVER	
040	2691184-0000		1	SHAFT	
050	1558358-0000		2	WHEEL	
060	1558357-0000		1	SHAFT	
070	2601284-0000		2	LEVER	
080	2691183-0000		1	FLANGED SHAFT	
110	2653607-0000		1	SCREW	
120	1549548-0000		1	FLANGE	
130	1549545-0000		1	FLANGE	
140	1511512-0000		2	BEARING BUSHING	
150	2611009-0000		1	SHAFT	
180	2594621-0000		2	WASHER	
300	315755-0107		1	RETAINING RING SHAFT DIN 6799 5 A2	
310	315205-0715		2	O-RING 33,05X1,78 MM	
320	312155-0325		2	SCREW DIN 7991 MF6S M5X10 A4 70	
330	312605-0316		8	HEXAGON NUT, M6M M6 A280	
340	312105-0372		5	SCREW M6S ISO 4017 M6X25 A480	
350	312105-0371		3	SCREW M6S ISO 4017 M6X22 A480	
360	312105-0366		1	SCREW M6S ISO 4017 M6X12 A480	
370	312105-0291		2	SCREW M6S ISO 4017 M4X12 A470	
380	342722-0202		2	PIPE COUPLING 1/8" D=6MM	
390	90214-0112		2	BALL BEARING, 12X24X6 MM	
400	90459-1018		1	ROD END,BALL JOINT EYE M10X1,25	
410	90091-0429		1	VARILIP 15X26X7 MM	
420	90459-0805		3	BUSHING, 10X14X8 MM	
440	90458-2071		2	RETAINING RING FOR BORE DIN 472 24 A2	
450	90005-0060		1	WASHER PLAIN, RBS 6,4/M6)/18,H=1,5	
460	315105-0173		1	WASHER BRB 10,5X22 RFR	
480	312105-0364		2	SCREW M6S ISO 4017 M6X10 A480	
510	312812-0316		1	HEXAGON NUT, NY-LOCK M6 A480	
540	312105-0452		1	SCREW M6S ISO 4017 M8X22 A480	
550	312105-0325		2	SCREW M6S ISO 4017 M5X10 A480	
560	311103-0235		1	PARALLEL PIN ISO 2338 3M6X14 A1	
B1511	90459-3682		1	ROTARY POSITION SENSOR RPN1A111	
C1501	90459-3650		1	DOUBLE ACTING, MINI-ISO, CYL 25-40	
X1511	90459-3709		1	CONNECTOR 3-POLE AMP 282087-1	
X1512	90459-4077		3	WIRE SEAL , AMP 281934	
X1513	90459-4079		3	MINI MIC SRS, AMP 183035-1	

Pos	Part No	UN	Qty	Description	Page No

Machine Type | Group Description | Used-In | Group Number | Page No

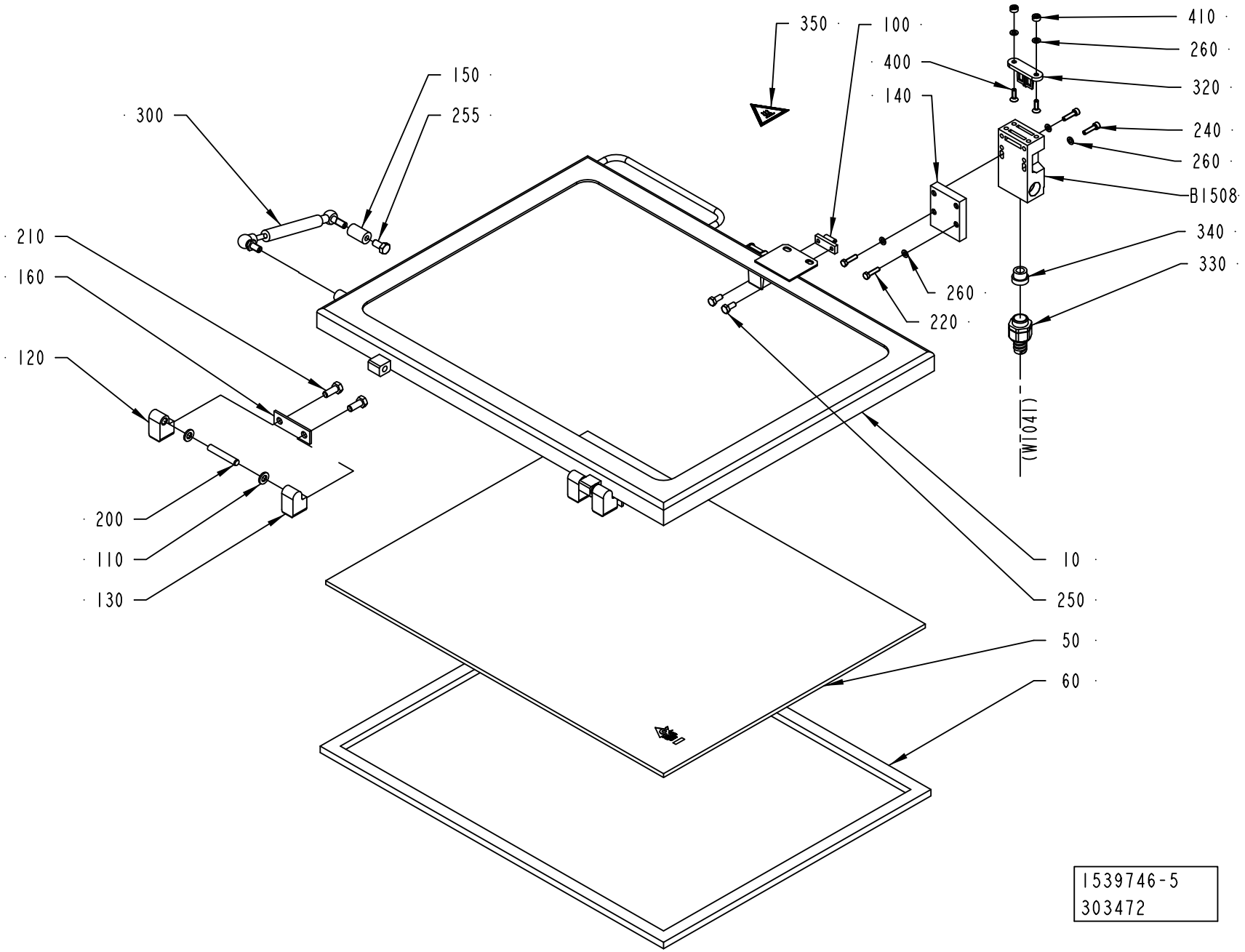
350
100
410
260
320
400
140
240
260
B1508
340
330
260
220
(WT041)
150
255
300
210
160
120
200
110
130
10
250
50
60
1539746-5
303472

ECM: 326047 - 20080103
Group number: 1539746-0250
Assembly Drawing: 1539746-5_1_AA

Pos	Part No	UN	Qty	Description	Page No
-					
010	2709216-0000		1	FRAME	
050	2874755-0000		1	GLASS PANE	
060	2709217-0000		1	GASKET	
100	271860-0000		1	CLAMP BLOCK	
110	441739-0000		4	WASHER	
120	1041979-0000		2	HINGE FLANGE	
130	1041978-0000		2	HINGE FLANGE	
140	2541651-0000		1	PLATE	
150	1037089-0000		1	SPACER	
160	441737-0000		2	WASHER	
200	311103-0413		2	PARALLEL PIN ISO 2338 8M6X50 A1	
210	312105-0451		4	SCREW M6S ISO 4017 M8X20 A480	
220	312105-0331		2	SCREW M6S ISO 4017 M5X20 A480	
240	312115-0331		2	SCREW ISO4762 M5X20 A4 80	
250	312105-0367		2	SCREW M6S ISO 4017 M6X14 A480	
255	312105-0449		1	SCREW M6S ISO 4017 M8X16 A480	
260	315105-0146		6	WASHER BRB 5,3X10 RFR	
300	90347-0039		1	DAMPER	
320	90044-0310		1	KEY FOR SAFETY SWITCH AZ 15/16 B1	
330	90458-0429		1	HOSE GLAND W/O INSERT M20 EXTENDED	
340	353249-0011		1	INSERT, SINGLE HOLE, EK 153/11	
350	359705-0007		1	WARNING SIGN ISO, HOT SURFACE	
400	312155-0329		2	SCREW DIN 7991 MF6S M5X16 A4 70	
410	575034-0000		2	ROUND NUT	
B1508	90459-0472		1	KEY SAF.SW. AZ 16 02ZVRK-M20-2152-2254	

Pos	Part No	UN	Qty	Description	Page No

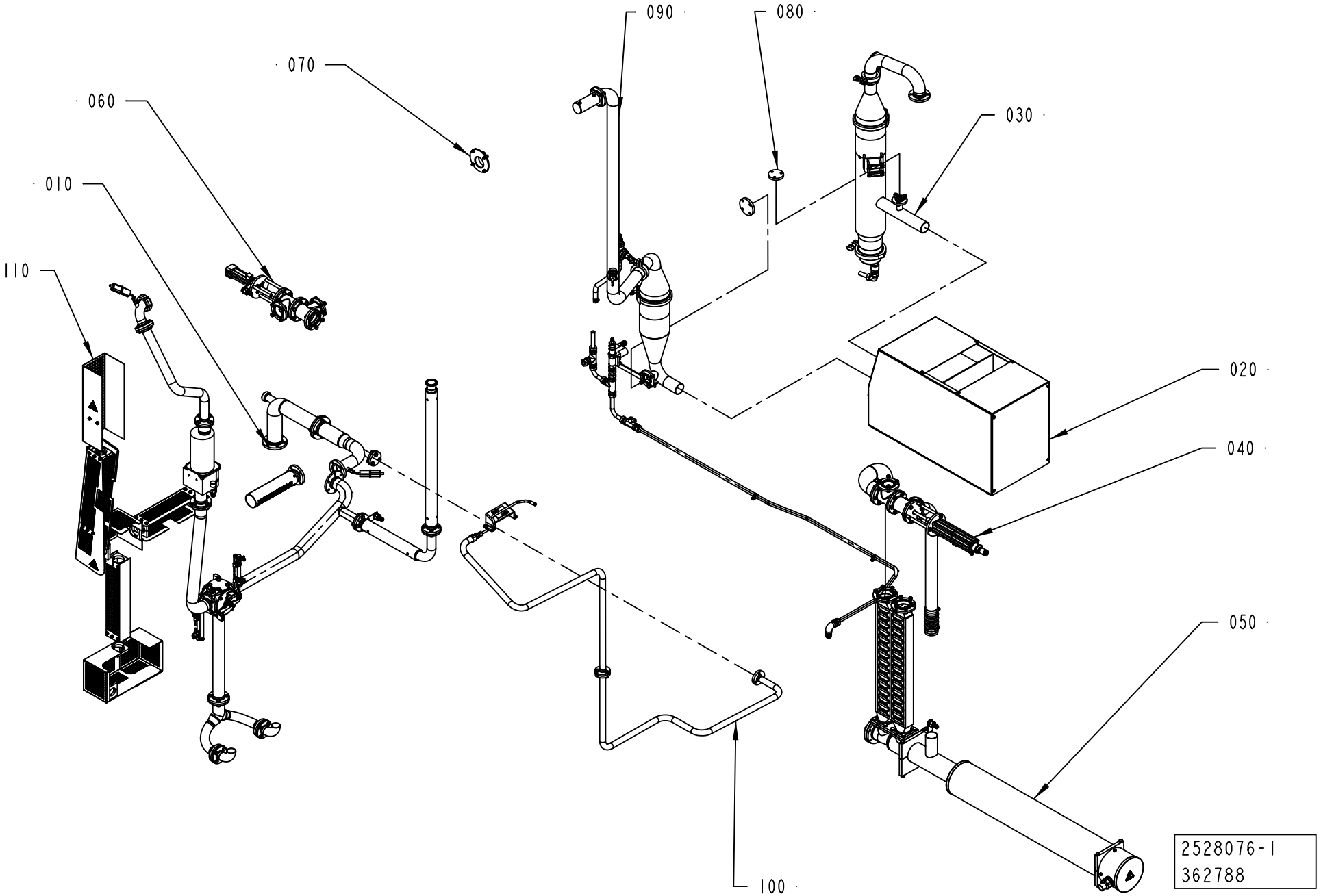
090
080
070
030
060
010
020
110
040
050
100
2528076-1
362788

ECM: 383963 - 20090701
Group number: 2528076-0100
Assembly Drawing: 2528076-1_1_AF

This list covers pages from 1-202 to 1-205

Pos	Part No	UN	Qty	Description	Page No
A3/FLEX DIMC/FLEX (See drawing on page: 1-202)					
020	1517134-0100		1	COMPRESSOR UNIT	**1-207**
080	2547205-0200		1	PRESSURE REGULATOR	**1-209, 1-211**
A3/FLEX NODIMC (See drawing on page: 1-202)					
020	1517134-0100		1	COMPRESSOR UNIT	**1-207**
080	2547205-0200		1	PRESSURE REGULATOR	**1-209, 1-211**
100	2594606-0100		1	STERILE AIR PIPE	**1-213**
A3/SPEED NODIMC NOPT (See drawing on page: 1-204)					
020	2700059-0100		1	COMPRESSOR UNIT	**1-219**
A3/SPEED NODIMC PT/SPEED (See drawing on page: 1-204)					
020	2700059-0100		1	COMPRESSOR UNIT	**1-219**
100	2594606-0100		1	STERILE AIR PIPE	**1-213**
Common Parts					
010	1558511-0200		1	PIPE WORK-AIR	**1-221**
030	1558769-0200		1	SEPARATOR	**1-225**
040	1532250-0100		1	HEAT EXCHANGER VALVE	**1-227**
050	1499158-0100		1	AIR SUPER-HEATER	**1-229**
060	1538166-0100		1	AIR VALVE	**1-231**
070	2550890-0100		1	VALVE	**1-233**
090	1499160-0200		1	SCRUBBER	**1-235**
110	2987075-0100		1	COVER	**1-237, 1-239**

Pos	Part No	UN	Qty	Description	Page No

STERILE AIR SYSTEM

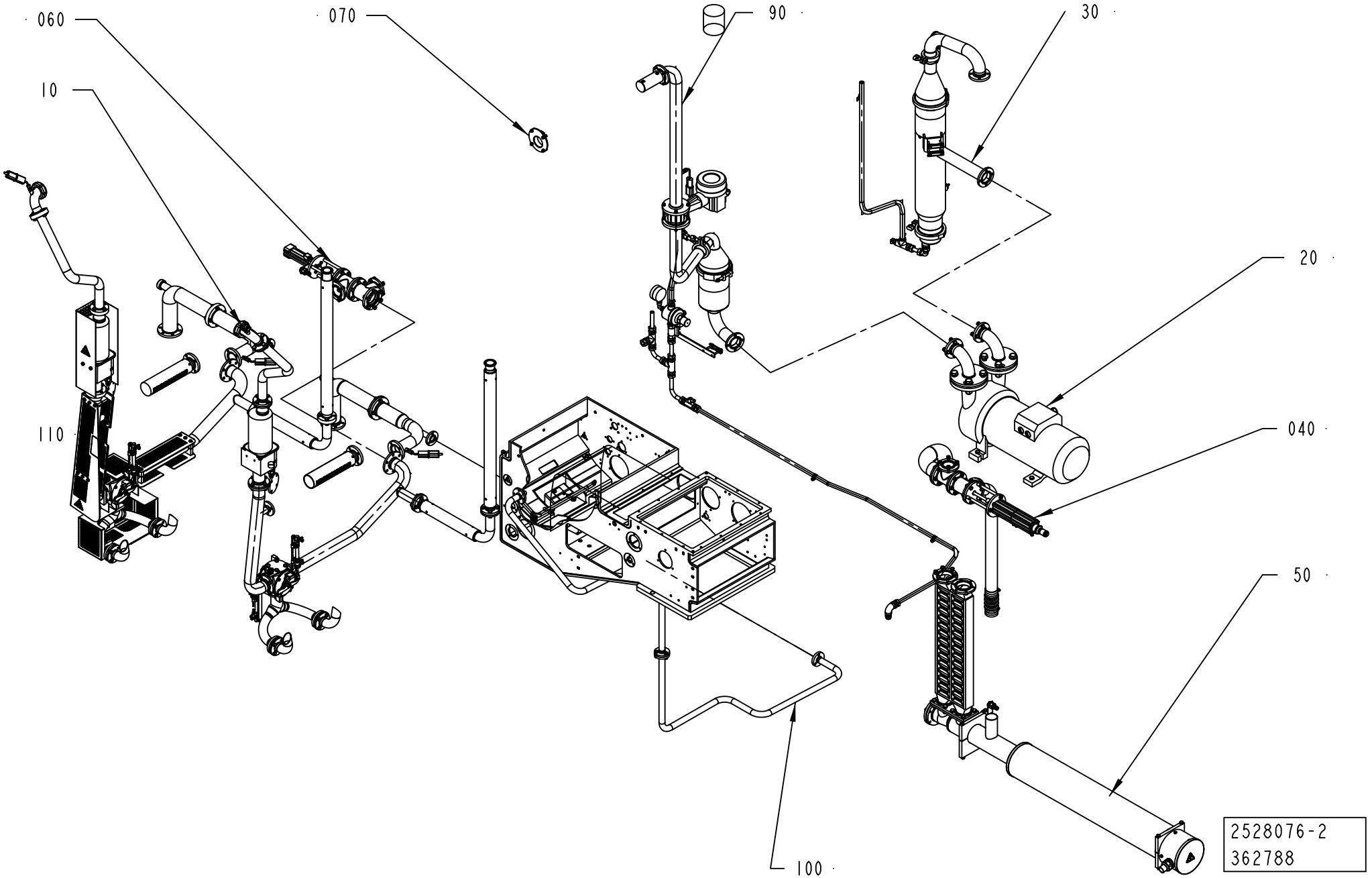

ECM: 383963 - 20090701
Group number: 2528076-0100
Assembly Drawing: 2528076-2_1_AB

This list covers pages from 1-202 to 1-205

Pos	Part No	UN	Qty	Description	Page No
A3/FLEX DIMC/FLEX (See drawing on page: 1-202)					
020	1517134-0100		1	COMPRESSOR UNIT	**1-207**
080	2547205-0200		1	PRESSURE REGULATOR	**1-209, 1-211**
A3/FLEX NODIMC (See drawing on page: 1-202)					
020	1517134-0100		1	COMPRESSOR UNIT	**1-207**
080	2547205-0200		1	PRESSURE REGULATOR	**1-209, 1-211**
100	2594606-0100		1	STERILE AIR PIPE	**1-213**
A3/SPEED NODIMC NOPT (See drawing on page: 1-204)					
020	2700059-0100		1	COMPRESSOR UNIT	**1-219**
A3/SPEED NODIMC PT/SPEED (See drawing on page: 1-204)					
020	2700059-0100		1	COMPRESSOR UNIT	**1-219**
100	2594606-0100		1	STERILE AIR PIPE	**1-213**
Common Parts					
010	1558511-0200		1	PIPE WORK-AIR	**1-221**
030	1558769-0200		1	SEPARATOR	**1-225**
040	1532250-0100		1	HEAT EXCHANGER VALVE	**1-227**
050	1499158-0100		1	AIR SUPER-HEATER	**1-229**
060	1538166-0100		1	AIR VALVE	**1-231**
070	2550890-0100		1	VALVE	**1-233**
090	1499160-0200		1	SCRUBBER	**1-235**
110	2987075-0100		1	COVER	**1-237, 1-239**

Pos	Part No	UN	Qty	Description	Page No

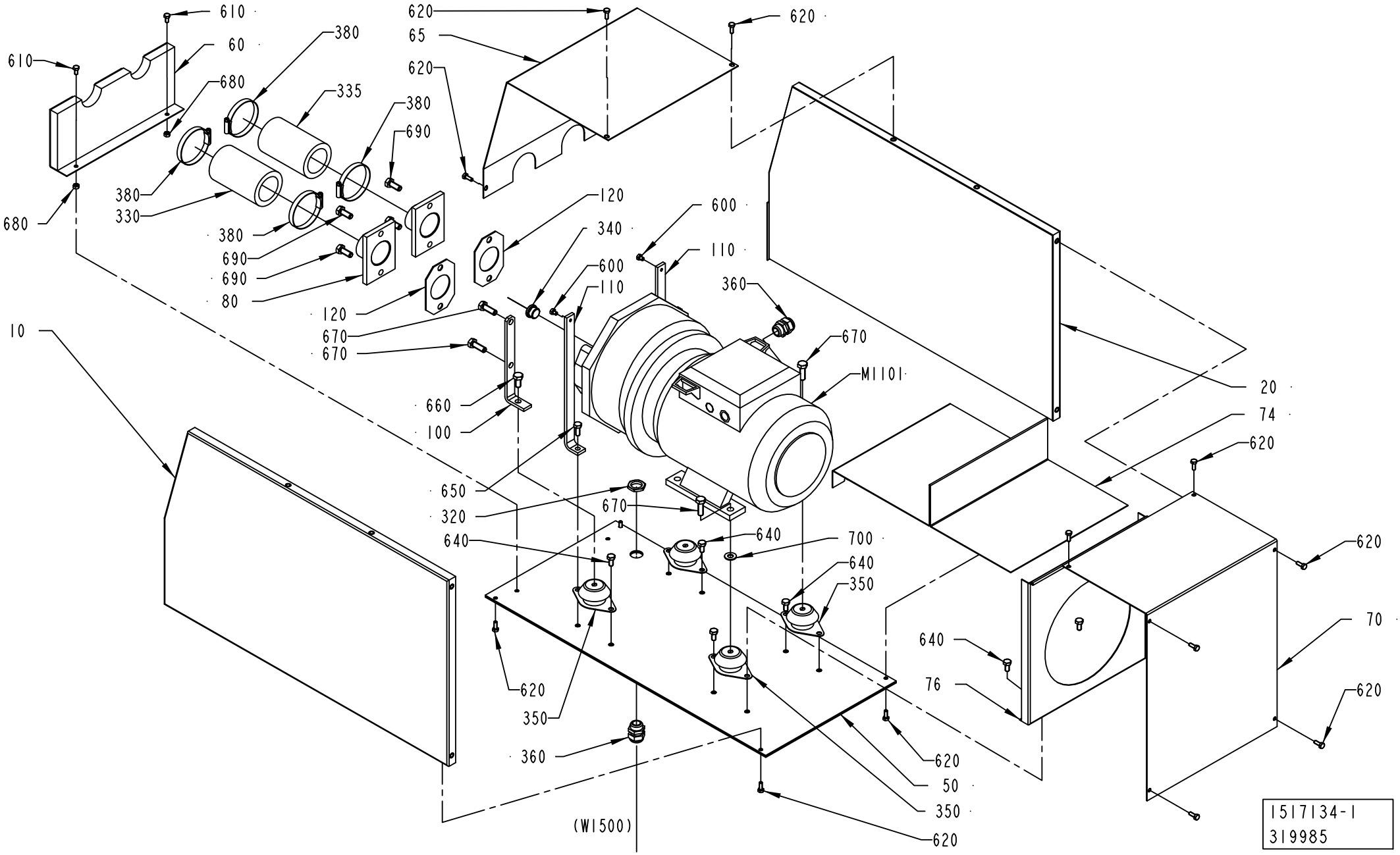
610
60
610
680
380
335
380
690
380
330
680
380
690
690
80
120
670
670
660
100
650
320
640
670
640
700
640
350
620
350
360
(W1500)
620
65
620
620
120
340
600
110
600
110
360
670
M1101
20
74
620
620
70
620
640
76
620
50
350
620
1517134-1
319985

ECM: 326045 - 20080103
Group number: 1517134-0100
Assembly Drawing: 1517134-1_1_AB

Pos	Part No	UN	Qty	Description	Page No
-					
010	1517137-0000		1	COVER	
020	1517138-0000		1	COVER	
050	1036314-0000		1	BOTTOM PANEL	
060	1517135-0000		1	FRONT PLATE	
065	1517136-0000		1	COVER	
070	1040876-0000		1	COVER	
074	1040877-0000		1	PLATE	
076	1040878-0000		1	PLATE	
080	1036318-0000		2	PIPE	
100	269859-0000		2	BRACKET	
110	1036319-0000		2	BRACKET	
120	230551-0000		2	GASKET	
320	90099-0110		1	NUT, PR 22,5 (PG16)	
330	90166-0199	MM	130	RUBBER HOSE	
335	90166-0199	MM	130	RUBBER HOSE	
340	90600-1537		1	PLUG, EXT THREAD HEX SOCKET 0919 00 21	
350	90347-0144		4	VIBRATION DAMPER, NO. RA 40EM-A	
360	352103-0111		2	CABLE GLAND, ST 16, PR22,5/PG16	
380	342991-0111		4	HOSE CLIP,WORM DRIVE TYPE (63)-73	
600	312105-0362		2	SCREW M6S ISO 4017 M6X8 A480	
610	312105-0366		2	SCREW M6S ISO 4017 M6X12 A480	
620	312105-0368		14	SCREW M6S ISO 4017 M6X16 A480	
640	312105-0449		6	SCREW M6S ISO 4017 M8X16 A480	
650	312105-0451		2	SCREW M6S ISO 4017 M8X20 A480	
660	312105-0491		2	SCREW M6S ISO 4017 M10X20 A480	
670	312105-0495		6	SCREW M6S ISO 4017 M10X30 A480	
680	312605-0316		2	HEXAGON NUT, M6M M6 A280	
690	312105-0493		4	SCREW M6S ISO 4017 M10X25 A480	
700	315105-0173		2	WASHER BRB 10,5X22 RFR	
M1101	90459-4562		1	COMPRESSOR, 2BV500080H0200	
	90459-4610		*1*	*MOTOR, NASH ELMO M2AA 112*	

Pos	Part No	UN	Qty	Description	Page No

Machine Type | Group Description | Used-In | Group Number | Page No

PRESSURE REGULATOR

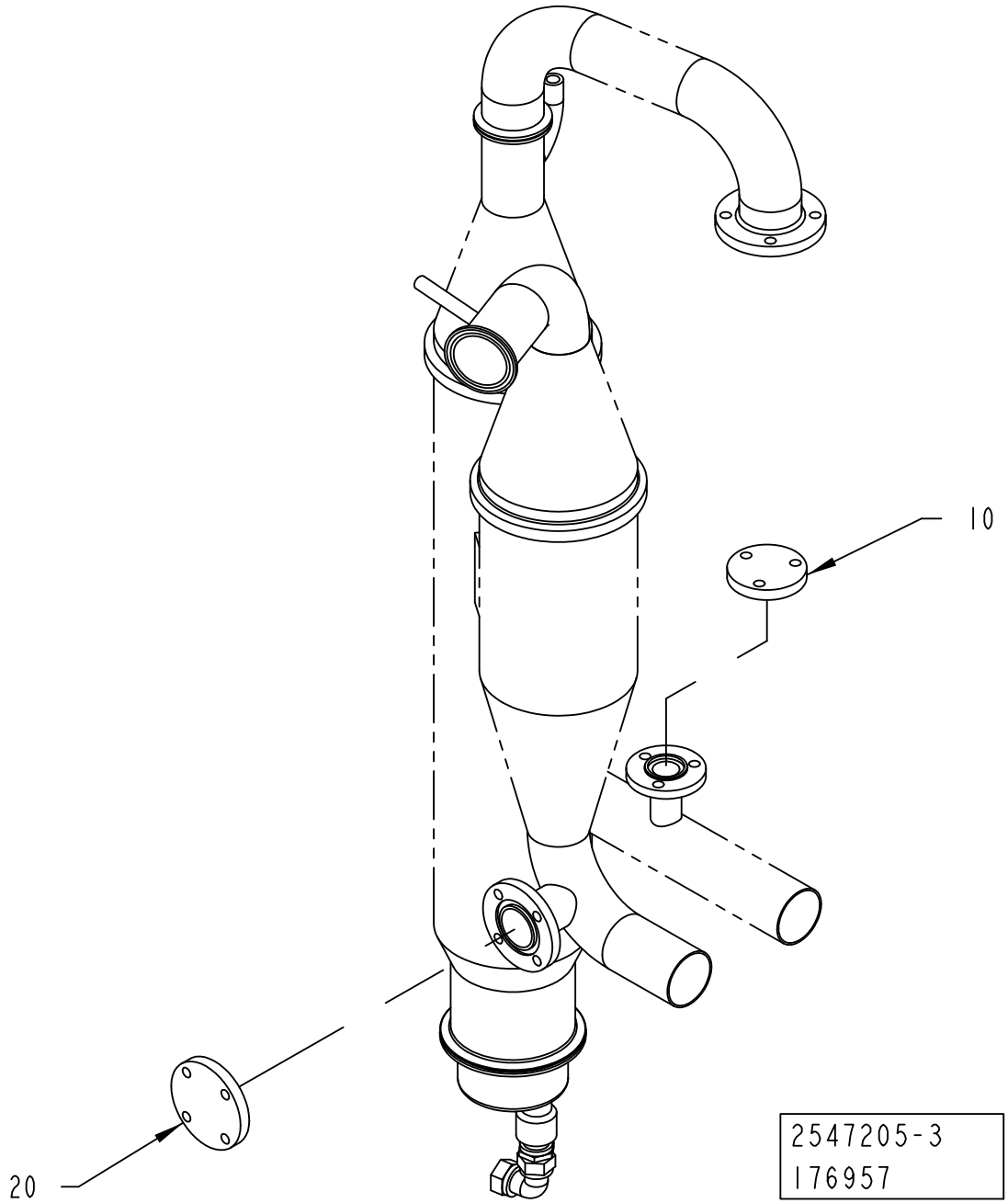

ECM: 190574 - 20041104
Group number: 2547205-0200
Assembly Drawing: 2547205-3_1_AA

This list covers pages from 1-208 to 1-211

Pos	Part No	UN	Qty	Description	Page No
50HZ (See drawing on page: 1-208)					
010	1037129-0000		1	LID	
020	1037268-0000		1	LID	
60HZ (See drawing on page: 1-210)					
010	1037267-0000		1	PIPE	
020	2685238-0000		1	PIPE	
030	490998-0000		1	THROTTLE SCREW	
040	442237-0000		1	NUT	
100	315202-0119		1	O-RING 25,1X1,6 MM	
110	315229-0203		1	GASKET 22,1X30,1X3,7 MM 1"	
120	312105-0453		3	SCREW M6S ISO 4017 M8X25 A480	
130	312605-0318		3	HEXAGON NUT, M6M M8 A280	

Pos	Part No	UN	Qty	Description	Page No

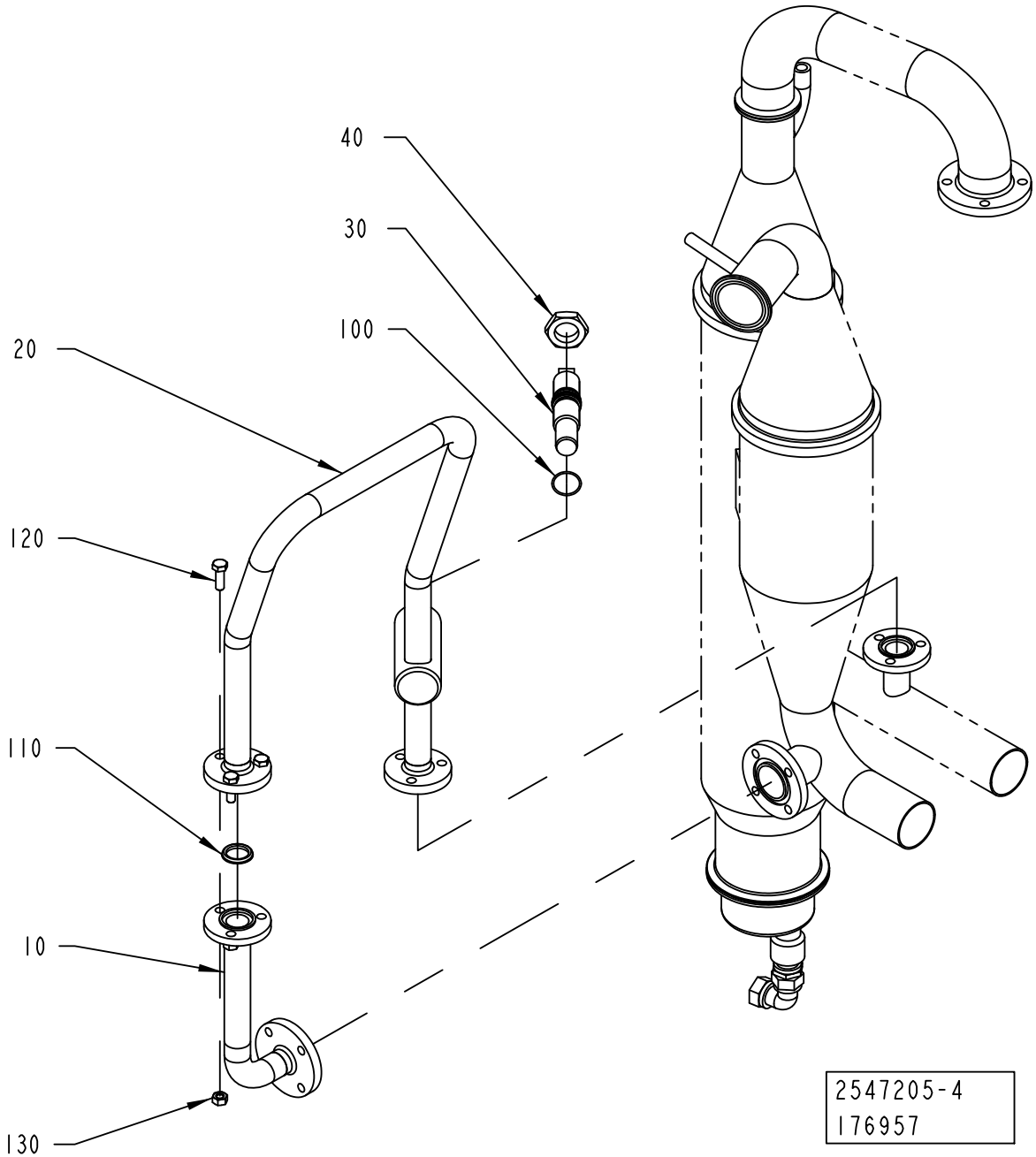
40
30
100
20
120
110
10
130
2547205-4
176957

ECM: 190574 - 20041104
Group number: 2547205-0200
Assembly Drawing: 2547205-4_1_AA

This list covers pages from 1-208 to 1-211

Pos	Part No	UN	Qty	Description	Page No
50HZ (See drawing on page: 1-208)					
010	1037129-0000		1	LID	
020	1037268-0000		1	LID	
60HZ (See drawing on page: 1-210)					
010	1037267-0000		1	PIPE	
020	2685238-0000		1	PIPE	
030	490998-0000		1	THROTTLE SCREW	
040	442237-0000		1	NUT	
100	315202-0119		1	O-RING 25,1X1,6 MM	
110	315229-0203		1	GASKET 22,1X30,1X3,7 MM 1"	
120	312105-0453		3	SCREW M6S ISO 4017 M8X25 A480	
130	312605-0318		3	HEXAGON NUT, M6M M8 A280	

Pos	Part No	UN	Qty	Description	Page No

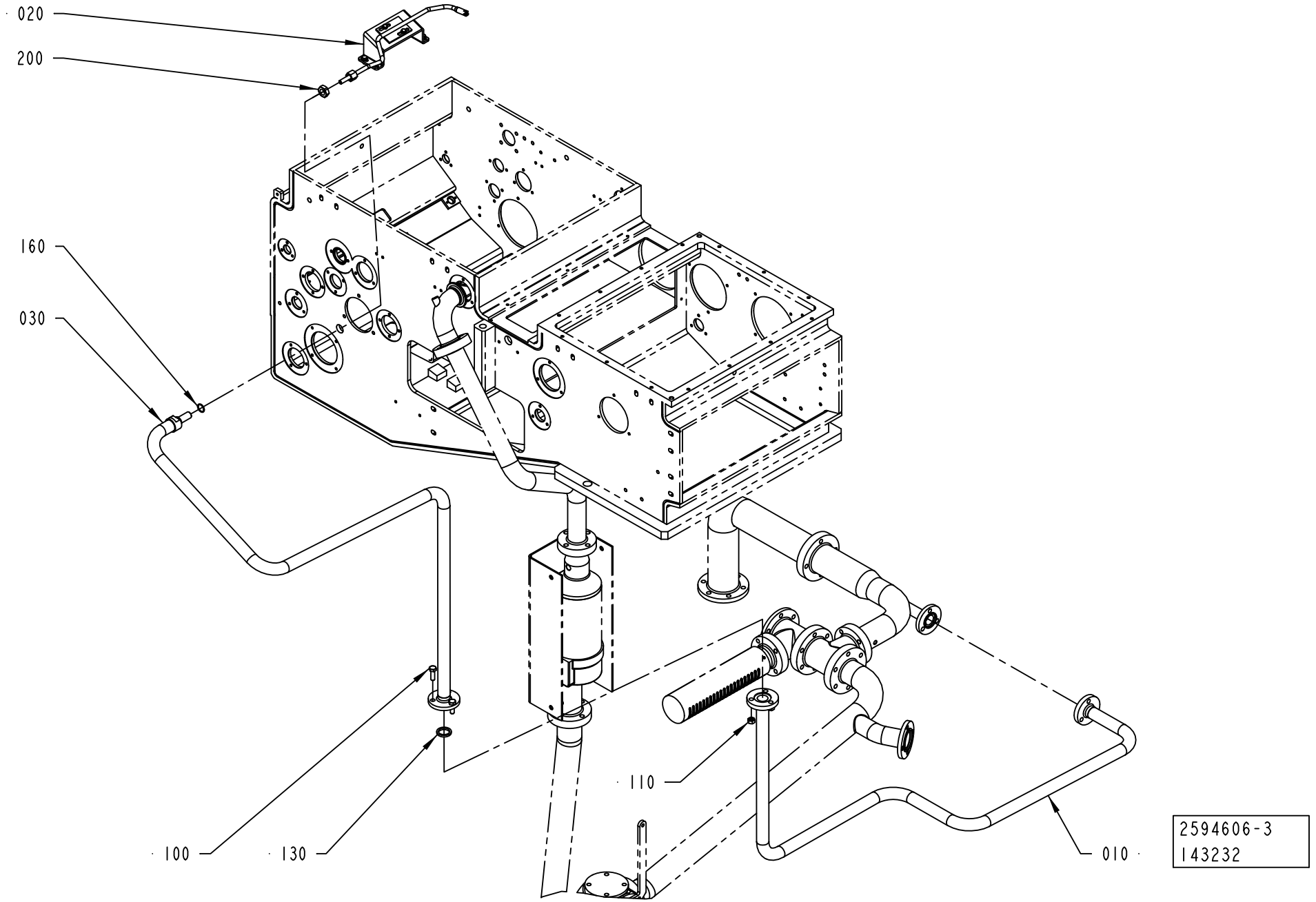
020
200
160
030
110
100
130
010
2594606-3
143232

ECM: 312834 - 20070701
Group number: 2594606-0100
Assembly Drawing: 2594606-3_1_AA

Pos	Part No	UN	Qty	Description	Page No
A3/FLEX					
030	2641322-0000		1	PIPE	
160	315205-0704		1	O-RING 15,6X1,78 MM	
200	90099-0053		1	HEXAGON NUT, M14X1,5, SMS2176	
Common Parts					
010	2641298-0000		1	PIPE	
020	2671730-0100		1	AIR NOZZLE	**1-215, 1-217**
100	312105-0453		3	SCREW M6S ISO 4017 M8X25 A480	
110	312605-0318		3	HEXAGON NUT, M6M M8 A280	
130	315229-0203		1	GASKET 22,1X30,1X3,7 MM 1"	

Pos	Part No	UN	Qty	Description	Page No

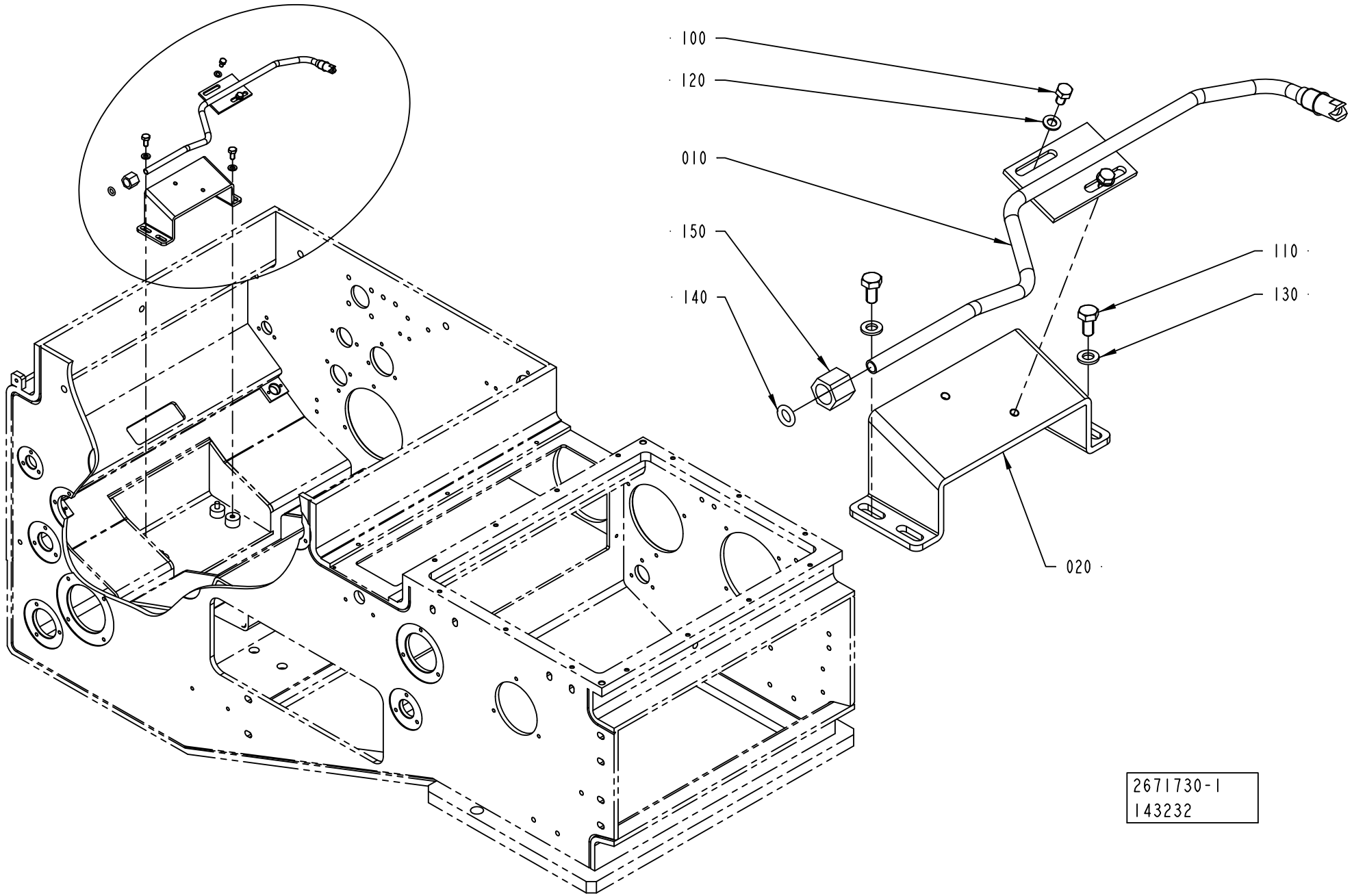
100
120
010
150
140
110
130
020
2671730-1
143232

ECM: 322231 - 20080101
Group number: 2671730-0100
Assembly Drawing: 2671730-1_1_AA

This list covers pages from 1-214 to 1-217

Pos	Part No	UN	Qty	Description	Page No
A3/FLEX TBA 0200S, A3/FLEX TBA 0200M, A3/FLEX TBA 0250S (See drawing on page: 1-216)					
010	2668569-0000		1	PLUG	
140	315205-0808		1	O-RING 7,59X2,62 MM	
A3/FLEX TBA 0500B, A3/FLEX TBA 1000B, A3/FLEX TBA 1000S, A3/FLEX TBA 1500S, A3/FLEX TBA 0200B, A3/FLEX TBA 0250B, A3/FLEX TBA 0330S, A3/FLEX TBA 0500S, A3/FLEX TPA 1000S (See drawing on page: 1-214)					
010	2872375-0000		1	NOZZLE	
140	315205-0808		1	O-RING 7,59X2,62 MM	
150	342703-0208		1	NUT, PIPES & CONNECTORS,NUT M-8 SS	
A3/FLEX TBA 1000SQ, A3/FLEX TPA 1000SQ, A3/FLEX TPA 0330SQ, A3/FLEX TPA 0500SQ, A3/FLEX TPA 0250SQ, A3/FLEX TPA 0200SQ, A3/FLEX TPA 0750SQ, A3/FLEX TBA 0200SQ, A3/FLEX TBA 0250SQ, A3/FLEX TBA 0500SQ, A3/FLEX TGA 1000SQ, A3/FLEX TGA 0500SQ, A3/FLEX TGA 0750SQ (See drawing on page: 1-214)					
010	2668565-0000		1	NOZZLE	
140	315205-0808		1	O-RING 7,59X2,62 MM	
150	342703-0208		1	NUT, PIPES & CONNECTORS,NUT M-8 SS	
A3/FLEX TBA 1890S, A3/FLEX TBA 2000S, A3/FLEX TBA 1400B (See drawing on page: 1-214)					
010	2641317-0000		1	PIPE	
140	315205-0808		1	O-RING 7,59X2,62 MM	
150	342703-0208		1	NUT, PIPES & CONNECTORS,NUT M-8 SS	
Common Parts					
020	2641319-0000		1	BRACKET	
100	312105-0323		2	SCREW M6S ISO 4017 M5X8 A480	
110	312105-0366		2	SCREW M6S ISO 4017 M6X12 A480	
120	315105-0146		2	WASHER BRB 5,3X10 RFR	
130	315105-0153		2	WASHER BRB 6,4X12 RFR	

Pos	Part No	UN	Qty	Description	Page No

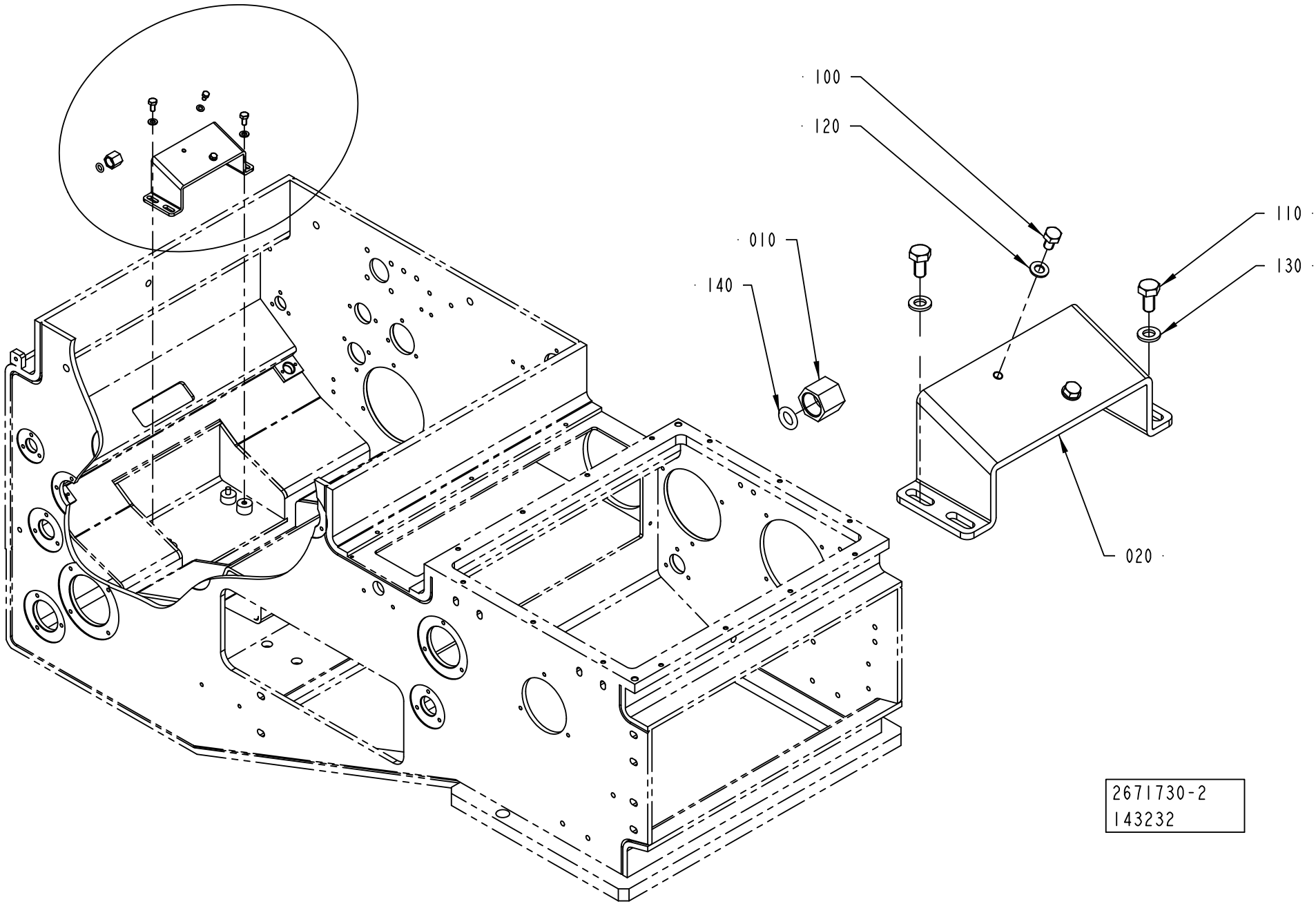
100
120
110
130
010
140
020
2671730-2
143232

Pos	Part No	UN	Qty	Description	Page No
A3/FLEX TBA 0200S, A3/FLEX TBA 0200M, A3/FLEX TBA 0250S (See drawing on page: 1-216)					
010	2668569-0000		1	PLUG	
140	315205-0808		1	O-RING 7,59X2,62 MM	
A3/FLEX TBA 0500B, A3/FLEX TBA 1000B, A3/FLEX TBA 1000S, A3/FLEX TBA 1500S, A3/FLEX TBA 0200B, A3/FLEX TBA 0250B, A3/FLEX TBA 0330S, A3/FLEX TBA 0500S, A3/FLEX TPA 1000S (See drawing on page: 1-214)					
010	2872375-0000		1	NOZZLE	
140	315205-0808		1	O-RING 7,59X2,62 MM	
150	342703-0208		1	NUT, PIPES & CONNECTORS,NUT M-8 SS	
A3/FLEX TBA 1000SQ, A3/FLEX TPA 1000SQ, A3/FLEX TPA 0330SQ, A3/FLEX TPA 0500SQ, A3/FLEX TPA 0250SQ, A3/FLEX TPA 0200SQ, A3/FLEX TPA 0750SQ, A3/FLEX TBA 0200SQ, A3/FLEX TBA 0250SQ, A3/FLEX TBA 0500SQ, A3/FLEX TGA 1000SQ, A3/FLEX TGA 0500SQ, A3/FLEX TGA 0750SQ (See drawing on page: 1-214)					
010	2668565-0000		1	NOZZLE	
140	315205-0808		1	O-RING 7,59X2,62 MM	
150	342703-0208		1	NUT, PIPES & CONNECTORS,NUT M-8 SS	
A3/FLEX TBA 1890S, A3/FLEX TBA 2000S, A3/FLEX TBA 1400B (See drawing on page: 1-214)					
010	2641317-0000		1	PIPE	
140	315205-0808		1	O-RING 7,59X2,62 MM	
150	342703-0208		1	NUT, PIPES & CONNECTORS,NUT M-8 SS	
Common Parts					
020	2641319-0000		1	BRACKET	
100	312105-0323		2	SCREW M6S ISO 4017 M5X8 A480	
110	312105-0366		2	SCREW M6S ISO 4017 M6X12 A480	
120	315105-0146		2	WASHER BRB 5,3X10 RFR	
130	315105-0153		2	WASHER BRB 6,4X12 RFR	

Pos	Part No	UN	Qty	Description	Page No

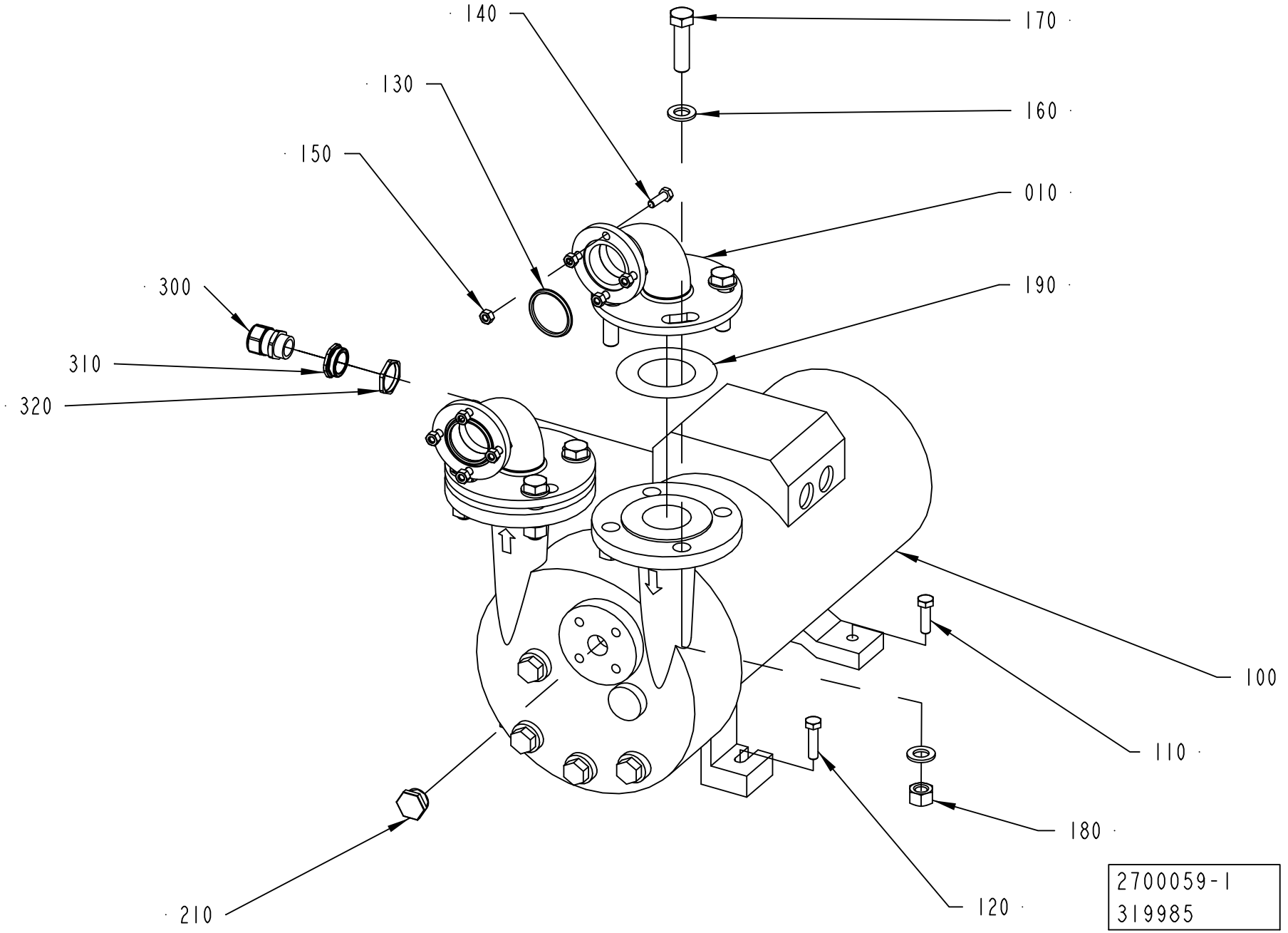
140
130
150
300
310
320
170
160
010
190
100
110
180
120
210
2700059-1
319985

ECM: 326939 - 20080103
Group number: 2700059-0100
Assembly Drawing: 2700059-1_1_AC

Pos	Part No	UN	Qty	Description	Page No
-					
010	2657915-0000		2	PIPE	
100	90459-3788		1	COMPRESSOR, 2BV5110-0ZH01-8S-Z	
110	312105-0497		2	SCREW M6S ISO 4017 M10X35 A480	
120	312105-0499		2	SCREW M6S ISO 4014 M10X40 A480	
130	315229-0205		2	GASKET 47,5X55,5X3,7 MM 2 INCH	
140	312105-0453		8	SCREW M6S ISO 4017 M8X25 A480	
150	312605-0318		8	HEXAGON NUT, M6M M8 A280	
160	315105-0186		16	WASHER BRB 17X30 RFR	
170	312105-0632		8	SCREW M6S ISO 4014 M16X60 A480	
180	312605-0324		8	HEXAGON NUT, M6M M16 A280	
190	90459-4090		2	GASKET FPM 61X107X4, KLINGER 6080.1925	
210	90600-1713		1	PLUG, EXT. G-THREAD, G3/4	
300	90458-0440		1	GLAND, EXTENDED WITH INSERT, M25X1,5	
310	90459-4186		1	REDUCER, M32/M25	
320	353250-0032		1	GLAND, LOCK NUT M32X1,5	

Pos	Part No	UN	Qty	Description	Page No

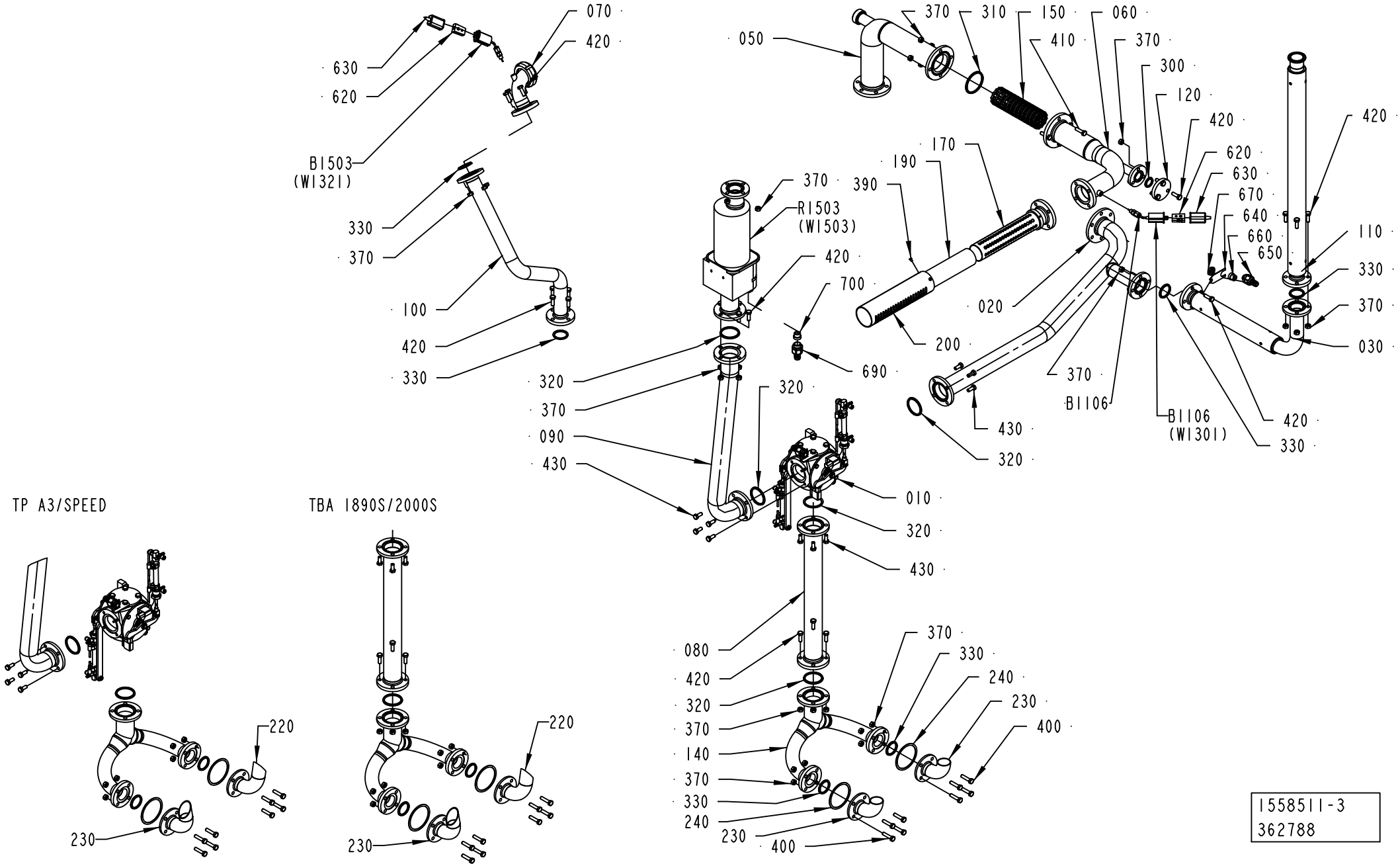

1558511-3
362788

ECM: 387792 - 20090402
Group number: 1558511-0200
Assembly Drawing: 1558511-3_1_AC

Pos	Part No	UN	Qty	Description	Page No
A3/FLEX DIMC/FLEX					
080	1538183-0000		1	PIPE	
120	2565467-0000		1	FLANGE	
230	2547407-0000		2	PIPE	
320	315229-0205		5	GASKET 47,5X55,5X3,7 MM 2 INCH	
370	312605-0318		39	HEXAGON NUT, M6M M8 A280	
420	312105-0453		27	SCREW M6S ISO 4017 M8X25 A480	
W1503	351120-0264	MM	6500	CABLE SILFLEX SIHF 4X1,5 00460153	
A3/FLEX TBA 0200S NODIMC, A3/FLEX TBA 1000SQ NODIMC, A3/FLEX TBA 1000S NODIMC, A3/FLEX TBA 1000B NODIMC, A3/FLEX TBA 0500B NODIMC, A3/FLEX TPA 1000SQ NODIMC, A3/FLEX TBA 1500S NODIMC, A3/FLEX TBA 0200B NODIMC, A3/FLEX TBA 0250B NODIMC, A3/FLEX TBA 0330S NODIMC, A3/FLEX TPA 0330SQ NODIMC, A3/FLEX TPA 0500SQ NODIMC, A3/FLEX TBA 0250S NODIMC, A3/FLEX TBA 0200M NODIMC, A3/FLEX TBA 0500S NODIMC, A3/FLEX TPA 0200SQ NODIMC, A3/FLEX TPA 0250SQ NODIMC, A3/FLEX TPA 0750SQ NODIMC, A3/FLEX TBA 0200SQ NODIMC, A3/FLEX TBA 0250SQ NODIMC, A3/FLEX TBA 0500SQ NODIMC					
080	1538183-0000		1	PIPE	
230	2547407-0000		2	PIPE	
320	315229-0205		5	GASKET 47,5X55,5X3,7 MM 2 INCH	
370	312605-0318		39	HEXAGON NUT, M6M M8 A280	
420	312105-0453		27	SCREW M6S ISO 4017 M8X25 A480	
W1503	351120-0264	MM	6500	CABLE SILFLEX SIHF 4X1,5 00460153	
A3/FLEX TBA 2000S NODIMC, A3/FLEX TBA 1890S NODIMC, A3/FLEX TGA 1000SQ NODIMC, A3/FLEX TBA 1400B NODIMC, A3/FLEX TGA 0500SQ NODIMC, A3/FLEX TGA 0750SQ NODIMC					
080	1538183-0000		1	PIPE	
220	2657887-0000		1	HORN	
230	2657888-0000		1	HORN	
320	315229-0205		5	GASKET 47,5X55,5X3,7 MM 2 INCH	
370	312605-0318		39	HEXAGON NUT, M6M M8 A280	
420	312105-0453		27	SCREW M6S ISO 4017 M8X25 A480	
W1503	351120-0264	MM	6500	CABLE SILFLEX SIHF 4X1,5 00460153	
Common Parts					
010	2550895-0100		1	CHANGE OVER VALVE	**1-223**
020	2695997-0000		1	PIPE	
030	1558510-0000		1	PIPE	
050	1538487-0000		1	PIPE	
060	2641296-0000		1	PIPE	
070	1538474-0000		1	PIPE	
090	2641299-0000		1	PIPE	
100	1538181-0000		1	PIPE	
110	2695998-0000		1	PIPE	
140	1538154-0000		1	DRAIN PIPE	
150	1549526-0000		1	CONTAINER	
170	1517482-0000		1	TUBE	
190	1511755-0000		1	NET	
200	1511503-0000		1	PIPE	
240	1036294-0000		2	GASKET	
300	315229-0203		1	GASKET 22,1X30,1X3,7 MM 1"	
310	315229-0206		1	GASKET 60,2X68,2X3,7 MM 2"1/2	
330	315229-0204		6	GASKET 34,8X42,8X3,7 MM 1"1/2	
390	312125-0285		4	SCREW ISO 1207 M4X6 A4	
400	312109-0457		8	SCREW M6S ISO 4017 M8X35 A480	
410	312105-0455		4	SCREW M6S ISO 4017 M8X30 A480	
430	312105-0451		12	SCREW M6S ISO 4017 M8X20 A480	
620	90326-0020		2	PLUG, FEMALE YELLOW CR-AL	
630	90326-0012		2	PROTECTIVE COVER, T31A4618	
640	1036293-0000		1	HOLDER	
650	353243-0001		1	HOSE GLAND W/O INSERT PG9 EXTENDED	
660	353249-0008		1	INSERT, SINGLE HOLE, EK 152/7	
670	90099-0104		1	NUT, PR 15,2 (PG9)	
690	90458-0429		1	HOSE GLAND W/O INSERT M20 EXTENDED	
700	353249-0011		1	INSERT, SINGLE HOLE, EK 153/11	
B1106	90326-0057		1	THERMOCOUPLE, CR-AL	
B1503	90326-0057		1	THERMOCOUPLE, CR-AL	
R1503	2793360-0000		1	HEATER	
W1301	90220-0034	MM	8000	THERMOCABLE TEX/SITW-20F-KX 2X0,5MM2	
W1321	90220-0034	MM	8000	THERMOCABLE TEX/SITW-20F-KX 2X0,5MM2	

Machine Type	Group Description	Used-In	Group Number	Page No

CHANGE OVER VALVE

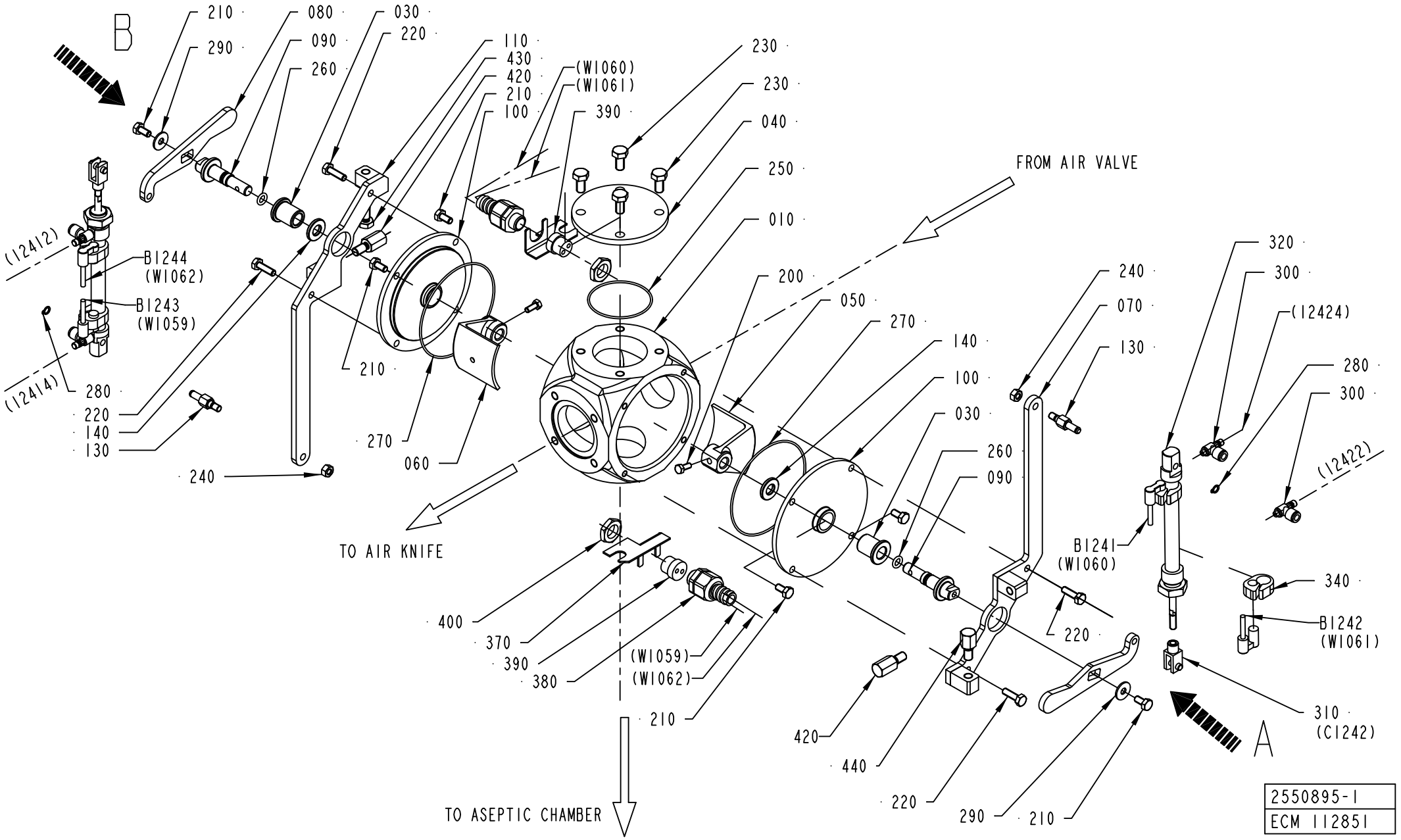

ECM: 272013 - 20080402
Group number: 2550895-0100
Assembly Drawing: 2550895-1_1_AA

Pos	Part No	UN	Qty	Description	Page No
A3/FLEX					
440	2582576-0000		1	STOP SCREW	
Common Parts					
010	1524236-0000		1	VALVE HOUSING	
030	1539740-0000		2	BUSHING	
040	1539741-0000		1	COVER	
050	1539742-0000		1	SHUTTER	
060	1539743-0000		1	SHUTTER	
070	1539744-0000		1	BRACKET	
080	1539745-0000		2	LEVER	
090	1539750-0000		2	SHAFT	
100	1539751-0000		2	COVER	
110	1539752-0000		1	BRACKET	
130	1548742-0000		2	SPACER	
140	1548743-0000		2	WASHER	
200	312105-0327		2	SCREW M6S ISO 4017 M5X12 A480	
210	312105-0366		6	SCREW M6S ISO 4017 M6X12 A480	
220	312105-0370		4	SCREW M6S ISO 4017 M6X20 A480	
230	312105-0449		4	SCREW M6S ISO 4017 M8X16 A480	
240	312605-0316		4	HEXAGON NUT, M6M M6 A280	
250	90459-1189		1	O-RING 56,87X1,78 MM	
260	315204-0206		2	O-RING 7,3X2,4 MM	
270	315205-0807		2	O-RING 94,97X1,78 MM	
280	315751-0103		2	RETAINING RING FOR SHAFT DIN 471 6 SS	
290	90005-0060		2	WASHER PLAIN, RBS 6,4/M6)/18,H=1,5	
300	90235-0844		4	THROTTLE CHECK VALVE, M5, MANUAL, 6MM	
310	90450-0725		2	ROD END, CLEVIS WITH AXLE M6	
320	90459-0713		2	DOUBLE ACTING, MINI-ISO, CYL 12-80	
340	90459-0799		4	SENSOR BRACKET SMBR-12 FOR CYL 12	
370	1036610-0000		2	BRACKET	
380	353243-0001		2	HOSE GLAND W/O INSERT PG9 EXTENDED	
390	353249-0036		2	INSERT, MULTI HOLE, EK152 M 2X4	
400	90099-0104		2	NUT, PR 15,2 (PG9)	
420	2528061-0000		2	SCREW	
430	2528062-0000		1	SCREW	
B1241	90459-0829		1	PROX.SENSOR SMTO-4U-PS-K-LED-24	
B1242	90459-0829		1	PROX.SENSOR SMTO-4U-PS-K-LED-24	
B1243	90459-0829		1	PROX.SENSOR SMTO-4U-PS-K-LED-24	
B1244	90459-0829		1	PROX.SENSOR SMTO-4U-PS-K-LED-24	

Pos	Part No	UN	Qty	Description	Page No

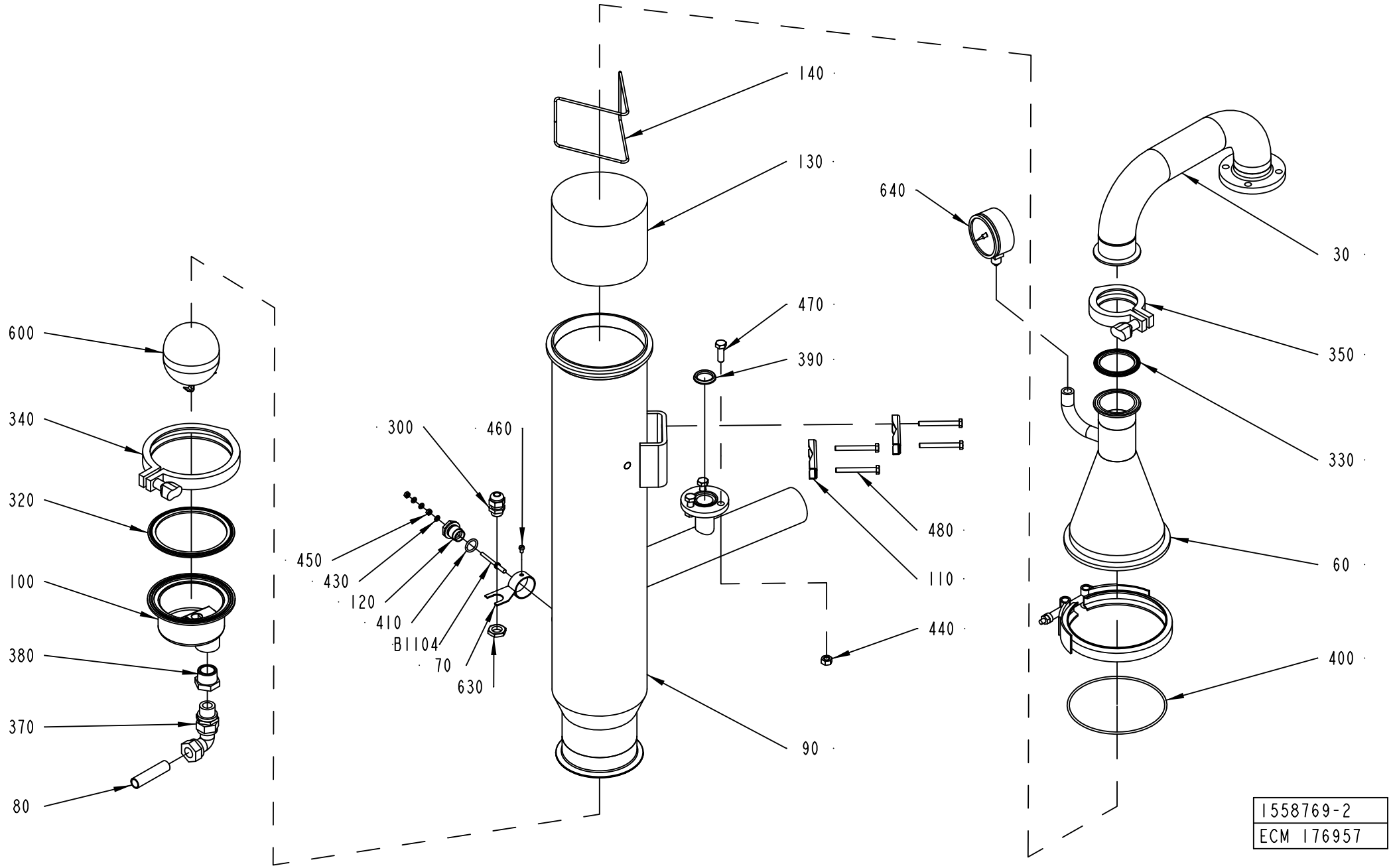
140
130
640
30
470
390
350
600
340
300
460
330
320
480
450
430
120
410
B1104
70
630
110
60
100
440
380
400
370
90
80
1558769-2
ECM 176957

ECM: 301751 - 20070402
Group number: 1558769-0200
Assembly Drawing: 1558769-2_1_AA

Pos	Part No	UN	Qty	Description	Page No
A3/FLEX					
090	1038866-0000		1	INTERMEDIARY SECTION	
390	315229-0203		1	GASKET 22,1X30,1X3,7 MM 1"	
440	312605-0318		3	HEXAGON NUT, M6M M8 A280	
470	312105-0453		3	SCREW M6S ISO 4017 M8X25 A480	
Common Parts					
030	2685246-0000		1	PIPE	
060	2685247-0000		1	UPPER SECTION	
070	1538169-0000		1	HOLDER	
080	1490963-0000		1	PIPE	
100	1038634-0000		1	DRAINING	
110	1036811-0000		2	CLAMP	
120	560931-0000		1	BRACKET	
130	546929-0000		1	FILTER	
140	2685375-0000		1	RETAINING RING	
300	352103-0101		1	CABLE GLAND, ST 9, PR15,2/PG9	
320	342850-0408		1	GASKET 97X117,7X5,2 MM 4" FDA	
330	342850-0405		1	GASKET 47,8X62,6X5,2 MM 2" FDA	
340	342840-0108		1	CLAMP, 101,6 MM 3-A PCS+PMCS	
350	342840-0105		1	CLAMPING PIECE, GH13LAH2304NO79612011202	
370	342738-0221		1	ADJUSTABLE ELBOW CONNECTION,EXT 15-G1/2	
380	342206-0109		1	BUSHING, TAPERED, INT/EXT. THR NO. R211	
400	315204-0317		1	O-RING 129,5X3 MM	
410	315204-0213		1	O-RING 15,2X2,4 MM	
430	315105-0136		3	WASHER BRB 4,3X8 RFR	
450	312605-0312		2	HEXAGON NUT, M6M M4 A280	
460	312125-0285		1	SCREW ISO 1207 M4X6 A4	
480	312105-0381		4	SCREW M6S ISO 4014 M6X55 A480	
600	90360-0305		1	FLOAT, ART NO 10739920	
610	90157-0037		1	THREAD SEALANT LOCTITE 542	
620	90132-0030		1	SUPORTE MV 87177 KS 580T	
630	90099-0104		1	NUT, PR 15,2 (PG9)	
640	90043-0095		1	PRESSURE GAUGE, 2740, D=63 MM, GLYC.	
700	90144-0073		1	TREBOFLON-TAPE W=13MM	
B1104	979500-0003		1	ELECTRODE	

Pos	Part No	UN	Qty	Description	Page No

HEAT EXCHANGER VALVE

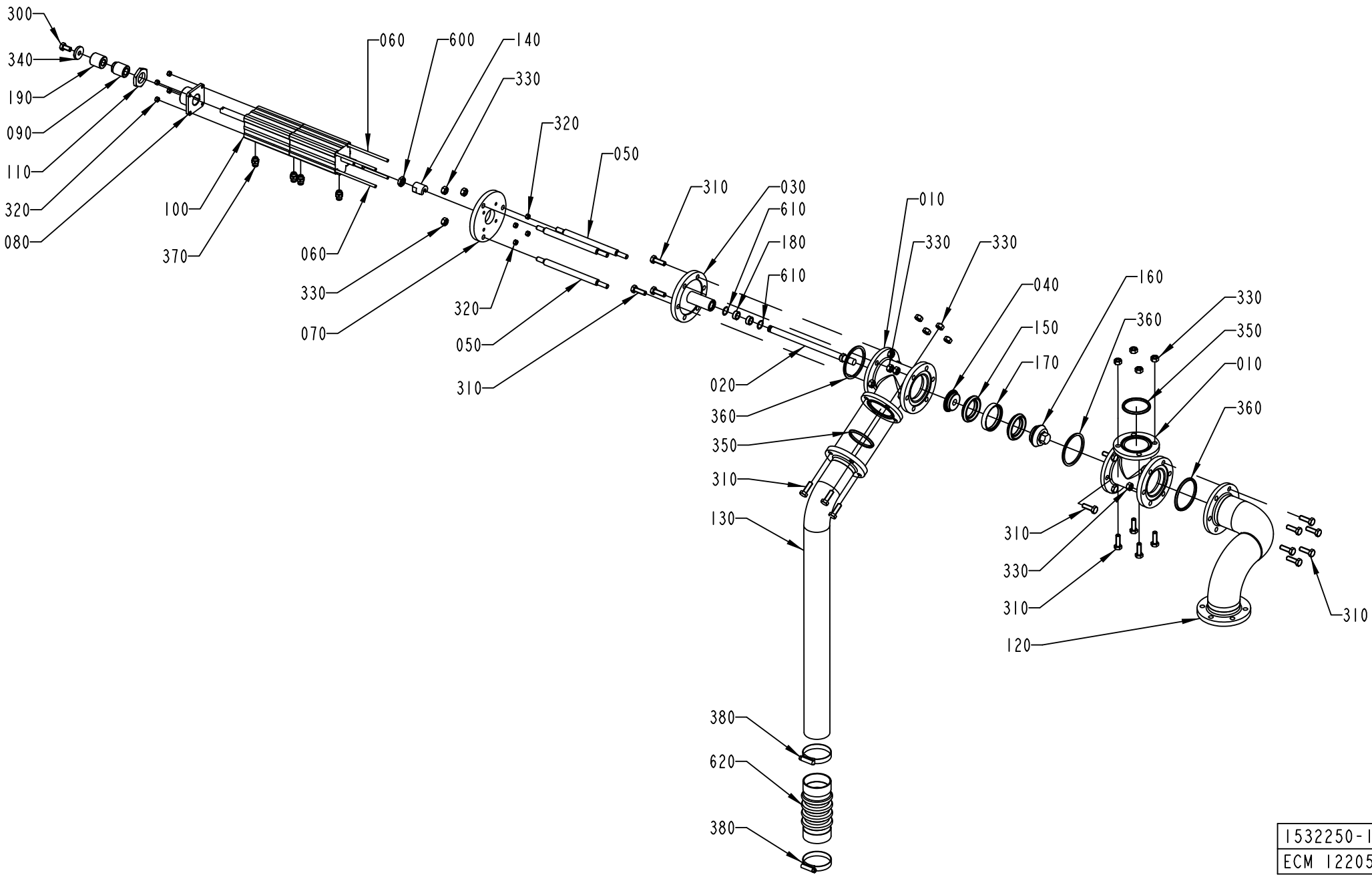

1532250-1
ECM 122050

ECM: 271744 - 20080402
Group number: 1532250-0100
Assembly Drawing: 1532250-1_1_AB

Pos	Part No	UN	Qty	Description	Page No
-					
010	1036187-0000		2	T-PIPE	
020	1036188-0000		1	SHAFT	
030	1036189-0000		1	SPINDEL GUIDE	
040	1036191-0000		1	SEAL HOLDER	
050	1036192-0000		3	SPACER ROD	
060	1346656-0000		4	ROD	
070	1346657-0000		1	CYLINDER BRACKET	
080	1346658-0000		1	BRACKET	
090	1346659-0000		1	SCREW	
100	1346677-0000		1	CYLINDER	
110	1349398-0000		1	NUT	
120	1538157-0000		1	PIPE	
130	1538158-0000		1	PIPE	
140	441871-0000		1	PENDULUM SUSPENSION	
150	530589-0000		2	SEAL RING	
160	530590-0000		1	VALVE CONE	
170	530599-0000		1	RING	
180	532349-0000		2	PLAIN BEARING	
190	2532968-0000		1	BUSHING	
300	312105-0449		1	SCREW M6S ISO 4017 M8X16 A480	
310	312105-0453		23	SCREW M6S ISO 4017 M8X25 A480	
320	312605-0314		8	HEXAGON NUT, M6M M5 A280	
330	312605-0318		29	HEXAGON NUT, M6M M8 A280	
340	315125-0165		1	WASHER TBRSB 8,4X26X5 A4	
350	315229-0205		2	GASKET 47,5X55,5X3,7 MM 2 INCH	
360	315229-0206		3	GASKET 60,2X68,2X3,7 MM 2"1/2	
370	342722-0202		4	PIPE COUPLING 1/8" D=6MM	
380	342991-0109		2	HOSE CLIP,WORM DRIVE TYPE (48)-50	
600	90099-0051		1	NUT HEX. M10X1,25, FE FZB	
610	90141-0022		2	SNAP RING B 16	
620	90342-0022		1	BELLOWS	

Pos	Part No	UN	Qty	Description	Page No

Machine Type | Group Description | Used-In | Group Number | Page No

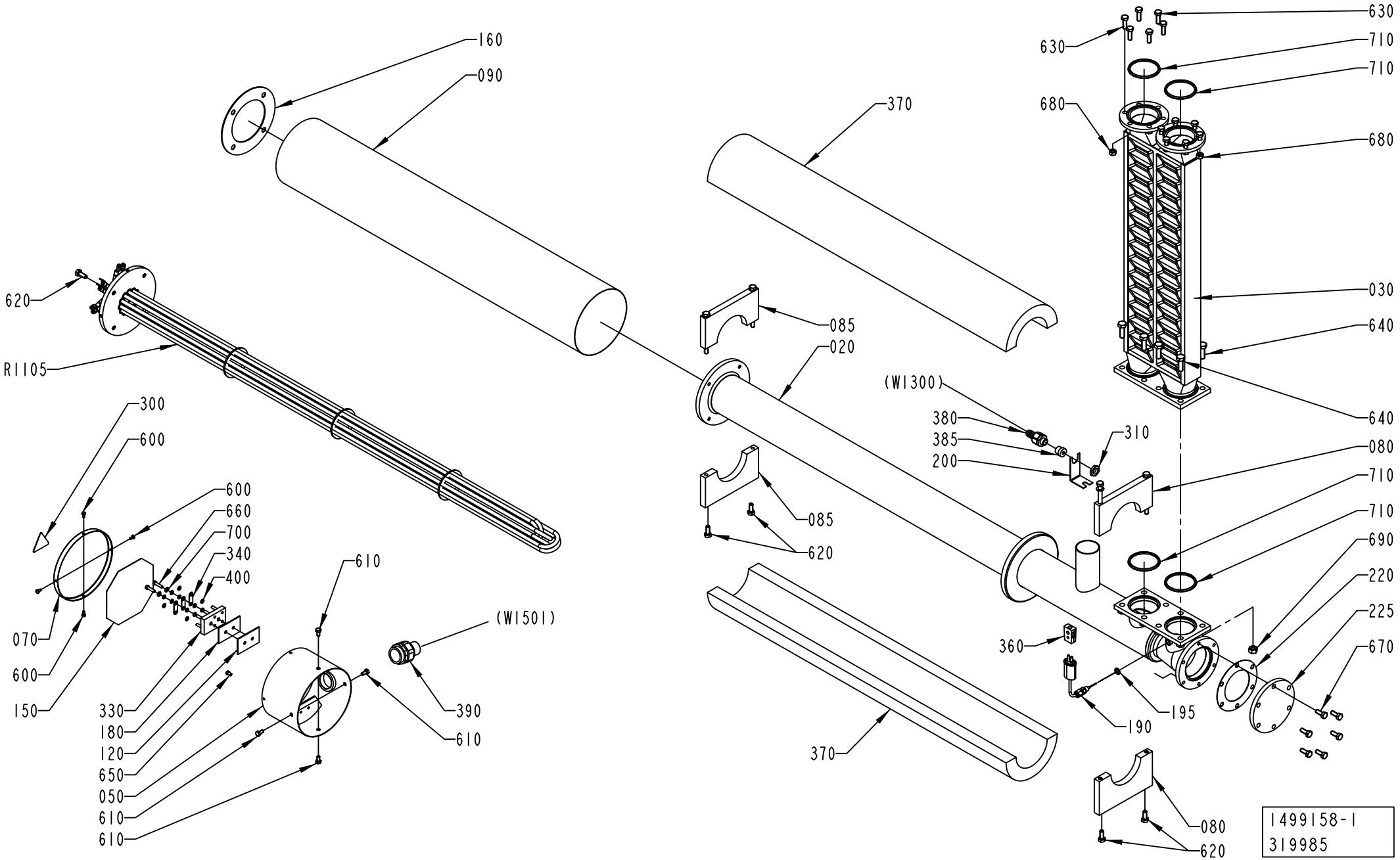
160
090
620
R1105
300
600
600
660
700
340
400
070
600
150
330
180
120
650
050
610
610
610
(W1501)
390
610
370
085
020
085
620
370
630
630
710
710
680
680
030
640
640
(W1300)
380
385
200
310
080
710
710
690
220
225
670
360
195
190
080
620
1499158-1
319985

ECM: 326044 - 20080103
Group number: 1499158-0100
Assembly Drawing: 1499158-1_1_AD

Pos	Part No	UN	Qty	Description	Page No
A3/FLEX					
030	1347245-0000		1	HEAT EXCHANGER	
Common Parts					
020	1499157-0000		1	HEATING PIPE	
050	451430-0000		1	CONNECTION HOUS.(MINOR)	
070	29876-0000		1	COVER	
080	456123-0000		1	SUPPORT	
	312105-0471		*2*	*SCREW M6S ISO 4014 M8X100 A480*	
	315105-0165		*2*	*WASHER BRB 8,4X16 RFR*	
085	1484080-0000		1	SUPPORT	
090	1036372-0000		1	PIPE	
120	30298-0000		1	INSULATION	
150	491305-0000		1	CONN.DIAGRAM AIR SUPERH.	
160	531731-0000		1	GASKET	
180	751009-0000		1	INSULATION	
190	90326-0051		1	THERMOCOUPLE, 12826-33	
195	273429-0000		1	WASHER	
200	1036373-0000		1	HOLDER	
220	927454-0000		1	GASKET	
225	1490962-0000		1	LID	
300	359705-0015		1	WARNING SIGN ISO, RISK OF ELECTRIC SHOCK	
310	90099-0104		1	NUT, PR 15,2 (PG9)	
320	90153-0020		1	ADHESIVE, BOSTIK 1782 125ML	
330	90195-0028		1	TERMINAL BLOCK, 6440	
340	90195-0029		3	CONN. LINK NO324 FOR -28	
360	90326-0020		1	PLUG, FEMALE YELLOW CR-AL	
370	90411-0005	MM	900	INSULATION 1200MM SERIE 21 89/154X30	
380	353243-0001		1	HOSE GLAND W/O INSERT PG9 EXTENDED	
385	353249-0008		1	INSERT, SINGLE HOLE, EK 152/7	
390	90012-0126		1	HOSE GLAND W/O INSERT PG29 NORMAL	
400	315402-0146		12	LOCK WASHER FBB 5,1	
600	312105-0287		4	SCREW M6S ISO 4017 M4X8 A470	
610	312105-0366		4	SCREW M6S ISO 4017 M6X12 A480	
620	312105-0451		8	SCREW M6S ISO 4017 M8X20 A480	
630	312105-0453		12	SCREW M6S ISO 4017 M8X25 A480	
640	312105-0495		8	SCREW M6S ISO 4017 M10X30 A480	
650	312125-0323		1	SCREW ISO 1207 M5X8 A4	
660	312125-0331		2	SCREW ISO 1207 M5X20 A4	
670	312105-0451		6	SCREW M6S ISO 4017 M8X20 A480	
680	312605-0318		12	HEXAGON NUT, M6M M8 A280	
690	312605-0320		8	HEXAGON NUT, M6M M10 A280	
700	315105-0146		2	WASHER BRB 5,3X10 RFR	
710	315229-0206		4	GASKET 60,2X68,2X3,7 MM 2"1/2	
R1105	90600-2007		1	HEATING ELEM.15KW 3X230/400V,T90600-2007	

Machine Type	Group Description	Used-In	Group Number	Page No

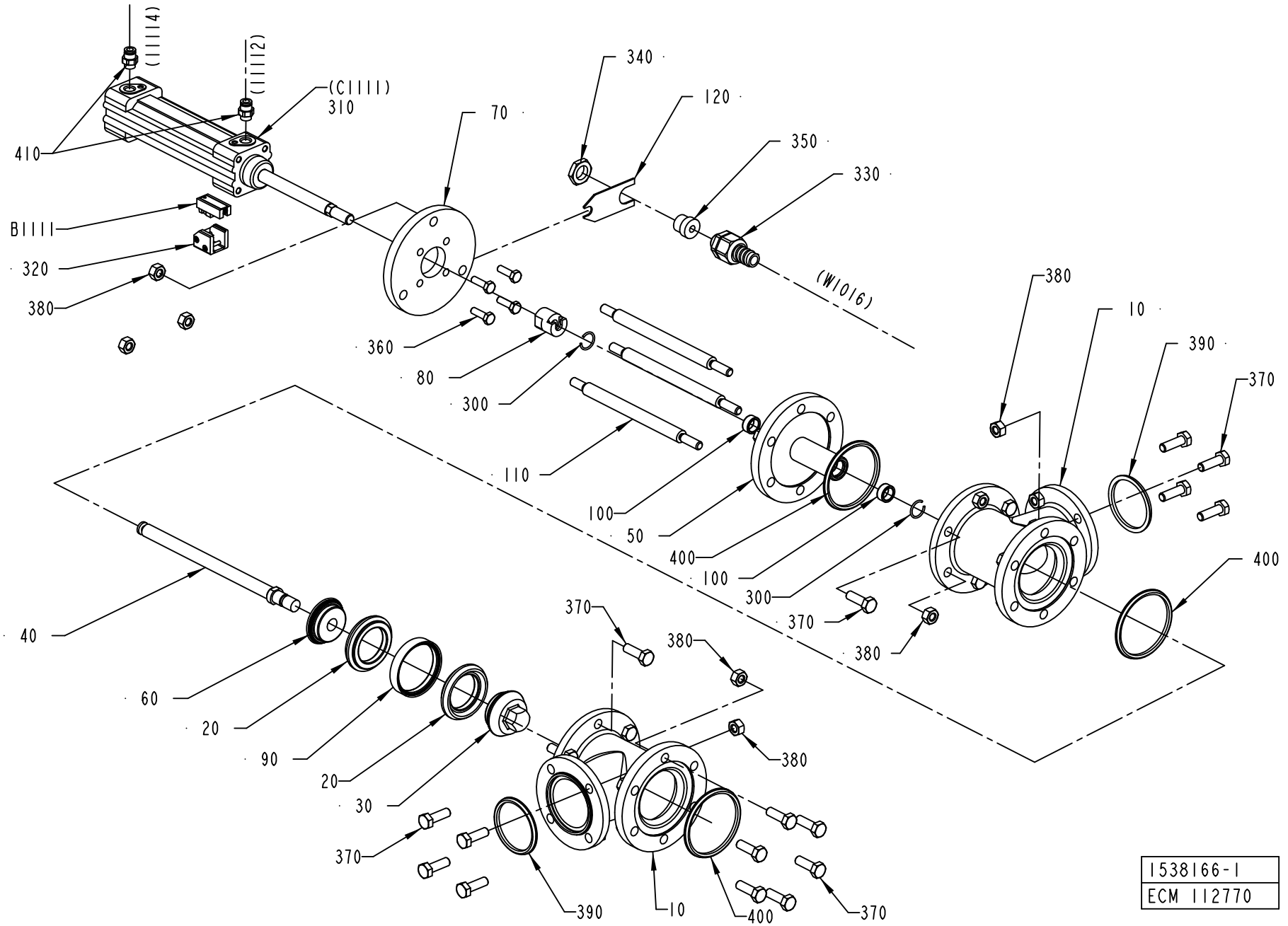
(11114)
(11112)
(C1111)
310
410
B1111
320
380
70
340
120
350
330
(W1016)
360
80
300
110
100
50
400
100
300
370
380
380
10
390
370
400
40
60
20
90
20
30
370
370
380
380
390
10
400
370
1538166-1
ECM 112770

ECM: 348494 - 20090402
Group number: 1538166-0100
Assembly Drawing: 1538166-1_1_AA

Pos	Part No	UN	Qty	Description	Page No
-					
010	1036187-0000		2	T-PIPE	
020	530589-0000		2	SEAL RING	
030	530590-0000		1	VALVE CONE	
040	1036188-0000		1	SHAFT	
050	1036189-0000		1	SPINDEL GUIDE	
060	1036191-0000		1	SEAL HOLDER	
070	1036193-0000		1	CYLINDER BRACKET	
080	441871-0000		1	PENDULUM SUSPENSION	
090	530599-0000		1	RING	
100	532349-0000		2	PLAIN BEARING	
110	1036192-0000		3	SPACER ROD	
120	1036293-0000		1	HOLDER	
300	90141-0022		2	SNAP RING B 16	
310	90450-0281		1	DOUBLE ACTING,PROF.CYL 32-80	
320	90450-0669		1	SENSOR, BRACKET SERIES 168	
330	353243-0001		1	HOSE GLAND W/O INSERT PG9 EXTENDED	
340	90099-0104		1	NUT, PR 15,2 (PG9)	
350	353249-0008		1	INSERT, SINGLE HOLE, EK 152/7	
360	312105-0370		4	SCREW M6S ISO 4017 M6X20 A480	
370	312105-0453		23	SCREW M6S ISO 4017 M8X25 A480	
380	312605-0318		31	HEXAGON NUT, M6M M8 A280	
390	315229-0205		2	GASKET 47,5X55,5X3,7 MM 2 INCH	
400	315229-0206		3	GASKET 60,2X68,2X3,7 MM 2"1/2	
410	342722-0202		2	PIPE COUPLING 1/8" D=6MM	
B1111	90457-0047		1	SENSOR 2750-1-5111-1 W.ADAPTER PNP	

Pos	Part No	UN	Qty	Description	Page No

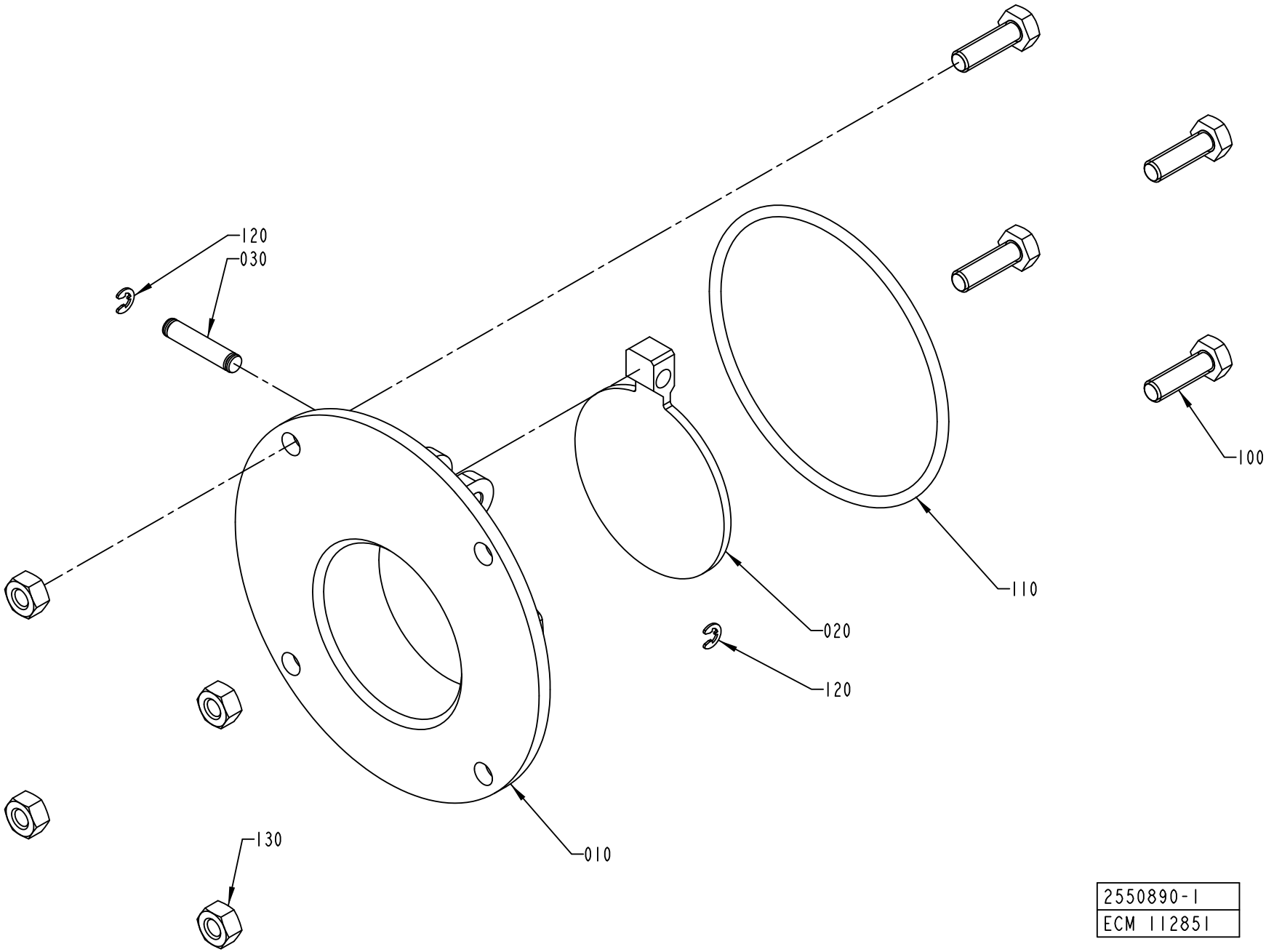

2550890-1
ECM 112851

ECM: 387758 - 20090402
Group number: 2550890-0100
Assembly Drawing: 2550890-1_1_AA

Pos	Part No	UN	Qty	Description	Page No
-					
010	1558417-0000		1	FLANGE	
020	1538494-0000		1	LID	
030	311103-0310		1	PARALLEL PIN ISO 2338 5M6X20 A1	
100	312105-0370		4	SCREW M6S ISO 4017 M6X20 A480	
110	315204-0307		1	O-RING 79,5X3 MM	
130	312605-0316		4	HEXAGON NUT, M6M M6 A280	

Pos	Part No	UN	Qty	Description	Page No

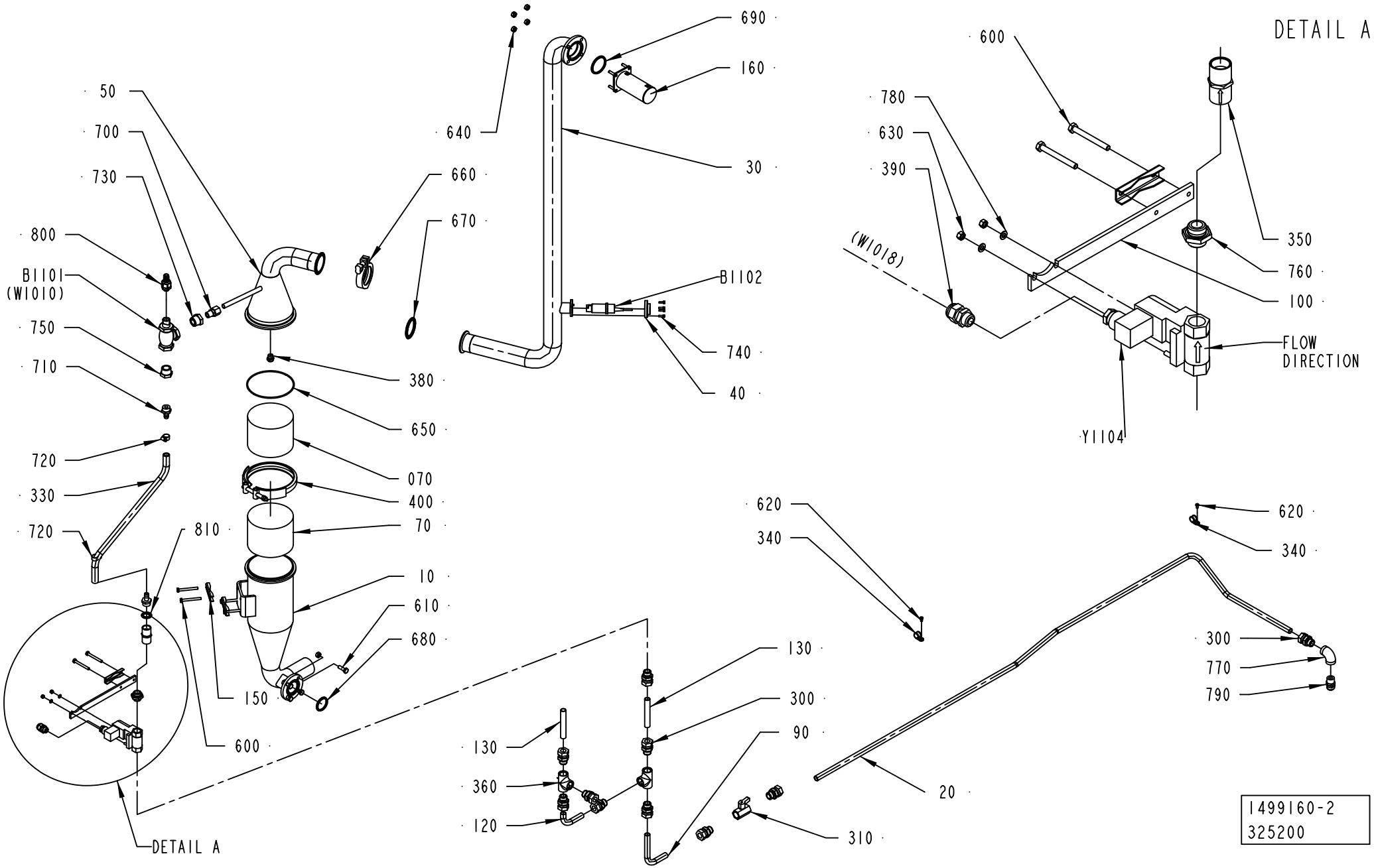
DETAIL A
690
160
640
30
660
670
B1102
740
40
50
700
730
800
B1101
(W1010)
750
710
720
330
720
380
650
070
400
70
810
10
610
680
150
600
DETAIL A
600
780
630
390
(W1018)
350
760
100
FLOW
DIRECTION
Y1104
620
340
620
340
300
770
790
130
300
90
130
360
120
310
20
1499160-2
325200

ECM: 388963 - 20090402
Group number: 1499160-0200
Assembly Drawing: 1499160-2_1_AE

Pos	Part No	UN	Qty	Description	Page No
A3/FLEX					
010	1036911-0000		1	CONTAINER	
030	2685271-0000		1	PIPE	
040	2547211-0000		1	FLANGE	
050	1499172-0000		1	UPPER SECTION	
350	90270-0349		1	CONSTANT FLOW VALVE, 1/2"X1/2" 2GPM	
380	90424-0054		1	SPRAY NOZZLE 120 DEG	
610	312105-0453		4	SCREW M6S ISO 4017 M8X25 A480	
640	312605-0318		8	HEXAGON NUT, M6M M8 A280	
680	315229-0204		1	GASKET 34,8X42,8X3,7 MM 1"1/2	
740	312115-0291		4	SCREW ISO4762 M4X12 A4 80	
B1101	90459-0711		1	FLOW SENSOR FS-400 SERIES / 26440	
B1102	90600-2960		1	AIR FLOW SENSOR 0-30 M/S VENT-CAPTOR	
Common Parts					
020	2851885-0000		1	PIPE	
070	546929-0000		2	FILTER	
090	2519437-0000		1	TUBE	
100	1037041-0000		1	HOLDER	
120	2519439-0000		1	TUBE	
130	2519440-0000		2	TUBE	
150	1036811-0000		3	CLAMP	
160	2685284-0000		1	FILTER	
300	90030-0188		10	CONN. STR. GA-15-G1/2	
310	90187-0062		1	BALL VALVE G1/2, NPBR	
330	90166-0121	MM	450	HOSE	
340	90165-0039		2	PIPE CLAMP D=15 MM, GSK15/12	
360	90330-0049		2	T-PIPE, INT. THREAD, R-221R1/2	
390	352103-0101		1	CABLE GLAND, ST 9, PR15,2/PG9	
400	90132-0030		1	SUPORTE MV 87177 KS 580T	
410	90144-0073		1	TREBOFLON-TAPE W=13MM	
420	90157-0037		1	THREAD SEALANT LOCTITE 542	
600	312105-0381		6	SCREW M6S ISO 4014 M6X55 A480	
620	312125-0323		2	SCREW ISO 1207 M5X8 A4	
630	312605-0314		2	HEXAGON NUT, M6M M5 A280	
650	315204-0317		1	O-RING 129,5X3 MM	
660	342840-0105		1	CLAMPING PIECE, GH13LAH2304NO79612011202	
670	342850-0405		1	GASKET 47,8X62,6X5,2 MM 2" FDA	
690	315229-0205		1	GASKET 47,5X55,5X3,7 MM 2 INCH	
700	90030-0181		1	CONN. STR. GE12L3/8NPT71	
710	342901-0105		2	HOSE NIPPLE, EXT.THR. R1/2-12 MM	
720	342991-0101		2	HOSE CLIP,WORM DRIVE TYPE (13)-16	
730	90330-0078		1	BUSHING, INT/EXT. THR. R3/4-RP3/8	
750	342206-0109		1	BUSHING, TAPERED, INT/EXT. THR NO. R211	
760	479261-0000		1	NIPPLE	
770	90330-0020		1	ELBOW, 90 INT. THREAD, R-2221/2	
780	315105-0146		2	WASHER BRB 5,3X10 RFR	
790	342920-0151		1	STRAIGHT COUPL.,EXT.THREAD.15/12,5-R1/2"	
800	353243-0001		1	HOSE GLAND W/O INSERT PG9 EXTENDED	
810	315211-0111		1	BONDED SEAL SS/NBR90 G1/2	
Y1104	90042-0172		1	SOLENOID VALVE 4023/1005/1032 24VDC	
	90042-0467		*1*	*COIL 24VDC GSR*	

Machine Type | Group Description | Used-In | Group Number | Page No

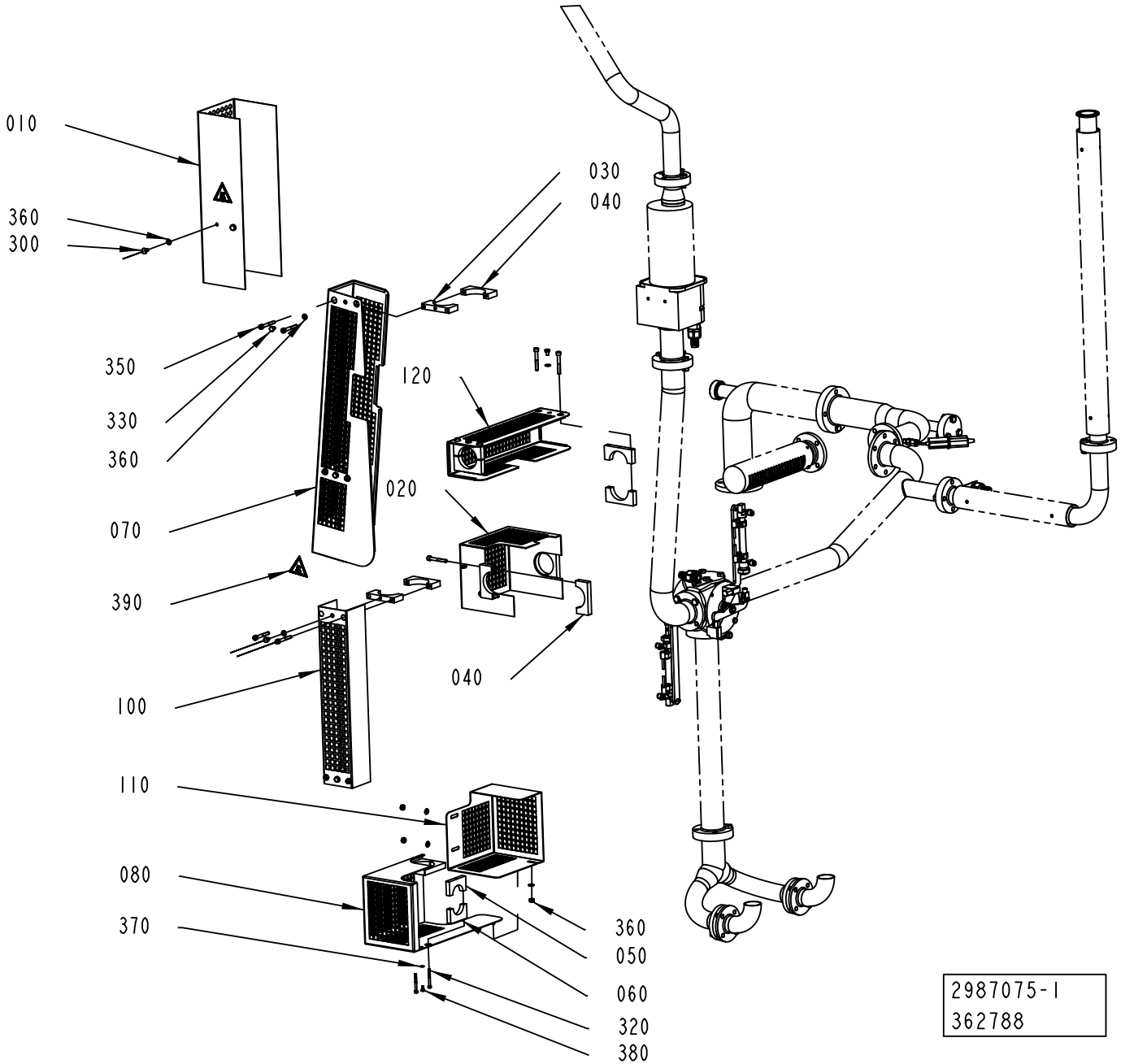
010
360
300
350
330
360
070
390
100
110
080
370
030
040
120
020
040
360
050
060
320
380
2987075-1
362788

ECM: 367213 - 20090101
Group number: 2987075-0100
Assembly Drawing: 2987075-1_1_AA

This list covers pages from 1-236 to 1-239

Pos	Part No	UN	Qty	Description	Page No
A3/FLEX HI (See drawing on page: 1-238)					
030	2994370-0000		7	CLAMP	
040	2994371-0000		9	CLAMP	
100	2997144-0000		1	COVER	
310	315101-0153		9	WASHER PLAIN, BRB, 6,4/12 H=1,5	
330	312105-0362		7	SCREW M6S ISO 4017 M6X8 A480	
350	312115-0379		18	SCREW ISO4762 M6X45 A4 80	
A3/FLEX NOHI (See drawing on page: 1-236)					
030	2994370-0000		7	CLAMP	
040	2994371-0000		9	CLAMP	
100	2997144-0000		1	COVER	
110	2993777-0000		1	COVER	
310	315101-0153		12	WASHER PLAIN, BRB, 6,4/12 H=1,5	
330	312105-0362		7	SCREW M6S ISO 4017 M6X8 A480	
350	312115-0379		18	SCREW ISO4762 M6X45 A4 80	
360	312605-0316		3	HEXAGON NUT, M6M M6 A280	
Common Parts					
010	2829288-0000		1	COVERING PLATE	
020	2993129-0000		1	COVER	
050	2994372-0000		1	CLAMP	
060	2994373-0000		1	CLAMP	
070	2993128-0000		1	COVER	
080	2993130-0000		1	COVER	
120	2993778-0000		1	COVER	
300	90600-0657		2	SCREW UNC 1/4-20 X10	
320	312115-0303		2	SCREW ISO4762 M4X40 A4 80	
370	315105-0136		1	WASHER BRB 4,3X8 RFR	
380	312105-0287		1	SCREW M6S ISO 4017 M4X8 A470	
390	359705-0007		2	WARNING SIGN ISO, HOT SURFACE	

Pos	Part No	UN	Qty	Description	Page No

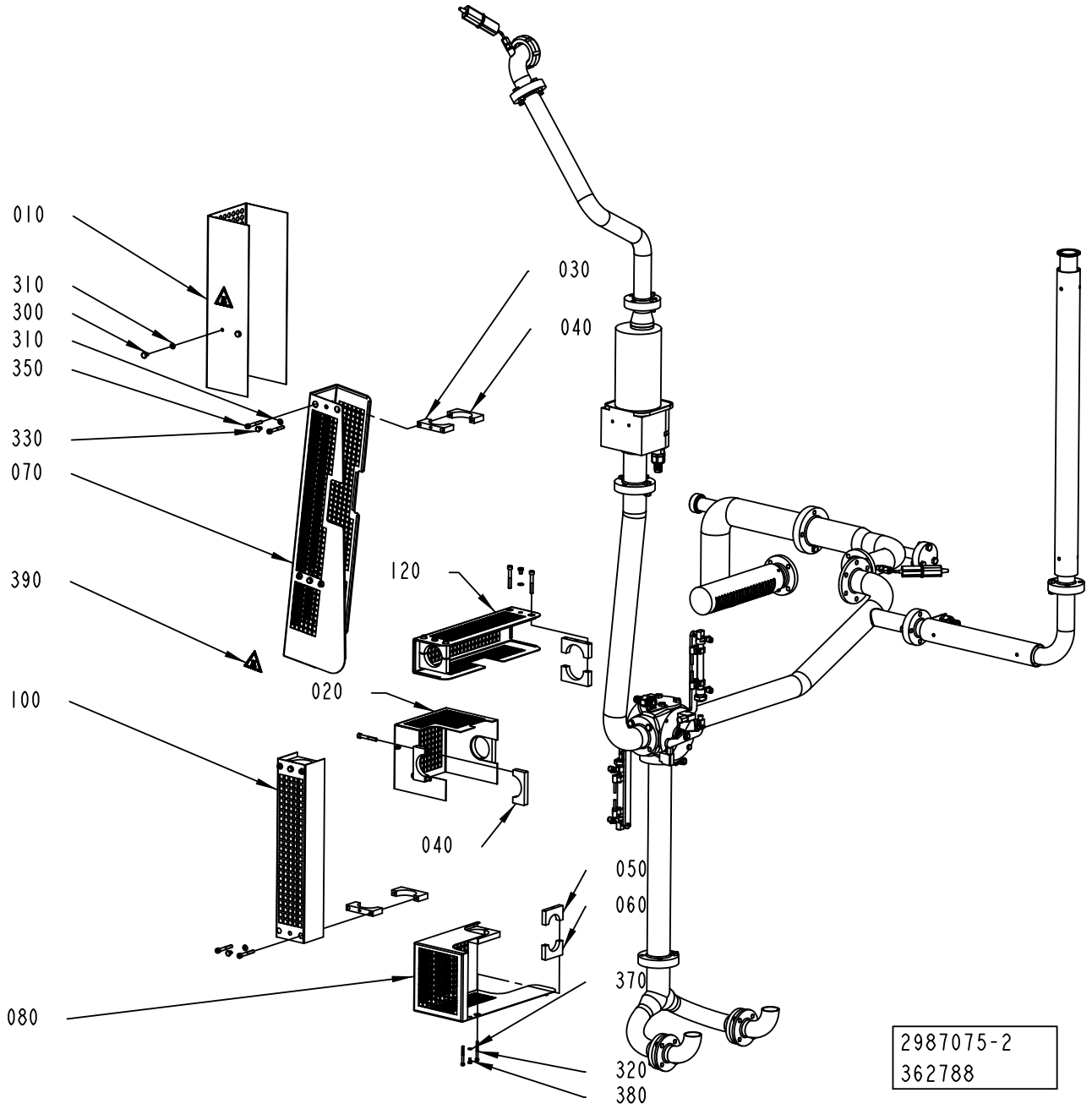
010
310
300
310
350
330
070
390
100
080
030
040
120
020
040
050
060
370
320
380
2987075-2
362788

ECM: 367213 - 20090101
Group number: 2987075-0100
Assembly Drawing: 2987075-2_1_AA

This list covers pages from 1-236 to 1-239

Pos	Part No	UN	Qty	Description	Page No
A3/FLEX HI (See drawing on page: 1-238)					
030	2994370-0000		7	CLAMP	
040	2994371-0000		9	CLAMP	
100	2997144-0000		1	COVER	
310	315101-0153		9	WASHER PLAIN, BRB, 6,4/12 H=1,5	
330	312105-0362		7	SCREW M6S ISO 4017 M6X8 A480	
350	312115-0379		18	SCREW ISO4762 M6X45 A4 80	
A3/FLEX NOHI (See drawing on page: 1-236)					
030	2994370-0000		7	CLAMP	
040	2994371-0000		9	CLAMP	
100	2997144-0000		1	COVER	
110	2993777-0000		1	COVER	
310	315101-0153		12	WASHER PLAIN, BRB, 6,4/12 H=1,5	
330	312105-0362		7	SCREW M6S ISO 4017 M6X8 A480	
350	312115-0379		18	SCREW ISO4762 M6X45 A4 80	
360	312605-0316		3	HEXAGON NUT, M6M M6 A280	
Common Parts					
010	2829288-0000		1	COVERING PLATE	
020	2993129-0000		1	COVER	
050	2994372-0000		1	CLAMP	
060	2994373-0000		1	CLAMP	
070	2993128-0000		1	COVER	
080	2993130-0000		1	COVER	
120	2993778-0000		1	COVER	
300	90600-0657		2	SCREW UNC 1/4-20 X10	
320	312115-0303		2	SCREW ISO4762 M4X40 A4 80	
370	315105-0136		1	WASHER BRB 4,3X8 RFR	
380	312105-0287		1	SCREW M6S ISO 4017 M4X8 A470	
390	359705-0007		2	WARNING SIGN ISO, HOT SURFACE	

Pos	Part No	UN	Qty	Description	Page No

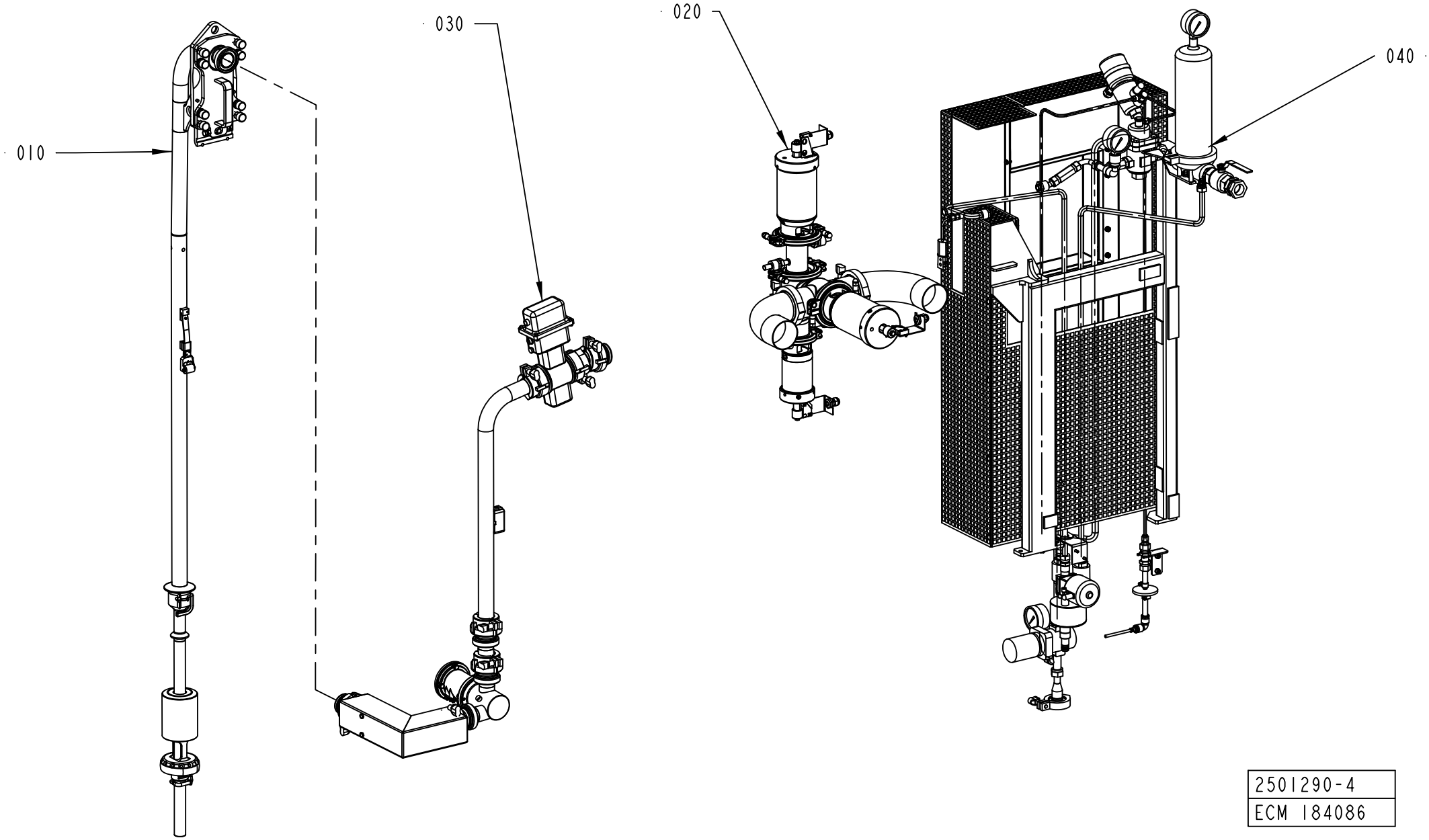

2501290-4
ECM 184086

ECM: 378428 - 20090401
Group number: 2501290-0200
Assembly Drawing: 2501290-4_1_AA

This list covers pages from 1-240 to 1-243

Pos	Part No	UN	Qty	Description	Page No
A3/FLEX HI (See drawing on page: 1-242)					
010	2501310-0100		1	FILLING PIPE	**1-245, 1-247, 1-249, 1-251**
060	2656910-0200		1	HEAD SPACE BY INJECTION	**1-253**
A3/FLEX NOHI (See drawing on page: 1-240)					
010	2501310-0100		1	FILLING PIPE	**1-245, 1-247, 1-249, 1-251**
Common Parts					
020	1558494-0200		1	PRODUCT VALVE	**1-265**
030	2507060-0200		1	PRODUCT LINES	**1-279, 1-281**
040	2545651-0200		1	STEAM SYSTEM	**1-289**

Pos	Part No	UN	Qty	Description	Page No

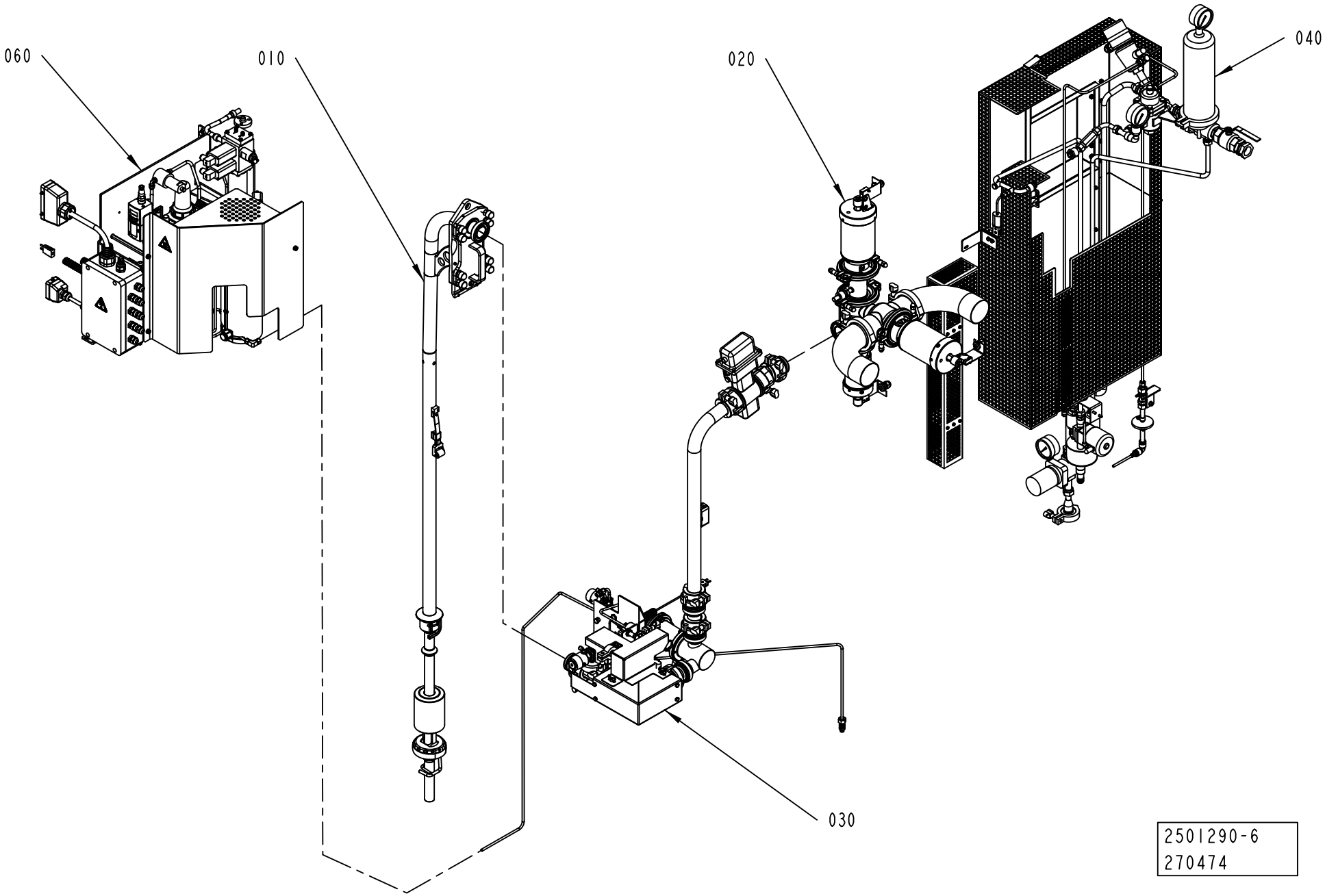
060
010
020
040
030
2501290-6
270474

ECM: 378428 - 20090401
Group number: 2501290-0200
Assembly Drawing: 2501290-6_1_AB

This list covers pages from 1-240 to 1-243

Pos	Part No	UN	Qty	Description	Page No
A3/FLEX HI (See drawing on page: 1-242)					
010	2501310-0100		1	FILLING PIPE	**1-245, 1-247, 1-249, 1-251**
060	2656910-0200		1	HEAD SPACE BY INJECTION	**1-253**
A3/FLEX NOHI (See drawing on page: 1-240)					
010	2501310-0100		1	FILLING PIPE	**1-245, 1-247, 1-249, 1-251**
Common Parts					
020	1558494-0200		1	PRODUCT VALVE	**1-265**
030	2507060-0200		1	PRODUCT LINES	**1-279, 1-281**
040	2545651-0200		1	STEAM SYSTEM	**1-289**

Pos	Part No	UN	Qty	Description	Page No

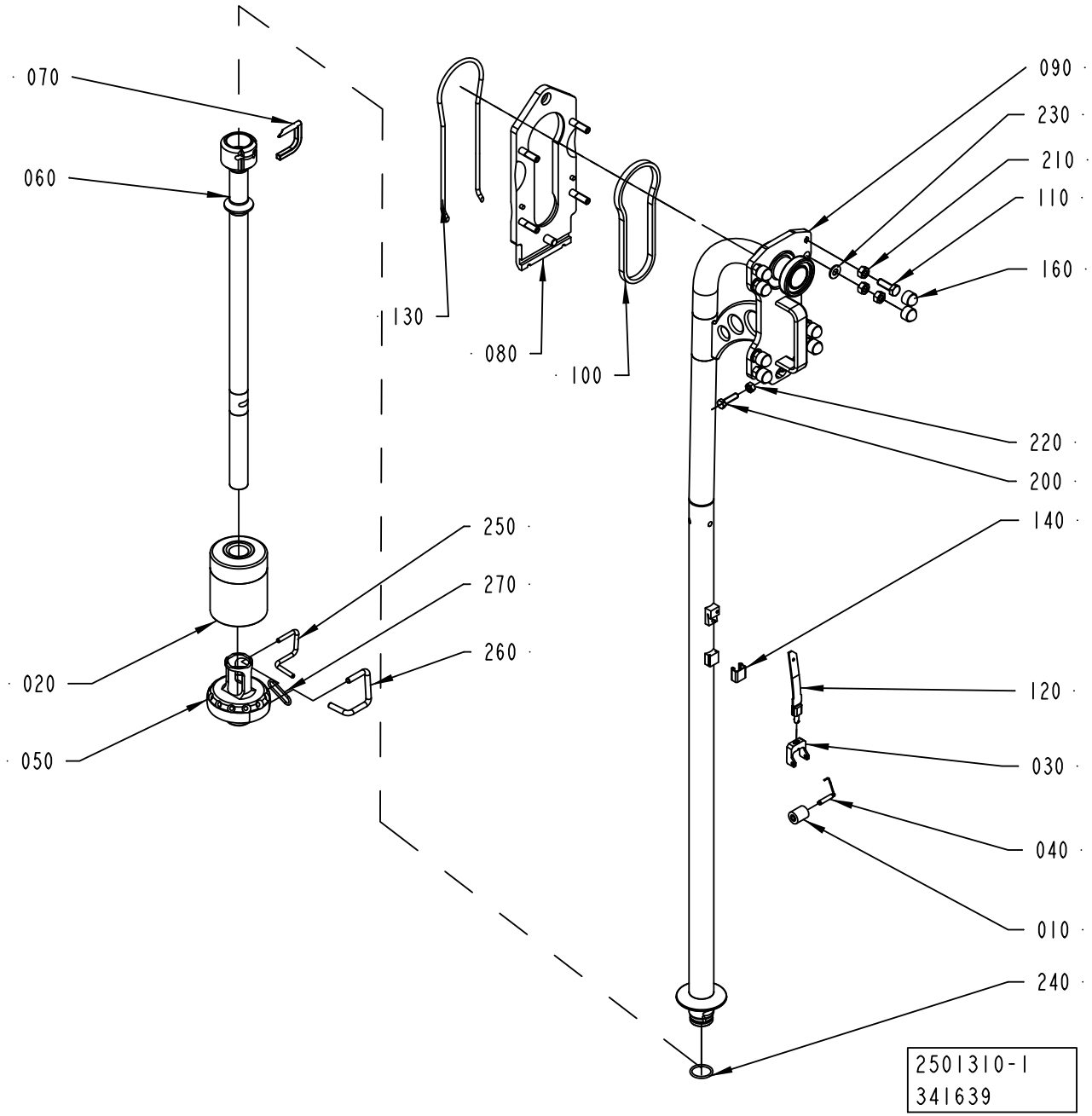
070
060
130
080
100
090
230
210
110
160
220
200
140
250
270
260
020
050
120
030
040
010
240
2501310-1
341639

ECM: 389753 - 20090404
Group number: 2501310-0100
Assembly Drawing: 2501310-1_1_AG

This list covers pages from 1-244 to 1-251

Pos	Part No	UN	Qty	Description	Page No
TBA 1500S (See drawing on page: 1-244)					
010	232979-0000		1	PRESSURE ROLLER (PAK OF 10)	
020	2597531-0000		1	FLOAT	
	2878907-0000		*1*	*CUTTING ARM*	
030	1348048-0000		1	FORK	
040	2523268-0000		1	SHAFT	
050	2598017-0000		1	PRESSURE FLANGE	
060	2826467-0000		1	FILLING PIPE	
070	2809846-0000		1	STOP PIN	
090	2826478-0000		1	FILLING PIPE	
120	2826393-0000		1	SPRING	
140	14600-0000		1	HOOD	
240	315204-0219		1	O-RING 29,2X3 MM	
250	2803986-0000		1	STOP PIN	
260	2803987-0000		1	STOP PIN	
270	2886173-0000		1	LOCKING RING	
TBA 1890S QC, TBA 2000S QC, TBA 1400B (See drawing on pages: 1-248, 1-250)					
010	232979-0000		2	PRESSURE ROLLER (PAK OF 10)	
020	2634995-0000		1	FLOAT	
030	1538952-0000		1	FORK	
040	1538953-0000		1	SHAFT	
050	3004968-0000		1	FLANGE	
060	3004969-0000		1	PIPE	
070	2809849-0000		1	STOP PIN	
090	2832554-0000		1	FILLING PIPE	
120	2826397-0000		1	SPRING	
140	2672994-0000		1	HOOD	
170	24928-0000		4	LOCKING RUBBER	
185	2638077-0000		2	SHAFT	
190	2685285-0000		1	BRACKET	
240	315204-0223		1	O-RING 39,2X3 MM	
260	2881463-0000		1	LOCKING DEVICE	
TGA 1000SQ, TGA 0750SQ, TGA 0500SQ (See drawing on page: 1-244)					
010	257330-0000		1	PRESSURE ROLLER (10 PCS)	
020	2826457-0000		1	FLOAT	
030	1348049-0000		1	FORK	
040	2529420-0000		1	SHAFT	
050	2651707-0000		1	PRESSURE FLANGE	
060	2960448-0000		1	LOWER FILLING TUBE	
070	2809846-0000		1	STOP PIN	
090	2960579-0000		1	FILLING PIPE	
120	2894434-0000		1	SPRING	
140	14600-0000		1	HOOD	
240	315204-0219		1	O-RING 29,2X3 MM	
250	2803986-0000		1	STOP PIN	
260	2803987-0000		1	STOP PIN	
270	2886173-0000		1	LOCKING RING	
TPA 0250SQ, TPA 0200SQ (See drawing on page: 1-246)					
010	272479-0000		1	PRESSURE ROLLER (10PCS)	
020	2826456-0000		1	FLOAT	
030	255978-0000		1	FORK	
040	2529416-0000		1	SHAFT	
050	2809851-0000		1	PRESSURE FLANGE	
060	2731438-0000		1	FILLING PIPE	
070	2809845-0000		2	STOP PIN	
075	2887700-0000		1	STOP PIN	
090	2826479-0000		1	FILLING PIPE	
120	2826389-0000		1	SPRING	
140	295377-0001		1	HOOD	
150	1499114-0000		1	LOCK RING	
240	315204-0215		1	O-RING 19,2X3 MM	
TPA 0330SQ (See drawing on page: 1-246)					
010	257330-0000		1	PRESSURE ROLLER (10 PCS)	
020	2826454-0000		1	FLOAT	
030	1348047-0000		1	FORK	
040	2529417-0000		1	SHAFT	
050	2601470-0000		1	PRESSURE FLANGE	
060	2826470-0000		1	FILLING PIPE	
070	2809845-0000		2	STOP PIN	
075	2563292-0000		1	STOP PIN	
090	2826479-0000		1	FILLING PIPE	
120	2826396-0000		1	SPRING	
140	295377-0003		1	HOOD	
150	1498143-0000		1	LOCK RING	
240	315204-0215		1	O-RING 19,2X3 MM	
TPA 0500SQ (See drawing on page: 1-244)					
010	2607089-0000		1	PRESSURE ROLLER	
020	2826455-0000		1	FLOAT	
030	2673015-0000		1	FORK	
040	2673021-0000		1	SHAFT	
050	2601474-0000		1	PRESSURE FLANGE	
060	2885429-0000		1	FILLING PIPE	
070	2809847-0000		1	STOP PIN	
090	2832555-0000		1	FILLING PIPE	

Machine Type	Group Description	Used-In	Group Number	Page No

FILLING PIPE

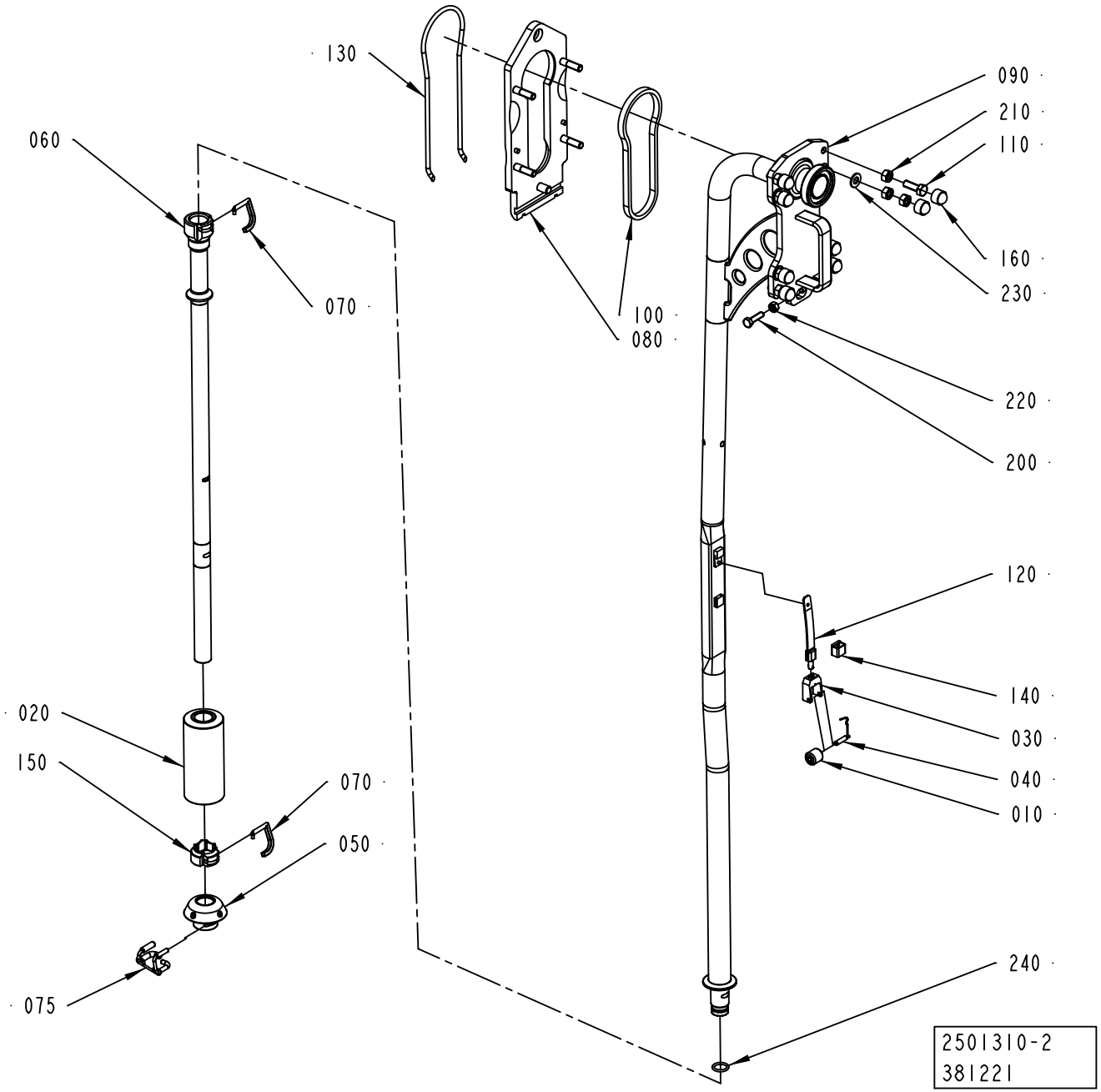

Pos	Part No	UN	Qty	Description	Page No
TPA 0500SQ (Cont'd) (See drawing on page: 1-244)					
120	2959681-0000		1	SPRING	
140	2959682-0000		1	HOOD	
240	315204-0219		1	O-RING 29,2X3 MM	
250	2803986-0000		1	STOP PIN	
260	2803987-0000		1	STOP PIN	
270	2886173-0000		1	LOCKING RING	
TPA 1000SQ QC, TPA 0750SQ QC (See drawing on page: 1-248)					
010	2607089-0000		2	PRESSURE ROLLER	
020	2826457-0000		1	FLOAT	
030	2715652-0000		1	FORK	
040	2634972-0000		1	SHAFT	
050	2570017-0000		1	PRESSURE FLANGE	
060	2770494-0000		1	FILLING PIPE	
070	2809846-0000		1	STOP PIN	
090	2832553-0000		1	FILLING PIPE	
120	2826390-0000		1	SPRING	
140	2572071-0000		1	HOOD	
170	24928-0000		4	LOCKING RUBBER	
185	499011-0000		2	SHAFT	
190	2715569-0000		1	BRACKET	
240	315204-0219		1	O-RING 29,2X3 MM	
250	2803986-0000		1	STOP PIN	
260	2803987-0000		1	STOP PIN	
270	2886173-0000		1	LOCKING RING	
TBA 1000B DIMC NOQC (See drawing on page: 1-244)					
010	232979-0000		1	PRESSURE ROLLER (PAK OF 10)	
020	2597531-0000		1	FLOAT	
	2878907-0000		*1*	*CUTTING ARM*	
030	1348048-0000		1	FORK	
040	2523268-0000		1	SHAFT	
050	2563294-0000		1	PRESSURE FLANGE	
060	2826464-0000		1	FILLING PIPE	
070	2809846-0000		1	STOP PIN	
090	2826478-0000		1	FILLING PIPE	
120	2826393-0000		1	SPRING	
140	14600-0000		1	HOOD	
240	315204-0219		1	O-RING 29,2X3 MM	
250	2803986-0000		1	STOP PIN	
260	2803987-0000		1	STOP PIN	
270	2886173-0000		1	LOCKING RING	
TBA 0200B QC, TBA 0330S QC, TBA 0250B QC (See drawing on page: 1-246)					
010	257330-0000		1	PRESSURE ROLLER (10 PCS)	
020	2826455-0000		1	FLOAT	
030	1317438-0000		1	FORK	
040	2529418-0000		1	SHAFT	
050	2601472-0000		1	PRESSURE FLANGE	
060	2826474-0000		1	FILLING PIPE	
070	2809845-0000		2	STOP PIN	
075	2563292-0000		1	STOP PIN	
090	2826479-0000		1	FILLING PIPE	
120	2826391-0000		1	SPRING	
140	295377-0003		1	HOOD	
150	1498143-0000		1	LOCK RING	
240	315204-0215		1	O-RING 19,2X3 MM	
TBA 0200M, TBA 0250S (See drawing on page: 1-246)					
010	272479-0000		1	PRESSURE ROLLER (10PCS)	
020	2826456-0000		1	FLOAT	
030	255978-0000		1	FORK	
040	2529416-0000		1	SHAFT	
050	2809850-0000		1	PRESSURE FLANGE	
060	2826471-0000		1	FILLING PIPE	
070	2809845-0000		2	STOP PIN	
075	2887700-0000		1	STOP PIN	
090	2826479-0000		1	FILLING PIPE	
120	2826392-0000		1	SPRING	
140	295377-0001		1	HOOD	
150	1499114-0000		1	LOCK RING	
240	315204-0215		1	O-RING 19,2X3 MM	
TBA 0200S (See drawing on page: 1-246)					
010	272479-0000		1	PRESSURE ROLLER (10PCS)	
020	2826456-0000		1	FLOAT	
030	255978-0000		1	FORK	
040	2529416-0000		1	SHAFT	
050	2809851-0000		1	PRESSURE FLANGE	
060	2826465-0000		1	FILLING PIPE	
070	2809845-0000		2	STOP PIN	
075	2887700-0000		1	STOP PIN	
090	2826479-0000		1	FILLING PIPE	
120	2826392-0000		1	SPRING	
140	295377-0001		1	HOOD	
150	1499114-0000		1	LOCK RING	
240	315204-0215		1	O-RING 19,2X3 MM	
TBA 0200SQ, TBA 0250SQ (See drawing on page: 1-246)					

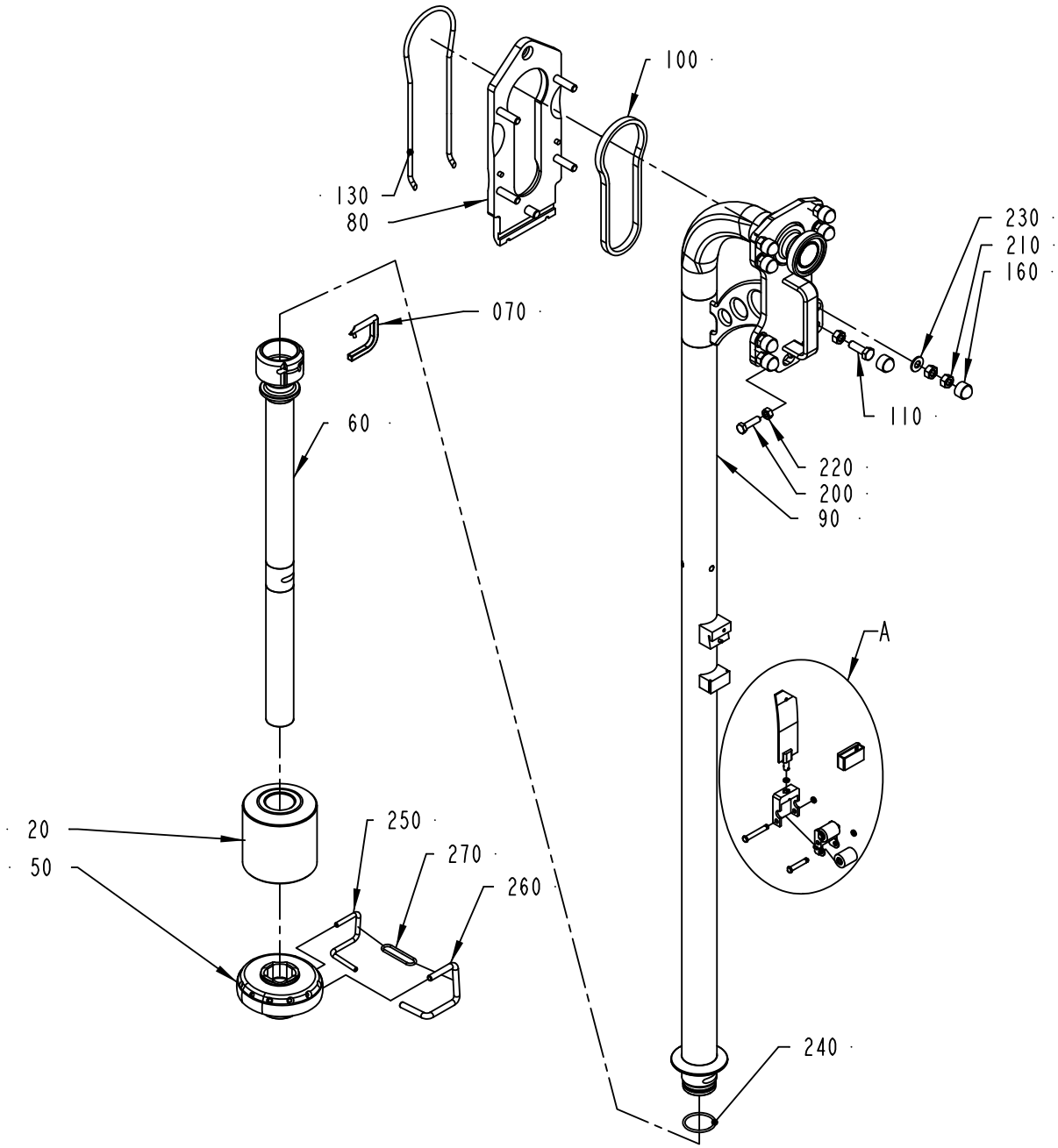

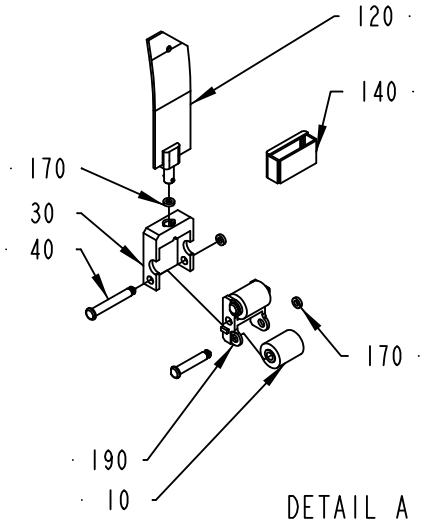

DETAIL A
SCALE 1:4

2501310-3
313276

ECM: 389753 - 20090404
Group number: 2501310-0100
Assembly Drawing: 2501310-3_1_AG

This list covers pages from 1-244 to 1-251

Pos	Part No	UN	Qty	Description	Page No
TBA 0200SQ, TBA 0250SQ (Cont'd) (See drawing on page: 1-246)					
010	2607089-0000		1	PRESSURE ROLLER	
020	2826455-0000		1	FLOAT	
030	1317438-0000		1	FORK	
040	2529418-0000		1	SHAFT	
050	2657902-0000		1	PRESSURE FLANGE	
060	2826473-0000		1	FILLING PIPE	
070	2809845-0000		2	STOP PIN	
075	2563292-0000		1	STOP PIN	
090	2826479-0000		1	FILLING PIPE	
120	2826391-0000		1	SPRING	
140	295377-0003		1	HOOD	
150	1498143-0000		1	LOCK RING	
240	315204-0215		1	O-RING 19,2X3 MM	
TBA 0500B NOQC, TBA 1000B NODIMC NOQC (See drawing on page: 1-248)					
010	232979-0000		2	PRESSURE ROLLER (PAK OF 10)	
020	2597531-0000		1	FLOAT	
	2878907-0000		*1*	*CUTTING ARM*	
030	2846311-0000		1	FORK	
040	1538953-0000		1	SHAFT	
050	2563294-0000		1	PRESSURE FLANGE	
060	2826464-0000		1	FILLING PIPE	
070	2809846-0000		1	STOP PIN	
090	2826478-0000		1	FILLING PIPE	
120	2826390-0000		1	SPRING	
140	2572071-0000		1	HOOD	
170	24928-0000		4	LOCKING RUBBER	
185	2638077-0000		2	SHAFT	
190	2846309-0000		1	BRACKET	
240	315204-0219		1	O-RING 29,2X3 MM	
250	2803986-0000		1	STOP PIN	
260	2803987-0000		1	STOP PIN	
270	2886173-0000		1	LOCKING RING	
TBA 0500B QC, TBA 1000B QC (See drawing on page: 1-248)					
010	232979-0000		2	PRESSURE ROLLER (PAK OF 10)	
020	2597531-0000		1	FLOAT	
	2878907-0000		*1*	*CUTTING ARM*	
030	2846311-0000		1	FORK	
040	1538953-0000		1	SHAFT	
050	2634524-0000		1	PRESSURE FLANGE	
060	2826472-0000		1	FILLING PIPE	
070	2809846-0000		1	STOP PIN	
090	2826478-0000		1	FILLING PIPE	
120	2826390-0000		1	SPRING	
140	2572071-0000		1	HOOD	
170	24928-0000		4	LOCKING RUBBER	
185	2638077-0000		2	SHAFT	
190	2846309-0000		1	BRACKET	
240	315204-0219		1	O-RING 29,2X3 MM	
250	2803986-0000		1	STOP PIN	
260	2803987-0000		1	STOP PIN	
270	2886173-0000		1	LOCKING RING	
TBA 0500S (See drawing on page: 1-244)					
010	257330-0000		1	PRESSURE ROLLER (10 PCS)	
020	2826453-0000		1	FLOAT	
030	2673016-0000		1	FORK	
040	2673022-0000		1	SHAFT	
050	2601468-0000		1	PRESSURE FLANGE	
060	2866755-0000		1	FILLING PIPE	
070	2809846-0000		1	STOP PIN	
090	2832555-0000		1	FILLING PIPE	
120	2826393-0000		1	SPRING	
140	14600-0000		1	HOOD	
240	315204-0219		1	O-RING 29,2X3 MM	
250	2803986-0000		1	STOP PIN	
260	2803987-0000		1	STOP PIN	
270	2886173-0000		1	LOCKING RING	
TBA 0500SQ, TBA 1000SQ (See drawing on page: 1-244)					
010	257330-0000		1	PRESSURE ROLLER (10 PCS)	
020	2826452-0000		1	FLOAT	
030	1348049-0000		1	FORK	
040	2529420-0000		1	SHAFT	
050	2601469-0000		1	PRESSURE FLANGE	
060	2826463-0000		1	FILLING PIPE	
070	2809846-0000		1	STOP PIN	
090	2826478-0000		1	FILLING PIPE	
120	2826395-0000		1	SPRING	
140	434665-0000		1	HOOD	
240	315204-0219		1	O-RING 29,2X3 MM	
250	2803986-0000		1	STOP PIN	
260	2803987-0000		1	STOP PIN	
270	2886173-0000		1	LOCKING RING	
TBA 1000S (See drawing on page: 1-244)					
010	499387-0000		1	PRESSURE ROLLER - (10 PCS)	

Machine Type | Group Description | Used-In | Group Number | Page No

FILLING PIPE

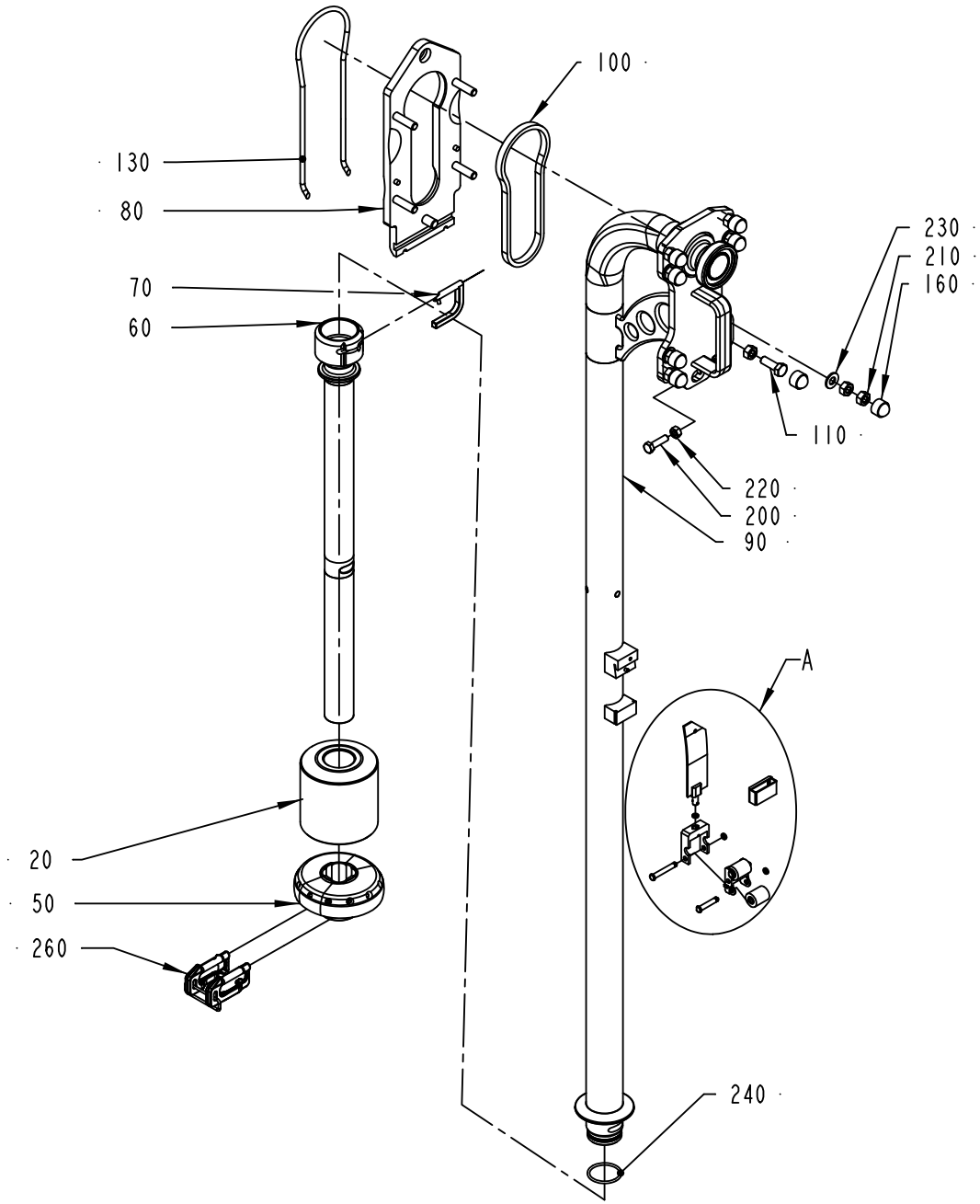

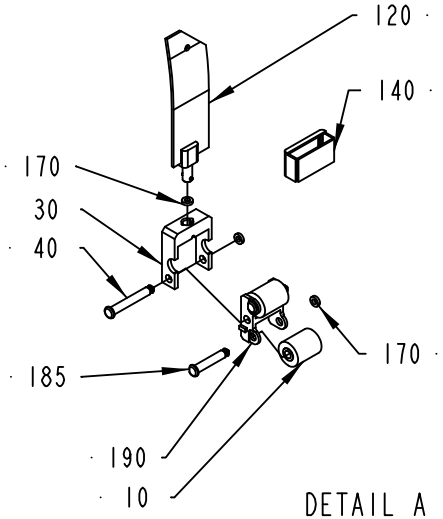

DETAIL A
SCALE 1:4

2501310-11
376139

ECM: 389753 - 20090404
Group number: 2501310-0100
Assembly Drawing: 2501310-11_1_AA

This list covers pages from 1-244 to 1-251

Pos	Part No	UN	Qty	Description	Page No
TBA 1000S (Cont'd) (See drawing on page: 1-244)					
020	2597531-0000		1	FLOAT	
	2878907-0000		*1*	*CUTTING ARM*	
030	1348047-0000		1	FORK	
040	2529419-0000		1	SHAFT	
050	2826458-0000		1	PRESSURE FLANGE	
060	2826463-0000		1	FILLING PIPE	
070	2809846-0000		1	STOP PIN	
090	2826478-0000		1	FILLING PIPE	
120	2826395-0000		1	SPRING	
140	434665-0000		1	HOOD	
240	315204-0219		1	O-RING 29,2X3 MM	
250	2803986-0000		1	STOP PIN	
260	2803987-0000		1	STOP PIN	
270	2886173-0000		1	LOCKING RING	
Common Parts					
080	2500082-0000		1	MOUNTING PLATE	
100	2507048-0000		1	GASKET	
110	312105-0495		4	SCREW M6S ISO 4017 M10X30 A480	
130	2500071-0000		1	O-RING	
160	90459-0729		8	HEXAGONAL PROTECTIVE CAP GPN 1000	
200	312105-0455		2	SCREW M6S ISO 4017 M8X30 A480	
210	312605-0320		12	HEXAGON NUT, M6M M10 A280	
220	312605-0318		2	HEXAGON NUT, M6M M8 A280	
230	315105-0173		4	WASHER BRB 10,5X22 RFR	

Pos	Part No	UN	Qty	Description	Page No

HEAD SPACE BY INJECTION

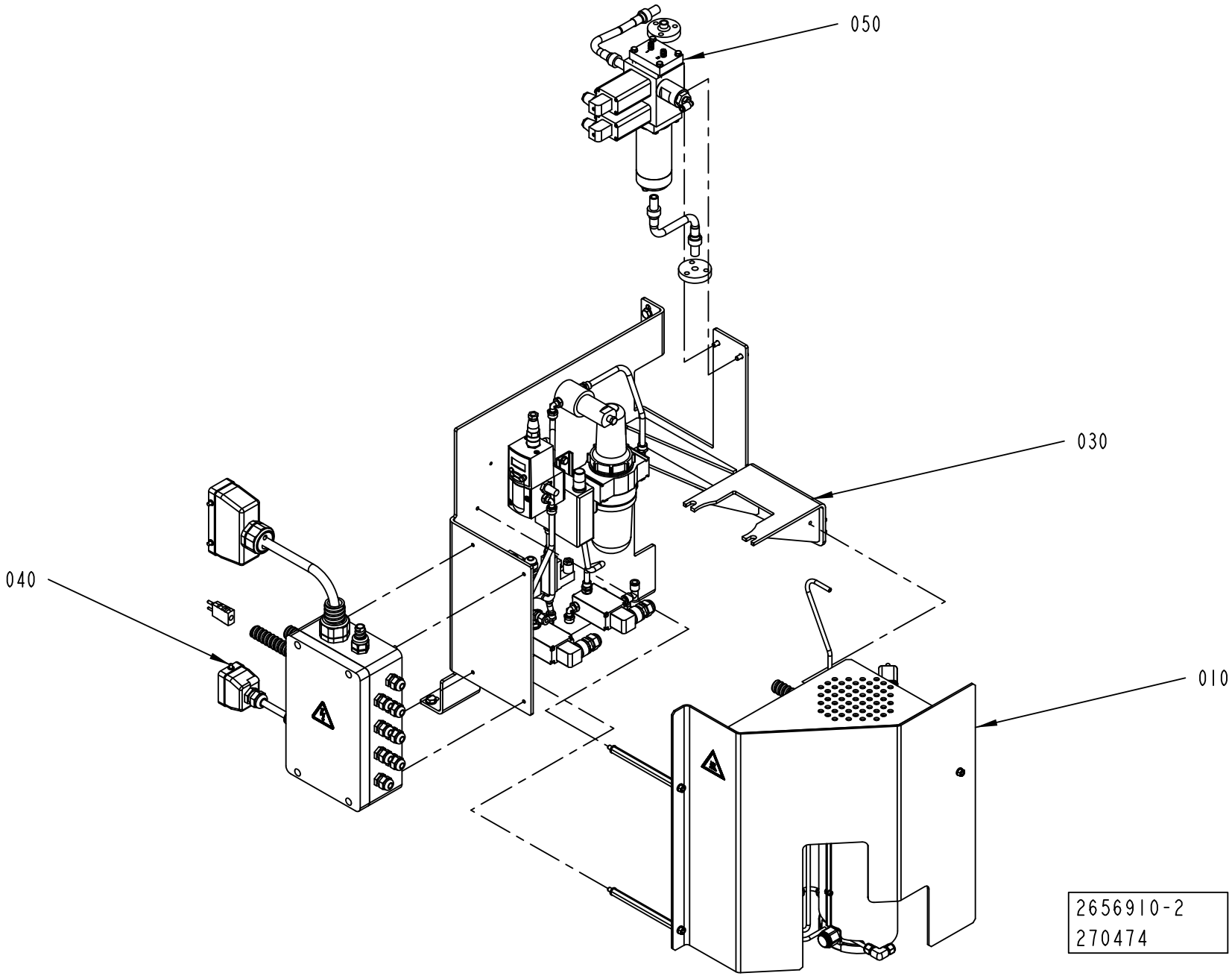

ECM: 270474 - 20061101
Group number: 2656910-0200
Assembly Drawing: 2656910-2_1_AA

Pos	Part No	UN	Qty	Description	Page No
-					
010	2696118-0100		1	HEATER	**1-255**
030	2696120-0100		1	PNEUMATIC PANEL	**1-257**
040	2564106-0100		1	CONNECTION BOX	**1-259**
050	2539458-0100		1	SPRAY TANK	**1-263**

Pos	Part No	UN	Qty	Description	Page No

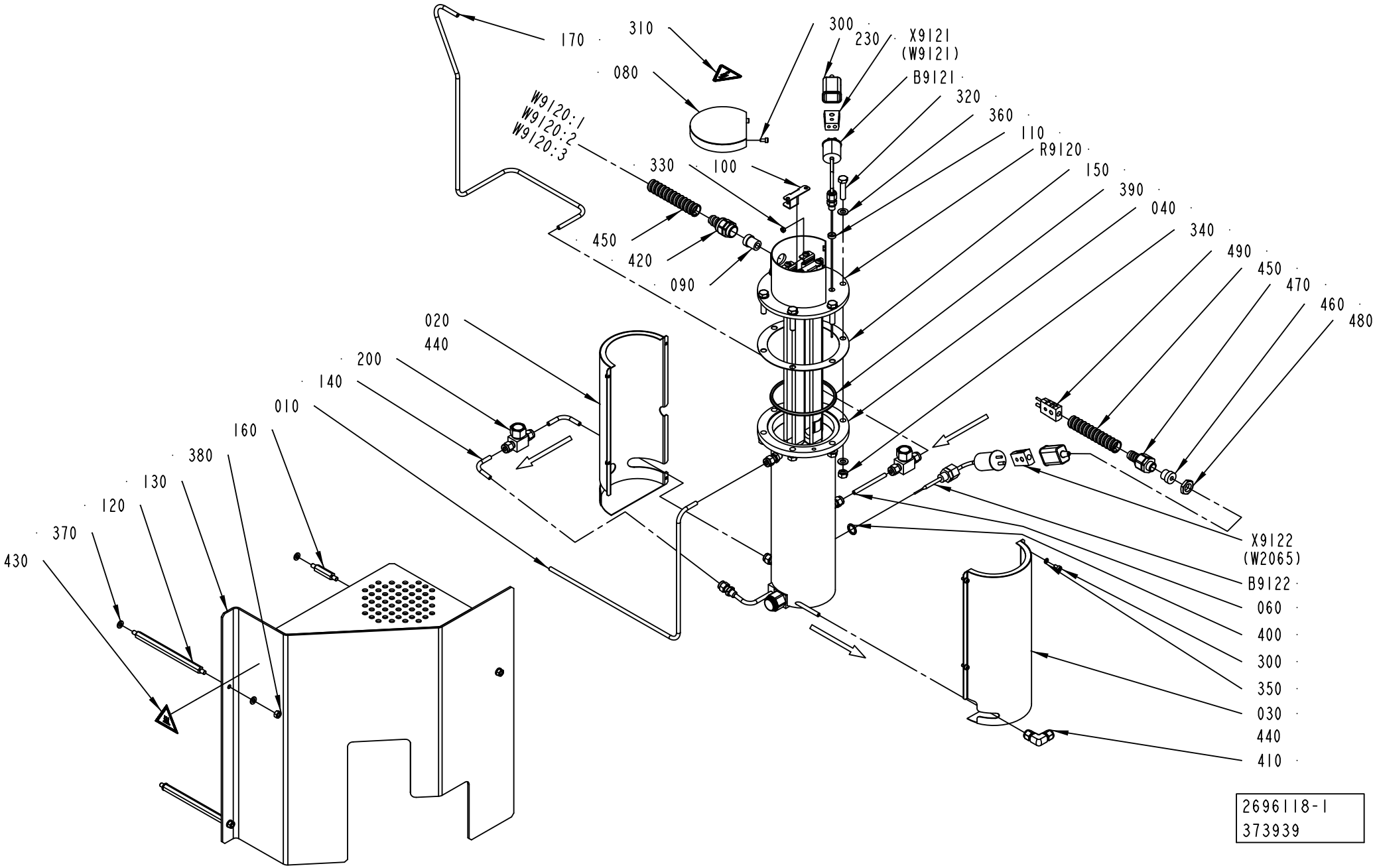
170
310
080
W9120:1
W9120:2
W9120:3
330
100
450
420
090
300
230
X9121
(W9121)
B9121
320
360
110
R9120
150
390
040
340
490
450
470
460
480
020
440
200
140
010
160
380
130
120
370
430
X9122
(W2065)
B9122
060
400
300
350
030
440
410
2696118-1
373939

ECM: 378421 - 20090401
Group number: 2696118-0100
Assembly Drawing: 2696118-1_1_AC

Pos	Part No	UN	Qty	Description	Page No
-					
010	2696119-0000		1	PIPE	
020	2685340-0000		1	COVER	
030	2685341-0000		1	COVER	
040	2685314-0000		1	COIL	
U70V4242	*90277-0407*		*1*	*FILTER ELEMENT 60µ, SS-4F-K4-60*	
060	2562307-0000		1	PIPE	
080	2562315-0000		1	PLUG	
090	90600-0976		1	INSERT, SINGLE HOLE, HI.TEMP, EK153I9	
100	2598084-0000		2	PLATE	
110	2598085-0000		1	SPACER	
120	2672975-0000		2	SPACER	
130	2709219-0000		1	COVER	
140	2736707-0000		2	PIPE	
150	2685339-0000		1	GASKET	
160	2709220-0000		1	SPACER	
170	2685346-0000		1	PIPE	
200	90230-0064		2	CHECK VALVE, 6 MM HIGH TEMP.	
230	90326-0012		2	PROTECTIVE COVER, T31A4618	
300	312115-0287		6	SCREW ISO4762 M4X8 A4 80	
310	90600-1738		1	WARNING SIGN ISO, ELECTRIC SHOCK	
320	312109-0457		6	SCREW M6S ISO 4017 M8X35 A480	
330	312605-0312		1	HEXAGON NUT, M6M M4 A280	
340	312605-0318		6	HEXAGON NUT, M6M M8 A280	
350	315105-0136		4	WASHER BRB 4,3X8 RFR	
360	315105-0165		12	WASHER BRB 8,4X16 RFR	
370	315105-0153		6	WASHER BRB 6,4X12 RFR	
380	312605-0316		3	HEXAGON NUT, M6M M6 A280	
390	315229-0208		1	GASKET 97,4X105,4X3,7 MM 4"	
400	315234-0110		1	WASHER,PL.RND.CU.13,5/18 H=1,5	
410	90459-4511		1	CONN. ELBOW, 6	
420	90600-0975		1	HOSE GLAND W/O INSERT PG13,5 EXTENDED	
430	359705-0007		1	WARNING SIGN ISO, HOT SURFACE	
440	90411-0001	M	1	INSULATING MAT	
450	90152-0050	MM	2000	SPIRAL CONDUIT, 20X13, UL 1313	
460	353249-0008		1	INSERT, SINGLE HOLE, EK 152/7	
470	353243-0001		1	HOSE GLAND W/O INSERT PG9 EXTENDED	
480	90099-0104		1	NUT, PR 15,2 (PG9)	
490	90326-0022		1	PLUG, MALE YELLOW CR-AL	
B9121	90459-2122		1	THERMOCOUPLE, EN-5130060-0001	
B9122	90326-0053		1	THERMOCOUPLE, 12826-35	
R9120	2685342-0000		1	HEATING ELEMENT	
W9120:1	90459-3165	M	1	CABLE OLFLON PTFE 1X4,72 MM² BLACK	
W9120:2	90459-3165	M	1	CABLE OLFLON PTFE 1X4,72 MM² BLACK	
W9120:3	90459-3154	M	1	CABLE OLFLONPTFE 1X4,72 MM² YELLOW-GREEN	
X9121	90326-0020		1	PLUG, FEMALE YELLOW CR-AL	
X9122	90326-0020		1	PLUG, FEMALE YELLOW CR-AL	

Machine Type | Group Description | Used-In | Group Number | Page No

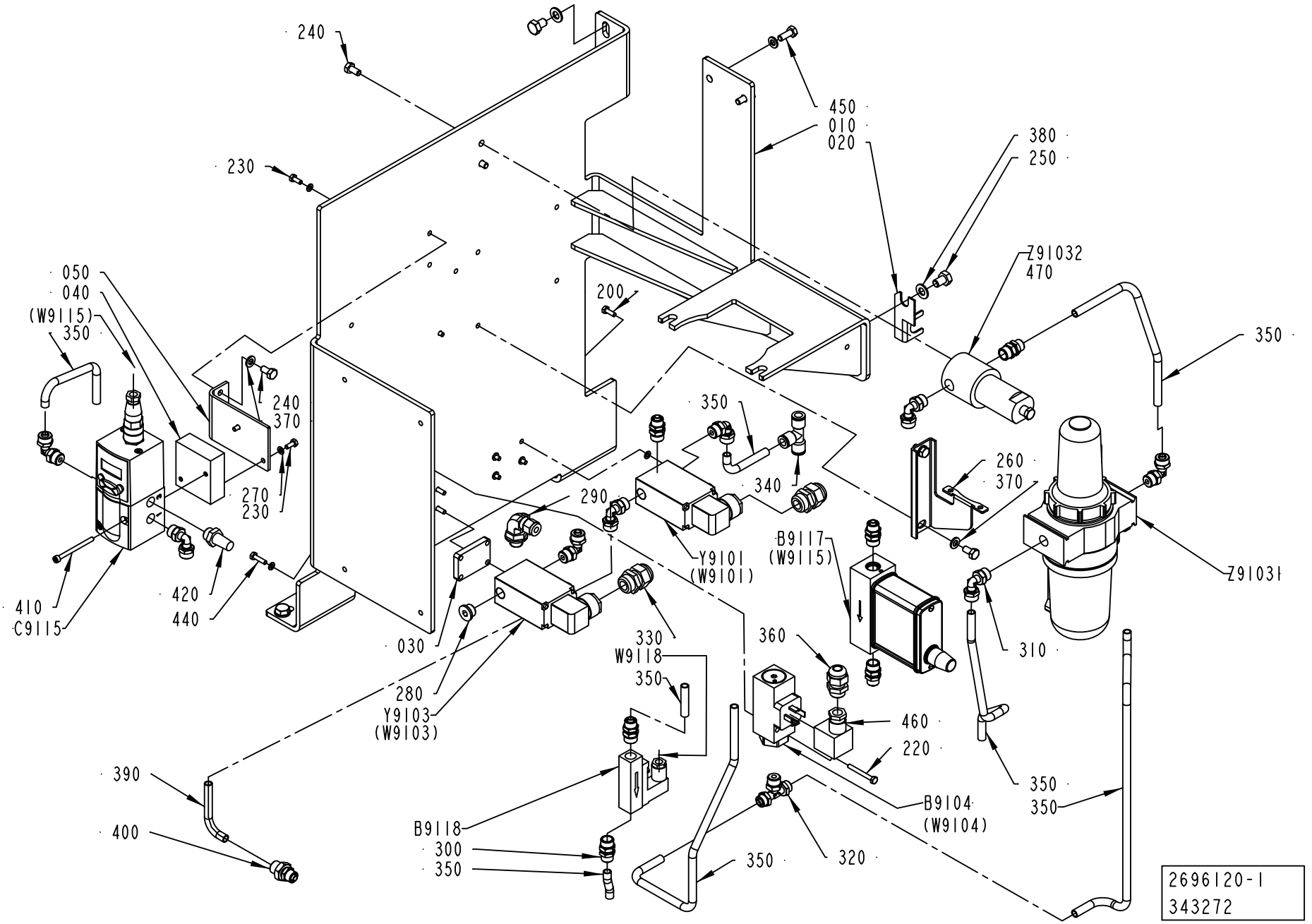
240
230
450
010
020
380
250
Z91032
470
200
050
040
(W9115)
350
240
370
270
230
410
C9115
420
440
030
290
350
340
Y9101
(W9101)
B9117
(W9115)
260
370
Z91031
350
330
W9118
350
280
Y9103
(W9103)
360
310
460
220
350
350
B9104
(W9104)
390
400
B9118
300
350
350
320
2696120-1
343272

ECM: 347923 - 20080701
Group number: 2696120-0100
Assembly Drawing: 2696120-1_1_AC

Pos	Part No	UN	Qty	Description	Page No
-					
010	2763948-0000		1	BRACKET	
020	1036610-0000		1	BRACKET	
030	2777968-0000		1	SPACER	
040	2511330-0000		1	SPACER	
050	2564606-0000		1	SUPPORT PLATE	
200	312105-0291		4	SCREW M6S ISO 4017 M4X12 A470	
220	312105-0301		2	SCREW M6S ISO 4017 M4X35 A470	
230	312105-0289		4	SCREW M6S H4X10 A4 70 ISO4017/DIN933	
240	312105-0366		8	SCREW M6S ISO 4017 M6X12 A480	
250	312105-0447		7	SCREW M6S ISO 4017 M8X12 A480	
260	90236-0041		1	BRACKET, 74504-50	
270	315105-0136		16	WASHER BRB 4,3X8 RFR	
280	342713-0210		1	PLUG, EXT THREAD HEX SOCKET	
290	90600-0731		1	ADJUSTABLE ELBOW CONNECTION,EXT 6-G1/4	
300	342921-0122		6	STRAIGHT COUPLING,EXT.THREADED 8/6-G1/4"	
310	342931-0122		8	ELBOW 90 COUPL.,EXT.THREAD 8/6-G1/4"	
320	342941-0122		1	T-COUPLING,EXT.THREAD 8/6-G1/4"	
330	352103-0106		2	CABLE GLAND, ST 11, PR18,6/PG11	
340	342748-0103		1	T-CONNECTION 8MM	
350	90166-0013	MM	2000	TUBE 8 MM PA BLUE	
360	352103-0101		1	CABLE GLAND, ST 9, PR15,2/PG9	
370	315105-0153		8	WASHER BRB 6,4X12 RFR	
380	315105-0165		7	WASHER BRB 8,4X16 RFR	
390	90166-0013	MM	5000	TUBE 8 MM PA BLUE	
400	342921-0122		1	STRAIGHT COUPLING,EXT.THREADED 8/6-G1/4"	
410	312115-0305		2	SCREW ISO4762 M4X50 A4 80	
420	346800-0110		1	SILENCER FILTER R1/4"	
440	312105-0293		4	SCREW M6S ISO 4017 M4X16 A470	
450	312105-0368		2	SCREW M6S ISO 4017 M6X16 A480	
460	90110-0095		1	CONNECTOR 3 POLE + EARTH	
470	90277-0324		1	FILTER CARTRIDGE 050-11-A	
B9104	90458-2241		1	PRESSURE SWITCH 0,5-10 BAR ADJUSTABLE	
B9117	90600-1154		1	FLOW METER,D-6230-HGB-BB-AV-99-0-N2/IP65	
B9118	90459-6215		1	FLOW SWITCH BFS-10-N-G1/4-MS-NO-ST	
C9115	90459-1420		1	PROPORTIONAL VALVE 0 - 10V/0-6 BAR	
	90458-1262		*1*	*CONNECTOR 131028001 FOR PROP. VALVE*	
Y9101	90042-0171		1	SOLENOID VALVE BURKERT	
	90042-0466		*1*	*DIAPHRAGM 330.95.2 VITON*	
Y9103	90042-0171		1	SOLENOID VALVE BURKERT	
	90042-0466		*1*	*DIAPHRAGM 330.95.2 VITON*	
Z91031	90277-0104		1	FILTER F64B-2GN-ARO	
	90113-0458		*1*	*FILTER ELEMENTS, 5350-99*	
	90113-0457		*1*	*FILTER ELEMENTS*	
Z91032	90277-0323		1	FILTER HOUSING / ART.NO 95S6-1/4 S 5430	

Machine Type	Group Description	Used-In	Group Number	Page No

CONNECTION BOX

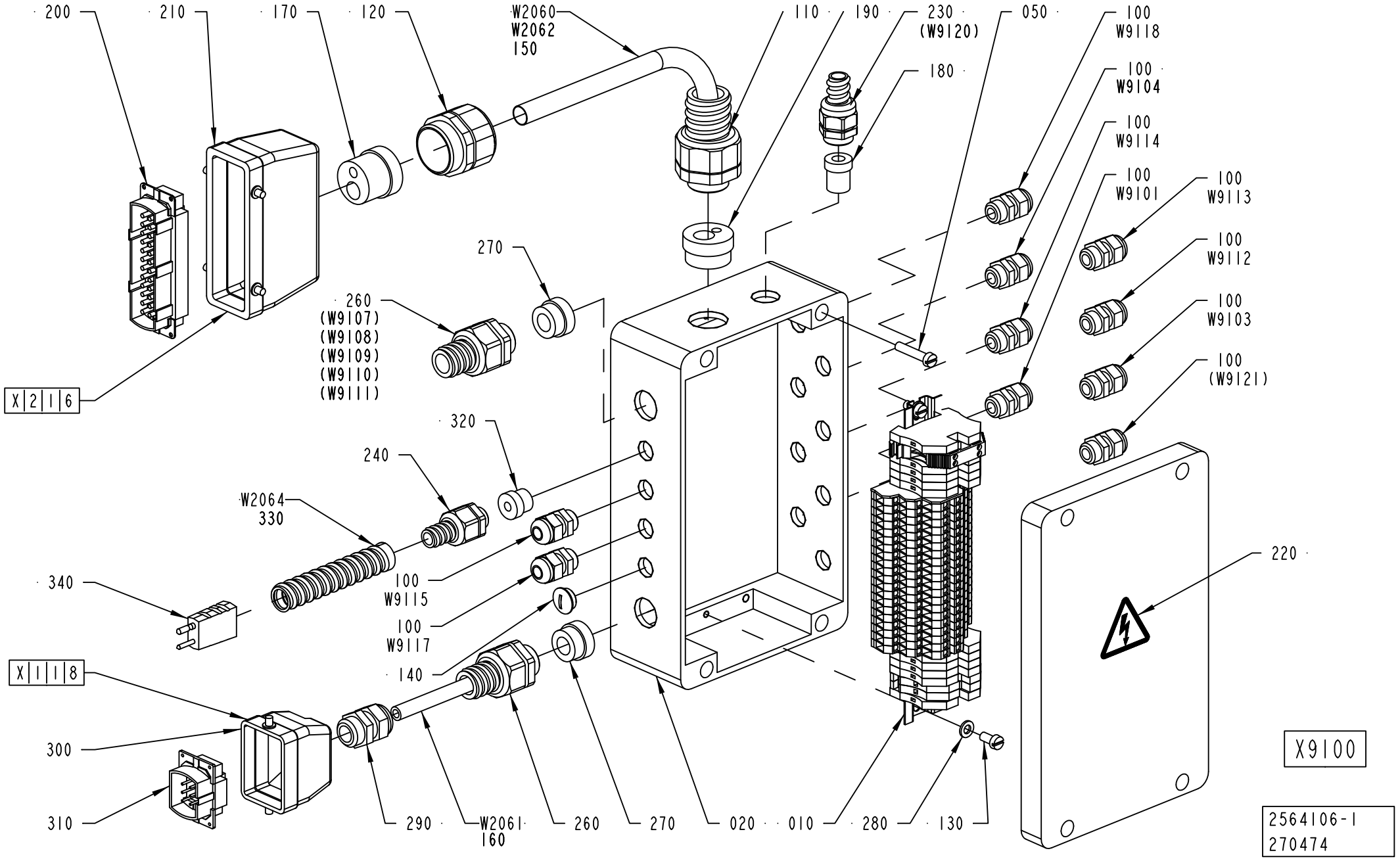

ECM: 277442 - 20070402
Group number: 2564106-0100
Assembly Drawing: 2564106-1_1_AC

Pos	Part No	UN	Qty	Description	Page No
-					
010	2565432-0100		1	TERMINAL BLOCK	**1-261**
020	2564105-0000		1	CONNECTION BOX	
050	312125-0374		4	SCREW ISO 1207 M6X30 A4	
100	352103-0101		10	CABLE GLAND, ST 9, PR15,2/PG9	
110	353243-0007		1	HOSE GLAND W/O INSERT PG21 EXTENDED	
120	353240-0006		1	GLAND W/O INSERT PG29 NORMAL	
130	312125-0366		2	SCREW ISO 1207 M6X12 A4	
140	90002-0013		1	BLANK-OFF PLUG, PR 15,2 SKINDICHT-BLK9	
150	90152-0070	MM	1500	METAL HOSE, 32,5X26, UL 2621	
160	90152-0051	MM	1850	SPIRAL CONDUIT, 25X18, UL 1816	
170	1347880-0000		1	INSERT	
180	90600-0976		1	INSERT, SINGLE HOLE, HI.TEMP, EK153I9	
190	2649167-0000		1	INSERT	
200	90110-0150		1	MALE INSERT 121110 0000	
210	90110-0152		1	CABLE HOOD 24-POL 70.352.2428.1	
220	359705-0015		1	WARNING SIGN ISO, RISK OF ELECTRIC SHOCK	
230	90600-0975		1	HOSE GLAND W/O INSERT PG13,5 EXTENDED	
240	353243-0001		1	HOSE GLAND W/O INSERT PG9 EXTENDED	
260	353243-0005		2	HOSE GLAND W/O INSERT PG16 EXTENDED	
270	353249-0013		2	INSERT, SINGLE HOLE, EK 154/13	
280	315105-0153		2	WASHER BRB 6,4X12 RFR	
290	352103-0108		1	CABLE GLAND, ST 13,5 , PR20,4/PG13,5	
300	90110-0157		1	CABLE HOOD 6-POL 70.352.0628.1	
310	90110-0159		1	MALE INSERT 70.310.0640.0	
320	353249-0008		1	INSERT, SINGLE HOLE, EK 152/7	
330	90152-0050	MM	1700	SPIRAL CONDUIT, 20X13, UL 1313	
340	90326-0022		1	PLUG, MALE YELLOW CR-AL	
W2060	90220-0201	MM	5500	CABLE OLFLEX 18X0,75 MM2	
W2061	351150-0417	MM	5600	CABLE OLFLEX 3X2,5 MM2 LIGHT/GREY	
W2062	90220-0165	MM	5600	SCR. CABLE 5X0,34MM2	
W2064	90220-0034	MM	7000	THERMOCABLE TEX/SITW-20F-KX 2X0,5MM2	
W9101	351150-0403	MM	1400	CABLE OLFLEX 3X0,75 MM2 LIGHT/GREY	
W9103	351150-0403	MM	1100	CABLE OLFLEX 3X0,75 MM2 LIGHT/GREY	
W9104	351150-0403	MM	1100	CABLE OLFLEX 3X0,75 MM2 LIGHT/GREY	
W9112	351150-0403	MM	800	CABLE OLFLEX 3X0,75 MM2 LIGHT/GREY	
W9113	351150-0404	MM	1000	CABLE OLFLEX 4X0,75 MM2 LIGHT/GREY	
W9114	351150-0403	MM	900	CABLE OLFLEX 3X0,75 MM2 LIGHT/GREY	
W9115	90220-0165	MM	1300	SCR. CABLE 5X0,34MM2	
W9117	90220-0165	MM	1400	SCR. CABLE 5X0,34MM2	
W9118	351150-0403	MM	500	CABLE OLFLEX 3X0,75 MM2 LIGHT/GREY	

Machine Type	Group Description	Used-In	Group Number	Page No

TERMINAL BLOCK

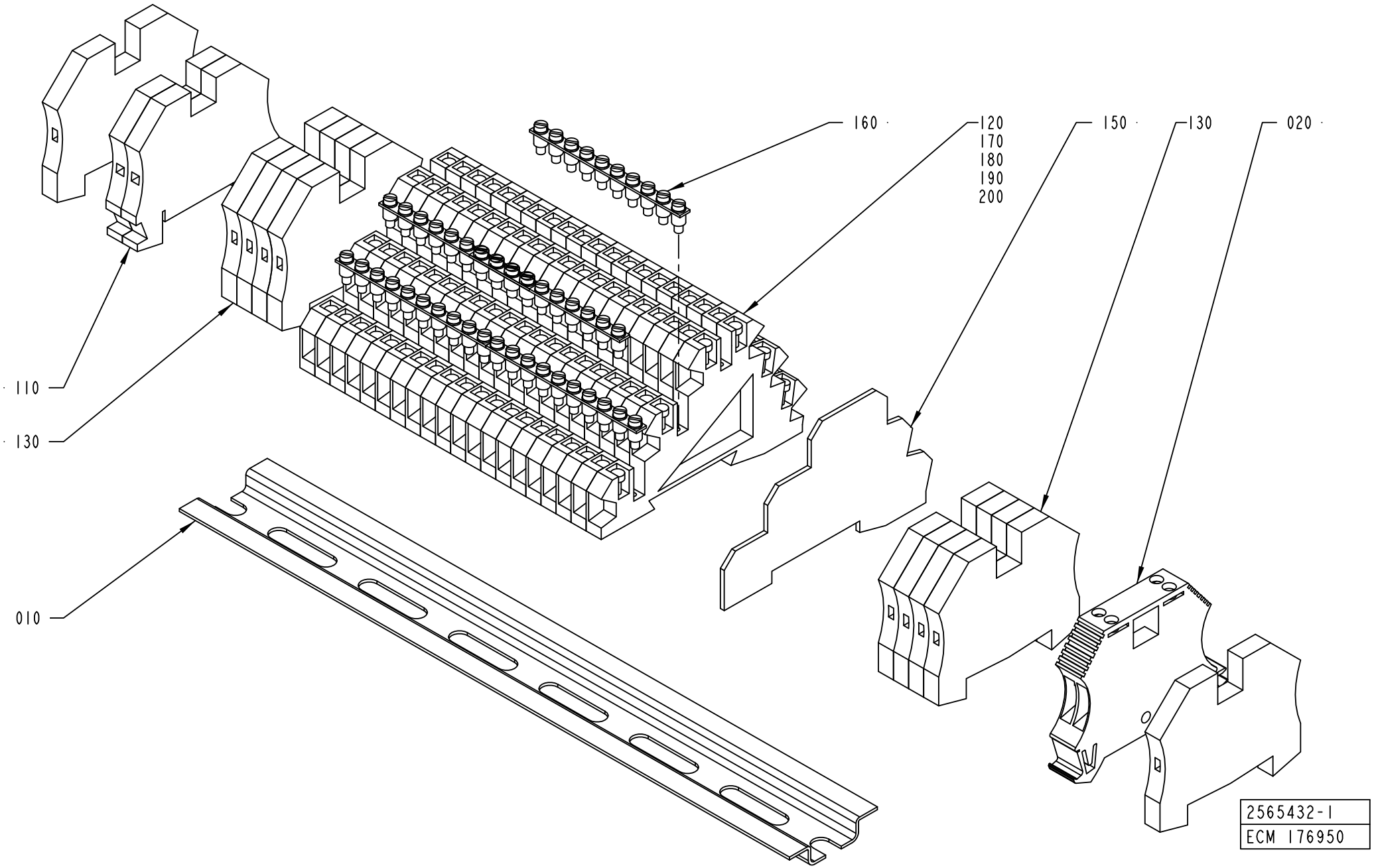

ECM: 344006 - 20080402
Group number: 2565432-0100
Assembly Drawing: 2565432-1_1_AB

Pos	Part No	UN	Qty	Description	Page No
-					
010	1532237-0000		1	RAIL	
020	90459-1742		1	FEED THROUGH TERMINAL, 1024100	
110	353021-0213		2	FEED THROUGH TERMINAL, 10201.0	
120	353021-0302		20	TERMINALS,TRIPLE-LEVEL, DLD 2,5/35 PA	
130	353024-0205		10	EARTH TERMINAL, 1010.1	
150	353032-0302		1	END PLATE, AP DLD2,5 DB	
160	353034-0404		5	BRIDGE CONNECTOR Q10, 13131.0	
170	359011-0823		1	SET OF SIGNS 6-FW 101-150	
180	359011-0834		1	SET OF SIGNS 6-GW(EARTH)	
190	359011-0832		1	SET OF SIGNS 6-GW (+)	
200	359011-0833		1	SET OF SIGNS 6-GW (-)	

Pos	Part No	UN	Qty	Description	Page No

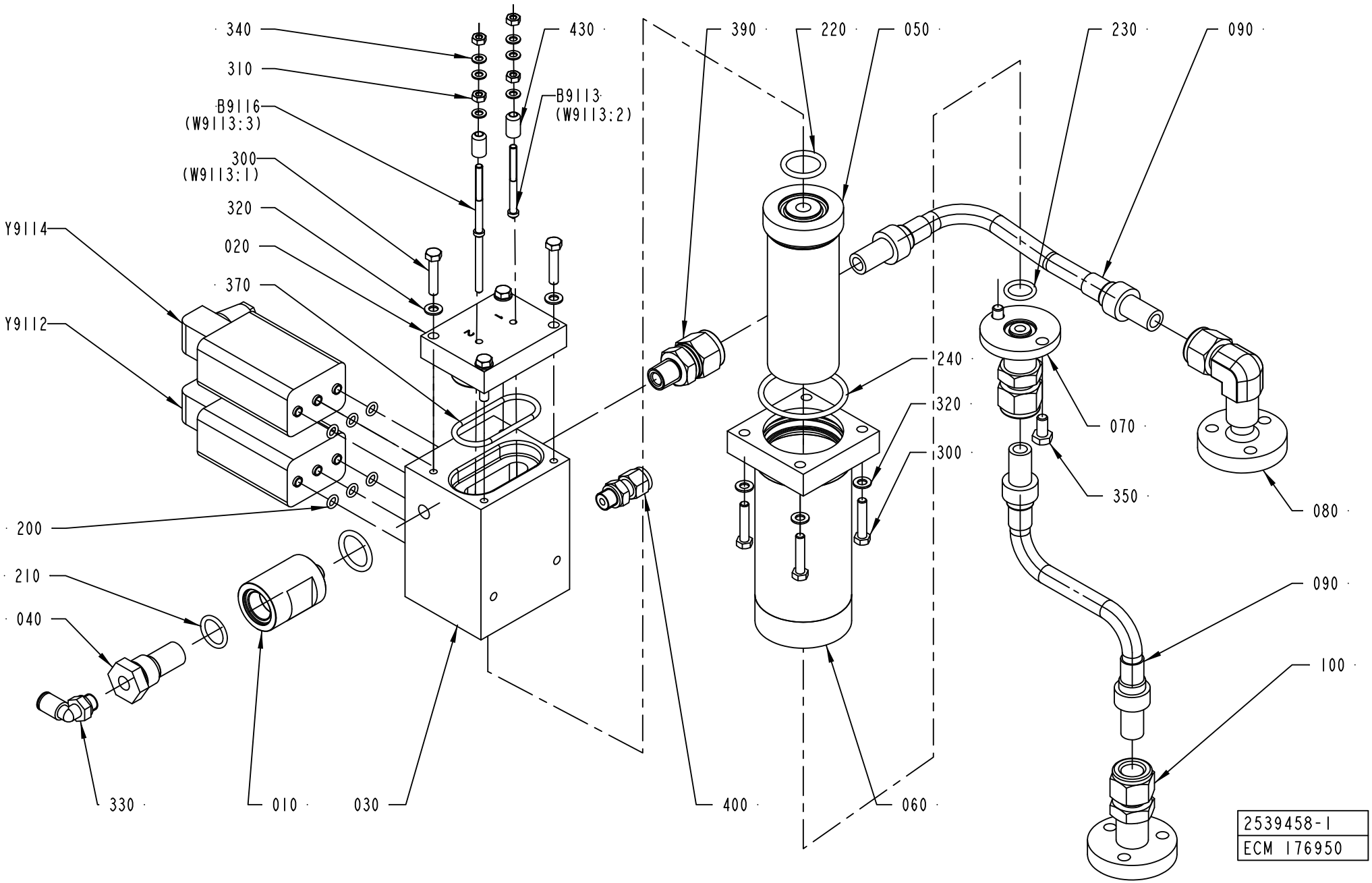
340
310
B9116
(W9113:3)
300
(W9113:1)
320
020
370
Y9114
Y9112
200
210
040
330
010
030
430
B9113
(W9113:2)
390
220
050
230
090
240
320
300
070
350
080
090
100
400
060
2539458-1
ECM 176950

ECM: 387761 - 20090402
Group number: 2539458-0100
Assembly Drawing: 2539458-1_1_AC

Pos	Part No	UN	Qty	Description	Page No
-					
010	1519486-0000		1	FILTER HOUSING	
020	2553167-0000		1	LID	
030	2512939-0000		1	DISTRIBUTOR BLOCK	
040	450833-0000		1	FILTER	
050	554141-0000		1	FILTER	
060	554142-0000		1	FILTER HOUSING	
070	2657865-0000		1	PIPE CONNECTION	
080	2657863-0000		1	PIPE CONNECTION	
090	90459-4151		2	HOSE ASSEMBLY 12,7 X 304,8 MM	
100	2657864-0000		1	PIPE CONNECTION	
200	927420-0001		6	O-RING 5.1X1.6 SILICONE	
210	927421-0004		1	O-RING 15.3X2.4 SILICONE	
220	927422-0001		2	O-RING 19.2X3 SILICONE	
230	927421-0003		1	O-RING 13.3X2.4 SILICONE	
240	927422-0007		1	O-RING 44.2X3 SILICONE	
300	312105-0333		8	SCREW M6S ISO 4017 M5X25 A480	
310	312605-0312		4	HEXAGON NUT, M6M M4 A280	
320	315105-0146		8	WASHER BRB 5,3X10 RFR	
330	350002-0006		1	PUSH-IN L-FITTING QSL-F-G1/8-6	
340	315105-0136		6	WASHER BRB 4,3X8 RFR	
350	312105-0366		2	SCREW M6S ISO 4017 M6X12 A480	
370	927422-0006		1	O-RING 42.2X3 SILICONE	
390	90459-4148		1	CONN. STR., 1/2"-1/4 ISO 7/1, EXT. THREA	
400	90459-1424		1	CONN. STR., 6-G1/8, EXT. THREAD	
430	2672974-0000		2	BUSHING	
B9113	2672972-0000		1	BOLT	
B9116	2672973-0000		1	ELECTRODE	
Y9112	90042-0203		1	SOLENOID VALVE BüRKERT	
Y9114	90042-0203		1	SOLENOID VALVE BüRKERT	

Pos	Part No	UN	Qty	Description	Page No

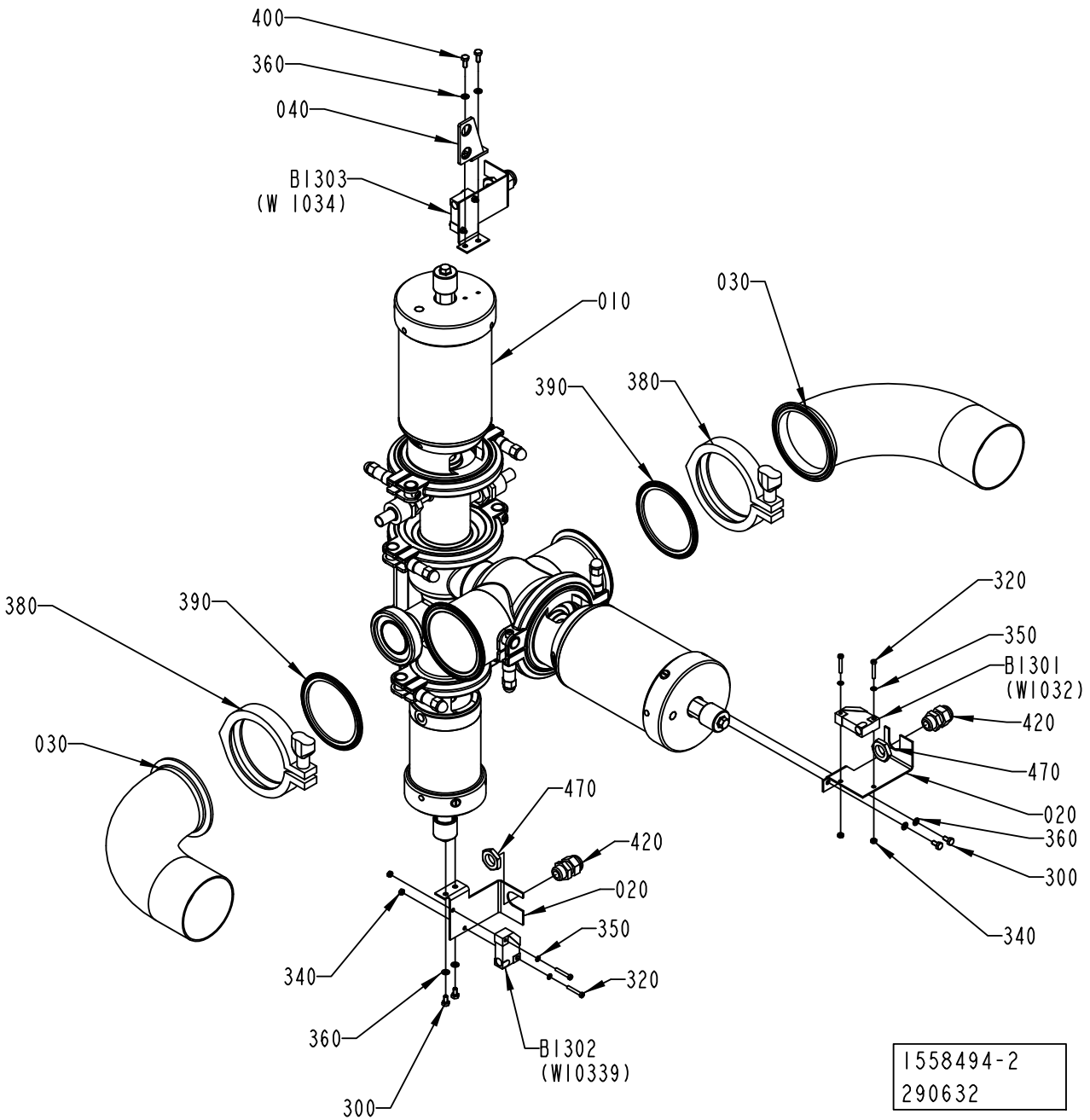
400
360
040
B1303
(W 1034)
010
030
390
380
320
350
B1301
(W1032)
420
470
020
360
300
340
380
390
030
470
420
020
350
320
340
360
300
B1302
(W10339)
1558494-2
290632

ECM: 301750 - 20070402
Group number: 1558494-0200
Assembly Drawing: 1558494-2_1_AD

Pos	Part No	UN	Qty	Description	Page No
2"					
030	2833039-0000		2	PIPE	
380	342840-0105		2	CLAMPING PIECE, GH13LAH2304NO79612011202	
390	342850-0305		2	GASKET 47,8X62,6X5,2 MM 2" FDA 3-A	
3"					
030	2826436-0000		2	PIPE	
380	342840-0107		2	CLAMP 3"	
390	342850-0307		2	GASKET 72,9X89,6X5,2 MM 3" FDA 3-A	
Common Parts					
010	2547410-0100		1	PRODUCT VALVE	**1-267**
020	1037093-0000		3	SENSOR BRACKET	
040	2559095-0000		1	BRACKET	
300	312105-0287		4	SCREW M6S ISO 4017 M4X8 A470	
320	312125-0230		6	SCREW ISO 1207 M3X20 A4	
340	312605-0310		6	HEXAGON NUT, M6M M3 A280	
350	315105-0124		6	WASHER BRB 3,2X6 RFR	
360	315105-0136		6	WASHER BRB 4,3X8 RFR	
400	312105-0289		2	SCREW M6S H4X10 A4 70 ISO4017/DIN933	
420	352103-0101		3	CABLE GLAND, ST 9, PR15,2/PG9	
470	90099-0104		3	NUT, PR 15,2 (PG9)	
B1301	90044-0194		1	INDUCTIVE SENSOR IN5329	
B1302	90044-0194		1	INDUCTIVE SENSOR IN5329	
B1303	90044-0194		1	INDUCTIVE SENSOR IN5329	

Pos	Part No	UN	Qty	Description	Page No

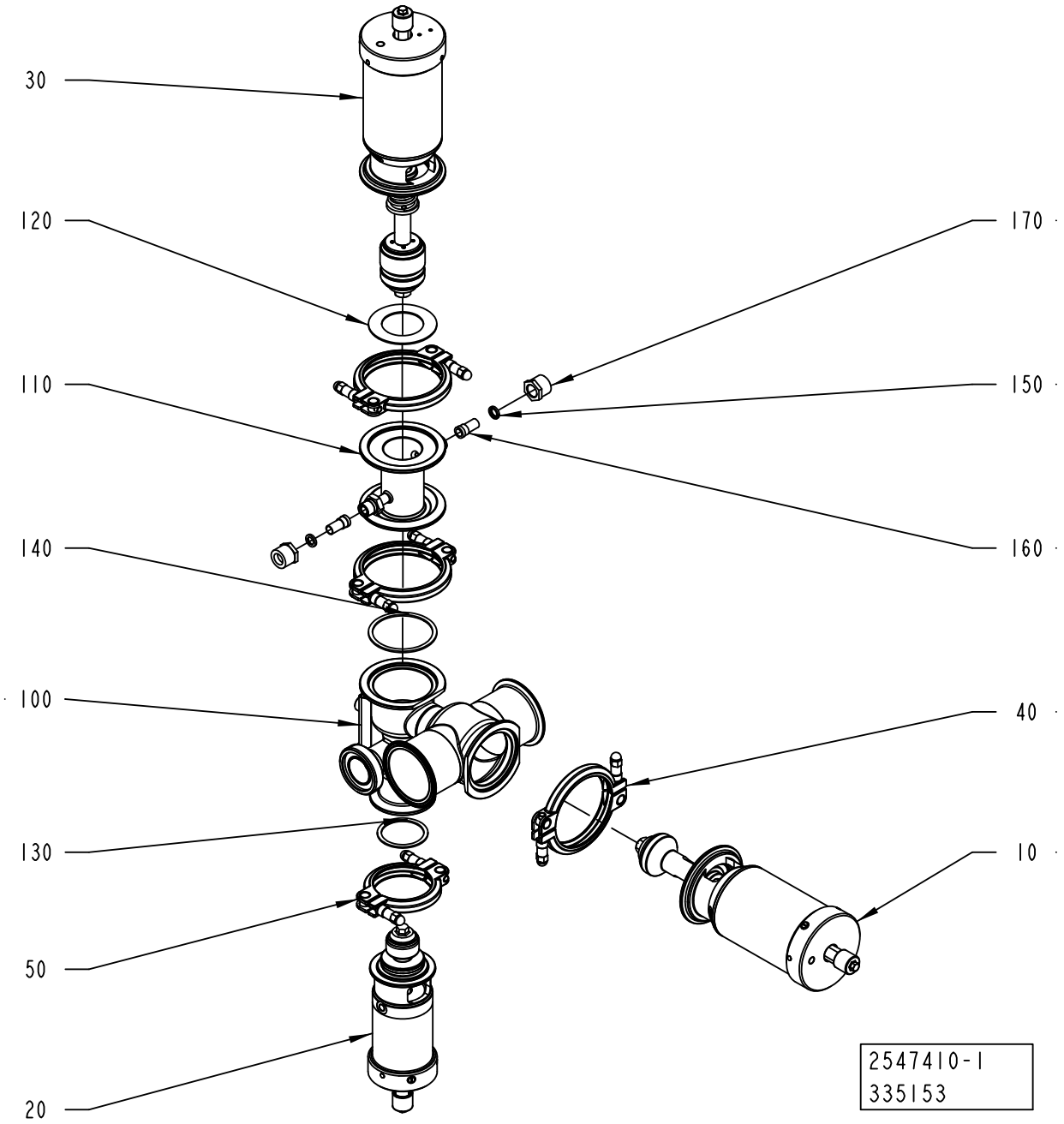
30
120
110
140
100
130
50
20
170
150
160
40
10
2547410-1
335153

ECM: 387759 - 20090402
Group number: 2547410-0100
Assembly Drawing: 2547410-1_1_AC

Pos	Part No	UN	Qty	Description	Page No
2"					
100	2833038-0000		1	BODY	
3"					
100	2826438-0000		1	BODY	
Common Parts					
010	576436-0100		1	A-CYLINDER	**1-269**
020	576438-0100		1	B-CYLINDER	**1-271**
030	576437-0100		1	C-CYLINDER	**1-273**
040	541163-0200		3	CLAMP RING	**1-275**
050	541164-0200		1	CLAMP RING	**1-277**
110	567018-0000		1	STEAM HOUSE	
120	539212-0000		1	GASKET	
130	90207-0365		1	GASKET 53X63X1,8 MM 2,5" FDA 3-A	
140	90207-0363		1	GASKET 75X85X1,8 MM 3" FDA 3-A	
150	90091-0266		2	SEAL RING 10,4X16,3X2,5 MM	
160	90030-0336		2	CONN. STRAIGHT, 316L-12M-BVCO-3	
170	90030-0338		2	NUT, PIPE & CONNECTORS, SS-8-BVCO-4	

Pos	Part No	UN	Qty	Description	Page No

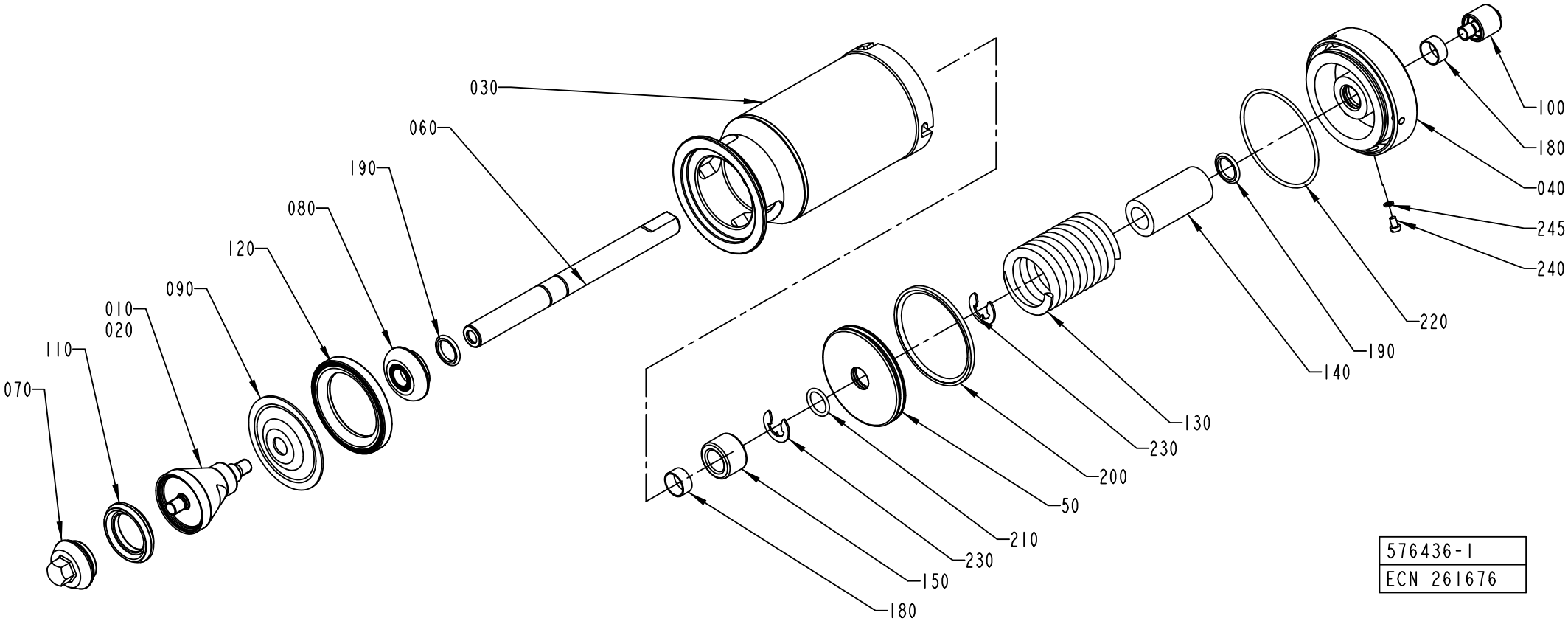
030
060
190
080
120
090
010
020
110
070
100
180
040
245
240
220
190
140
130
230
200
50
210
230
150
180
576436-1
ECN 261676

ECM: 348480 - 20090402
Group number: 576436-0100
Assembly Drawing: 576436-1_1_AC

Pos	Part No	UN	Qty	Description	Page No
2" HVA					
010	2833037-0000		1	SEAL RING	
070	2898203-0000		1	VALVE CONE	
2" NOHVA					
010	2833037-0000		1	SEAL RING	
070	2826442-0000		1	VALVE CONE	
3" NOHVA					
010	530595-0000		1	SEAL RING HOLDER	
070	2826442-0000		1	VALVE CONE	
Common Parts					
030	576439-0000		1	CYLINDER HOUSING	
040	576440-0000		1	END SECTION	
050	576441-0000		1	PISTON	
060	576446-0000		1	PISTON ROD	
080	541166-0000		1	WASHER	
090	533169-0000		1	DIAPHRAGM	
100	553607-0000		1	SLEEVE	
110	2826441-0000		1	SEAL RING	
120	440655-0000		1	RING	
130	440663-0000		1	COMPRESSION SPRING	
140	576448-0000		1	SPACER	
150	576449-0000		1	SPACER	
180	90091-0238		2	WEAR RING 20X22X10 MM	
190	90091-0237		2	ROD SEAL, GLIDORING 20X27,5X3 MM	
200	90091-0336		1	PISTON SEAL GLIDE RING 79X90X4 MM	
210	315204-0215		1	O-RING 19,2X3 MM	
220	315202-0308		1	O-RING 84,5X3 MM	
230	315754-0113		2	LOCKING WAE 15	
240	312125-0323		1	SCREW ISO 1207 M5X8 A4	
245	315233-0101		1	WASHER CAPTIVE SEALING M5(NEW315239-101)	

Pos	Part No	UN	Qty	Description	Page No

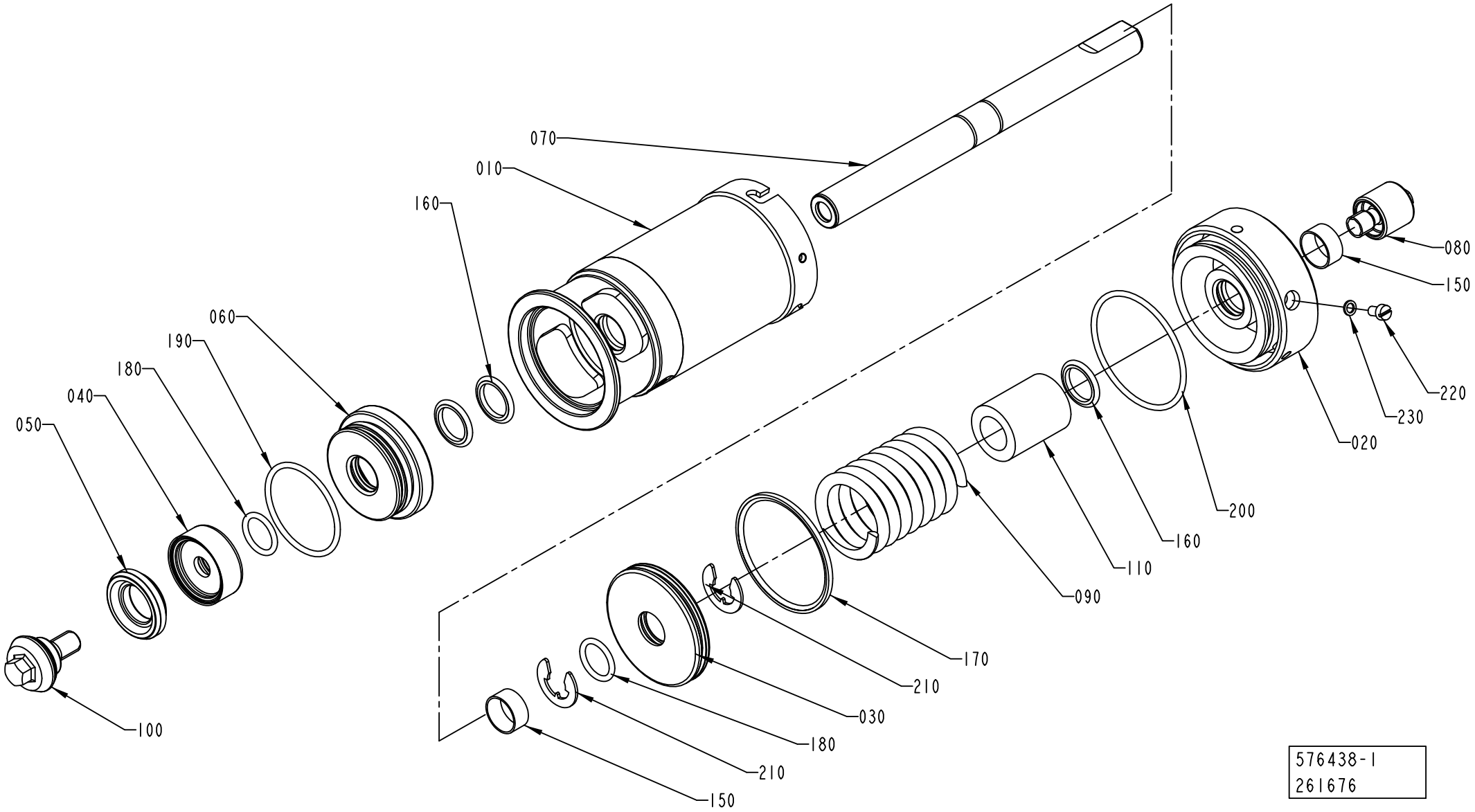
070
010
160
060
190
180
040
050
080
150
220
230
020
200
160
110
090
170
210
030
180
210
150
100
576438-1
261676

ECM: 394361 - 20090623
Group number: 576438-0100
Assembly Drawing: 576438-1_1_AC

Pos	Part No	UN	Qty	Description	Page No
-					
010	576443-0000		1	CYLINDER HOUSING	
020	576444-0000		1	END SECTION	
030	576445-0000		1	PISTON	
040	530587-0000		1	WASHER	
050	2826440-0000		1	SEAL RING	
060	556133-0000		1	SEALING WASHER	
070	576447-0000		1	PISTON ROD	
080	553607-0000		1	SLEEVE	
090	440662-0000		1	COMPRESSION SPRING	
100	2826439-0000		1	VALVE CONE	
110	576451-0000		1	SPACER	
150	90091-0238		2	WEAR RING 20X22X10 MM	
160	90091-0237		3	ROD SEAL, GLIDORING 20X27,5X3 MM	
170	90091-0335		1	PISTON SEAL GLIDE RING 62,5X70X3 MM	
180	315204-0215		2	O-RING 19,2X3 MM	
190	315204-0301		1	O-RING 49,5X3 MM	
200	315202-0304		1	O-RING 64,5X3 MM	
210	315754-0113		2	LOCKING WAE 15	
220	312125-0323		1	SCREW ISO 1207 M5X8 A4	
230	315239-0101		1	NYLON WASHER M5, M5RRP	

Pos	Part No	UN	Qty	Description	Page No

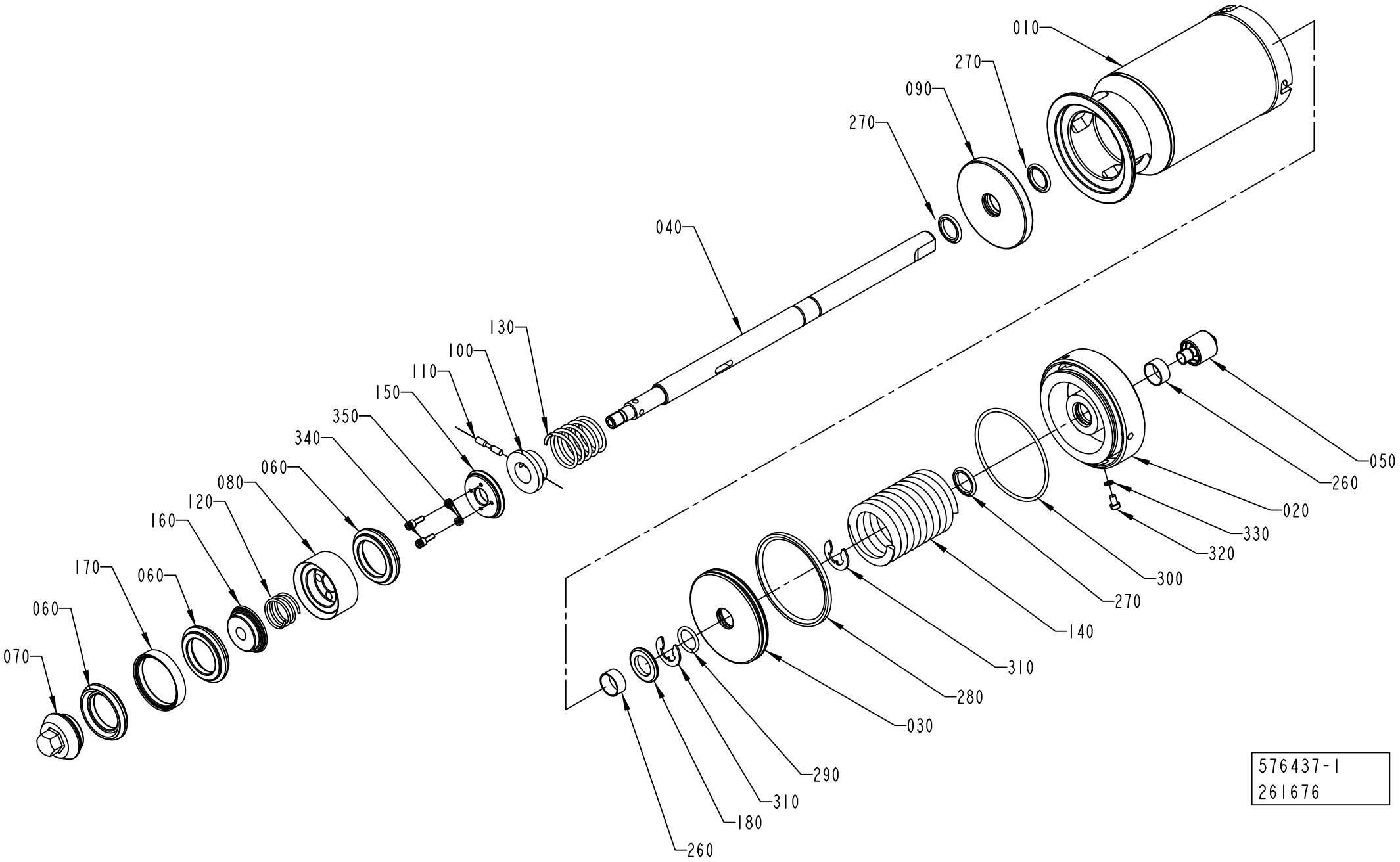
010
270
090
270
040
130
100
110
150
350
340
060
080
120
160
170
060
060
070
050
260
020
330
320
300
270
140
310
280
030
290
310
180
260
576437-1
261676

ECM: 394360 - 20090623
Group number: 576437-0100
Assembly Drawing: 576437-1_1_AC

Pos	Part No	UN	Qty	Description	Page No
-					
010	576439-0000		1	CYLINDER HOUSING	
020	576440-0000		1	END SECTION	
030	576441-0000		1	PISTON	
040	576442-0000		1	PISTON ROD	
050	553607-0000		1	SLEEVE	
060	2826441-0000		3	SEAL RING	
070	2826442-0000		1	VALVE CONE	
080	530591-0000		1	HOLDER	
090	555458-0000		1	SEALING WASHER	
100	440650-0000		1	WASHER	
110	440659-0000		1	CYLINDRICAL PIN	
120	440660-0000		1	COMPRESSION SPRING	
130	440661-0000		1	COMPRESSION SPRING	
140	440663-0000		1	COMPRESSION SPRING	
150	530597-0000		1	WASHER	
160	530598-0000		1	WASHER	
170	530599-0000		2	RING	
180	576450-0000		1	SPACER	
260	90091-0238		2	WEAR RING 20X22X10 MM	
270	90091-0237		3	ROD SEAL, GLIDORING 20X27,5X3 MM	
280	90091-0336		1	PISTON SEAL GLIDE RING 79X90X4 MM	
290	315204-0215		1	O-RING 19,2X3 MM	
300	315202-0308		1	O-RING 84,5X3 MM	
310	315754-0113		2	LOCKING WAE 15	
320	312125-0323		1	SCREW ISO 1207 M5X8 A4	
330	315239-0101		1	NYLON WASHER M5, M5RRP	
340	312115-0291		4	SCREW ISO4762 M4X12 A4 80	
350	315402-0136		4	LOCK WASHER FBB 4,1	

Pos	Part No	UN	Qty	Description	Page No

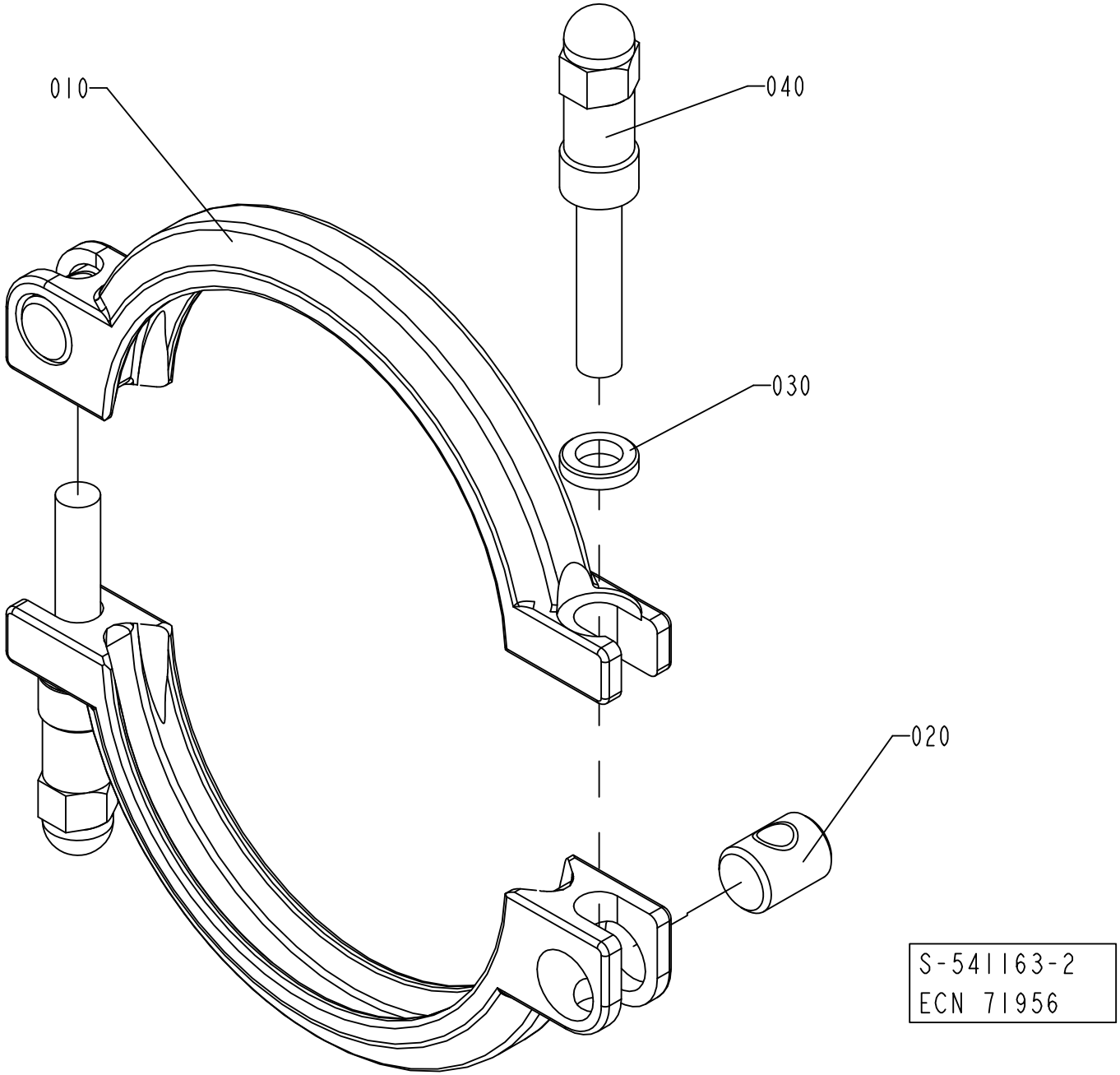
010
040
030
020
S-541163-2
ECN 71956

ECM: 343597 - 20080402
Group number: 541163-0200
Assembly Drawing: 541163-2_1_AB

Pos	Part No	UN	Qty	Description	Page No
-					
010	532117-0000		2	CLAMP RING	
020	497748-0000		2	PIN	
030	541165-0000		2	WASHER	
040	554162-0000		2	SCREW	

Pos	Part No	UN	Qty	Description	Page No

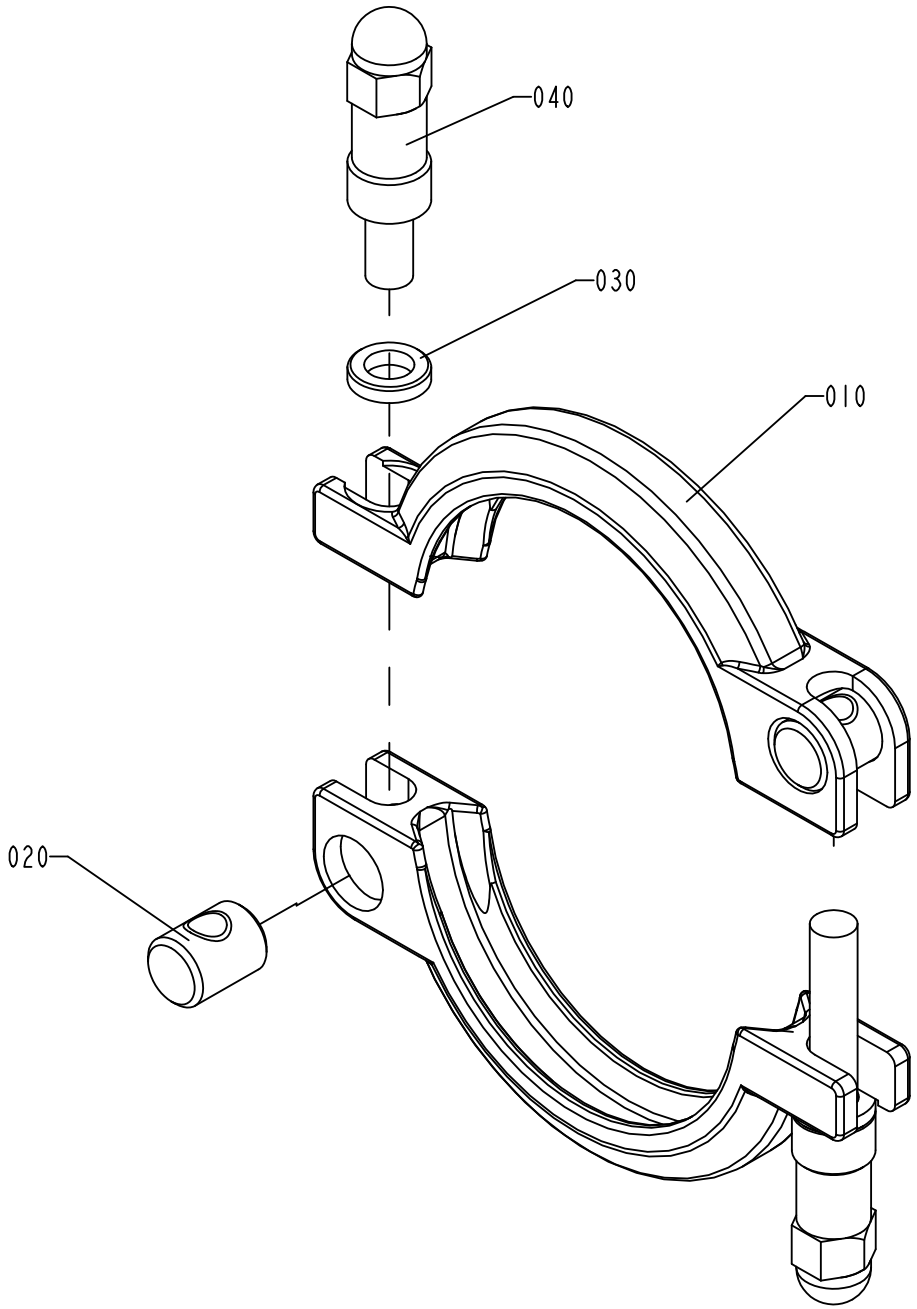

S-541164-2
ECN 71956

ECM: 343598 - 20080402
Group number: 541164-0200
Assembly Drawing: 541164-2_1_AB

Pos	Part No	UN	Qty	Description	Page No
-					
010	532118-0000		2	CLAMP RING	
020	497748-0000		2	PIN	
030	541165-0000		2	WASHER	
040	554162-0000		2	SCREW	

Pos	Part No	UN	Qty	Description	Page No

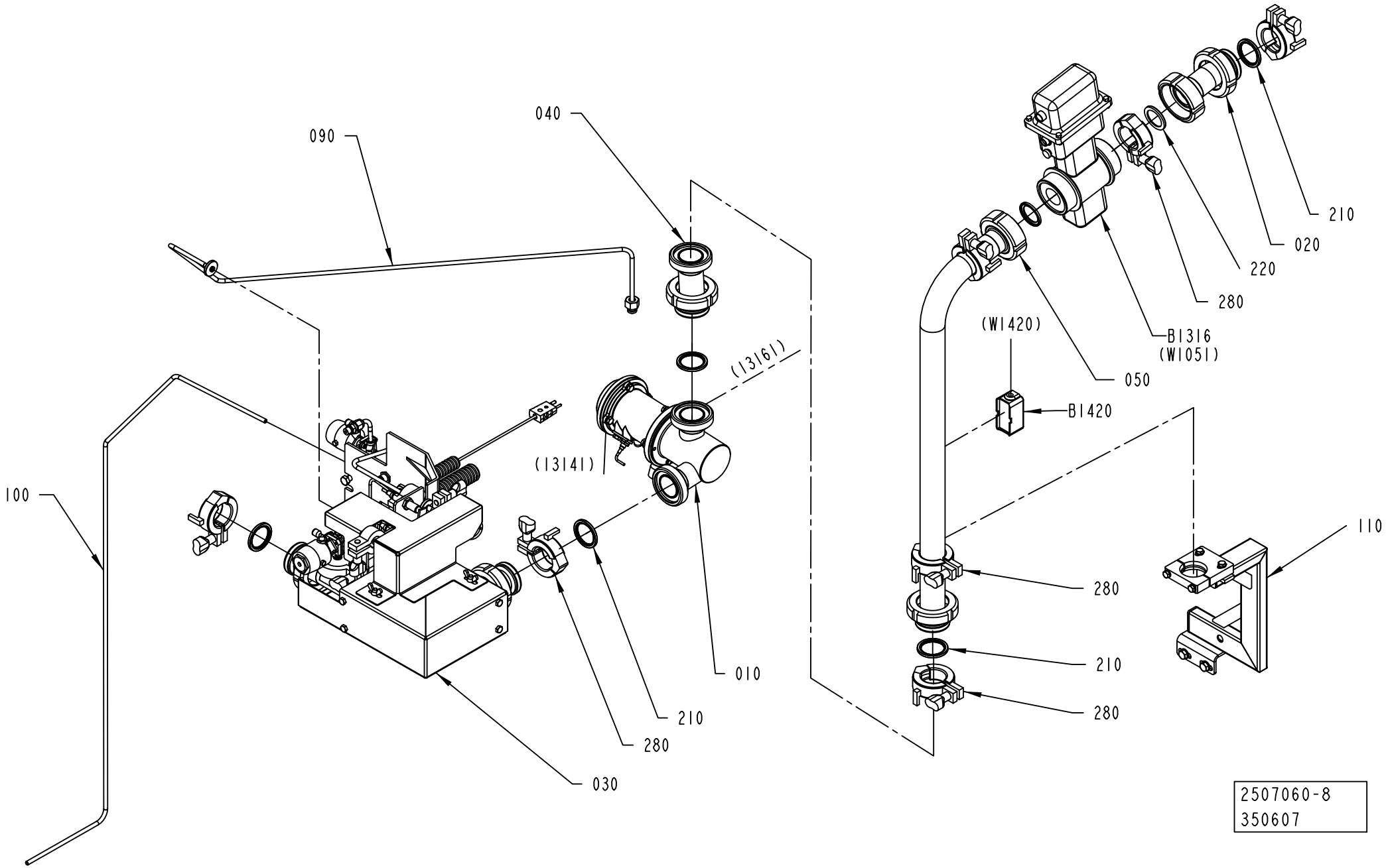
040
090
100
(13161)
(13141)
010
210
280
030
210
020
220
280
(W1420)
B1316
(W1051)
050
B1420
110
280
210
280
2507060-8
350607

Pos	Part No	UN	Qty	Description	Page No
A3/FLEX NOHI (See drawing on page: 1-280)					
030	2833043-0000		1	ELBOW PIPE	
050	2833046-0000		1	CONNECTING PIPE	
	90459-4179		*1*	*GASKET 30,5X42X4 MM FDA*	
060	3005136-0000		1	COVER	
070	1140480-0000		1	CLAMP	
080	1041988-0000		1	CLAMP	
110	2726570-0200		1	TUBE HOLDER	**1-283**
290	312105-0362		2	SCREW M6S ISO 4017 M6X8 A480	
300	312109-0376		2	SCREW M6S ISO 4017 M6X35 A480	
A3/FLEX TBA 0200M HI, A3/FLEX TBA 0250B HI, A3/FLEX TBA 0200B HI, A3/FLEX TBA 0200S HI, A3/FLEX TBA 0330S HI, A3/FLEX TBA 1000B HI, A3/FLEX TBA 1000SQ HI, A3/FLEX TPA 0500SQ HI, A3/FLEX TBA 0250S HI, A3/FLEX TBA 0500B HI, A3/FLEX TBA 1000S HI, A3/FLEX TPA 0330SQ HI, A3/FLEX TPA 1000SQ HI, A3/FLEX TBA 1500S HI, A3/FLEX TBA 0500S HI, A3/FLEX TPA 0750SQ HI, A3/FLEX TBA 0200SQ HI, A3/FLEX TBA 0250SQ HI, A3/FLEX TPA 0250SQ HI, A3/FLEX TPA 0200SQ HI, A3/FLEX TBA 1400B HI (See drawing on page: 1-278)					
030	2632642-0200		1	NOZZLE UNIT	**1-285**
050	2833046-0000		1	CONNECTING PIPE	
	90459-4179		*1*	*GASKET 30,5X42X4 MM FDA*	
090	2867486-0000		1	PIPE	
100	2834329-0000		1	PIPE	
110	2726570-0200		1	TUBE HOLDER	**1-283**
A3/FLEX TBA 2000S HI, A3/FLEX TBA 1890S HI (See drawing on page: 1-278)					
030	2632642-0200		1	NOZZLE UNIT	**1-285**
050	2833047-0000		1	CONNECTING PIPE	
090	2867486-0000		1	PIPE	
100	2834329-0000		1	PIPE	
110	2726570-0200		1	TUBE HOLDER	**1-283**
Common Parts					
010	2507059-0300		1	REGULATING VALVE	**1-287**
020	2672963-0000		1	CONNECTING PIPE	
	90459-4179		*1*	*GASKET 30,5X42X4 MM FDA*	
040	2826437-0000		1	ECCENTRIC	
210	90217-0348		5	GASKET 35,4X46,8X4 MM	
220	90459-4179		2	GASKET 30,5X42X4 MM FDA	
280	2552201-0000		7	LOCKING DEVICE	
B1316	90458-0806		1	FLOW METER, NO. XF DF23-DN32	
B1420	90459-0181		1	PIPE SURFACE THERM., PT-100 -50° -+120°C	

Pos	Part No	UN	Qty	Description	Page No

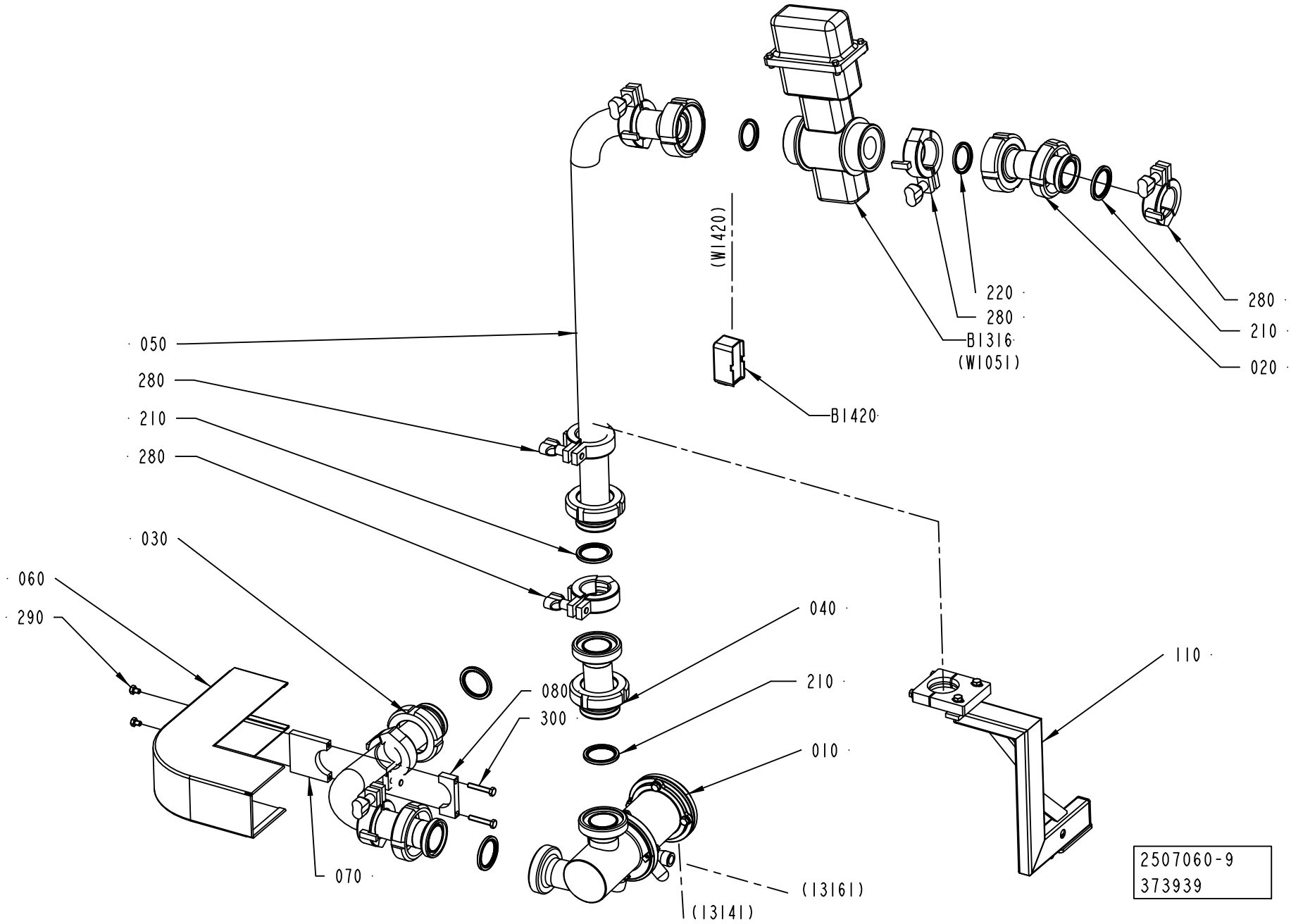
(W1420)
220
280
B1316
(W1051)
280
210
020
B1420
050
280
210
280
030
060
290
040
080
300
210
010
110
070
(13161)
(13141)
2507060-9
373939

Pos	Part No	UN	Qty	Description	Page No
A3/FLEX NOHI (See drawing on page: 1-280)					
030	2833043-0000		1	ELBOW PIPE	
050	2833046-0000		1	CONNECTING PIPE	
	90459-4179		*1*	*GASKET 30,5X42X4 MM FDA*	
060	3005136-0000		1	COVER	
070	1140480-0000		1	CLAMP	
080	1041988-0000		1	CLAMP	
110	2726570-0200		1	TUBE HOLDER	**1-283**
290	312105-0362		2	SCREW M6S ISO 4017 M6X8 A480	
300	312109-0376		2	SCREW M6S ISO 4017 M6X35 A480	
A3/FLEX TBA 0200M HI, A3/FLEX TBA 0250B HI, A3/FLEX TBA 0200B HI, A3/FLEX TBA 0200S HI, A3/FLEX TBA 0330S HI, A3/FLEX TBA 1000B HI, A3/FLEX TBA 1000SQ HI, A3/FLEX TPA 0500SQ HI, A3/FLEX TBA 0250S HI, A3/FLEX TBA 0500B HI, A3/FLEX TBA 1000S HI, A3/FLEX TPA 0330SQ HI, A3/FLEX TPA 1000SQ HI, A3/FLEX TBA 1500S HI, A3/FLEX TBA 0500S HI, A3/FLEX TPA 0750SQ HI, A3/FLEX TBA 0200SQ HI, A3/FLEX TBA 0250SQ HI, A3/FLEX TPA 0250SQ HI, A3/FLEX TPA 0200SQ HI, A3/FLEX TBA 1400B HI (See drawing on page: 1-278)					
030	2632642-0200		1	NOZZLE UNIT	**1-285**
050	2833046-0000		1	CONNECTING PIPE	
	90459-4179		*1*	*GASKET 30,5X42X4 MM FDA*	
090	2867486-0000		1	PIPE	
100	2834329-0000		1	PIPE	
110	2726570-0200		1	TUBE HOLDER	**1-283**
A3/FLEX TBA 2000S HI, A3/FLEX TBA 1890S HI (See drawing on page: 1-278)					
030	2632642-0200		1	NOZZLE UNIT	**1-285**
050	2833047-0000		1	CONNECTING PIPE	
090	2867486-0000		1	PIPE	
100	2834329-0000		1	PIPE	
110	2726570-0200		1	TUBE HOLDER	**1-283**
Common Parts					
010	2507059-0300		1	REGULATING VALVE	**1-287**
020	2672963-0000		1	CONNECTING PIPE	
	90459-4179		*1*	*GASKET 30,5X42X4 MM FDA*	
040	2826437-0000		1	ECCENTRIC	
210	90217-0348		5	GASKET 35,4X46,8X4 MM	
220	90459-4179		2	GASKET 30,5X42X4 MM FDA	
280	2552201-0000		7	LOCKING DEVICE	
B1316	90458-0806		1	FLOW METER, NO. XF DF23-DN32	
B1420	90459-0181		1	PIPE SURFACE THERM., PT-100 -50° -+120°C	

Pos	Part No	UN	Qty	Description	Page No

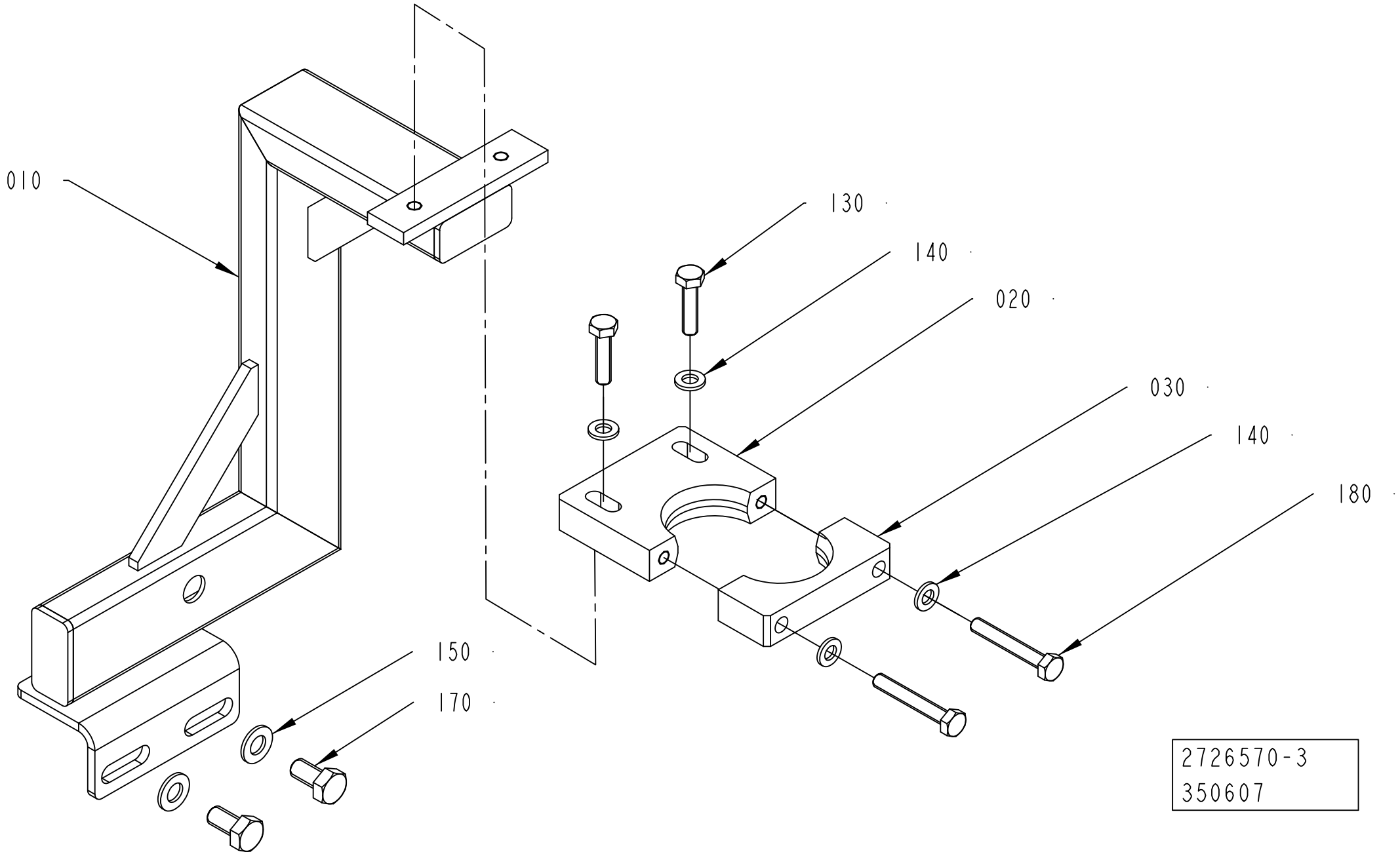
010
130
140
020
030
140
180
150
170
2726570-3
350607

ECM: 352047 - 20080701
Group number: 2726570-0200
Assembly Drawing: 2726570-3_1_AA

Pos	Part No	UN	Qty	Description	Page No
-					
010	2966480-0000		1	BRACKET	
020	2788618-0000		1	CLAMP	
030	2788619-0000		1	CLAMP	
130	312105-0372		2	SCREW M6S ISO 4017 M6X25 A480	
140	315105-0153		4	WASHER BRB 6,4X12 RFR	
150	315105-0165		2	WASHER BRB 8,4X16 RFR	
170	312105-0449		2	SCREW M6S ISO 4017 M8X16 A480	
180	312109-0378		2	SCREW M6S ISO 4017 M6X40 A480	

Pos	Part No	UN	Qty	Description	Page No

NOZZLE UNIT

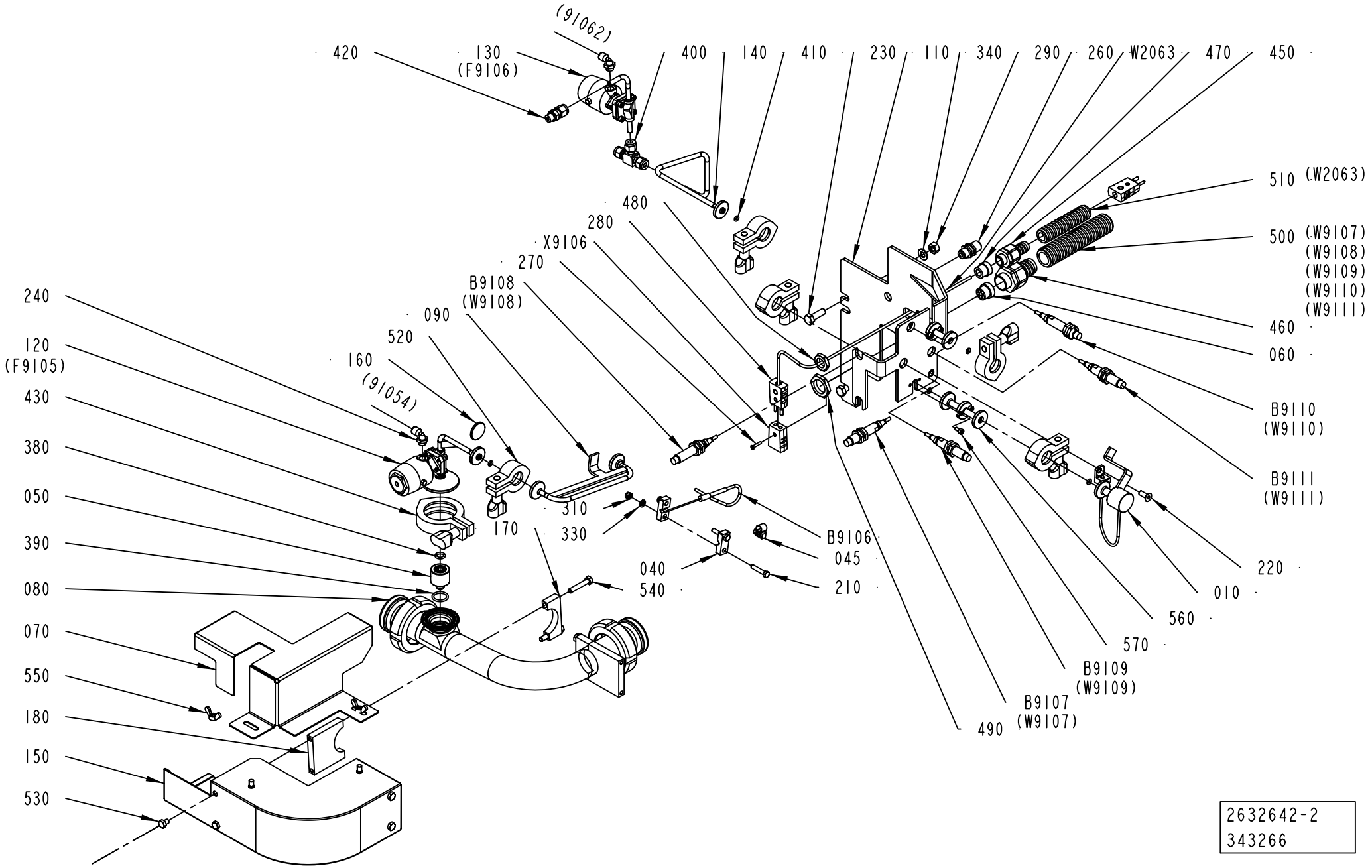

2632642-2
343266

ECM: 401444 - 20091002
Group number: 2632642-0200
Assembly Drawing: 2632642-2_1_AF

Pos	Part No	UN	Qty	Description	Page No
A3/FLEX					
500	90152-0051	MM	2100	SPIRAL CONDUIT, 25X18, UL 1816	
510	90152-0059	MM	700	SPIRAL CONDUIT, 18X12, UL 1211	
W2063	90220-0034	MM	7000	THERMOCABLE TEX/SITW-20F-KX 2X0,5MM2	
Common Parts					
010	2696109-0000		1	PLUG	
040	2939863-0000		2	CLAMP	
045	90132-0021		1	HOSE CLIP 6-10MM	
050	1523154-0006		1	SPRAY NOZZLE	
050	1523154-0003		1	SPRAY NOZZLE	
050	1523154-0004		1	SPRAY NOZZLE	
050	1523154-0005		1	SPRAY NOZZLE	
060	2559051-0000		1	INSERT	
070	2763994-0000		1	COVER	
080	2763949-0000		1	ELBOW PIPE	
090	2715602-0000		1	PIPE	
110	2696106-0000		1	BRACKET	
120	2696112-0000		1	VALVE BODY	
	90600-0500		*1*	*DIAPHRAGM VALVE, 650 4D 0405A10T1 CF02*	
	90600-0491		*1*	*ACTUATOR, 9650-0089-Z-I-OTI*	
	90600-0493		*1*	*DIAPHRAGM 3A, 600-8M-5AD*	
130	2696111-0000		1	VALVE BODY	
	90600-0500		*1*	*DIAPHRAGM VALVE, 650 4D 0405A10T1 CF02*	
	90600-0491		*1*	*ACTUATOR, 9650-0089-Z-I-OTI*	
	90600-0493		*1*	*DIAPHRAGM 3A, 600-8M-5AD*	
140	2696108-0000		1	PIPE	
150	2998831-0000		1	COVER	
160	90600-0614		1	BLANK PLUG, 16AMP-316-1/2"-3/4"-AR	
170	1041988-0000		2	CLAMP	
180	1140480-0000		2	CLAMP	
210	312105-0333		2	SCREW M6S ISO 4017 M5X25 A480	
220	312155-0368		1	SCREW DIN 7991 MF6S M6X16 A4 70	
230	312105-0453		2	SCREW M6S ISO 4017 M8X25 A480	
240	90458-2956		2	ELBOW PIPE JOINT, EXT.THREAD, D=6MM-G1/8	
260	342768-0102		1	BULKHEAD CONNECTOR, 6 MM	
270	312145-0228		1	SCREW ISO 2009 MFS M3X16 A4	
280	90326-0022		2	PLUG, MALE YELLOW CR-AL	
290	312605-0318		2	HEXAGON NUT, M6M M8 A280	
310	312812-0314		2	HEXAGON NUT, NY-LOCK M5 A480	
330	315105-0146		2	WASHER BRB 5,3X10 RFR	
340	315105-0165		2	WASHER BRB 8,4X16 RFR	
380	315204-0208		1	O-RING 9,3X2,4 MM	
390	315204-0214		1	O-RING 17,3X2,4 MM	
400	90030-0571		1	CONN. T-PIPE 6	
410	90600-0495		5	O-RING 4X2 MM	
420	90459-1424		1	CONN. STR., 6-G1/8, EXT. THREAD	
430	342840-0103		1	CLAMPING PIECE DN 1-11/2, GH13LAH112304N	
450	353243-0001		1	HOSE GLAND W/O INSERT PG9 EXTENDED	
460	353243-0005		1	HOSE GLAND W/O INSERT PG16 EXTENDED	
470	353249-0009		1	INSERT, SINGLE HOLE, EK 152/9	
480	90099-0104		1	NUT, PR 15,2 (PG9)	
490	90099-0110		1	NUT, PR 22,5 (PG16)	
520	342840-0101		5	CLAMP, 12,7 AND 19,1 MM 3-A PCS+PMCS	
530	312105-0362		4	SCREW M6S ISO 4017 M6X8 A480	
540	312109-0376		4	SCREW M6S ISO 4017 M6X35 A480	
550	312715-0116		2	WING NUT DIN 315 A2 MVM-K M6	
560	2847310-0000		2	CONNECTION	
570	312115-0287		4	SCREW ISO4762 M4X8 A4 80	
B9106	90326-0060		1	THERMOCOUPLE, CR-AL	
B9107	90600-0463		1	INDUCTIVE SWITCH,E2A-M12LN05-WP-B1-TP 5M	
B9108	90600-0463		1	INDUCTIVE SWITCH,E2A-M12LN05-WP-B1-TP 5M	
B9109	90600-0463		1	INDUCTIVE SWITCH,E2A-M12LN05-WP-B1-TP 5M	
B9110	90600-0463		1	INDUCTIVE SWITCH,E2A-M12LN05-WP-B1-TP 5M	
B9111	90600-0463		1	INDUCTIVE SWITCH,E2A-M12LN05-WP-B1-TP 5M	
X9106	90326-0020		1	PLUG, FEMALE YELLOW CR-AL	

Machine Type	Group Description	Used-In	Group Number	Page No

REGULATING VALVE

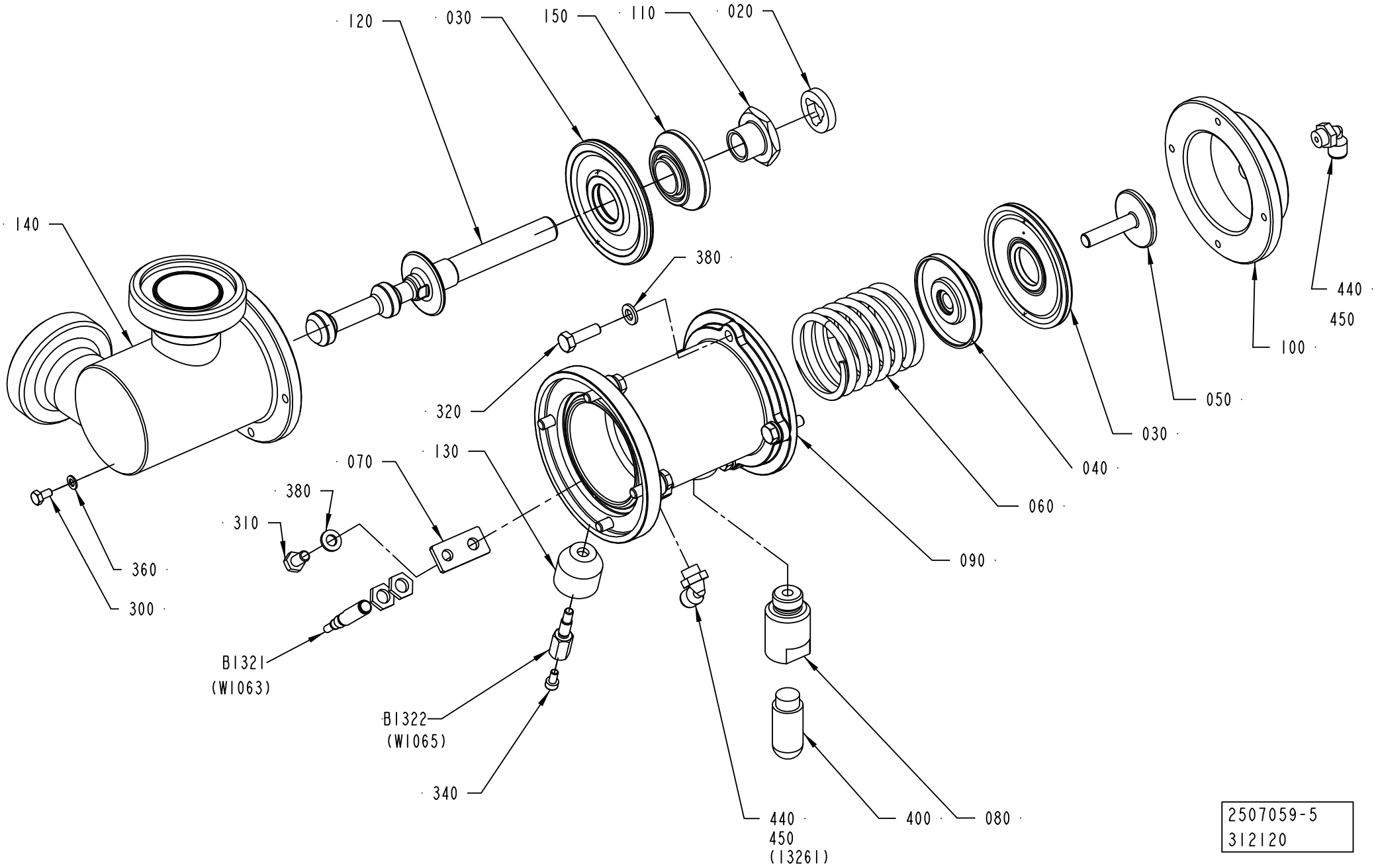

2507059-5
312120

ECM: 383501 - 20090115
Group number: 2507059-0300
Assembly Drawing: 2507059-5_1_AB

Pos	Part No	UN	Qty	Description	Page No
A3/FLEX TBA 0200S, A3/FLEX TBA 0200B, A3/FLEX TBA 0250B, A3/FLEX TBA 0330S, A3/FLEX TPA 0330SQ, A3/FLEX TBA 0200M, A3/FLEX TBA 0250S, A3/FLEX TPA 0250SQ, A3/FLEX TPA 0200SQ, A3/FLEX TBA 0200SQ, A3/FLEX TBA 0250SQ					
120	2790432-0000		1	SHUTTER	
140	2562704-0000		1	BODY	
A3/FLEX TBA 0500B, A3/FLEX TBA 1000B, A3/FLEX TBA 1000S, A3/FLEX TBA 1000SQ, A3/FLEX TPA 1000SQ, A3/FLEX TPA 0500SQ, A3/FLEX TBA 0500S, A3/FLEX TPA 0750SQ, A3/FLEX TBA 0500SQ, A3/FLEX TGA 1000SQ, A3/FLEX TGA 0500SQ, A3/FLEX TGA 0750SQ					
120	2790430-0000		1	SHUTTER	
140	1548230-0000		1	BODY	
A3/FLEX TBA 1500S, A3/FLEX TBA 1400B					
120	2790431-0000		1	SHUTTER	
140	1498526-0000		1	REGULATOR BODY	
A3/FLEX TBA 1890S, A3/FLEX TBA 2000S					
120	2790429-0000		1	SHUTTER	
140	2500078-0000		1	BODY	
Common Parts					
020	2594043-0000		1	SHOCK ABSORBER	
030	925998-0000		2	DIAPHRAGM	
040	2693622-0000		1	SPACER	
050	926907-0000		1	SCREW	
060	1195397-0000		1	COMPRESSION SPRING	
070	926934-0000		1	SUPPORT	
080	927044-0000		1	SPACER	
090	2790433-0000		1	BODY	
100	927203-0000		1	COVER	
110	979434-0000		1	FERRULE	
130	1478813-0000		1	SPACER	
150	1511600-0000		1	SPACER	
300	312105-0287		1	SCREW M6S ISO 4017 M4X8 A470	
310	312105-0366		1	SCREW M6S ISO 4017 M6X12 A480	
320	312105-0370		8	SCREW M6S ISO 4017 M6X20 A480	
340	312115-0287		1	SCREW ISO4762 M4X8 A4 80	
360	315105-0136		1	WASHER BRB 4,3X8 RFR	
380	315105-0153		9	WASHER BRB 6,4X12 RFR	
400	90328-0026		1	SILENCER G1/4"	
440	90458-2956		2	ELBOW PIPE JOINT, EXT.THREAD, D=6MM-G1/8	
450	90144-0073		1	TREBOFLON-TAPE W=13MM	
B1321	90600-0473		1	INDUCTIVE SWITCH E2A-S08KS01-WP-B1-TP 5M	
B1322	1478814-0000		1	SENSOR	

Pos	Part No	UN	Qty	Description	Page No

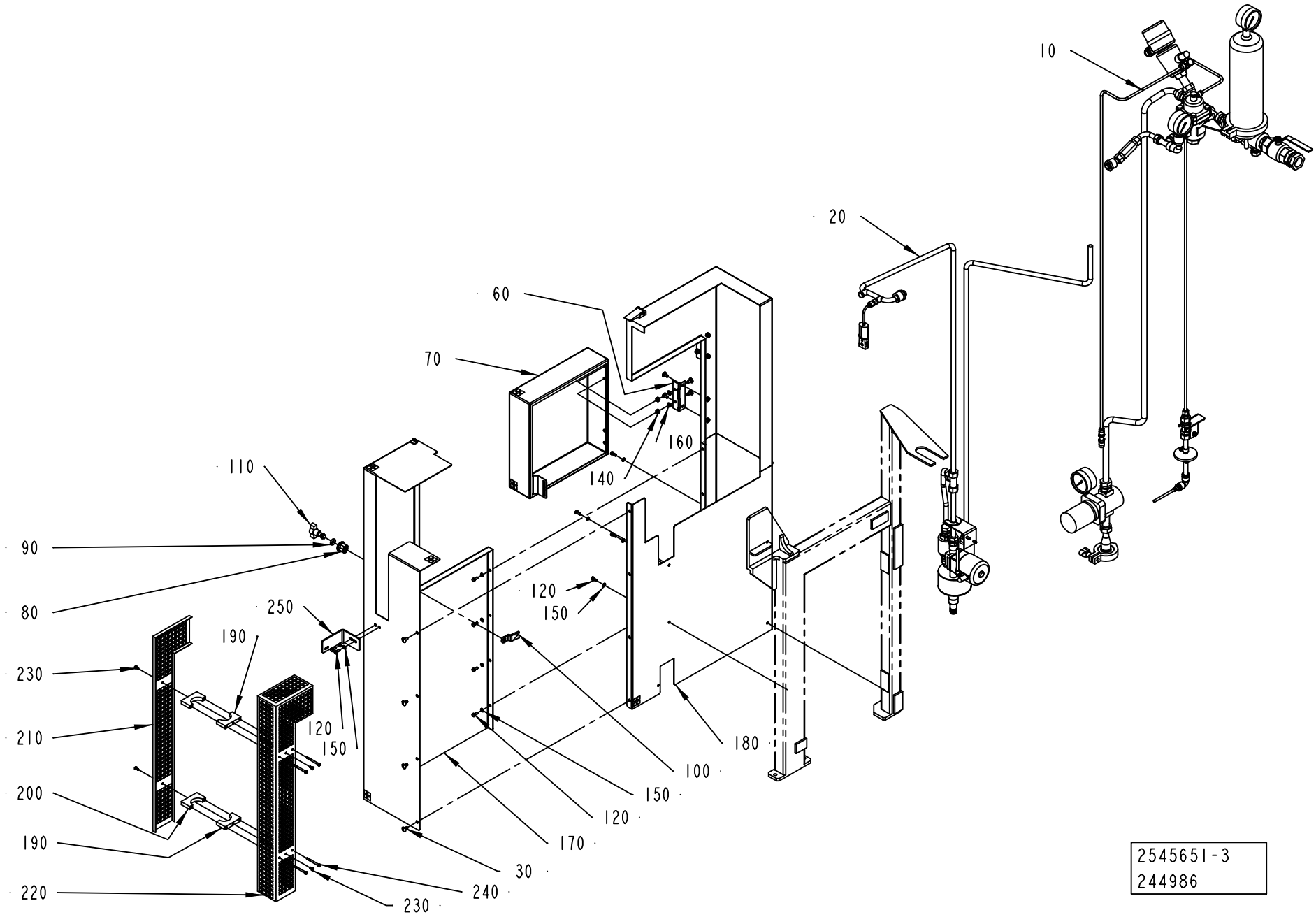
10
20
60
70
160
140
110
90
80
250
190
230
210
200
190
220
120
150
120
150
100
150
120
180
170
30
240
230
2545651-3
244986

ECM: 271730 - 20070102
Group number: 2545651-0200
Assembly Drawing: 2545651-3_1_AC

Pos	Part No	UN	Qty	Description	Page No
A3/FLEX					
190	2748216-0000		2	CLAMP	
200	2748217-0000		2	CLAMP	
210	2748218-0000		1	TOUCH GUARD	
220	2748219-0000		1	TOUCH GUARD	
230	312105-0287		4	SCREW M6S ISO 4017 M4X8 A470	
240	312105-0303		4	SCREW M6S ISO 4017 M4X40 A470	
Common Parts					
010	2544199-0300		1	STEAM PIPE	**1-291**
020	2552215-0300		1	STEAM TRAP	**1-293**
030	927354-0000		12	SCREW	
060	2711251-0000		2	HINGE	
070	2711254-0000		1	COVER	
080	90237-0319		1	LOCK HOUSING, 1000-U134	
090	90237-0323		1	LOCK O-RING, 1000-24	
100	90237-0335		1	LOCKING CATCH	
110	90237-0337		1	LOCK HANDLE FOR 90237-319	
120	312105-0327		10	SCREW M6S ISO 4017 M5X12 A480	
140	312605-0316		4	HEXAGON NUT, M6M M6 A280	
150	315105-0146		10	WASHER BRB 5,3X10 RFR	
160	315105-0153		4	WASHER BRB 6,4X12 RFR	
170	2711247-0000		1	COVER	
180	2711245-0000		1	COVER	
250	2748220-0000		1	HANGER	

Pos	Part No	UN	Qty	Description	Page No

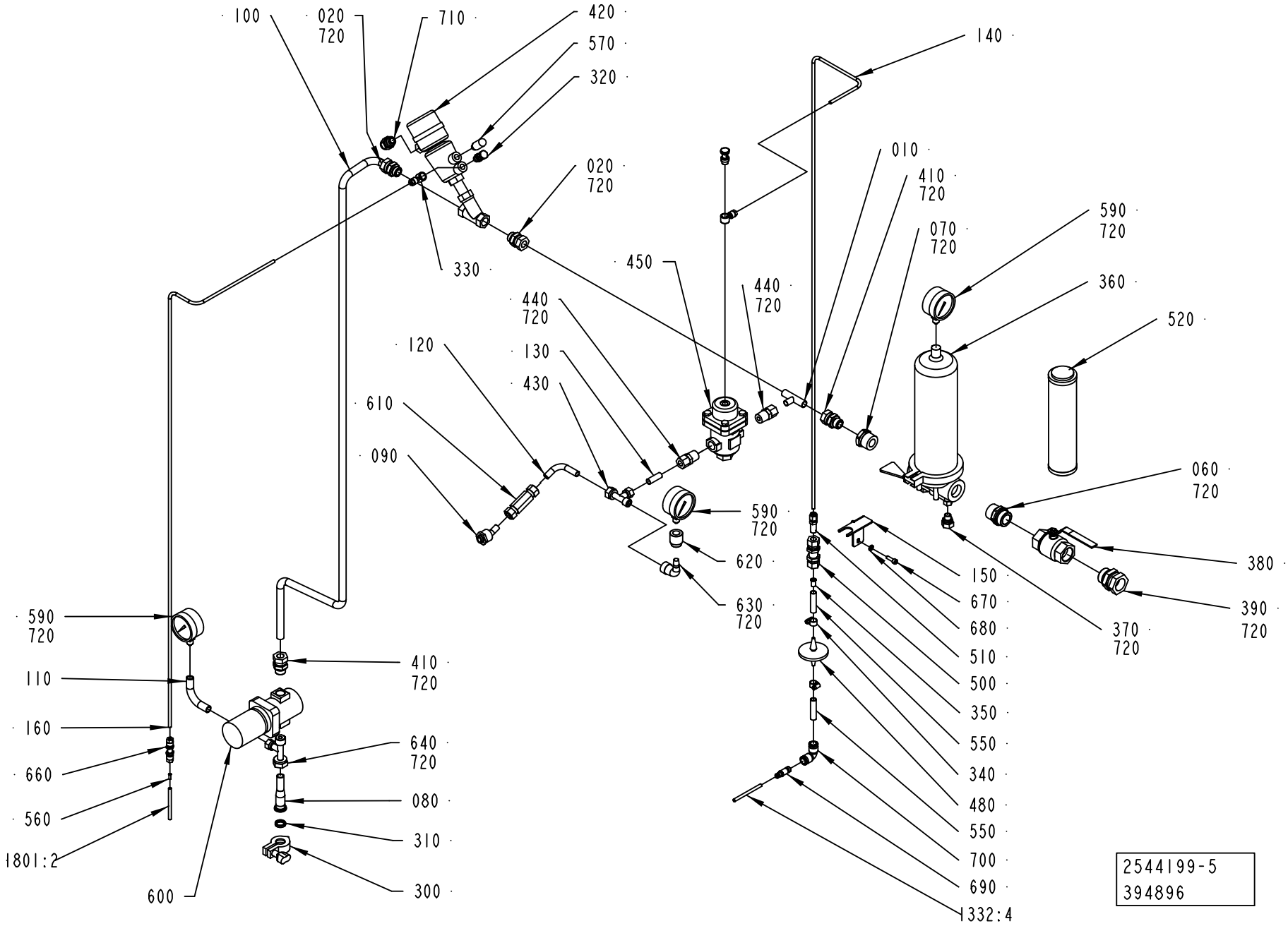
100
020
720
710
420
570
320
020
720
330
140
010
410
720
070
720
590
720
360
520
450
440
720
440
720
120
130
430
610
090
590
720
620
630
720
060
720
380
390
720
370
720
150
670
680
510
500
350
550
340
480
550
700
690
1332:4
590
720
110
160
660
560
1801:2
600
410
720
640
720
080
310
300
2544199-5
394896

ECM: 395154 - 20091001
Group number: 2544199-0300
Assembly Drawing: 2544199-5_1_AC

Pos	Part No	UN	Qty	Description	Page No
-					
010	2695987-0000		1	PIPE	
020	2522195-0000		2	CONNECTION	
060	2552776-0000		1	ADAPTER	
070	2552777-0000		1	ADAPTER	
080	2868043-0000		1	PIPE	
090	2695990-0000		1	PIPE	
100	2833349-0000		1	STEAM PIPE	
110	2582590-0000		1	PIPE	
120	2695991-0000		1	PIPE	
130	2695992-0000		1	PIPE	
13324	90166-0193	MM	1000	TUBE 6 MM PUR BLUE	
140	2695993-0000		1	PIPE	
150	2616298-0000		1	BRACKET	
160	2695989-0000		1	PIPE	
18012	90166-0193	MM	2000	TUBE 6 MM PUR BLUE	
300	90600-3559		1	CLAMPING PIECE, 211290	
310	90600-3558		1	GASKET 16,2X21,8X4,45 MM 3/4"	
320	342980-0304		2	BANJO-HOLLOW BOLT COUPL,EXT.THR.01-G1/4	
330	342797-0122		2	CONN. BANJO, RINGPIECE 6-1/4	
340	342991-0100		2	HOSE CLIP,WORM DRIVE TYPE 10-13	
350	342706-0195		1	STIFFNER SLEEVE FOR HOSE 12X1,5	
360	90459-5503		1	FILTER HOUSING / IDL 11 GB 16 C2H	
	315205-0545		*1*	*3-RING 91,44X5,33 MM*	
370	90030-0088		1	CONN. STR., 12-R1/4, EXT. THREAD	
380	90187-0096		1	BALL VALVE G1	
390	90030-0193		1	CONN. STR. GA-28-G1	
410	90030-0188		2	CONN. STR. GA-15-G1/2	
420	90459-1235		1	ANGLE SEAT VALVE, N.C. DN13 TYPE 2002	
430	342751-0215		1	PIPE FITTING TEE	
440	90030-0180		2	CONN. STR. GE12L1/2NPT71	
450	90458-2264		1	PRESSURE REGULATOR ARC-30-1/2"	
	90458-2655		*1*	*STRAINER FOR ARC-30-1/2"*	
	90458-2654		*1*	*GASKET KIT FOR ARC-30-1/2"*	
	90458-2653		*1*	*BELLOWS AISI 316L FOR ARC-30-1/2"*	
480	90458-2554		1	STERILE GRADE MEMBRANE FILTER 0,2µM	
490	90166-0195	MM	50	TUBE 12 MM PA BLUE	
500	90030-0030		1	CONN. BULKHEAD SV12L71	
510	90030-0481		1	REDUCER M12TURM6-316	
520	90277-0355		1	FILTER INSERT / MBS 100 IPH	
550	90166-0195	MM	50	TUBE 12 MM PA BLUE	
560	342706-0130		1	STIFFNER SLEEVE FOR HOSE 6X1	
570	90328-0026		1	SILENCER G1/4"	
590	90043-0082		3	PRESSURE GAUGE, 2740, D=63 MM	
600	90113-0064		1	PRESSURE REGULATOR	
	90458-2654		*1*	*GASKET KIT FOR ARC-30-1/2"*	
610	90459-4686		1	NON-RETURN VALVE, M12A-C6L-1-EPR-SS	
620	90330-0011		1	SLEEVE, REDUCTION, INT, R-2023/8X1/4	
630	90330-0172		1	ELBOW, 90 INT/EXT, SS-6-SE	
640	342751-0221		1	PIPE FITTING TEE	
660	90224-0349		1	CONN. BULKHEAD. 1250-6	
670	312115-0370		2	SCREW ISO4762 M6X20 A4 80	
680	315105-0153		2	WASHER BRB 6,4X12 RFR	
690	342716-0210		1	REDUCER 6-12	
700	342735-0109		1	ELBOW PIPE JOINT	
710	352103-0106		1	CABLE GLAND, ST 11, PR18,6/PG11	
720	90144-0073		1	TREBOFLON-TAPE W=13MM	

Machine Type	Group Description	Used-In	Group Number	Page No

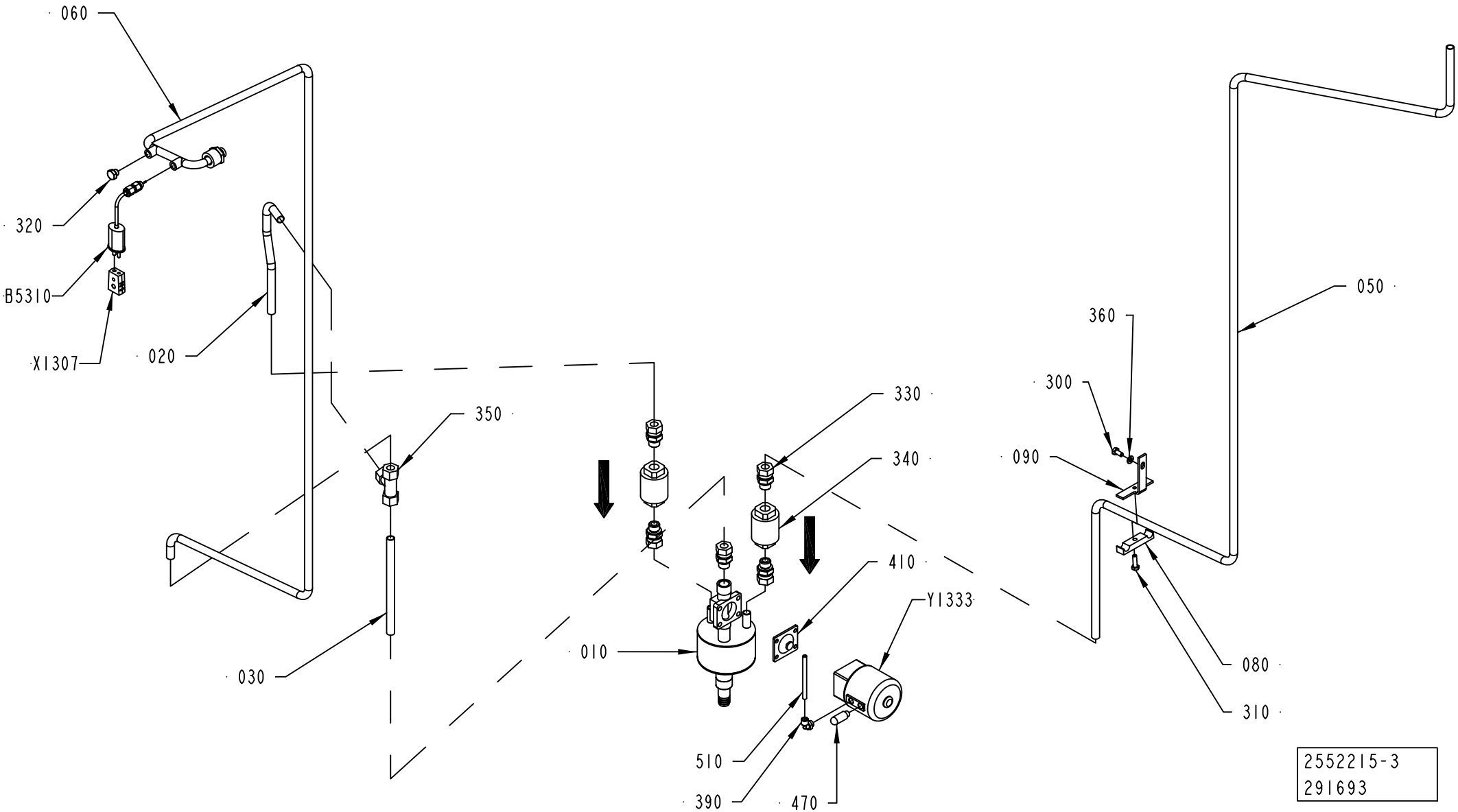
060
320
B5310
X1307
020
030
350
330
340
410
Y1333
010
510
390
470
360
300
090
050
080
310
2552215-3
291693

ECM: 387756 - 20090402
Group number: 2552215-0300
Assembly Drawing: 2552215-3_1_AA

Pos	Part No	UN	Qty	Description	Page No
-					
010	2695994-0000		1	ATTACHMENT PIPE	
020	2696037-0000		1	PIPE	
030	2696025-0000		1	PIPE	
050	2867480-0000		1	PIPE	
060	2867481-0000		1	PIPE	
080	2517371-0000		1	CLAMP	
090	2867485-0000		1	BRACKET	
300	312105-0366		1	SCREW M6S ISO 4017 M6X12 A480	
310	312105-0370		1	SCREW M6S ISO 4017 M6X20 A480	
320	90330-0066		1	PLUG, EXT. G-THREAD, G1/8	
330	90030-0187		5	CONN. STR. GA-12-G3/8	
340	90360-0020		2	STEAM TRAP / MK36/51 3/8 INCH	
	90360-0309		*1*	*STRAINER, FOR STEAM TRAP 90360-20*	
	90360-0310		*1*	*CAPSULE, FOR STEAM TRAP 90360-20*	
350	90030-0058		1	CONN. T-PIPE T-12	
360	315105-0153		1	WASHER BRB 6,4X12 RFR	
390	90458-2956		1	ELBOW PIPE JOINT, EXT.THREAD, D=6MM-G1/8	
410	90459-5901		1	DIAPHRAGM, 425 EPM SIZE 15	
470	90328-0047		1	SILENCER G1/8"	
510	90166-0193	MM	1500	TUBE 6 MM PUR BLUE	
B5310	90326-0089		1	THERMOCOUPLE, 5110-089-000	
X1307	90326-0020		1	PLUG, FEMALE YELLOW CR-AL	
Y1333	90187-0110		1	DIAPHRAGM VALVE DN15, NC WELD CONN.	

Pos	Part No	UN	Qty	Description	Page No

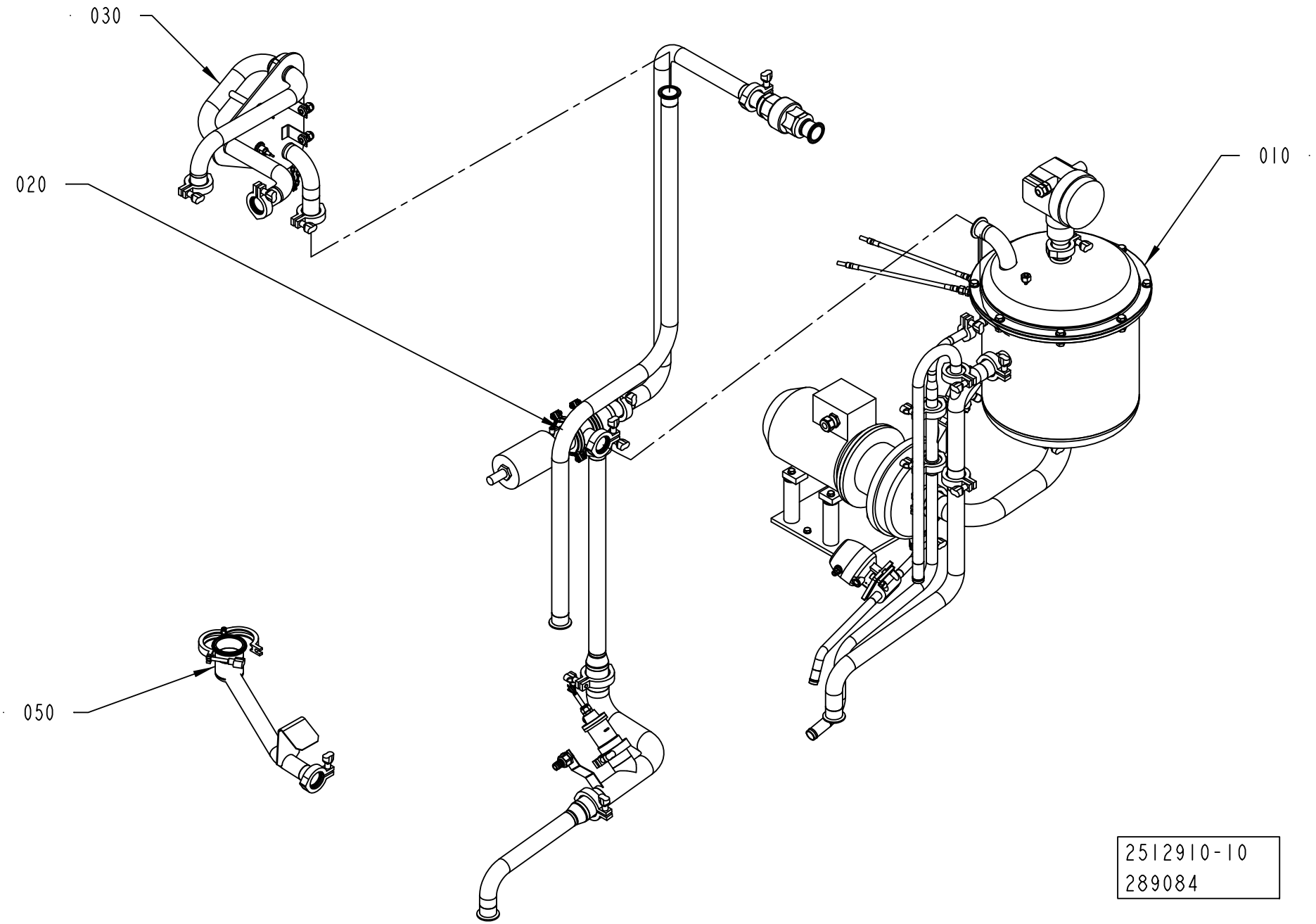
030
020
010
050
2512910-10
289084

ECM: 290839 - 20070102
Group number: 2512910-0300
Assembly Drawing: 2512910-10_1_AA

Pos	Part No	UN	Qty	Description	Page No
A3/FLEX					
050	2512936-0100		1	CLEANING CUP	**1-297, 1-299**
Common Parts					
010	2775100-0100		1	INTEGRATED CLEANING UNIT	**1-301**
020	2833350-0100		1	PIPE WORK	**1-309**
030	2539452-0200		1	FLOW SWITCH	**1-311**

Pos	Part No	UN	Qty	Description	Page No

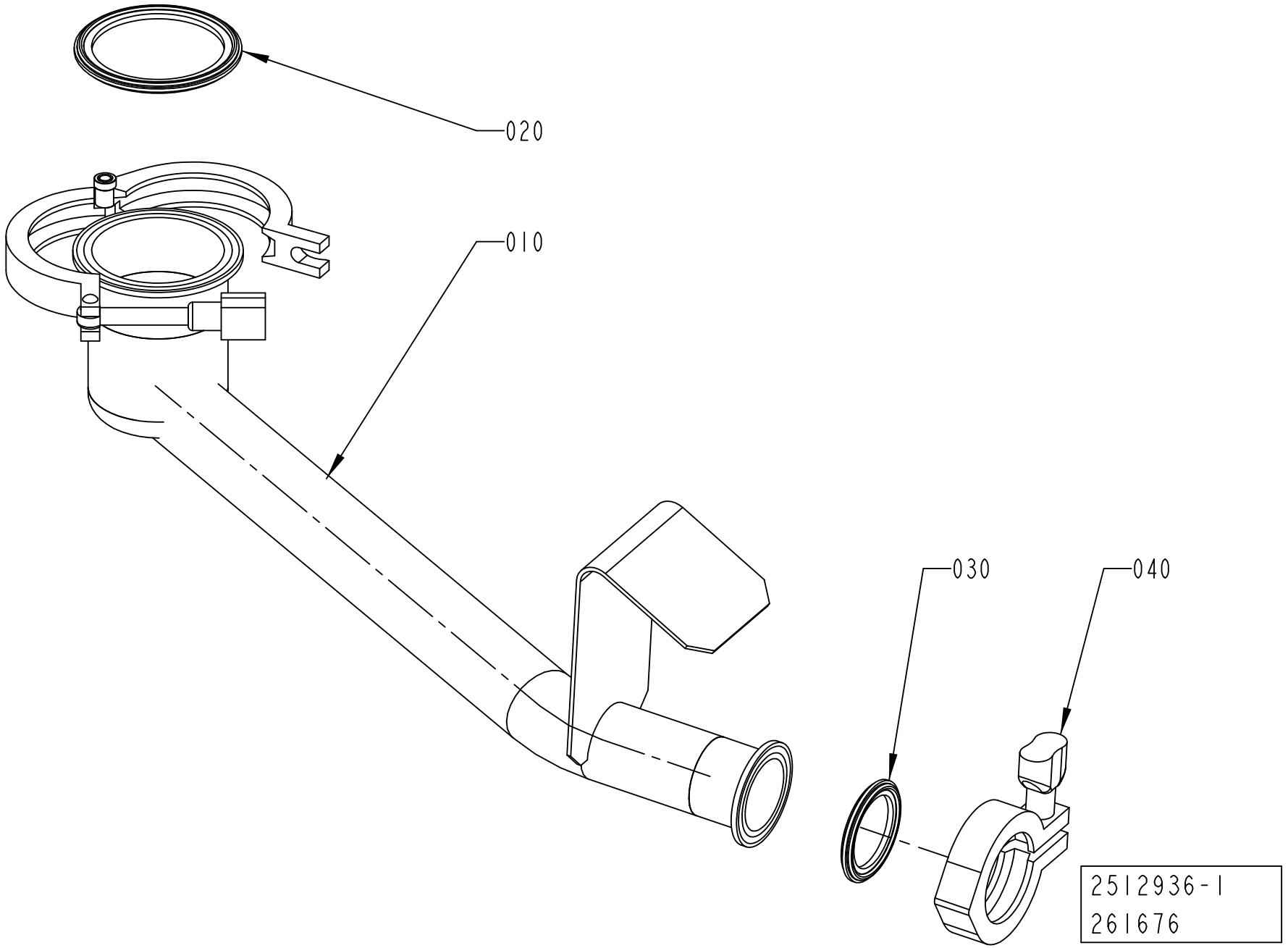
020
010
030
040
2512936-1
261676

ECM: 391278 - 20090403
Group number: 2512936-0100
Assembly Drawing: 2512936-1_1_AB

This list covers pages from 1-296 to 1-299

Pos	Part No	UN	Qty	Description	Page No
TBA 0200M, TBA 0200B, TBA 0200SQ, TBA 0200S, TBA 0250S, TBA 0250B, TBA 0330S, TPA 0330SQ, TPA 0250SQ, TPA 0200SQ, TBA 0250SQ (See drawing on page: 1-298)					
010	2833035-0000		1	CLEANING CUP	
030	342850-0304		2	GASKET 35,4X49,1X5,2 1"1/2 FDA	
TBA 0500S, TPA 1000SQ, TPA 0500SQ, TPA 0750SQ (See drawing on page: 1-296)					
010	2833036-0000		1	CLEANING CUP	
020	342850-0305		1	GASKET 47,8X62,6X5,2 MM 2" FDA 3-A	
030	342850-0304		1	GASKET 35,4X49,1X5,2 1"1/2 FDA	
TBA 0500SQ, TBA 1000B, TBA 1000SQ, TBA 1000S, TBA 1500S, TBA 1890S, TBA 2000S, TBA 1400B (See drawing on page: 1-296)					
010	2832620-0000		1	CLEANING CUP	
020	342850-0306		1	GASKET 60,3X76,1X5,2 MM 2"1/2 FDA 3-A	
030	342850-0304		1	GASKET 35,4X49,1X5,2 1"1/2 FDA	
TGA 1000SQ, TGA 0750SQ, TGA 0500SQ (See drawing on page: 1-296)					
010	2960455-0000		1	CLEANING CUP	
020	342850-0305		1	GASKET 47,8X62,6X5,2 MM 2" FDA 3-A	
030	342850-0304		1	GASKET 35,4X49,1X5,2 1"1/2 FDA	
TGA 1500SQ (See drawing on page: 1-296)					
010	2977498-0000		1	CLEANING CUP	
020	342850-0305		1	GASKET 47,8X62,6X5,2 MM 2" FDA 3-A	
030	342850-0304		1	GASKET 35,4X49,1X5,2 1"1/2 FDA	
Common Parts					
040	342840-0103		1	CLAMPING PIECE DN 1-11/2, GH13LAH112304N	

Pos	Part No	UN	Qty	Description	Page No

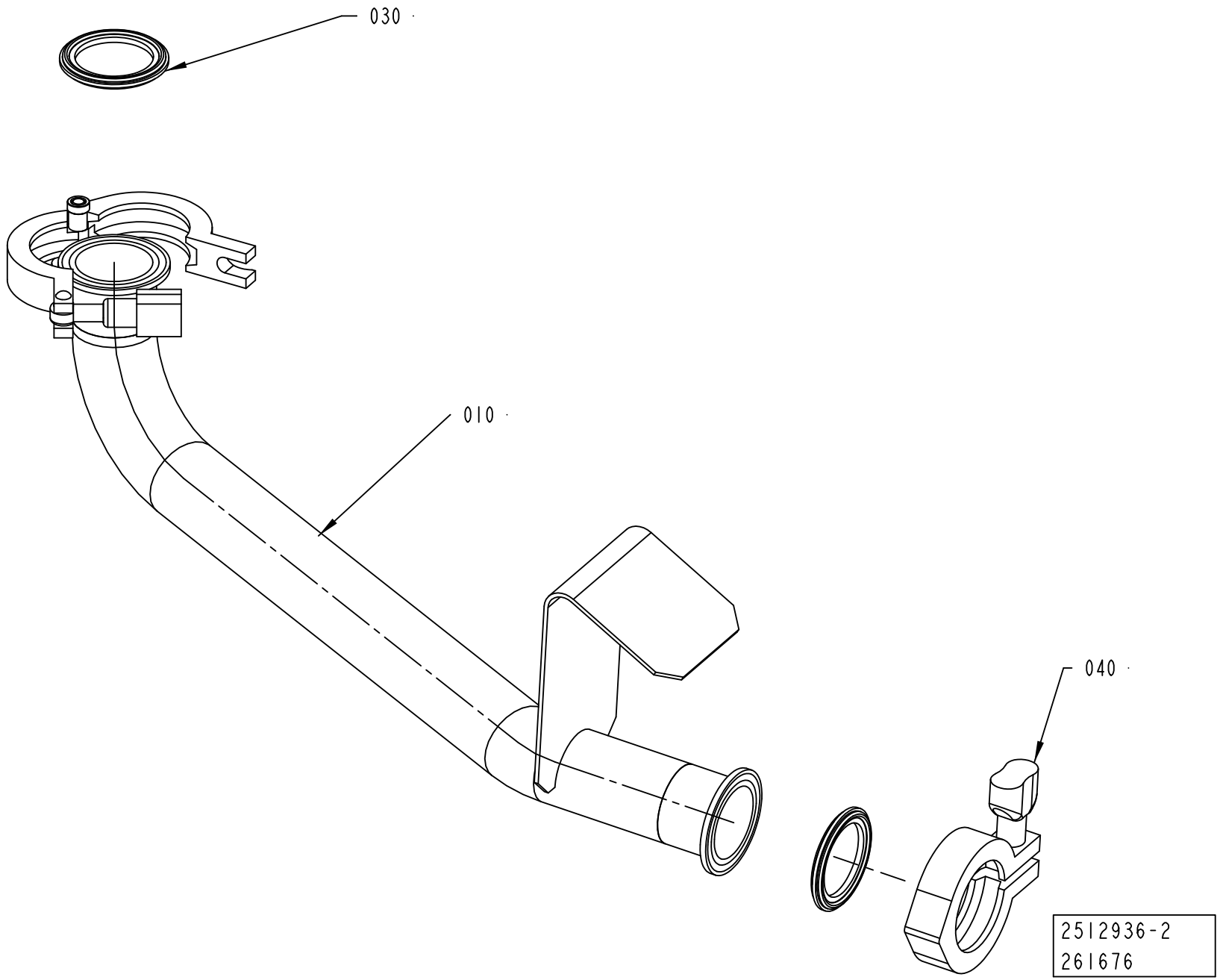
030
010
040
2512936-2
261676

Pos	Part No	UN	Qty	Description	Page No
TBA 0200M, TBA 0200B, TBA 0200SQ, TBA 0200S, TBA 0250S, TBA 0250B, TBA 0330S, TPA 0330SQ, TPA 0250SQ, TPA 0200SQ, TBA 0250SQ (See drawing on page: 1-298)					
010	2833035-0000		1	CLEANING CUP	
030	342850-0304		2	GASKET 35,4X49,1X5,2 1"1/2 FDA	
TBA 0500S, TPA 1000SQ, TPA 0500SQ, TPA 0750SQ (See drawing on page: 1-296)					
010	2833036-0000		1	CLEANING CUP	
020	342850-0305		1	GASKET 47,8X62,6X5,2 MM 2" FDA 3-A	
030	342850-0304		1	GASKET 35,4X49,1X5,2 1"1/2 FDA	
TBA 0500SQ, TBA 1000B, TBA 1000SQ, TBA 1000S, TBA 1500S, TBA 1890S, TBA 2000S, TBA 1400B (See drawing on page: 1-296)					
010	2832620-0000		1	CLEANING CUP	
020	342850-0306		1	GASKET 60,3X76,1X5,2 MM 2"1/2 FDA 3-A	
030	342850-0304		1	GASKET 35,4X49,1X5,2 1"1/2 FDA	
TGA 1000SQ, TGA 0750SQ, TGA 0500SQ (See drawing on page: 1-296)					
010	2960455-0000		1	CLEANING CUP	
020	342850-0305		1	GASKET 47,8X62,6X5,2 MM 2" FDA 3-A	
030	342850-0304		1	GASKET 35,4X49,1X5,2 1"1/2 FDA	
TGA 1500SQ (See drawing on page: 1-296)					
010	2977498-0000		1	CLEANING CUP	
020	342850-0305		1	GASKET 47,8X62,6X5,2 MM 2" FDA 3-A	
030	342850-0304		1	GASKET 35,4X49,1X5,2 1"1/2 FDA	
Common Parts					
040	342840-0103		1	CLAMPING PIECE DN 1-11/2, GH13LAH112304N	

Pos	Part No	UN	Qty	Description	Page No

INTEGRATED CLEANING UNIT

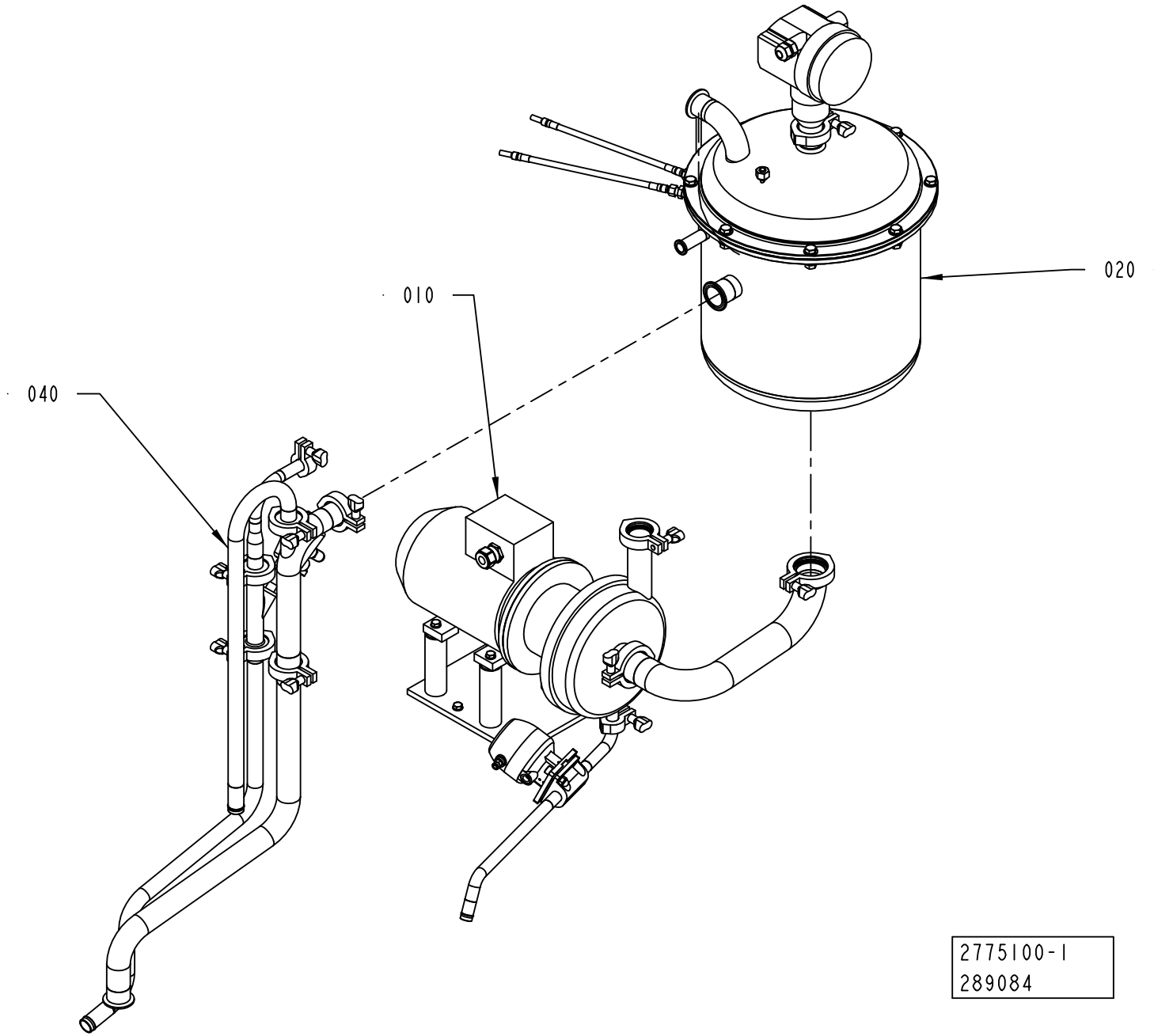

ECM: 290679 - 20070102
Group number: 2775100-0100
Assembly Drawing: 2775100-1_1_AA

Pos	Part No	UN	Qty	Description	Page No
-					
010	2829770-0100		1	CENTRIFUGAL PUMP	**1-303**
020	2837100-0100		1	CLEANING TANK	**1-305**
040	2833354-0100		1	PIPE-LINE	**1-307**

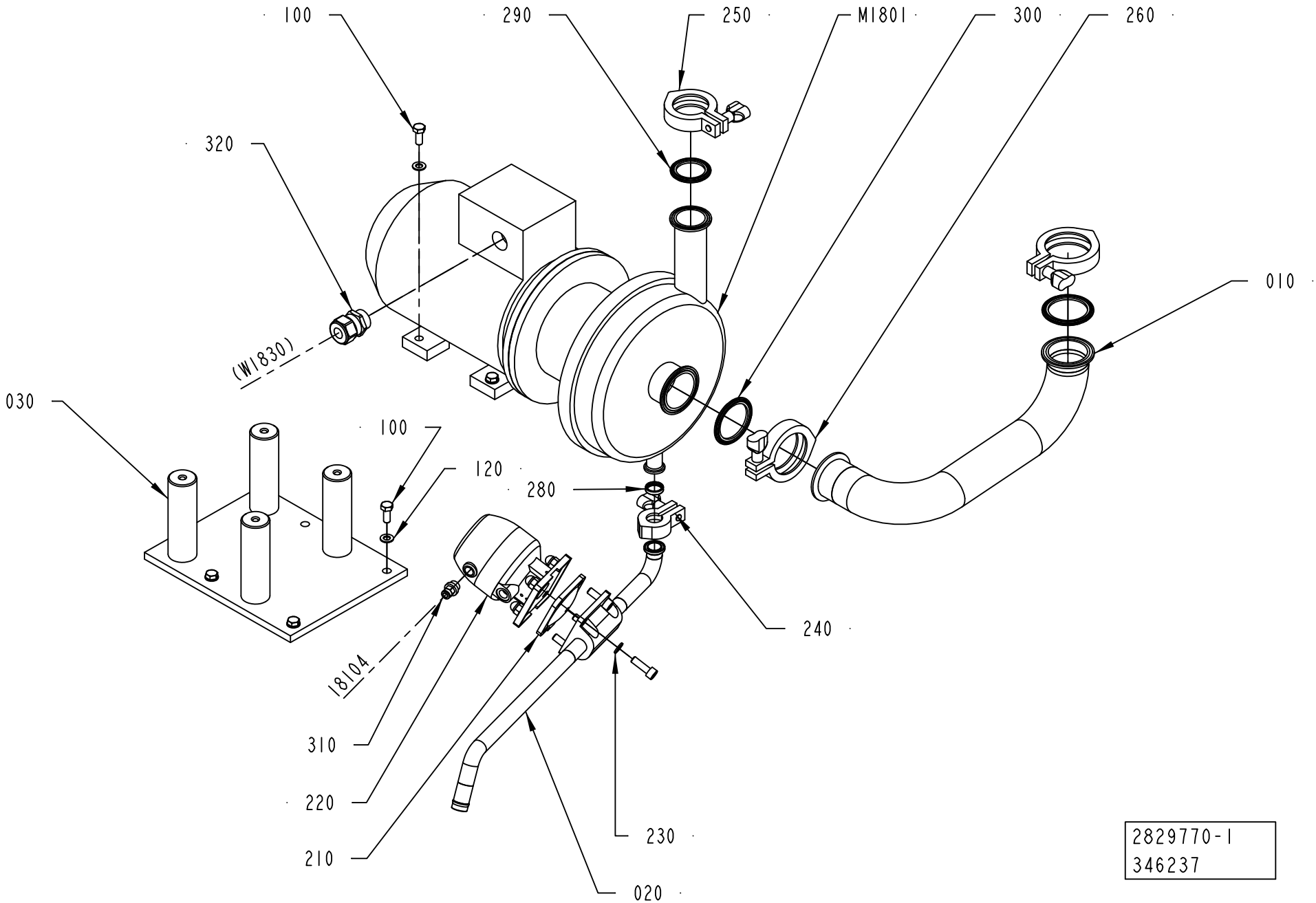
100
290
250
M1801
300
260
320
010
(W1830)
030
100
120
280
240
18104
310
220
210
230
020
2829770-1
346237

ECM: 349311 - 20080702
Group number: 2829770-0100
Assembly Drawing: 2829770-1_1_AD

Pos	Part No	UN	Qty	Description	Page No
A3/FLEX					
020	2833348-0000		1	DRAIN PIPE	
Common Parts					
010	2829769-0000		1	PIPE	
030	2833351-0000		1	SUPPORT	
100	312105-0451		7	SCREW M6S ISO 4017 M8X20 A480	
120	315105-0165		7	WASHER BRB 8,4X16 RFR	
210	342800-1103		1	DIAPHRAGM FDA PTFE/EPDM 5E, SEAT S. 25	
220	342800-1303		1	ACTUATOR, SS, N.O. SEAT S. 25	
230	342800-1503		1	VALVE ASSEMBLING KIT, SEAT S. 25	
240	90600-3559		1	CLAMPING PIECE, 211290	
250	342840-0103		1	CLAMPING PIECE DN 1-11/2, GH13LAH112304N	
260	342840-0105		2	CLAMPING PIECE, GH13LAH2304NO79612011202	
280	90600-3558		1	GASKET 16,2X21,8X4,45 MM 3/4"	
290	342850-0304		1	GASKET 35,4X49,1X5,2 1"1/2 FDA	
300	342850-0305		2	GASKET 47,8X62,6X5,2 MM 2" FDA 3-A	
310	350001-0008		1	PUSH-IN FITTING QS-F-G1/4-6	
320	90458-0440		1	GLAND, EXTENDED WITH INSERT, M25X1,5	
M1801	2851886-0000		1	CENTRIFUGAL PUMP	
	6-9611 92 2454		*1*	*SERVICE KIT SOLIDC-1 EPDM SSS*	

Pos	Part No	UN	Qty	Description	Page No

Machine Type | Group Description | Used-In | Group Number | Page No

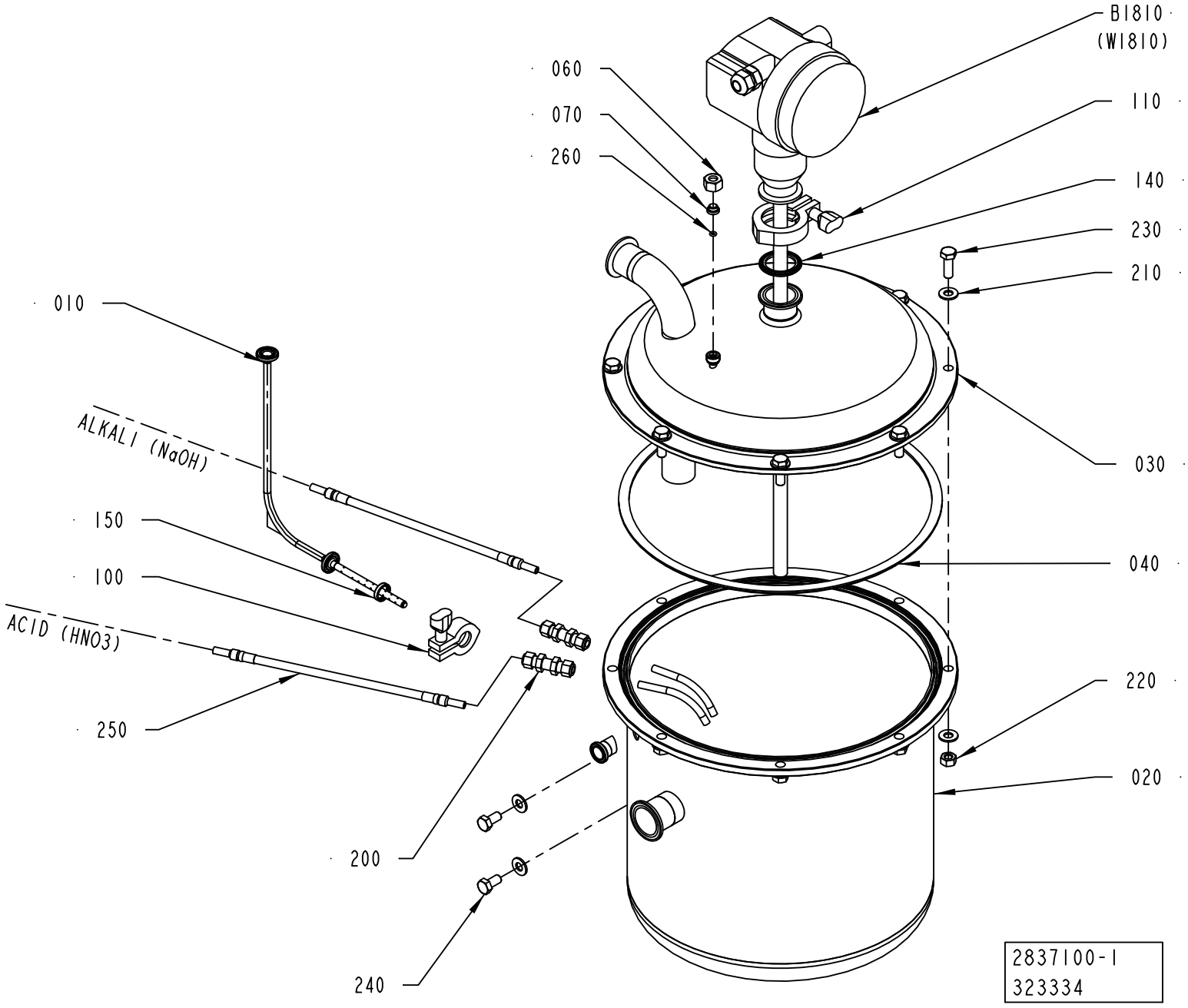
B1810
(W1810)
060
070
260
110
140
230
210
010
ALKALI (NaOH)
150
100
ACID (HNO3)
250
030
040
220
020
200
240
2837100-1
323334

ECM: 324251 - 20080101
Group number: 2837100-0100
Assembly Drawing: 2837100-1_1_AC

Pos	Part No	UN	Qty	Description	Page No
NOHI					
060	2847313-0000		1	NUT	
070	2869175-0000		1	PLUG	
Common Parts					
010	2895158-0000		1	STEAM PIPE	
020	2799899-0000		1	CLEANING TANK	
030	2829764-0000		1	LID	
040	2829766-0000		1	SEALING	
100	90600-3559		1	CLAMPING PIECE, 211290	
110	342840-0103		1	CLAMPING PIECE DN 1-11/2, GH13LAH112304N	
140	342850-0304		1	GASKET 35,4X49,1X5,2 1"1/2 FDA	
150	90600-3558		1	GASKET 16,2X21,8X4,45 MM 3/4"	
200	90030-0485		2	CONN. BULKHEAD SV 8-	
210	315105-0173		18	WASHER BRB 10,5X22 RFR	
220	312605-0320		8	HEXAGON NUT, M6M M10 A280	
230	312105-0495		8	SCREW M6S ISO 4017 M10X30 A480	
240	312105-0491		2	SCREW M6S ISO 4017 M10X20 A480	
250	90459-4169		2	HOSE ASSEMBLY 919-1D-1D-8-8-5C-3800	
260	90600-0495		1	O-RING 4X2 MM	
B1810	90600-0821		1	LEVEL PR.,LEVELFLEX-M FMP41C-AKTJKB11A2Y	

Pos	Part No	UN	Qty	Description	Page No

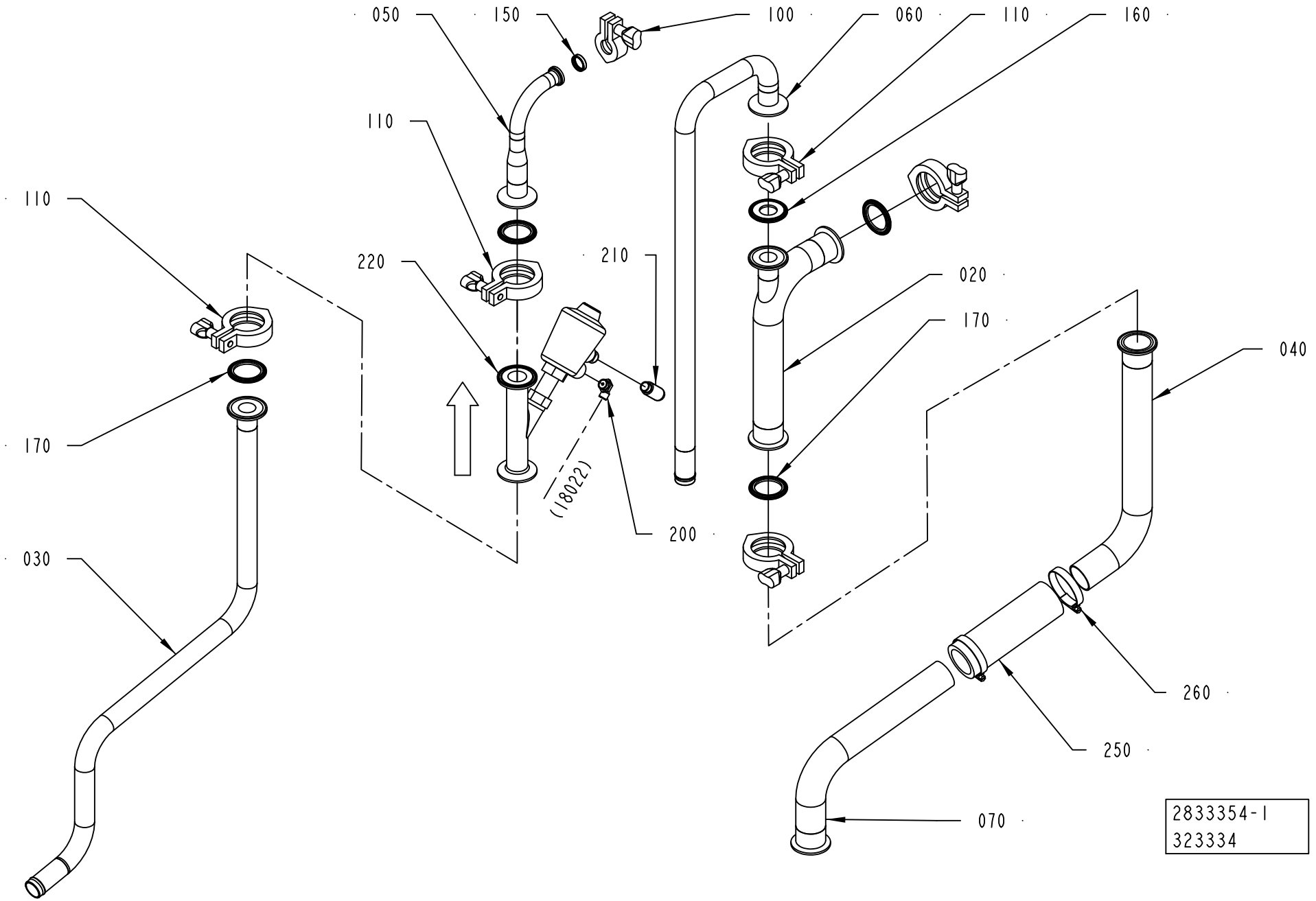
050
150
100
060
110
160
110
110
220
210
020
170
040
170
030
(18022)
200
260
250
070
2833354-1
323334

ECM: 387751 - 20090402
Group number: 2833354-0100
Assembly Drawing: 2833354-1_1_AC

Pos	Part No	UN	Qty	Description	Page No
-					
020	2696005-0000		1	PIPE	
030	2866004-0000		1	PIPE	
040	2890594-0000		1	PIPE	
050	2833345-0000		1	PIPE	
060	2851883-0000		1	PIPE	
070	2890593-0000		1	PIPE	
100	90600-3559		1	CLAMPING PIECE, 211290	
110	342840-0103		5	CLAMPING PIECE DN 1-11/2, GH13LAH112304N	
150	90600-3558		1	GASKET 16,2X21,8X4,45 MM 3/4"	
160	342850-0303		1	GASKET 22,7X49,1X5,2 MM 1" FDA	
170	342850-0304		4	GASKET 35,4X49,1X5,2 1"1/2 FDA	
200	90458-2957		1	ELBOW PIPE JOINT, EXT.THREAD, D=6MM-G1/4	
210	90328-0026		1	SILENCER G1/4"	
220	90459-1241		1	ANGLE SEAT VALVE, TRI-CLAMP, N.C. DN20	
250	90166-0236	MM	150	HOSE, 38/51 REINFORCED RUBBER	
260	342991-0109		2	HOSE CLIP,WORM DRIVE TYPE (48)-50	

Pos	Part No	UN	Qty	Description	Page No

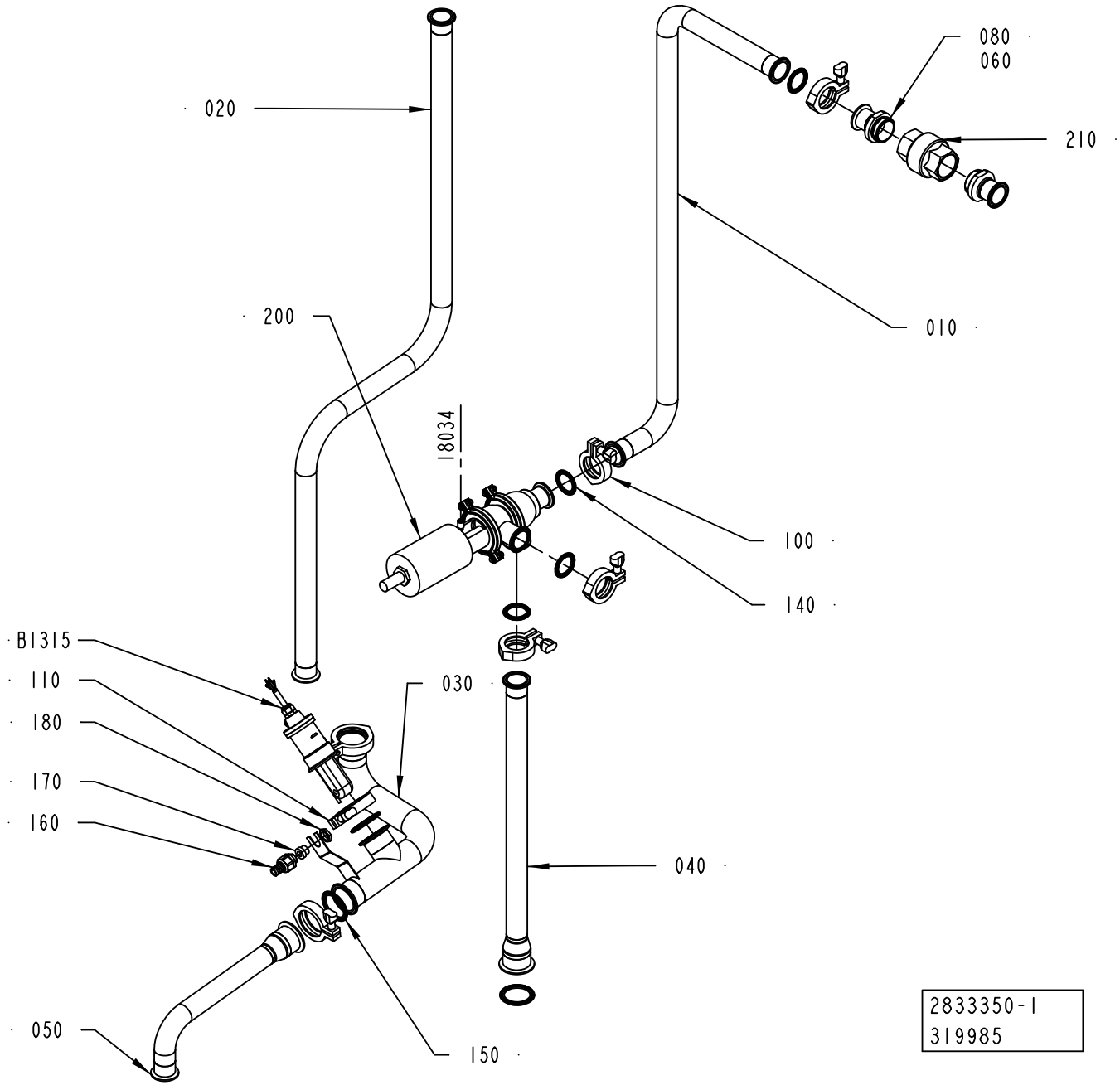
020
080
060
210
010
200
18034
100
140
B1315
110
180
170
160
030
040
050
150
2833350-1
319985

ECM: 387752 - 20090402
Group number: 2833350-0100
Assembly Drawing: 2833350-1_1_AB

Pos	Part No	UN	Qty	Description	Page No
A3/FLEX					
030	2869172-0000		1	PIPE	
040	2869173-0000		1	PIPE	
050	2869171-0000		1	ELBOW PIPE	
Common Parts					
010	2829765-0000		1	PIPE	
020	2829767-0000		1	PIPE	
060	90157-0034	L	1	THREAD SEALANT LOCTITE 572 50 ML	
080	2531083-0000		2	SLEEVE	
100	342840-0103		4	CLAMPING PIECE DN 1-11/2, GH13LAH112304N	
110	342840-0105		3	CLAMPING PIECE, GH13LAH2304NO79612011202	
140	342850-0304		4	GASKET 35,4X49,1X5,2 1"1/2 FDA	
150	342850-0305		3	GASKET 47,8X62,6X5,2 MM 2" FDA 3-A	
160	353243-0003		1	HOSE GLAND W/O INSERT PG11 EXTENDED	
170	353249-0011		1	INSERT, SINGLE HOLE, EK 153/11	
180	90099-0117		1	NUT, PR 18,6 (PG11)	
200	90600-1946		1	VALVE, SEAT, 3A. 9613320304	
210	90230-0045		1	NON-RETURN VALVE 1 1/2", 4968995	
	90230-0309		*1*	*GASKET KIT, 4968995*	
B1315	90600-3924		1	CONDUCTIVITY SENSOR CLS 54-ACS1022	

Pos	Part No	UN	Qty	Description	Page No

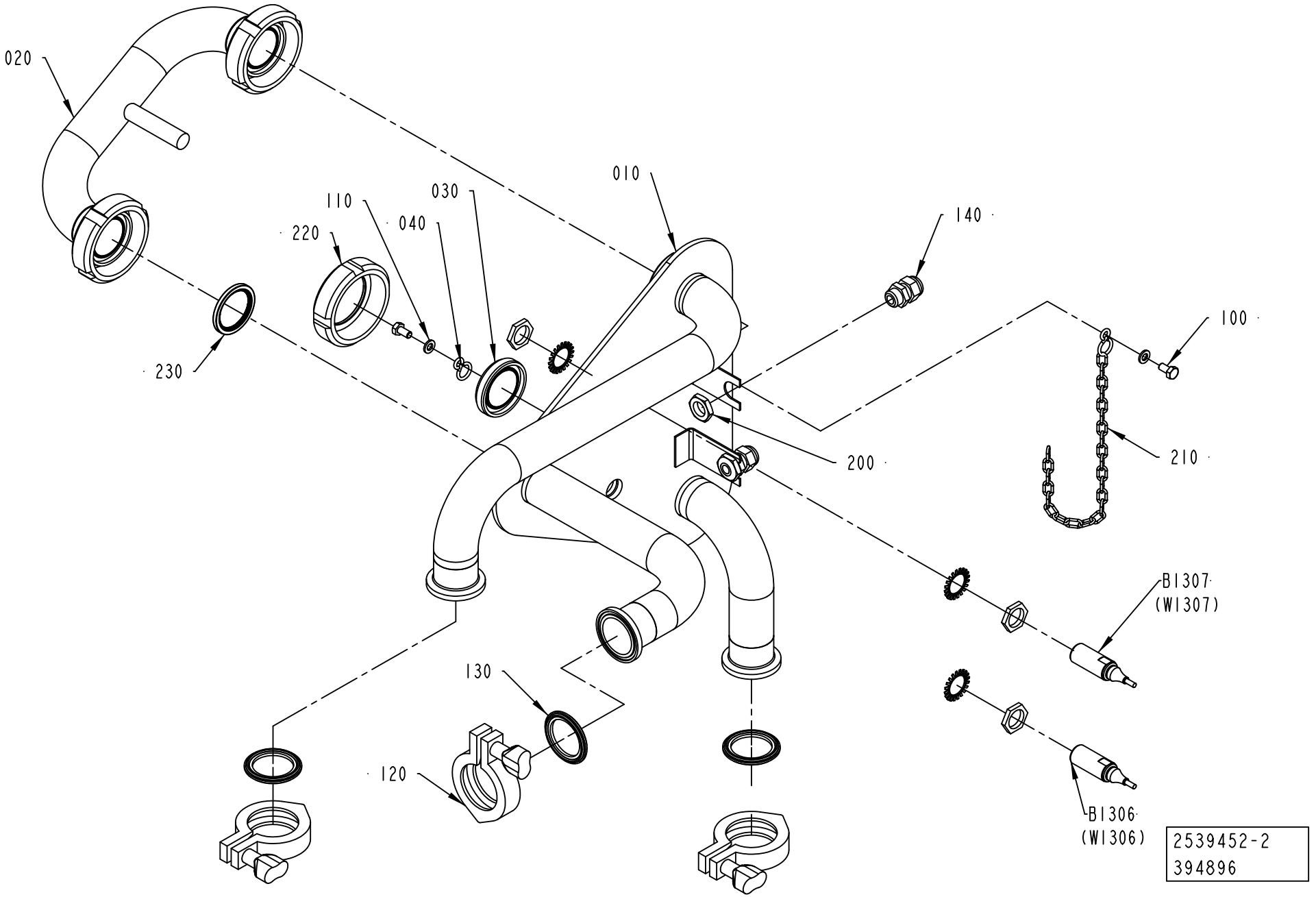
020
010
110
030
040
220
140
100
230
200
210
B1307
(W1307)
130
120
B1306
(W1306)
2539452-2
394896

ECM: 395155 - 20091001
Group number: 2539452-0200
Assembly Drawing: 2539452-2_1_AC

Pos	Part No	UN	Qty	Description	Page No
-					
010	2696028-0000		1	PIPE SUPPORT	
020	2696029-0000		1	CONNECTING PIPE	
030	2525338-0000		1	PLUG	
040	209183-0000		2	RING	
100	312105-0366		2	SCREW M6S ISO 4017 M6X12 A480	
110	315105-0153		2	WASHER BRB 6,4X12 RFR	
120	342840-0103		3	CLAMPING PIECE DN 1-11/2, GH13LAH112304N	
130	342850-0304		3	GASKET 35,4X49,1X5,2 1"1/2 FDA	
140	352103-0101		2	CABLE GLAND, ST 9, PR15,2/PG9	
200	90099-0104		2	NUT, PR 15,2 (PG9)	
210	90155-0008	MM	500	HANGER CHAIN, 18	
220	90217-0206		1	UNION NUT, 1 1/2 APV, 07-01-376/17	
230	90217-0348		3	GASKET 35,4X46,8X4 MM	
B1306	90600-0467		1	INDUCTIVE SWITCH,E2A-M18KS05-WP-B1-TP 6M	
B1307	90600-0467		1	INDUCTIVE SWITCH,E2A-M18KS05-WP-B1-TP 6M	

Pos	Part No	UN	Qty	Description	Page No

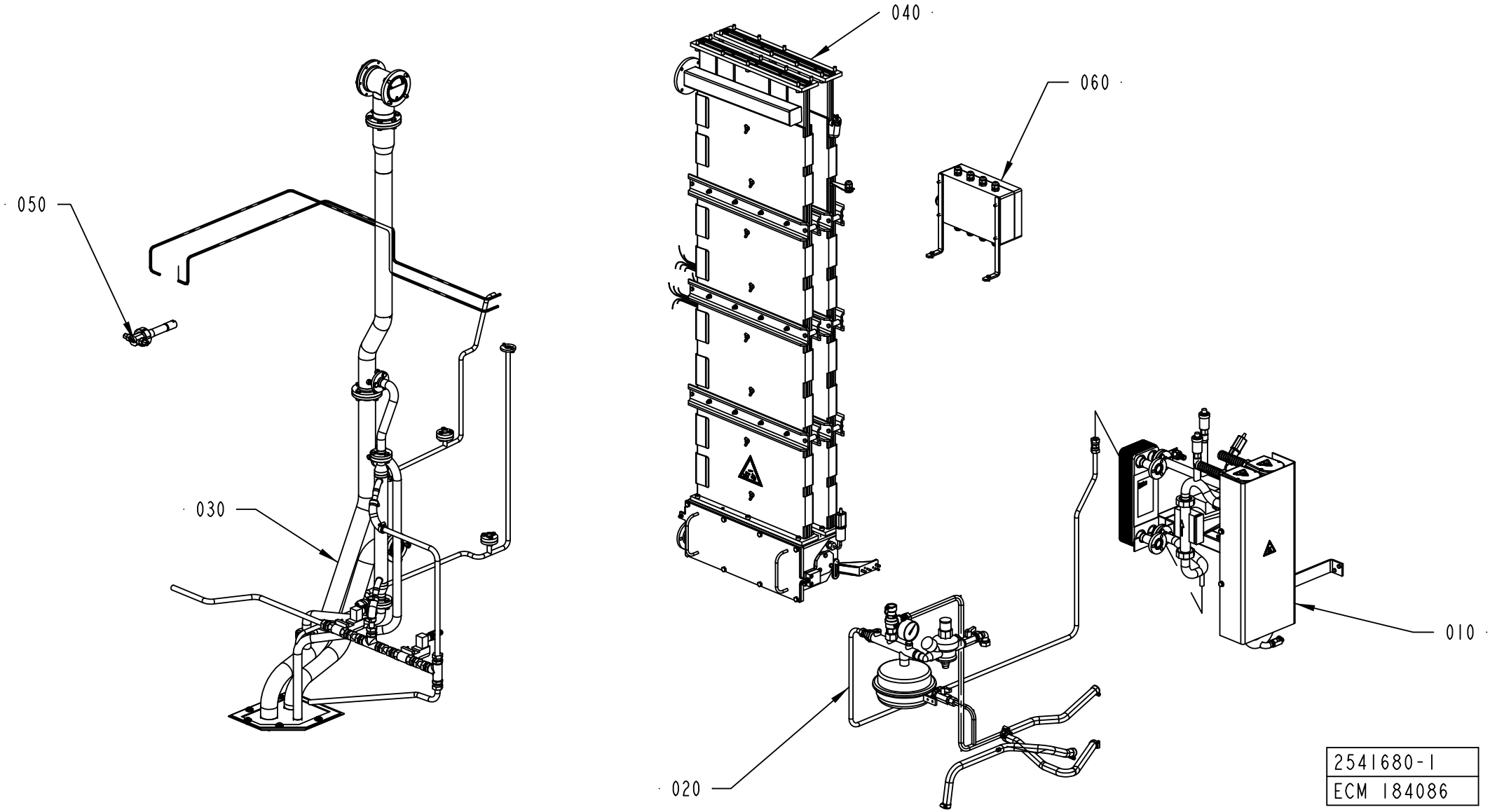
040
060
050
030
010
020
2541680-1
ECM 184086

ECM: 196313 - 20050224
Group number: 2541680-0100
Assembly Drawing: 2541680-1_1_AB

Pos	Part No	UN	Qty	Description	Page No
-					
010	1558495-0100		1	HEATING UNIT	**1-315**
020	2531052-0100		1	PRESSURE UNIT	**1-317**
030	2529484-0100		1	PEROXIDE PIPE	**1-319**
040	2715556-0100		1	BATH	**1-321, 1-323**
050	2547391-0100		1	NOZZLE	**1-325**
060	1532239-0100		1	CONNECTION BOX	**1-327**

Pos	Part No	UN	Qty	Description	Page No

HEATING UNIT

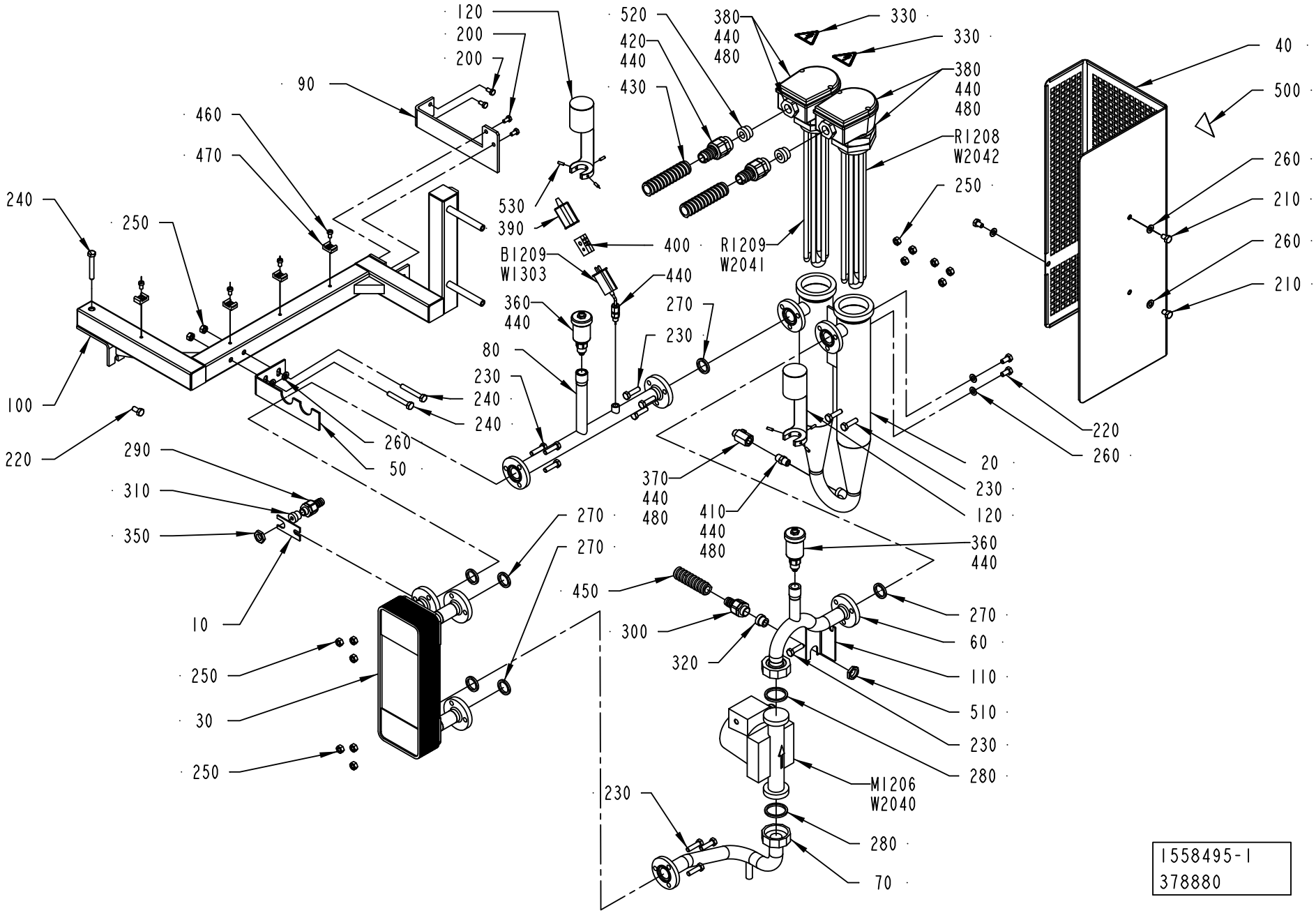

ECM: 379259 - 20090101
Group number: 1558495-0100
Assembly Drawing: 1558495-1_1_AH

Pos	Part No	UN	Qty	Description	Page No
50HZ					
M1206	90321-0134		1	CIRC. PUMP TCB25-6LV.230 HZ 50	
60HZ					
M1206	90321-0135		1	CIRC. PUMP 230V60HZ	
Common Parts					
010	1040970-0000		1	BRACKET	
020	1334507-0000		1	TUBE	
030	1346568-0000		1	HEAT EXCHANGER	
040	2966771-0000		1	PROTECTION	
050	1349608-0000		1	HOLDER	
060	1538049-0000		1	PIPE	
070	1538503-0000		1	PIPE	
080	1538723-0000		1	PIPE	
090	1538724-0000		1	BRACKET	
100	1558496-0000		1	FRAME	
110	1517707-0000		1	BRACKET	
120	2898459-0000		2	PROTECTION	
200	312105-0366		4	SCREW M6S ISO 4017 M6X12 A480	
210	312105-0447		3	SCREW M6S ISO 4017 M8X12 A480	
220	312105-0449		3	SCREW M6S ISO 4017 M8X16 A480	
230	312105-0455		12	SCREW M6S ISO 4017 M8X30 A480	
240	312105-0462		3	SCREW M6S ISO 4014 M8X55 A480	
250	312605-0318		14	HEXAGON NUT, M6M M8 A280	
260	315105-0165		7	WASHER BRB 8,4X16 RFR	
270	315229-0103		6	GASKETS, 23,1X30,1X3,7 MM 1" FDA	
280	315229-0104		2	GASKETS, 35,8X42,8X3,7 MM 1"1/2 FD	
290	353243-0001		1	HOSE GLAND W/O INSERT PG9 EXTENDED	
300	353243-0003		1	HOSE GLAND W/O INSERT PG11 EXTENDED	
310	353249-0008		1	INSERT, SINGLE HOLE, EK 152/7	
320	353249-0011		1	INSERT, SINGLE HOLE, EK 153/11	
330	359705-0015		2	WARNING SIGN ISO, RISK OF ELECTRIC SHOCK	
350	90099-0104		1	NUT, PR 15,2 (PG9)	
360	90600-6015		2	VENTING VALVE, 12003 (+ 11163)	
	315202-0721		*1*	*O-RING 26,64X2,62 MM*	
	90600-6021		*1*	*O-RING 17X2 MM*	
370	90600-0775		1	BALL VALVE G1/4, 406F-1/4"	
380	90206-0326		2	CONNECTION BOX K2 FOR 90206-56 AND -70	
390	90326-0012		1	PROTECTIVE COVER, T31A4618	
400	90326-0020		1	PLUG, FEMALE YELLOW CR-AL	
410	90330-0043		1	NIPPLES, EXT. THREAD. R-207R1/4	
420	90012-0131		2	HOSE GLAND W/O INSERT PG21 NORMAL	
430	90152-0051	M	4	SPIRAL CONDUIT, 25X18, UL 1816	
440	90144-0073		1	TREBOFLON-TAPE W=13MM	
450	90152-0050	M	3.5	SPIRAL CONDUIT, 20X13, UL 1313	
460	312125-0364		4	SCREW ISO 1207 M6X10 A4	
470	352113-0204		4	ANCHOR PLATES FOR STRIPS, TYPE TM3S25-M	
480	90157-0037		1	THREAD SEALANT LOCTITE 542	
500	359705-0007		1	WARNING SIGN ISO, HOT SURFACE	
510	90099-0117		1	NUT, PR 18,6 (PG11)	
520	353249-0013		2	INSERT, SINGLE HOLE, EK 154/13	
530	312318-0291		6	SCREW ISO4029 M4X12 A4	
B1209	90326-0057		1	THERMOCOUPLE, CR-AL	
R1208	90206-0070		1	HEATING ELEMENT 6000W 380/220V	
	90206-0326		*1*	*CONNECTION BOX K2 FOR 90206-56 AND -70*	
	90269-0308		*1*	*GASKET 59X68X3 MM*	
R1209	90206-0070		1	HEATING ELEMENT 6000W 380/220V	
	90206-0326		*1*	*CONNECTION BOX K2 FOR 90206-56 AND -70*	
	90269-0308		*1*	*GASKET 59X68X3 MM*	
W1303	90220-0034	M	5	THERMOCABLE TEX/SITW-20F-KX 2X0,5MM2	
W2040	351150-0412	M	4	CABLE OLFLEX 3X1,5 MM2 LIGHT/GREY	
W2041	351120-0264	M	4	CABLE SILFLEX SIHF 4X1,5 00460153	
W2042	351120-0264	M	4	CABLE SILFLEX SIHF 4X1,5 00460153	

Machine Type | Group Description | Used-In | Group Number | Page No

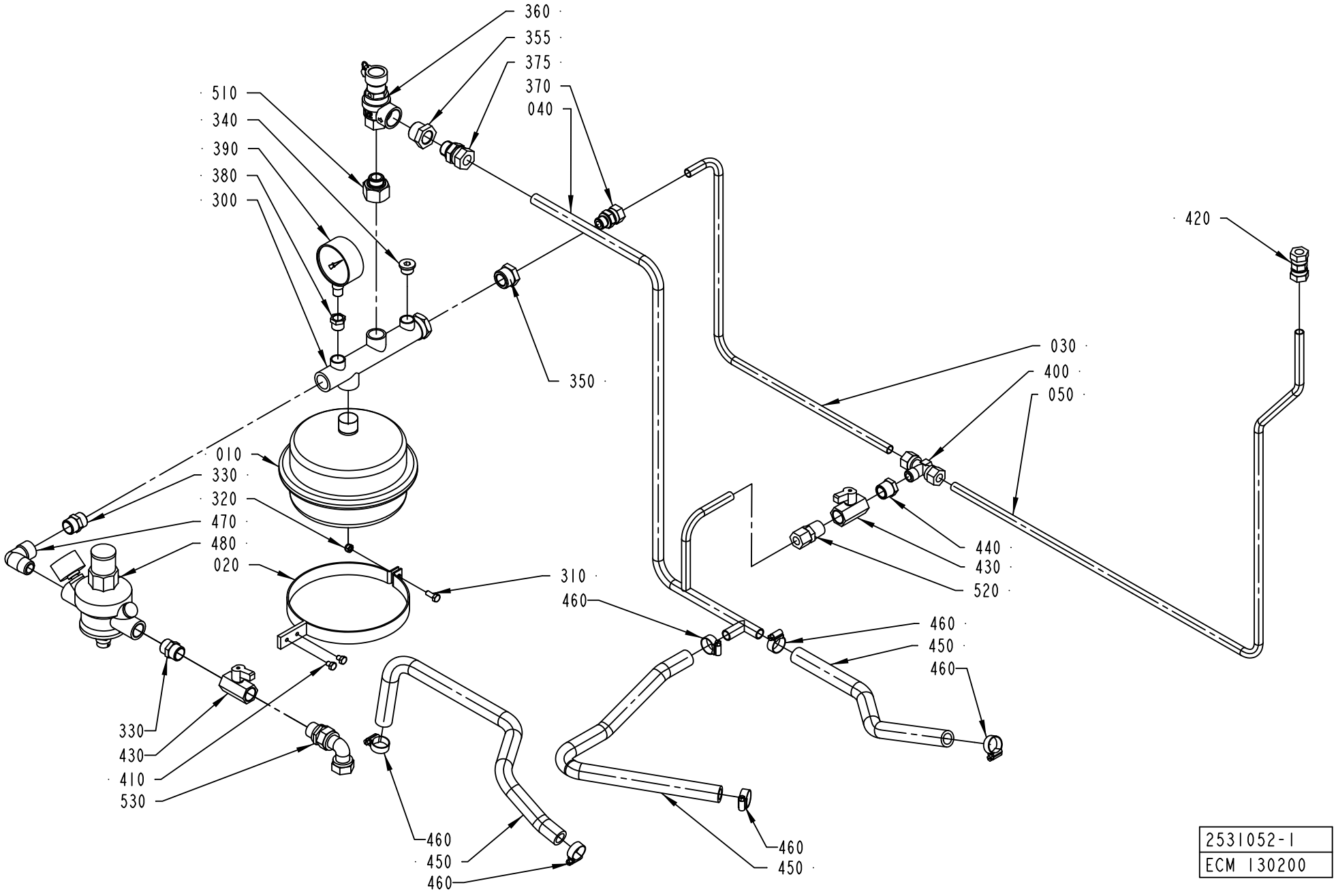
360
355
375
370
040
510
340
390
380
300
420
030
400
050
350
010
330
320
470
480
020
310
460
440
430
520
460
450
460
330
430
410
530
460
450
460
460
450
2531052-1
ECM 130200

ECM: 343475 - 20080402
Group number: 2531052-0100
Assembly Drawing: 2531052-1_1_AB

Pos	Part No	UN	Qty	Description	Page No
-					
010	1511497-0000		1	CONTAINER	
020	1484081-0000		1	BRACKET	
030	1499166-0000		1	PIPE	
040	2611051-0000		1	PIPE	
050	1538502-0000		1	PIPE	
300	90304-0307		1	ATTACHMENT PIPE	
310	312105-0368		1	SCREW M6S ISO 4017 M6X16 A480	
320	312812-0316		1	HEXAGON NUT, NY-LOCK M6 A480	
330	342700-0113		2	NIPPLES,HEXAGON,EXT.G-THREAD G1/2"-G1/2"	
340	90600-1712		1	PLUG, EXT. THREAD HEX. SOCKET 09190017	
350	342701-0209		1	BUSHING,INT./EXT.G-THREAD G3/4"-G3/8"	
355	342206-0109		1	BUSHING, TAPERED, INT/EXT. THR NO. R211	
360	90458-0200		1	PEROX. SAFETY VALVE, NO. 527-430 1/2X3/4	
370	90030-0187		1	CONN. STR. GA-12-G3/8	
375	90030-0188		1	CONN. STR. GA-15-G1/2	
380	342701-0203		1	BUSHING, INT/EXT. G-THREAD NO. 3/8-1/4	
390	90043-0002		1	PRESSURE GAUGE, 2040 D=63 MM	
400	342741-0209		1	CONN. T-PIPE TE-12-R3/8	
410	312105-0362		2	SCREW M6S ISO 4017 M6X8 A480	
420	90030-0106		1	CONN. PIPE G-12	
430	90187-0062		2	BALL VALVE G1/2, NPBR	
440	90330-0048		1	BUSHING, INT/EXT. THR. R1/2-RP3/8	
450	90166-0087	MM	1500	HOSE 15/23 REINF.PVC TRANSP.	
460	342991-0103		6	HOSE CLIP,WORM DRIVE TYPE (19)-23	
470	90140-0012		1	ELBOW, 90 INT/EXT, 2020-1/2-1/2	
480	90458-0201		1	FLUID AUT. FEEDER, ALINOX 1/2 46.04.00	
490	90144-0073	MM	1	TREBOFLON-TAPE W=13MM	
500	90157-0037	ML	1	THREAD SEALANT LOCTITE 542	
510	90458-0751		1	BUSHING,INT./EXT.G-THREAD G3/4"-G1/2"	
520	90030-0180		1	CONN. STR. GE12L1/2NPT71	
530	342738-0221		1	ADJUSTABLE ELBOW CONNECTION,EXT 15-G1/2	

Pos	Part No	UN	Qty	Description	Page No

Machine Type | Group Description | Used-In | Group Number | Page No

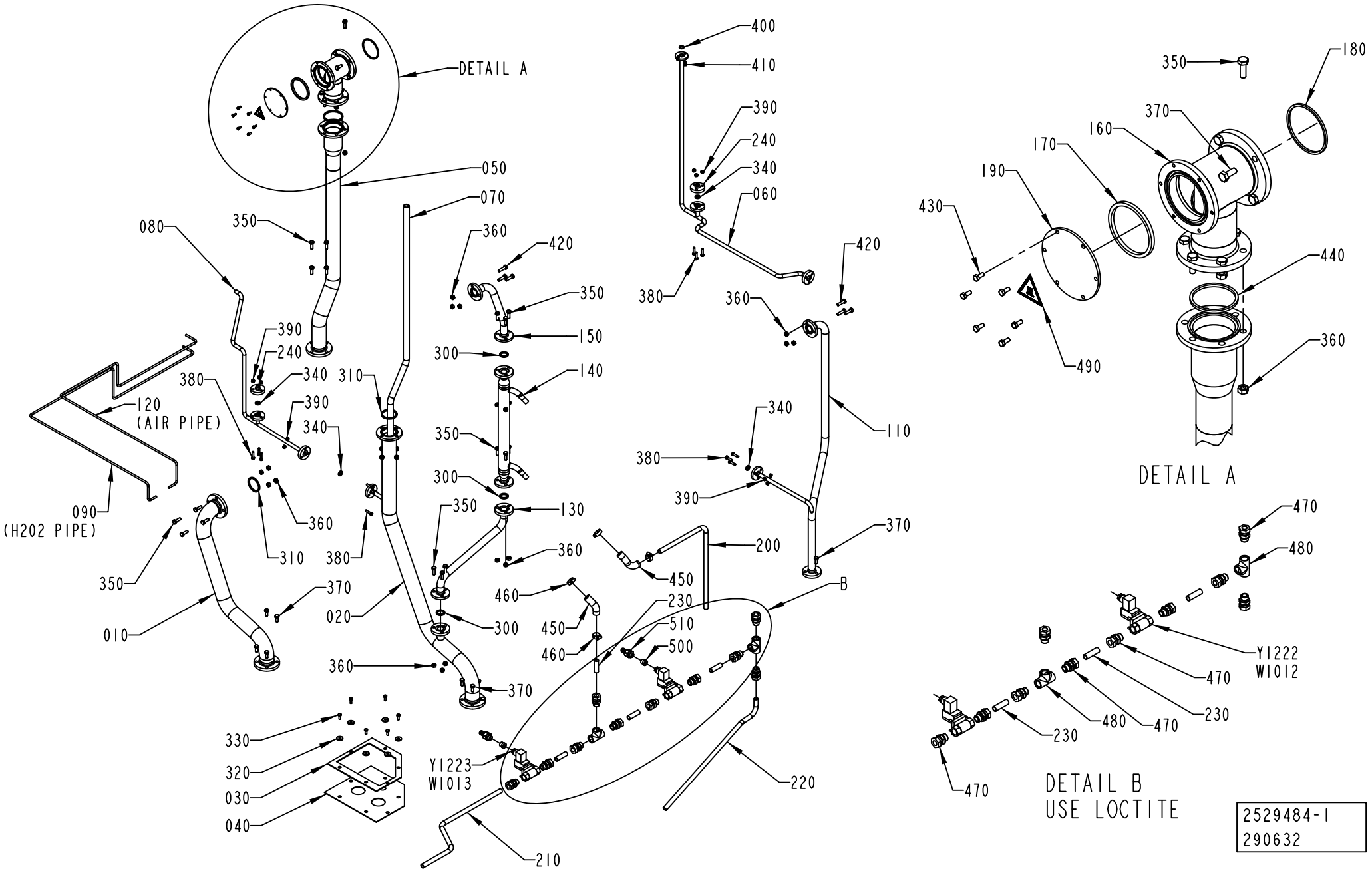

2529484-1
290632

ECM: 387764 - 20090402
Group number: 2529484-0100
Assembly Drawing: 2529484-1_1_AD

Pos	Part No	UN	Qty	Description	Page No
-					
010	1558842-0000		1	PIPE	
020	1558841-0000		1	PIPE	
030	1038688-0000		1	HOLDER	
040	1255551-0000		1	SEAL CLOTH	
050	1499156-0000		1	PIPE	
060	2529073-0000		1	PIPE	
070	1499726-0000		1	PLASTIC HOSE	
080	2529072-0000		1	PIPE	
090	2563279-0000		1	PIPE	
110	1558840-0000		1	PIPE	
120	2563281-0000		1	PIPE	
130	2509654-0000		1	PIPE	
140	2509656-0000		1	PIPE	
150	2509655-0000		1	PIPE	
160	2708584-0000		1	CONNECTION PIPE	
170	436781-0000		1	GASKET	
180	1523808-0000		1	GASKET	
190	1558427-0000		1	LID	
200	2519444-0000		1	TUBE	
210	2519441-0000		1	TUBE	
220	2519443-0000		1	TUBE	
230	2519442-0000		4	TUBE	
240	2564107-0000		2	LID	
300	315229-0103		3	GASKETS, 23,1X30,1X3,7 MM 1" FDA	
310	315229-0105		2	GASKETS, 48,5X55,5X3,7 MM 2" FDA	
320	315125-0153		6	WASHER TBRSB 6,4X22X4 A4	
330	312105-0368		6	SCREW M6S ISO 4017 M6X16 A480	
340	315229-0101		4	GASKETS, 10,4X17,4X3,7 MM 1/2" FDA	
350	312105-0453		23	SCREW M6S ISO 4017 M8X25 A480	
360	312605-0318		29	HEXAGON NUT, M6M M8 A280	
370	312105-0451		15	SCREW M6S ISO 4017 M8X20 A480	
380	312105-0372		12	SCREW M6S ISO 4017 M6X25 A480	
390	312605-0316		12	HEXAGON NUT, M6M M6 A280	
400	927421-0003		1	O-RING 13.3X2.4 SILICONE	
410	312105-0366		2	SCREW M6S ISO 4017 M6X12 A480	
420	312105-0455		6	SCREW M6S ISO 4017 M8X30 A480	
430	312105-0327		6	SCREW M6S ISO 4017 M5X12 A480	
440	315229-0106		1	GASKETS, 61,2X68,2X3,7 MM 2"1/2 FD	
450	90166-0087	MM	330	HOSE 15/23 REINF.PVC TRANSP.	
460	342991-0103		4	HOSE CLIP,WORM DRIVE TYPE (19)-23	
470	90030-0188		10	CONN. STR. GA-15-G1/2	
480	90330-0049		2	T-PIPE, INT. THREAD, R-221R1/2	
490	359705-0007		1	WARNING SIGN ISO, HOT SURFACE	
500	353249-0009		2	INSERT, SINGLE HOLE, EK 152/9	
510	353243-0001		2	HOSE GLAND W/O INSERT PG9 EXTENDED	
520	90157-0037		1	THREAD SEALANT LOCTITE 542	
Y1222	90042-0172		1	SOLENOID VALVE 4023/1005/1032 24VDC	
	90042-0467		*1*	*COIL 24VDC GSR*	
Y1223	90042-0172		1	SOLENOID VALVE 4023/1005/1032 24VDC	
	90042-0467		*1*	*COIL 24VDC GSR*	

Machine Type | Group Description | Used-In | Group Number | Page No

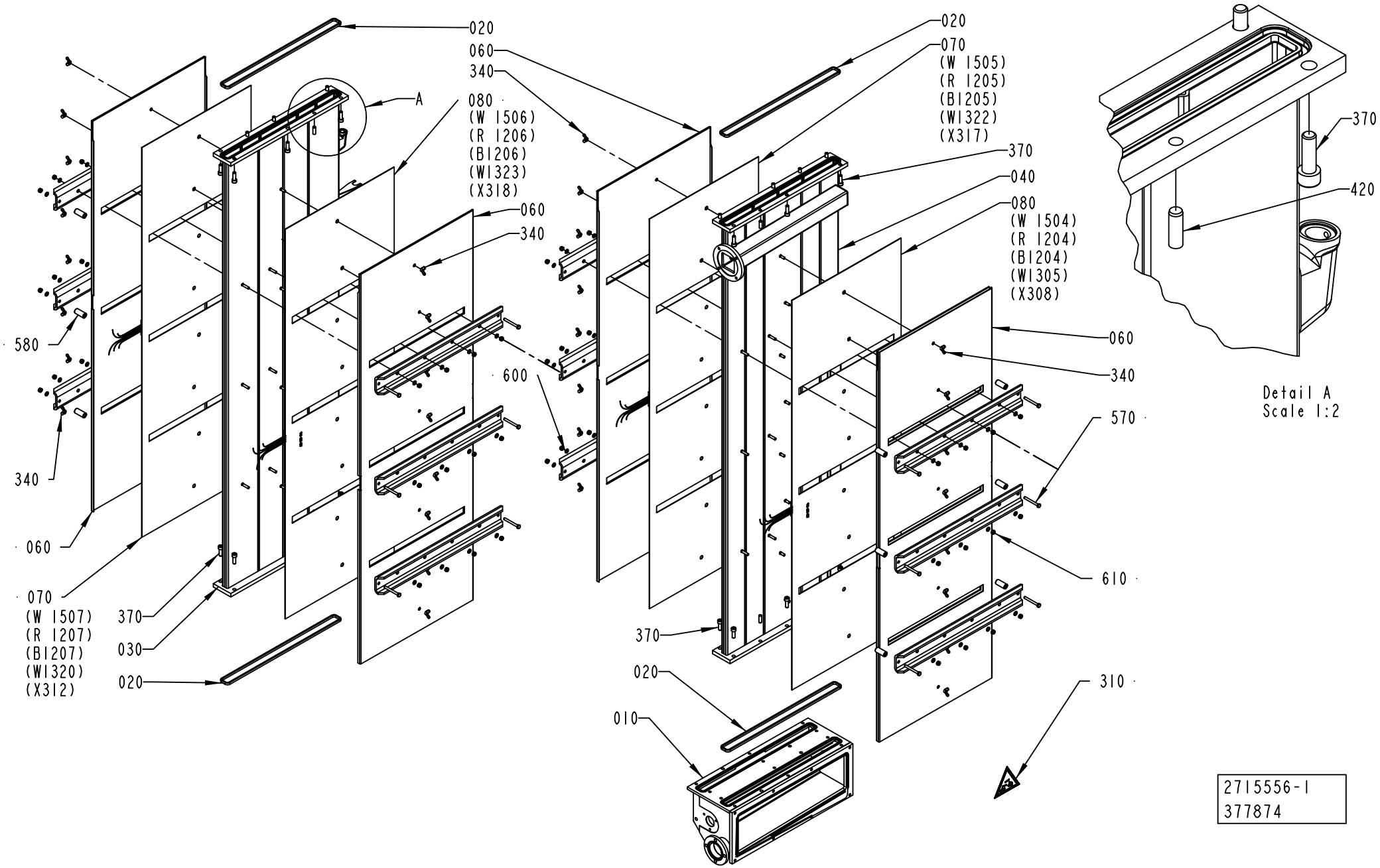
020
060
340
A
080
(W 1506)
(R 1206)
(B1206)
(W1323)
(X318)
060
340
580
600
340
060
070
(W 1507)
(R 1207)
(B1207)
(W1320)
(X312)
370
030
020
020
070
(W 1505)
(R 1205)
(B1205)
(W1322)
(X317)
370
040
080
(W 1504)
(R 1204)
(B1204)
(W1305)
(X308)
060
340
570
610
370
020
010
310
370
420
Detail A
Scale 1:2
2715556-1
377874

ECM: 378696 - 20090401
Group number: 2715556-0100
Assembly Drawing: 2715556-1_1_AD

This list covers pages from 1-320 to 1-323

Pos	Part No	UN	Qty	Description	Page No
LIGHTCAP					
040	2952928-0000		1	PEROXIDE CHAMBER	
140	2709224-0000		2	WHEEL	
150	2833167-0000		1	BENDING ROLLER	
STDA7 CAP, NOMOLDEDCAP					
040	2696095-0000		1	PEROXIDE CHAMBER	
140	1539727-0000		2	WHEEL	
150	2826444-0000		1	BENDING ROLLER	
Common Parts					
010	2778562-0000		1	BOTTOM SECTION	
020	1538735-0000		4	GASKET	
030	2696094-0000		1	CHAMBER	
050	1528639-0000		1	GASKET	
060	2528058-0000		4	COVER	
070	2528056-0000		2	RESISTANCE	
080	2528057-0000		2	RESISTANCE	
090	1523805-0000		2	PIN	
100	1511759-0000		32	SPRING	
110	2528059-0000		2	BRACKET	
120	1539729-0000		2	BRACKET	
130	1538742-0000		1	LID	
160	2940247-0000		1	FLANGE	
165	2940248-0000		1	FLANGE	
180	2508315-0000		1	SCREW	
190	1484428-0000		1	PLASTIC PLUG	
200	2940246-0000		1	SHAFT	
250	315402-0165		1	LOCK WASHER FBB 8,2	
260	315204-0110		1	O-RING 12,1X1,6 MM	
300	927421-0004		1	O-RING 15.3X2.4 SILICONE	
310	359705-0004		1	WARNING SIGN ISO, DANGEROUS CHEMICALS	
320	352103-0101		1	CABLE GLAND, ST 9, PR15,2/PG9	
330	315237-0110		1	WASHER,PL.RND.AL.13,5/18,H=1,5	
340	312715-0116		32	WING NUT DIN 315 A2 MVM-K M6	
350	312605-0316		14	HEXAGON NUT, M6M M6 A280	
370	312115-0453		24	SCREW ISO4762 M8X25 A4 80	
380	312105-0370		8	SCREW M6S ISO 4017 M6X20 A480	
390	312115-0329		4	SCREW ISO4762 M5X16 A4 80	
400	312105-0449		4	SCREW M6S ISO 4017 M8X16 A480	
410	312105-0453		1	SCREW M6S ISO 4017 M8X25 A480	
420	311103-1403		8	PARALLEL PIN ISO 2338 8M6X24 A1	
430	311103-0270		4	PARALLEL PIN ISO 2338 4M6X16 A1	
440	312105-0451		4	SCREW M6S ISO 4017 M8X20 A480	
450	90144-0073	MM	1	TREBOFLON-TAPE W=13MM	
460	90326-0053		1	THERMOCOUPLE, 12826-35	
470	90326-0020		1	PLUG, FEMALE YELLOW CR-AL	
480	90326-0012		1	PROTECTIVE COVER, T31A4618	
490	315205-0802		2	O-RING 41,0X1,78 MM	
500	90240-0146		2	FLANGE BUSHING, 15X21X20 MM	
510	90099-0104		1	NUT, PR 15,2 (PG9)	
520	90044-0084		2	LIMIT SW. 14 CE1-4	
530	567070-0012		1	ELECTRODE	
540	312605-0312		2	HEXAGON NUT, M6M M4 A280	
550	315105-0136		3	WASHER BRB 4,3X8 RFR	
560	312115-0370		4	SCREW ISO4762 M6X20 A4 80	
570	312105-0381		12	SCREW M6S ISO 4014 M6X55 A480	
580	2685380-0000		12	SPACER	
590	2696097-0000		12	PLATE	
600	315105-0153		60	WASHER BRB 6,4X12 RFR	
610	312812-0316		48	HEXAGON NUT, NY-LOCK M6 A480	

Machine Type	Group Description	Used-In	Group Number	Page No

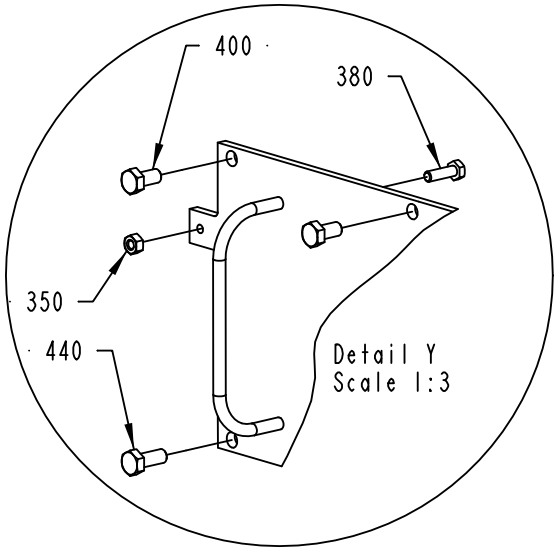

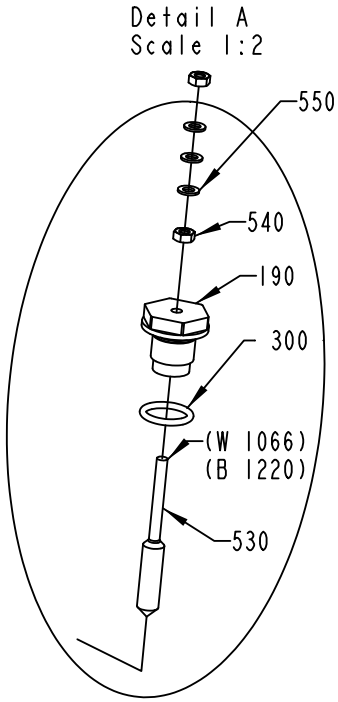

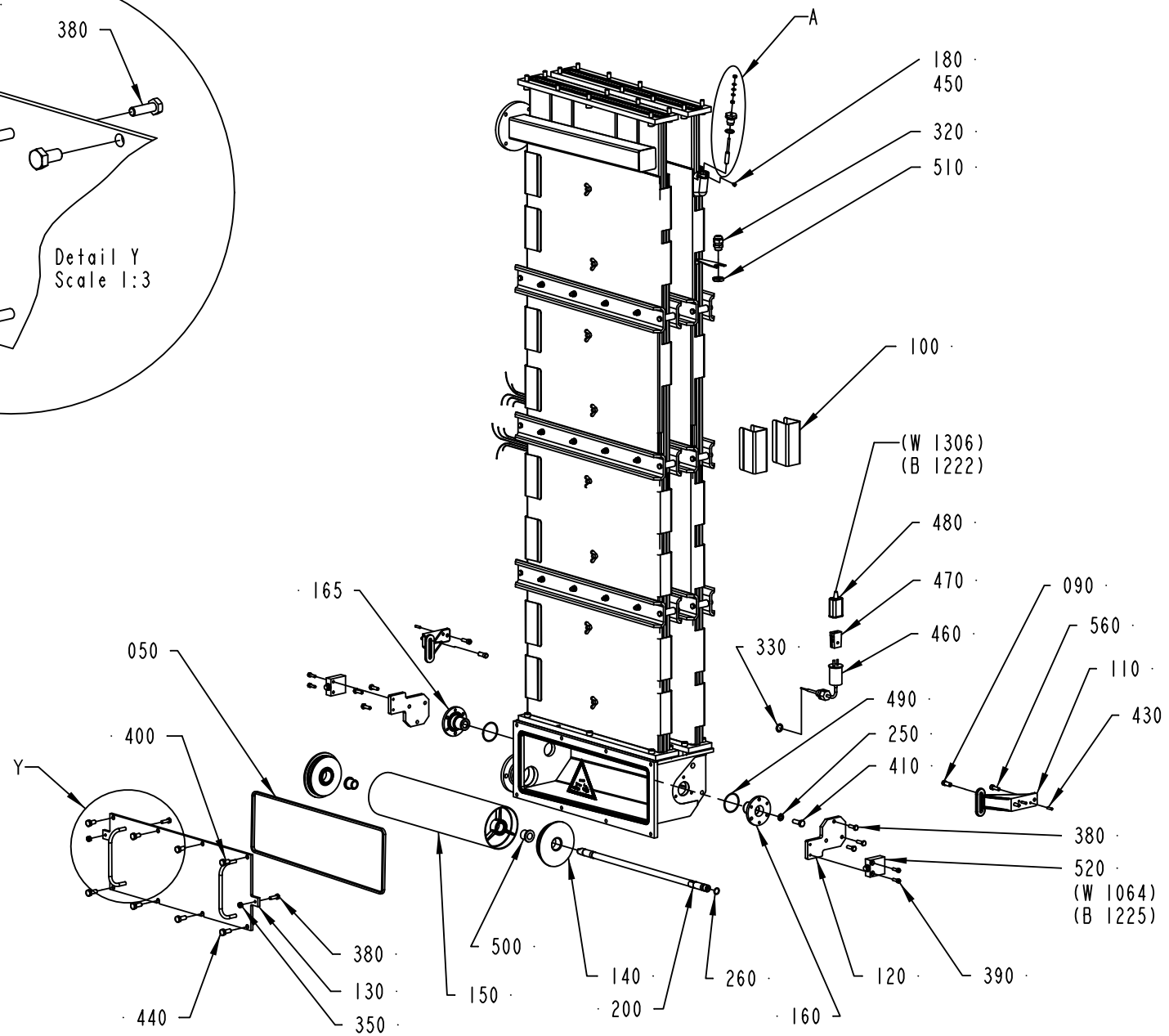

2715556-1
377874

ECM: 378696 - 20090401
Group number: 2715556-0100
Assembly Drawing: 2715556-1_2_AD

This list covers pages from 1-320 to 1-323

Pos	Part No	UN	Qty	Description	Page No
LIGHTCAP					
040	2952928-0000		1	PEROXIDE CHAMBER	
140	2709224-0000		2	WHEEL	
150	2833167-0000		1	BENDING ROLLER	
STDA7 CAP, NOMOLDEDCAP					
040	2696095-0000		1	PEROXIDE CHAMBER	
140	1539727-0000		2	WHEEL	
150	2826444-0000		1	BENDING ROLLER	
Common Parts					
010	2778562-0000		1	BOTTOM SECTION	
020	1538735-0000		4	GASKET	
030	2696094-0000		1	CHAMBER	
050	1528639-0000		1	GASKET	
060	2528058-0000		4	COVER	
070	2528056-0000		2	RESISTANCE	
080	2528057-0000		2	RESISTANCE	
090	1523805-0000		2	PIN	
100	1511759-0000		32	SPRING	
110	2528059-0000		2	BRACKET	
120	1539729-0000		2	BRACKET	
130	1538742-0000		1	LID	
160	2940247-0000		1	FLANGE	
165	2940248-0000		1	FLANGE	
180	2508315-0000		1	SCREW	
190	1484428-0000		1	PLASTIC PLUG	
200	2940246-0000		1	SHAFT	
250	315402-0165		1	LOCK WASHER FBB 8,2	
260	315204-0110		1	O-RING 12,1X1,6 MM	
300	927421-0004		1	O-RING 15.3X2.4 SILICONE	
310	359705-0004		1	WARNING SIGN ISO, DANGEROUS CHEMICALS	
320	352103-0101		1	CABLE GLAND, ST 9, PR15,2/PG9	
330	315237-0110		1	WASHER,PL.RND.AL.13,5/18,H=1,5	
340	312715-0116		32	WING NUT DIN 315 A2 MVM-K M6	
350	312605-0316		14	HEXAGON NUT, M6M M6 A280	
370	312115-0453		24	SCREW ISO4762 M8X25 A4 80	
380	312105-0370		8	SCREW M6S ISO 4017 M6X20 A480	
390	312115-0329		4	SCREW ISO4762 M5X16 A4 80	
400	312105-0449		4	SCREW M6S ISO 4017 M8X16 A480	
410	312105-0453		1	SCREW M6S ISO 4017 M8X25 A480	
420	311103-1403		8	PARALLEL PIN ISO 2338 8M6X24 A1	
430	311103-0270		4	PARALLEL PIN ISO 2338 4M6X16 A1	
440	312105-0451		4	SCREW M6S ISO 4017 M8X20 A480	
450	90144-0073	MM	1	TREBOFLON-TAPE W=13MM	
460	90326-0053		1	THERMOCOUPLE, 12826-35	
470	90326-0020		1	PLUG, FEMALE YELLOW CR-AL	
480	90326-0012		1	PROTECTIVE COVER, T31A4618	
490	315205-0802		2	O-RING 41,0X1,78 MM	
500	90240-0146		2	FLANGE BUSHING, 15X21X20 MM	
510	90099-0104		1	NUT, PR 15,2 (PG9)	
520	90044-0084		2	LIMIT SW. 14 CE1-4	
530	567070-0012		1	ELECTRODE	
540	312605-0312		2	HEXAGON NUT, M6M M4 A280	
550	315105-0136		3	WASHER BRB 4,3X8 RFR	
560	312115-0370		4	SCREW ISO4762 M6X20 A4 80	
570	312105-0381		12	SCREW M6S ISO 4014 M6X55 A480	
580	2685380-0000		12	SPACER	
590	2696097-0000		12	PLATE	
600	315105-0153		60	WASHER BRB 6,4X12 RFR	
610	312812-0316		48	HEXAGON NUT, NY-LOCK M6 A480	

Machine Type	Group Description	Used-In	Group Number	Page No

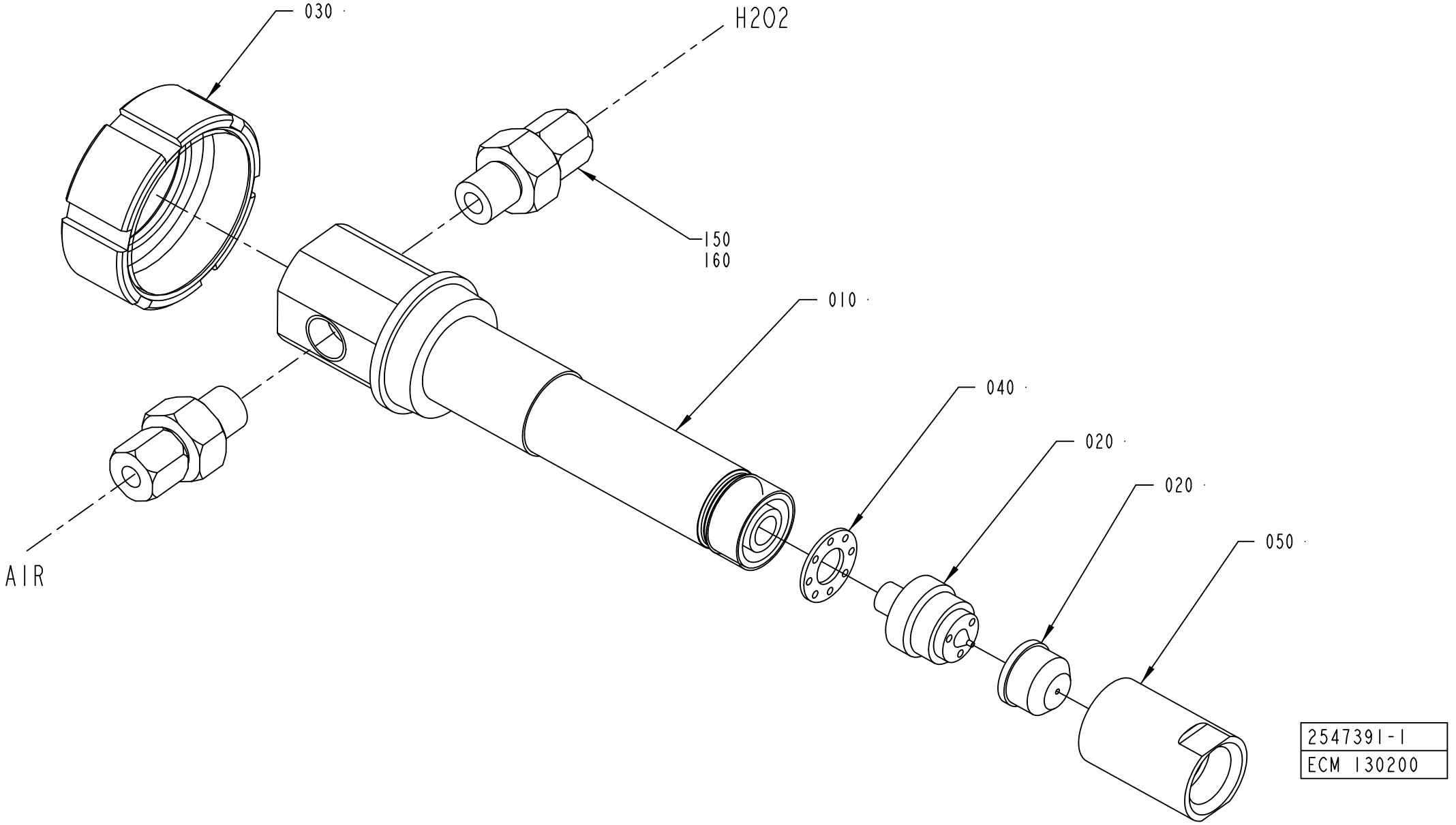
030
H2O2
150
160
010
040
020
020
050
AIR
2547391-1
ECM 130200

ECM: 344003 - 20080402
Group number: 2547391-0100
Assembly Drawing: 2547391-1_1_AB

Pos	Part No	UN	Qty	Description	Page No
-					
010	2563760-0000		1	EXTENSION	
020	2563759-0000		1	SPRAY SYSTEM	
030	1512405-0000		1	NUT	
040	2563762-0000		1	SPACER	
050	2563761-0000		1	NUT	
150	90030-0202		2	CONN. STR., 6-G1/4, EXT. THREAD	
160	90144-0007		1	TAPE	

Pos	Part No	UN	Qty	Description	Page No

CONNECTION BOX

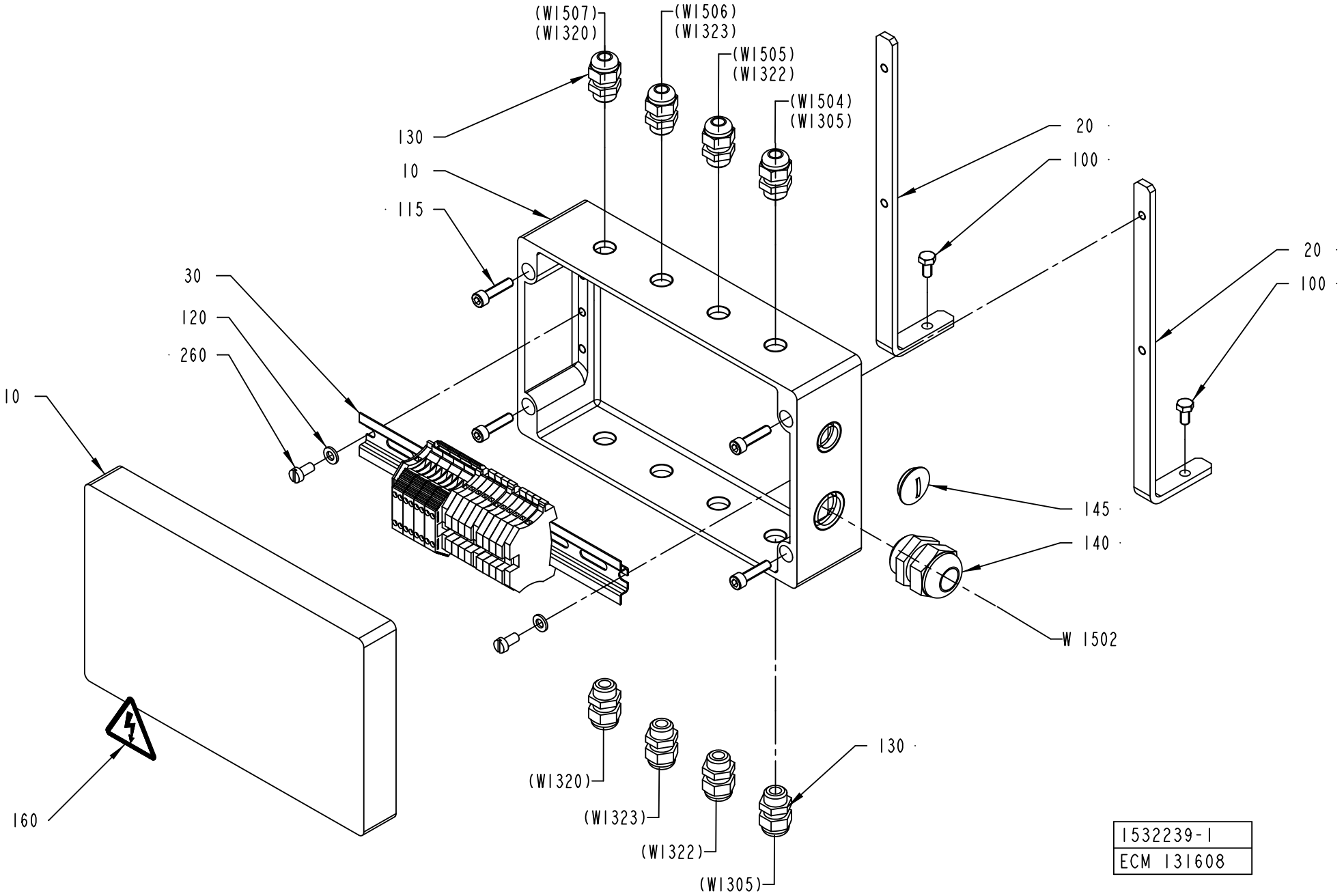

ECM: 301746 - 20070402
Group number: 1532239-0100
Assembly Drawing: 1532239-1_1_AB

Pos	Part No	UN	Qty	Description	Page No
-					
010	1532236-0000		1	CONNECTION BOX	
020	1532240-0000		2	BRACKET	
030	1532238-0100		1	TERMINAL BLOCK	**1-329**
100	312105-0366		2	SCREW M6S ISO 4017 M6X12 A480	
115	312115-0372		4	SCREW ISO4762 M6X25 A4 80	
120	315105-0153		2	WASHER BRB 6,4X12 RFR	
130	352103-0101		8	CABLE GLAND, ST 9, PR15,2/PG9	
140	352103-0115		1	CABLE GLAND, STR 21, PR28,3/PG21	
145	90002-0004		1	BLANK-OFF PLUG, PR 22,5 SKINDICHT-BLK16	
160	359705-0015		1	WARNING SIGN ISO, RISK OF ELECTRIC SHOCK	
260	312125-0366		2	SCREW ISO 1207 M6X12 A4	
W1502	351150-0196	M	4.5	CABLE OLFLEX 7X4 MM2 LIGHT/GREY	

Pos	Part No	UN	Qty	Description	Page No

TERMINAL BLOCK

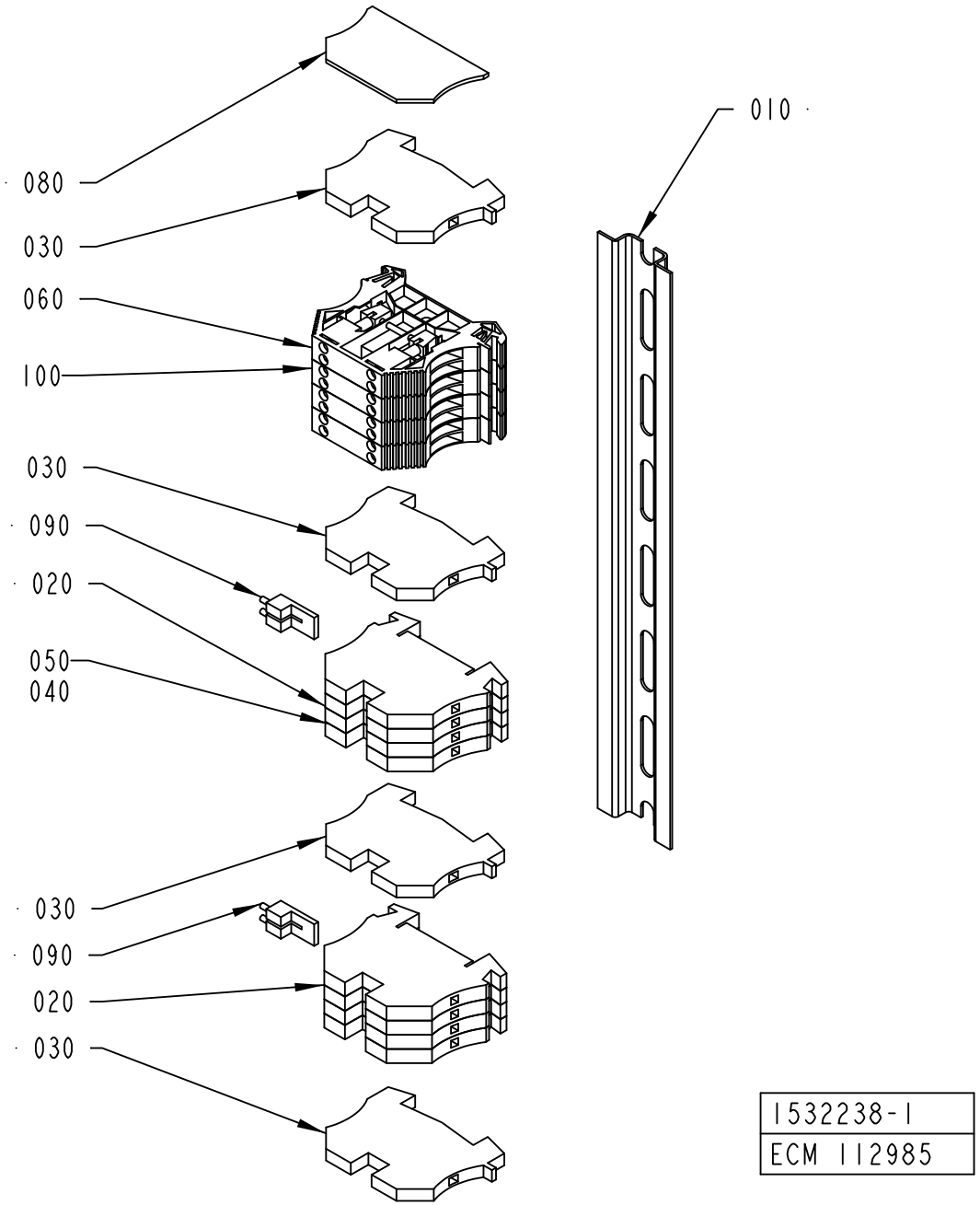

ECM: 342879 - 20080402
Group number: 1532238-0100
Assembly Drawing: 1532238-1_1_AA

Pos	Part No	UN	Qty	Description	Page No
-					
010	1532237-0000		1	RAIL	
020	353021-0213		8	FEED THROUGH TERMINAL, 10201.0	
030	353024-0204		4	EARTH TERMINAL WPE 2,5	
040	359011-0834		1	SET OF SIGNS 6-GW(EARTH)	
050	359011-0821		1	SET OF SIGNS 6-FW 1-50	
060	90459-1742		4	FEED THROUGH TERMINAL, 1024100	
080	353032-0004		1	END PLATE WAP 2,5-10 BEIGE	
090	353034-0030		1	BRIDGE CONNECTOR WQV 2,5/10, 10544.6	
100	359011-0823		1	SET OF SIGNS 6-FW 101-150	
110	359011-0832		1	SET OF SIGNS 6-GW (+)	
120	359011-0833		1	SET OF SIGNS 6-GW (-)	

Pos	Part No	UN	Qty	Description	Page No

FRAME SECTION,UPPER

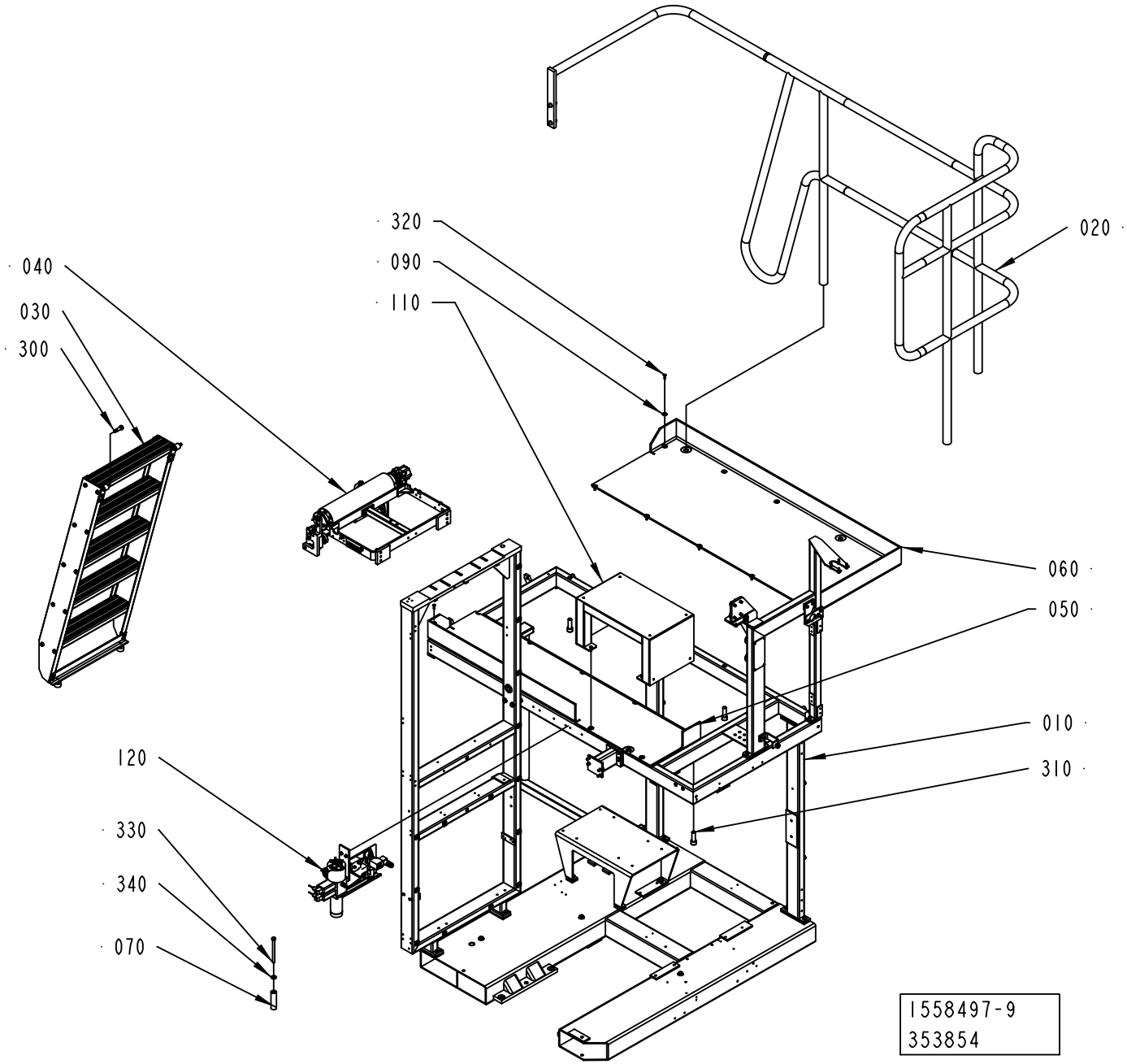

ECM: 367908 - 20090101
Group number: 1558497-0200
Assembly Drawing: 1558497-9_1_AA

Pos	Part No	UN	Qty	Description	Page No
-					
010	1549980-0200		1	FRAME	**1-333, 1-335**
020	2529991-0100		1	RAILING	**1-337**
030	1095862-0100		1	LADDER	**1-339**
040	2552125-0100		1	BENDING ROLLER	**1-341**
050	1558438-0000		1	CHECKER PLATE	
060	1558439-0000		1	CHECKER PLATE	
070	1511504-0000		3	SPACER	
090	2541673-0000		13	WASHER	
110	2530188-0100		1	STEP	**1-349**
120	2529485-0200		1	SPRAY SYSTEM	**1-351**
300	312180-0534		2	SCREW ISO7379 H12X25	
310	312115-0630		3	SCREW ISO4762 M16X50 A4 80	
320	312156-0370		13	SCREW EN 10642 MF6S M6X20 A470	
330	312105-0517		4	SCREW M6S ISO 4014 M10X130 A480	
340	315115-0173		4	WASHER PLAIN, TBRB 10,5/22 H=4	

Pos	Part No	UN	Qty	Description	Page No

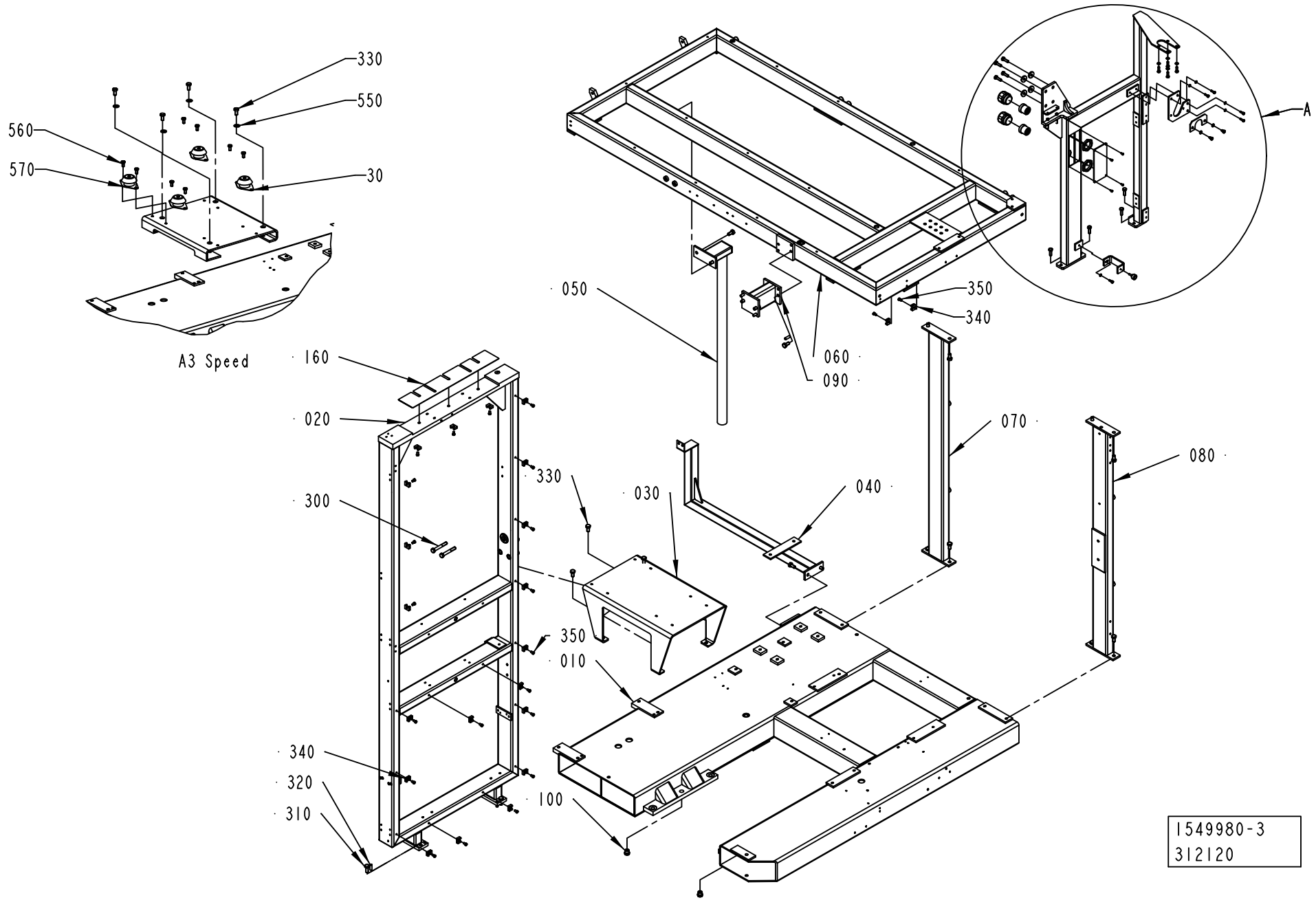
330
550
560
570
30
A3 Speed
A
050
350
340
060
090
160
020
070
080
330
030
040
300
350
010
340
320
310
100
1549980-3
312120

ECM: 342896 - 20080402
Group number: 1549980-0200
Assembly Drawing: 1549980-3_1_AD

This list covers pages from 1-332 to 1-335

Pos	Part No	UN	Qty	Description	Page No
A3/FLEX					
030	1498122-0000		1	BRACKET	
Common Parts					
010	1498121-0000		1	BASE PLATE	
020	1558437-0000		1	FRAME	
040	1498782-0000		1	TANK BRACKET	
050	1484067-0000		1	BRACKET	
060	2696031-0000		1	FRAME UPPER	
070	1498787-0000		1	BRACKET	
080	2696104-0000		1	BRACKET	
090	1558440-0000		1	BRACKET	
100	1490046-0000		2	PIN	
110	2696035-0000		1	COVER	
120	2696034-0000		1	HOLDER	
130	2696036-0000		1	HOLDER	
140	2696032-0000		1	FRAME	
150	2545658-0000		1	PLATE	
160	2894612-0000		1	SHIM	
300	312105-0505		2	SCREW M6S ISO 4014 M10X70 A480	
310	312105-0493		4	SCREW M6S ISO 4017 M10X25 A480	
320	311103-0403		6	PARALLEL PIN ISO 2338 8M6X25 A1	
330	312105-0491		20	SCREW M6S ISO 4017 M10X20 A480	
340	352113-0204		22	ANCHOR PLATES FOR STRIPS, TYPE TM3S25-M	
350	312125-0364		22	SCREW ISO 1207 M6X10 A4	
360	90051-0035		1	KNOB, EXTERNAL THREAD. NO. 8308-1135	
370	90099-0120		2	NUT, PR 37 (PG29)	
380	312105-0329		5	SCREW M6S ISO 4017 M5X16 A480	
400	312105-0453		8	SCREW M6S ISO 4017 M8X25 A480	
420	312125-0287		4	SCREW ISO 1207 M4X8 A4	
430	312311-0329		2	SCREW ISO4028 M5X16 FZB	
440	312605-0314		2	HEXAGON NUT, M6M M5 A280	
460	315105-0146		5	WASHER BRB 5,3X10 RFR	
490	315125-0165		4	WASHER TBRSB 8,4X26X5 A4	
500	353240-0006		2	GLAND W/O INSERT PG29 NORMAL	
510	353249-0079		2	INSERT, MULTI HOLE, E155M8X5,5	
520	312105-0370		4	SCREW M6S ISO 4017 M6X20 A480	
530	312105-0364		2	SCREW M6S ISO 4017 M6X10 A480	
540	315105-0153		6	WASHER BRB 6,4X12 RFR	

Pos	Part No	UN	Qty	Description	Page No

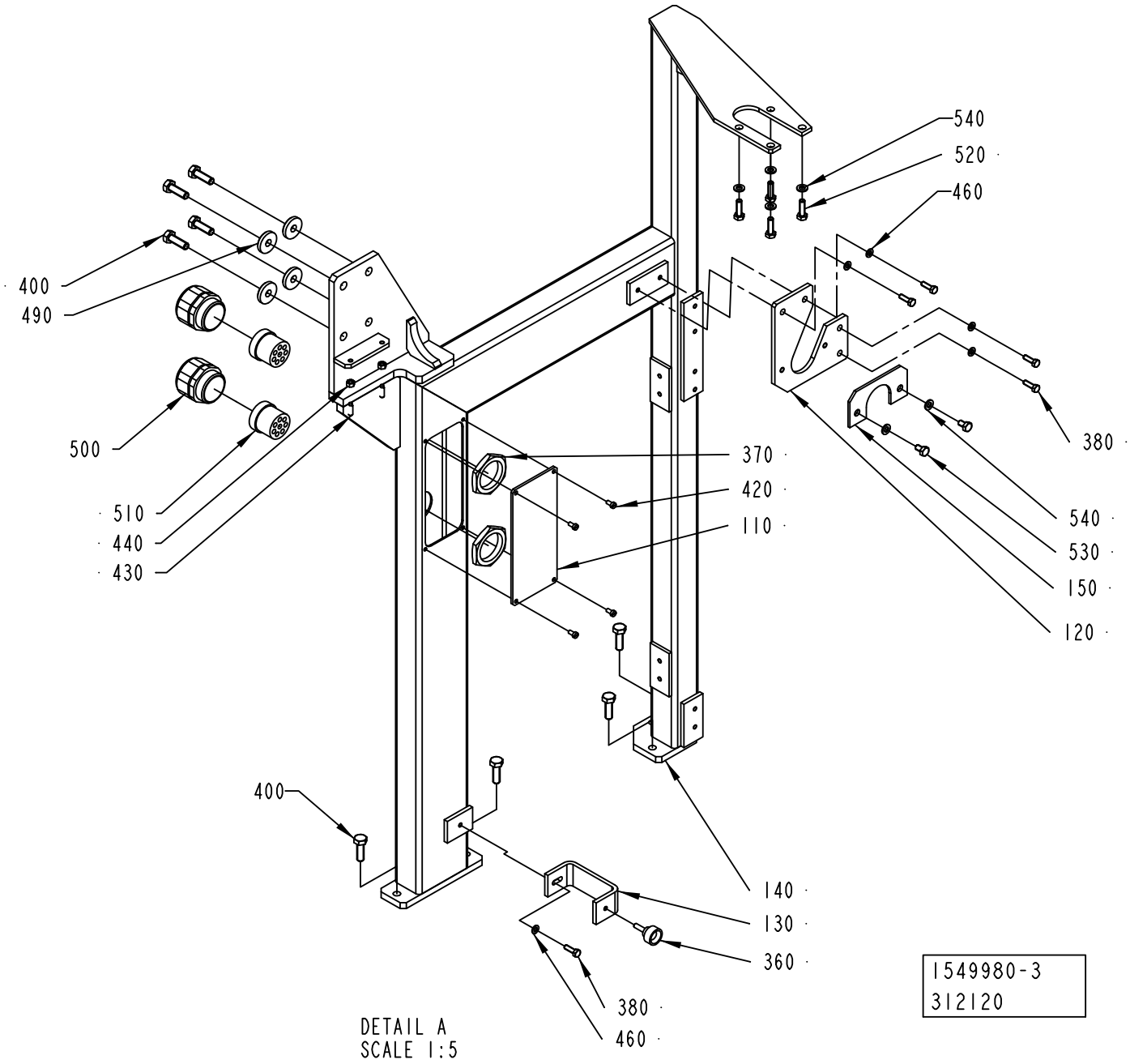
540
520
460
400
490
500
510
440
430
370
420
110
380
540
530
150
120
400
140
130
360
380
460
DETAIL A
SCALE 1:5
1549980-3
312120

ECM: 342896 - 20080402
Group number: 1549980-0200
Assembly Drawing: 1549980-3_2_AD

This list covers pages from 1-332 to 1-335

Pos	Part No	UN	Qty	Description	Page No
A3/FLEX					
030	1498122-0000		1	BRACKET	
Common Parts					
010	1498121-0000		1	BASE PLATE	
020	1558437-0000		1	FRAME	
040	1498782-0000		1	TANK BRACKET	
050	1484067-0000		1	BRACKET	
060	2696031-0000		1	FRAME UPPER	
070	1498787-0000		1	BRACKET	
080	2696104-0000		1	BRACKET	
090	1558440-0000		1	BRACKET	
100	1490046-0000		2	PIN	
110	2696035-0000		1	COVER	
120	2696034-0000		1	HOLDER	
130	2696036-0000		1	HOLDER	
140	2696032-0000		1	FRAME	
150	2545658-0000		1	PLATE	
160	2894612-0000		1	SHIM	
300	312105-0505		2	SCREW M6S ISO 4014 M10X70 A480	
310	312105-0493		4	SCREW M6S ISO 4017 M10X25 A480	
320	311103-0403		6	PARALLEL PIN ISO 2338 8M6X25 A1	
330	312105-0491		20	SCREW M6S ISO 4017 M10X20 A480	
340	352113-0204		22	ANCHOR PLATES FOR STRIPS, TYPE TM3S25-M	
350	312125-0364		22	SCREW ISO 1207 M6X10 A4	
360	90051-0035		1	KNOB, EXTERNAL THREAD. NO. 8308-1135	
370	90099-0120		2	NUT, PR 37 (PG29)	
380	312105-0329		5	SCREW M6S ISO 4017 M5X16 A480	
400	312105-0453		8	SCREW M6S ISO 4017 M8X25 A480	
420	312125-0287		4	SCREW ISO 1207 M4X8 A4	
430	312311-0329		2	SCREW ISO4028 M5X16 FZB	
440	312605-0314		2	HEXAGON NUT, M6M M5 A280	
460	315105-0146		5	WASHER BRB 5,3X10 RFR	
490	315125-0165		4	WASHER TBRSB 8,4X26X5 A4	
500	353240-0006		2	GLAND W/O INSERT PG29 NORMAL	
510	353249-0079		2	INSERT, MULTI HOLE, E155M8X5,5	
520	312105-0370		4	SCREW M6S ISO 4017 M6X20 A480	
530	312105-0364		2	SCREW M6S ISO 4017 M6X10 A480	
540	315105-0153		6	WASHER BRB 6,4X12 RFR	

Pos	Part No	UN	Qty	Description	Page No

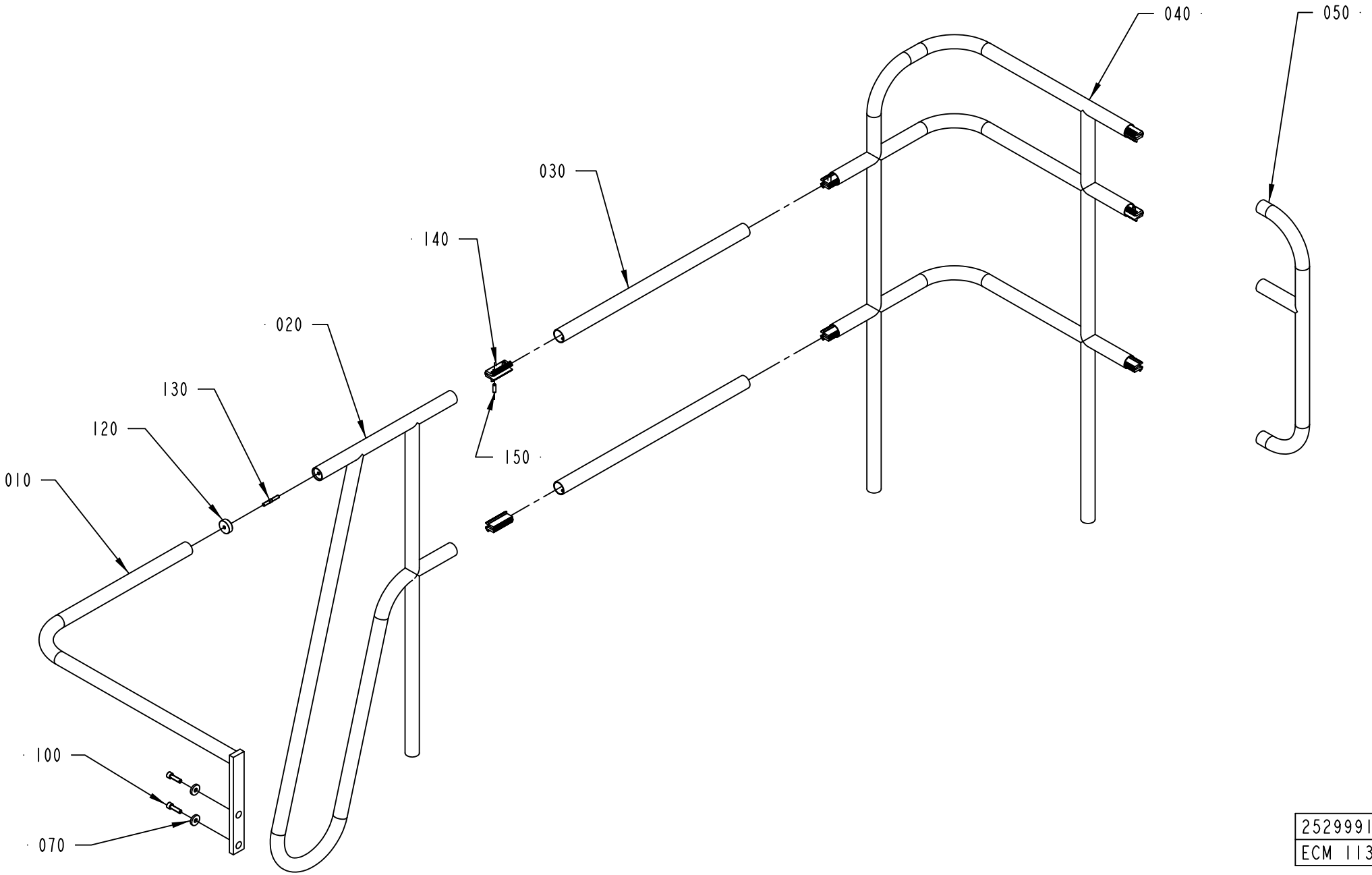

2529991-1
ECM 113014

ECM: 189104 - 20041104
Group number: 2529991-0100
Assembly Drawing: 2529991-1_1_AA

Pos	Part No	UN	Qty	Description	Page No
-					
010	1499735-0000		1	RAILING	
020	1129741-0000		1	RAILING	
030	1037044-0000		2	RAILING	
040	2530096-0000		1	RAILING	
050	2529926-0000		1	RAILING	
100	312115-0497		2	SCREW ISO4762 M10X35 A4 80	
110	1254410-0000		2	WASHER	
120	578640-0000		1	CLAMPING RING	
130	751485-0000		1	SCREW	
140	1035654-0000		7	CONNECTION	
150	312318-0453		14	SCREW ISO4029 M8X25 A4	

Pos	Part No	UN	Qty	Description	Page No

LADDER

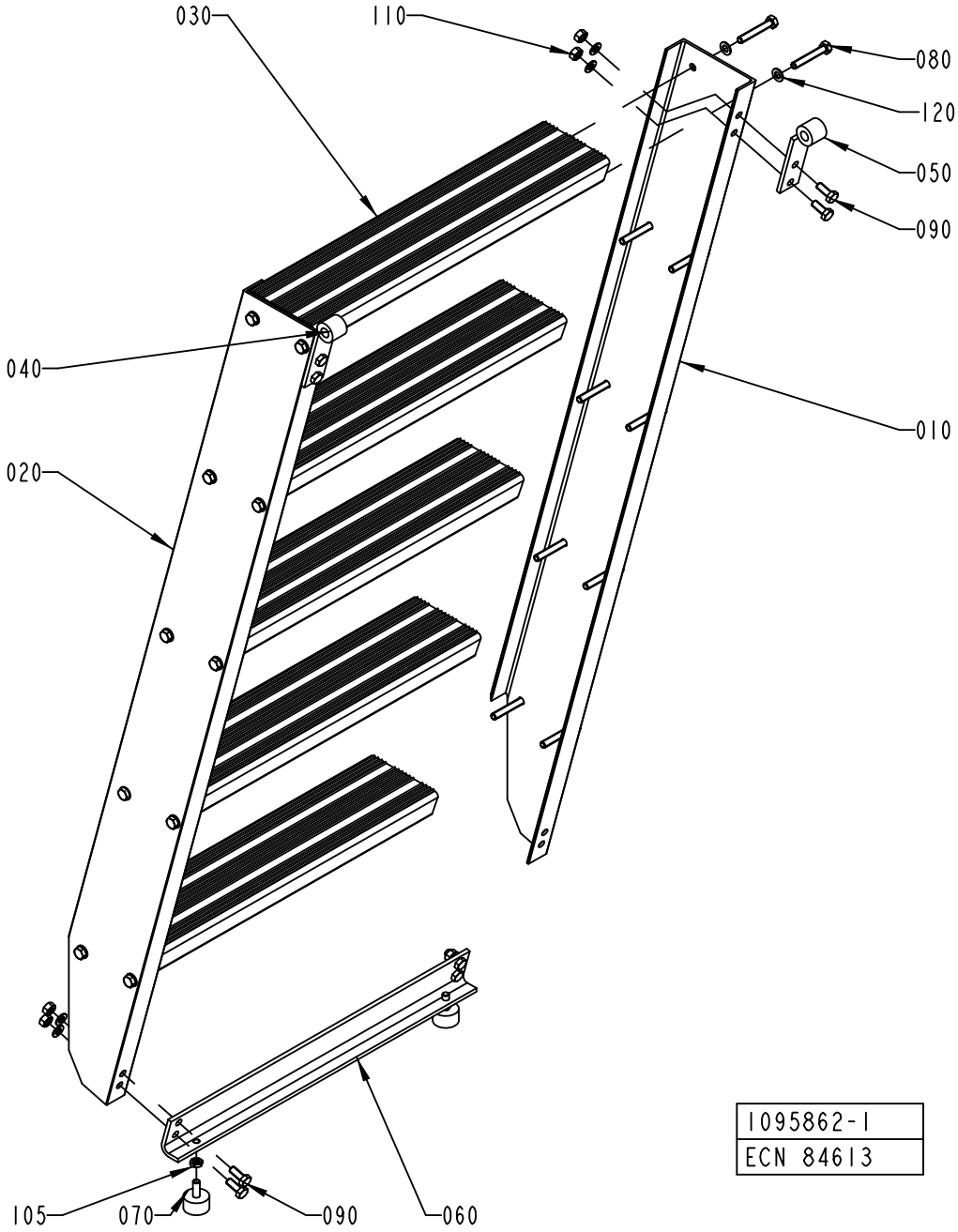
030
110
080
120
050
090
040
010
020
105
070
090
060
1095862-1
ECN 84613

ECM: 358935 - 20081001
Group number: 1095862-0100
Assembly Drawing: 1095862-1_1_AB

Pos	Part No	UN	Qty	Description	Page No
-					
010	1036939-0000		1	SIDE PIECE	
020	1036940-0000		1	SIDE PIECE	
030	1129643-0000		5	STAIR	
040	1036963-0000		1	HOOK HOLDER	
050	1036965-0000		1	HOOK HOLDER	
060	1129644-0000		2	BRACKET	
070	90347-0004		2	VIBRATION DAMPER D=30 TH=M8 H=17 H2=21MM	
080	312104-0461		20	SCREW M6S M8X50H FZB	
090	312105-0451		8	SCREW M6S ISO 4017 M8X20 A480	
105	312625-0318		2	HEXAGON THIN NUT, EN 24035 ML6M M8 A4	
110	312605-0318		8	HEXAGON NUT, M6M M8 A280	
120	315101-0165		28	WASHER PLAIN, BRB, 8,4/16 H=1,5	

Pos	Part No	UN	Qty	Description	Page No

BENDING ROLLER

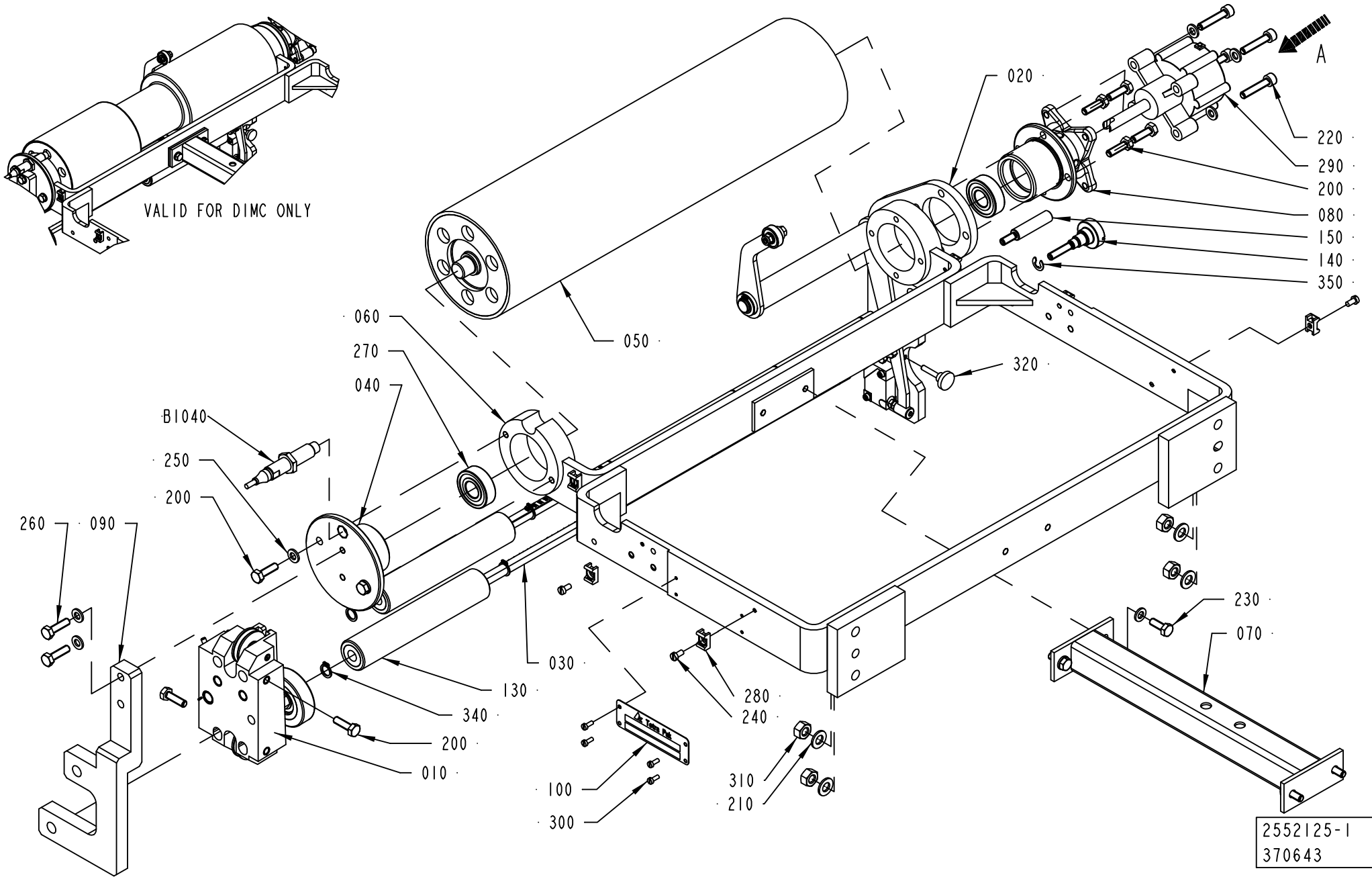

ECM: 393467 - 20090701
Group number: 2552125-0100
Assembly Drawing: 2552125-1_1_AF

Pos	Part No	UN	Qty	Description	Page No
A3/FLEX DIMC/FLEX (See drawing on page: 1-340)					
040	1558352-0000		1	FLANGE	
050	2532908-0000		1	ROLLER	
270	321313-0102		2	BALL BEARING, 15X35X11 MM	
320	318860-0103		1	KNOB, ADJUST.HI.EXT.THREAD, NO 8324-3585	
A3/FLEX TBA 2000S NODIMC, A3/FLEX TBA 1890S NODIMC, A3/FLEX TBA 1400B NODIMC (See drawing on page: 1-340)					
040	1558352-0000		1	FLANGE	
050	2662639-0000		1	ROLLER	
270	321313-0102		2	BALL BEARING, 15X35X11 MM	
320	318860-0103		1	KNOB, ADJUST.HI.EXT.THREAD, NO 8324-3585	
A3/FLEX TPA 500SQ LIGHTCAP (See drawing on page: 1-340)					
040	1558352-0000		1	FLANGE	
050	2951501-0000		1	ROLLER	
270	321313-0102		2	BALL BEARING, 15X35X11 MM	
320	318860-0103		1	KNOB, ADJUST.HI.EXT.THREAD, NO 8324-3585	
A3/FLEX TBA 0200S NODIMC, A3/FLEX TBA 1000SQ NODIMC, A3/FLEX TBA 1000S NODIMC, A3/FLEX TBA 1000B NODIMC, A3/FLEX TBA 0500B NODIMC, A3/FLEX TPA 1000SQ NODIMC, A3/FLEX TBA 1500S NODIMC, A3/FLEX TBA 0200B NODIMC, A3/FLEX TBA 0250B NODIMC, A3/FLEX TBA 0330S NODIMC, A3/FLEX TPA 0330SQ NODIMC, A3/FLEX TPA 0500SQ NODIMC, A3/FLEX TBA 0250S NODIMC, A3/FLEX TBA 0200M NODIMC, A3/FLEX TBA 0500S NODIMC, A3/FLEX TPA 0200SQ NODIMC, A3/FLEX TPA 0250SQ NODIMC, A3/FLEX TPA 0750SQ NODIMC, A3/FLEX TBA 0200SQ NODIMC, A3/FLEX TBA 0250SQ NODIMC, A3/FLEX TGA 1000SQ NODIMC, A3/FLEX TBA 0500SQ NODIMC, A3/FLEX TGA 0500SQ NODIMC, A3/FLEX TGA 0750SQ NODIMC (See drawing on page: 1-340)					
040	1558352-0000		1	FLANGE	
050	2532911-0000		1	ROLLER	
270	321313-0102		2	BALL BEARING, 15X35X11 MM	
320	318860-0103		1	KNOB, ADJUST.HI.EXT.THREAD, NO 8324-3585	
Common Parts					
010	2601483-0100		1	PAPER GUIDE	**1-343**
020	1558356-0100		1	SPLICE DETECTOR	**1-345, 1-347**
030	2891969-0000		2	ROD	
060	2547425-0000		1	BRACKET	
070	2552124-0000		1	BRACKET	
080	2528110-0000		1	HOUSING	
090	2547568-0000		1	PLATE	
100	979548-0000		1	MACHINE PLATE	
130	2833054-0000		2	ROLLER	
140	2891970-0000		1	KNOB	
150	2891971-0000		1	PLUG	
200	312105-0370		8	SCREW M6S ISO 4017 M6X20 A480	
210	315105-0165		4	WASHER BRB 8,4X16 RFR	
220	312115-0374		4	SCREW ISO4762 M6X30 A4 80	
230	312105-0368		4	SCREW M6S ISO 4017 M6X16 A480	
240	312125-0287		6	SCREW ISO 1207 M4X8 A4	
250	315105-0153		12	WASHER BRB 6,4X12 RFR	
260	312105-0372		2	SCREW M6S ISO 4017 M6X25 A480	
280	352113-0205		6	ANCHOR PLATES FOR STRIPS, TYPE TM2S8-C10	
290	90347-0054		1	ROTARY DASHPOT, S-CRD-P277	
300	312125-0222		4	SCREW ISO 1207 M3X8 A4	
310	312605-0318		4	HEXAGON NUT, M6M M8 A280	
340	90141-0016		4	RETAINING RING FOR SHAFT DIN 471 10 SS	
350	315755-0108		1	RETAINING RING SHAFT DIN 6799 6 A2	
B1040	90600-0463		1	INDUCTIVE SWITCH,E2A-M12LN05-WP-B1-TP 5M	

Machine Type | Group Description | Used-In | Group Number | Page No

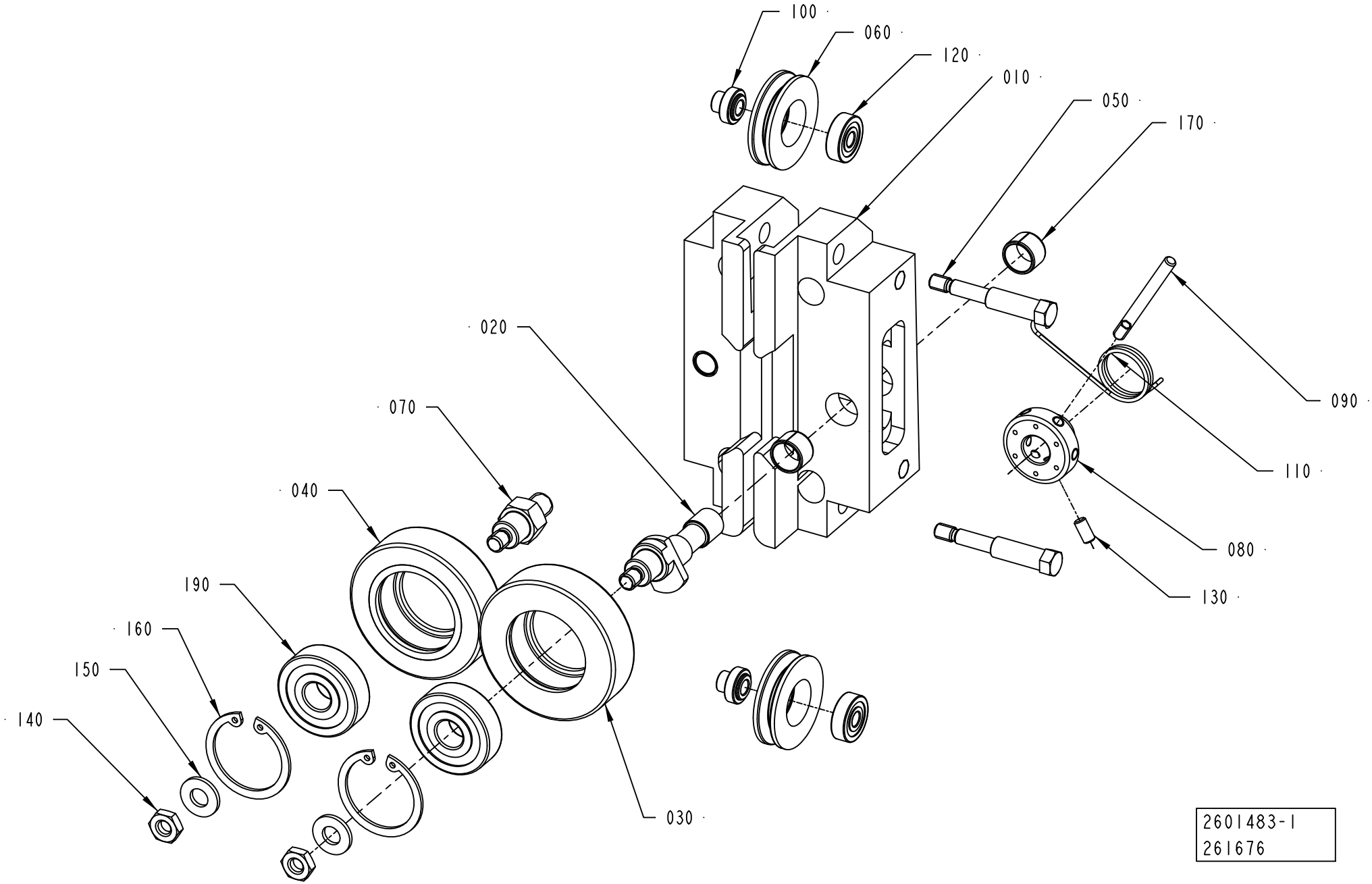
100
060
120
010
050
170
020
070
040
090
110
080
130
190
160
150
140
030
2601483-1
261676

ECM: 390900 - 20090403
Group number: 2601483-0100
Assembly Drawing: 2601483-1_1_AB

Pos	Part No	UN	Qty	Description	Page No
-					
010	2832463-0000		1	SUPPORT	
020	2503436-0000		1	SHAFT	
030	2594126-0000		1	GUIDE ROLLER	
040	1036623-0000		1	GUIDE ROLLER	
050	2533671-0000		2	SCREW	
060	2533673-0000		2	ROLLER	
070	1558254-0000		1	SHAFT	
080	2594125-0000		1	SLEEVE	
090	2503438-0000		1	LEVER	
100	2533672-0000		2	SHAFT	
110	2591782-0000		1	SPRING	
120	90214-0037		2	BALL BEARING, 5X16X5 MM	
130	312318-0287		1	SCREW ISO4029 M4X8 A4	
140	312625-0316		2	HEXAGON THIN NUT, EN 24035 ML6M M6 A4	
150	315105-0156		2	WASHER BRB 6,7X14 RFR	
160	315753-0122		2	RETAINING RING FOR BORE DIN 472 30 A2	
170	321141-0138		2	BEARING BUSH W/O FLANGE, 10X12X8 MM	
190	321313-0100		2	BALL BEARING, 10X30X9 MM	

Pos	Part No	UN	Qty	Description	Page No

SPLICE DETECTOR

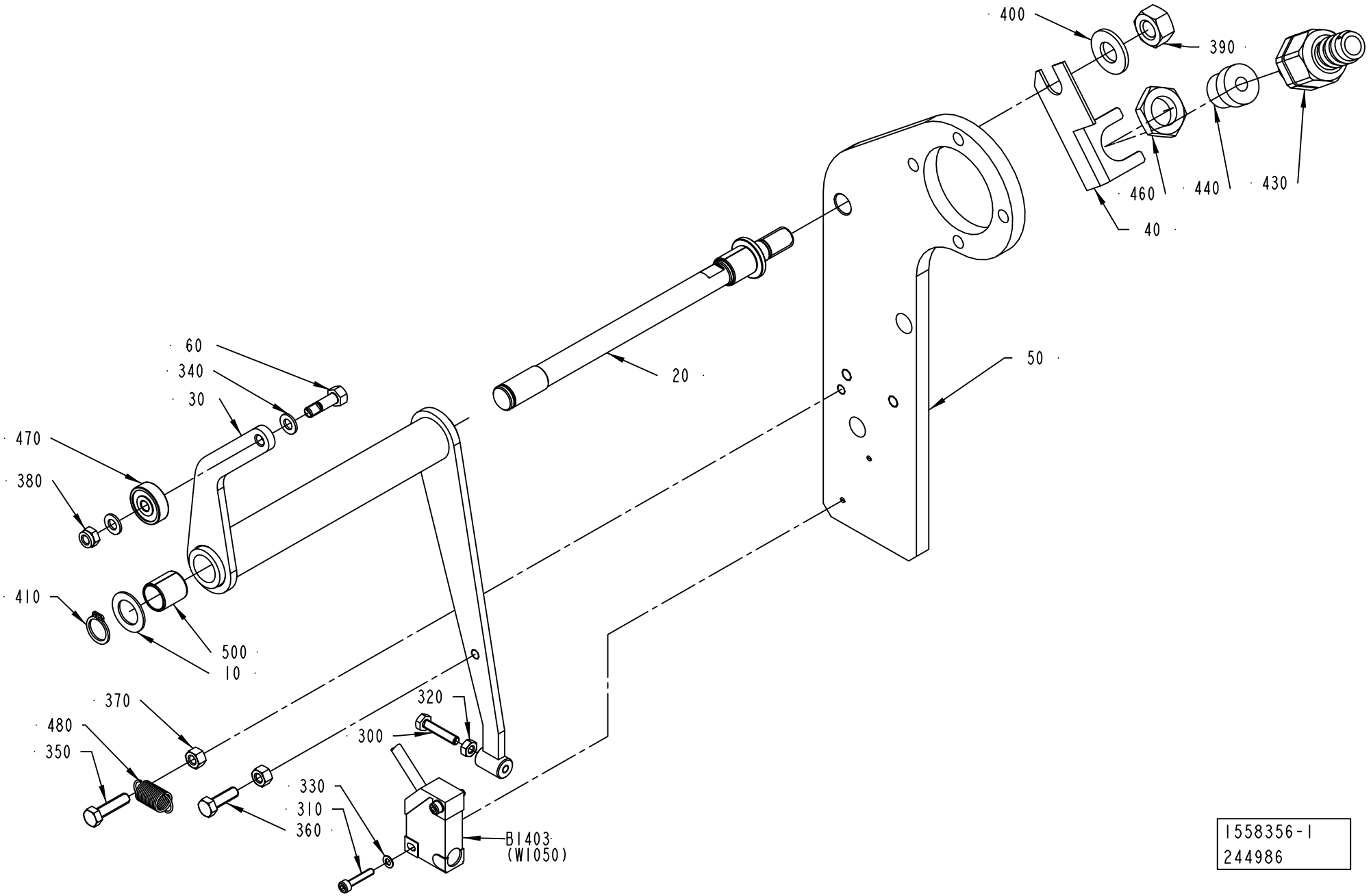

1558356-1
244986

ECM: 323472 - 20080101
Group number: 1558356-0100
Assembly Drawing: 1558356-1_1_AB

This list covers pages from 1-344 to 1-347

Pos	Part No	UN	Qty	Description	Page No
A3/FLEX TBA 0200B, A3/FLEX TBA 0250B, A3/FLEX TBA 0330S (See drawing on page: 1-344)					
020	2707506-0000		1	SHAFT	
030	2690377-0000		1	BRACKET	
060	2528135-0000		1	SHAFT	
340	315105-0146		2	WASHER BRB 5,3X10 RFR	
470	90214-0138		1	BALL BEARING, 5X19X6 MM	
480	90335-0089		1	TENSION SPRING 41490, 0,9X10X23	
A3/FLEX TBA 0500B, A3/FLEX TBA 1000B, A3/FLEX TBA 1000S, A3/FLEX TBA 1000SQ, A3/FLEX TPA 1000SQ, A3/FLEX TBA 0200S, A3/FLEX TBA 1500S, A3/FLEX TPA 0330SQ, A3/FLEX TPA 0500SQ, A3/FLEX TBA 0200M, A3/FLEX TBA 0250S, A3/FLEX TBA 0500S, A3/FLEX TPA 0200SQ QC, A3/FLEX TPA 0250SQ QC, A3/FLEX TPA 0750SQ, A3/FLEX TBA 0200SQ, A3/FLEX TBA 0250SQ, A3/FLEX TBA 0500SQ, A3/FLEX TGA 1000SQ, A3/FLEX TGA 0500SQ, A3/FLEX TGA 0750SQ (See drawing on page: 1-344)					
020	2528128-0000		1	SHAFT	
030	2528127-0000		1	BRACKET	
060	2528135-0000		1	SHAFT	
340	315105-0146		2	WASHER BRB 5,3X10 RFR	
470	90214-0138		1	BALL BEARING, 5X19X6 MM	
480	90335-0089		1	TENSION SPRING 41490, 0,9X10X23	
A3/FLEX TBA 1890S, A3/FLEX TBA 2000S, A3/FLEX TBA 1400B (See drawing on page: 1-346)					
020	2528128-0000		1	SHAFT	
030	2528127-0000		1	BRACKET	
060	2721434-0000		1	SHAFT	
340	315105-0146		4	WASHER BRB 5,3X10 RFR	
470	90214-0138		2	BALL BEARING, 5X19X6 MM	
480	90459-5581		1	TENSION SPRING 1,2X23X8,5	
Common Parts					
010	266737-0000		1	WASHER	
040	1036610-0000		1	BRACKET	
050	2528105-0000		1	PLATE	
300	312105-0295		1	SCREW M6S ISO 4017 M4X20 A470	
310	312115-0228		2	SCREW ISO4762 M3X16 A4 80	
320	312605-0312		1	HEXAGON NUT, M6M M4 A280	
330	315105-0124		2	WASHER BRB 3,2X6 RFR	
350	312105-0331		1	SCREW M6S ISO 4017 M5X20 A480	
360	312105-0329		1	SCREW M6S ISO 4017 M5X16 A480	
370	312605-0314		2	HEXAGON NUT, M6M M5 A280	
380	312812-0314		1	HEXAGON NUT, NY-LOCK M5 A480	
390	312605-0320		1	HEXAGON NUT, M6M M10 A280	
400	315105-0173		1	WASHER BRB 10,5X22 RFR	
410	315751-0109		1	RETAINING RING FOR SHAFT DIN 471 12 SS	
430	353243-0001		1	HOSE GLAND W/O INSERT PG9 EXTENDED	
440	353249-0008		1	INSERT, SINGLE HOLE, EK 152/7	
460	90099-0104		1	NUT, PR 15,2 (PG9)	
500	321141-0183		2	BEARING BUSH W/O FLANGE, 12X14X15 MM	
B1403	90044-0194		1	INDUCTIVE SENSOR IN5329	

Machine Type | Group Description | Used-In | Group Number | Page No

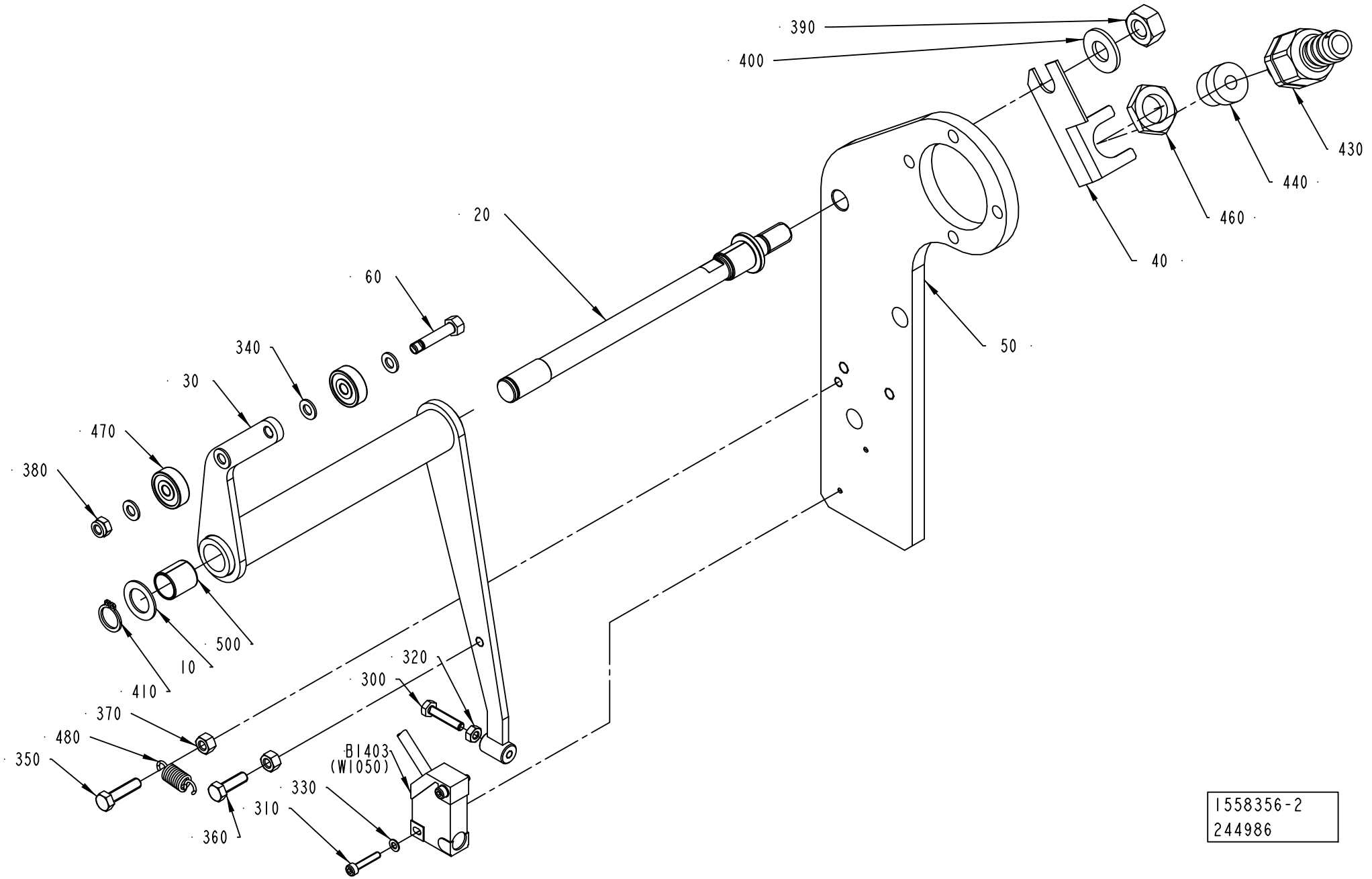
390
400
430
440
460
40
20
50
60
340
30
470
380
500
10
410
320
300
370
480
350
BI403
(WI050)
330
310
360
1558356-2
244986

ECM: 323472 - 20080101
Group number: 1558356-0100
Assembly Drawing: 1558356-2_1_AB

This list covers pages from 1-344 to 1-347

Pos	Part No	UN	Qty	Description	Page No
A3/FLEX TBA 0200B, A3/FLEX TBA 0250B, A3/FLEX TBA 0330S (See drawing on page: 1-344)					
020	2707506-0000		1	SHAFT	
030	2690377-0000		1	BRACKET	
060	2528135-0000		1	SHAFT	
340	315105-0146		2	WASHER BRB 5,3X10 RFR	
470	90214-0138		1	BALL BEARING, 5X19X6 MM	
480	90335-0089		1	TENSION SPRING 41490, 0,9X10X23	
A3/FLEX TBA 0500B, A3/FLEX TBA 1000B, A3/FLEX TBA 1000S, A3/FLEX TBA 1000SQ, A3/FLEX TPA 1000SQ, A3/FLEX TBA 0200S, A3/FLEX TBA 1500S, A3/FLEX TPA 0330SQ, A3/FLEX TPA 0500SQ, A3/FLEX TBA 0200M, A3/FLEX TBA 0250S, A3/FLEX TBA 0500S, A3/FLEX TPA 0200SQ QC, A3/FLEX TPA 0250SQ QC, A3/FLEX TPA 0750SQ, A3/FLEX TBA 0200SQ, A3/FLEX TBA 0250SQ, A3/FLEX TBA 0500SQ, A3/FLEX TGA 1000SQ, A3/FLEX TGA 0500SQ, A3/FLEX TGA 0750SQ (See drawing on page: 1-344)					
020	2528128-0000		1	SHAFT	
030	2528127-0000		1	BRACKET	
060	2528135-0000		1	SHAFT	
340	315105-0146		2	WASHER BRB 5,3X10 RFR	
470	90214-0138		1	BALL BEARING, 5X19X6 MM	
480	90335-0089		1	TENSION SPRING 41490, 0,9X10X23	
A3/FLEX TBA 1890S, A3/FLEX TBA 2000S, A3/FLEX TBA 1400B (See drawing on page: 1-346)					
020	2528128-0000		1	SHAFT	
030	2528127-0000		1	BRACKET	
060	2721434-0000		1	SHAFT	
340	315105-0146		4	WASHER BRB 5,3X10 RFR	
470	90214-0138		2	BALL BEARING, 5X19X6 MM	
480	90459-5581		1	TENSION SPRING 1,2X23X8,5	
Common Parts					
010	266737-0000		1	WASHER	
040	1036610-0000		1	BRACKET	
050	2528105-0000		1	PLATE	
300	312105-0295		1	SCREW M6S ISO 4017 M4X20 A470	
310	312115-0228		2	SCREW ISO4762 M3X16 A4 80	
320	312605-0312		1	HEXAGON NUT, M6M M4 A280	
330	315105-0124		2	WASHER BRB 3,2X6 RFR	
350	312105-0331		1	SCREW M6S ISO 4017 M5X20 A480	
360	312105-0329		1	SCREW M6S ISO 4017 M5X16 A480	
370	312605-0314		2	HEXAGON NUT, M6M M5 A280	
380	312812-0314		1	HEXAGON NUT, NY-LOCK M5 A480	
390	312605-0320		1	HEXAGON NUT, M6M M10 A280	
400	315105-0173		1	WASHER BRB 10,5X22 RFR	
410	315751-0109		1	RETAINING RING FOR SHAFT DIN 471 12 SS	
430	353243-0001		1	HOSE GLAND W/O INSERT PG9 EXTENDED	
440	353249-0008		1	INSERT, SINGLE HOLE, EK 152/7	
460	90099-0104		1	NUT, PR 15,2 (PG9)	
500	321141-0183		2	BEARING BUSH W/O FLANGE, 12X14X15 MM	
B1403	90044-0194		1	INDUCTIVE SENSOR IN5329	

Machine Type	Group Description	Used-In	Group Number	Page No

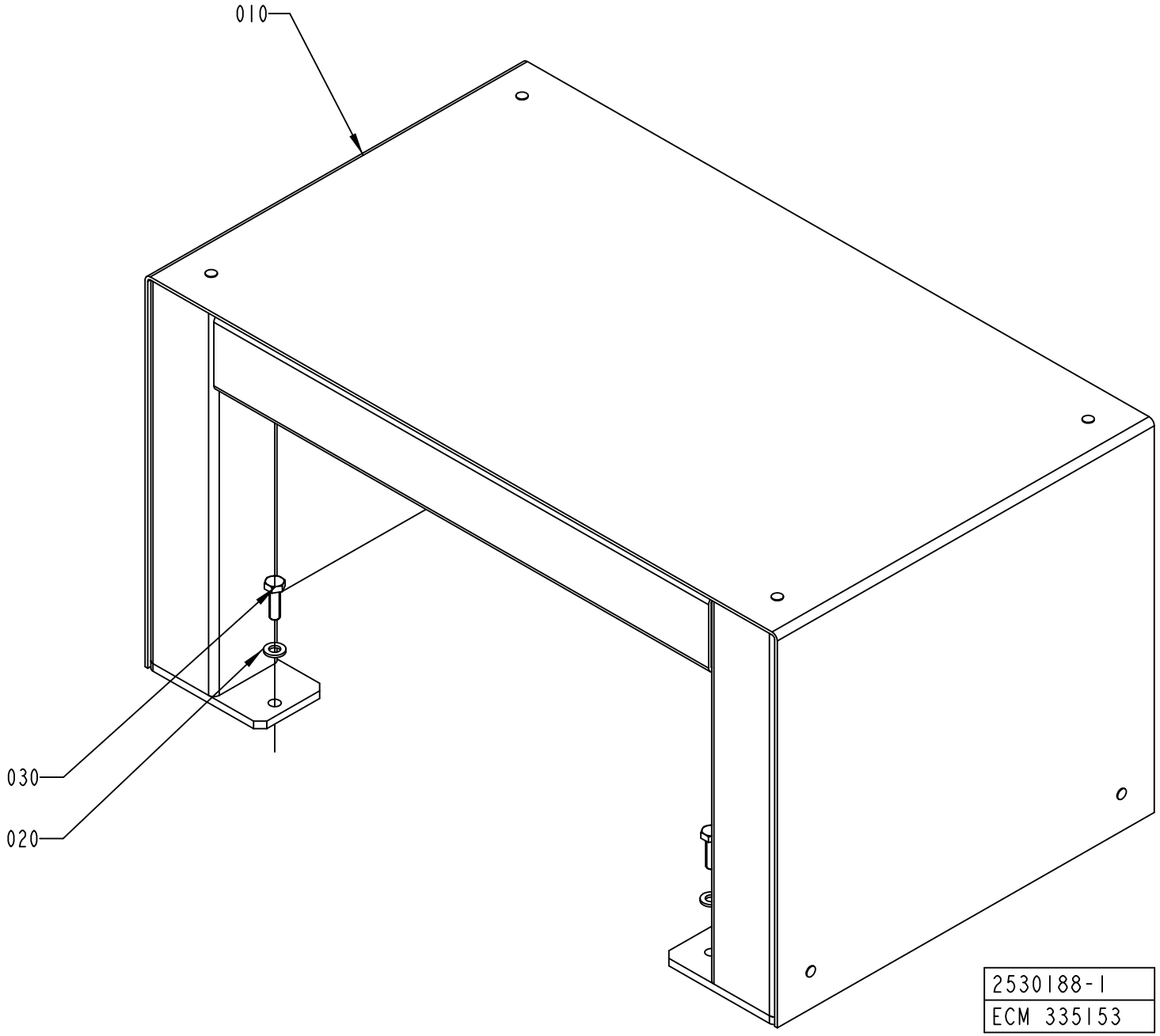
010
030
020
2530188-1
ECM 335153

ECM: 337250 - 20080104
Group number: 2530188-0100
Assembly Drawing: 2530188-1_1_AB

Pos	Part No	UN	Qty	Description	Page No
-					
010	2529925-0000		1	STEP	
020	315105-0153		2	WASHER BRB 6,4X12 RFR	
030	312105-0370		2	SCREW M6S ISO 4017 M6X20 A480	

Pos	Part No	UN	Qty	Description	Page No

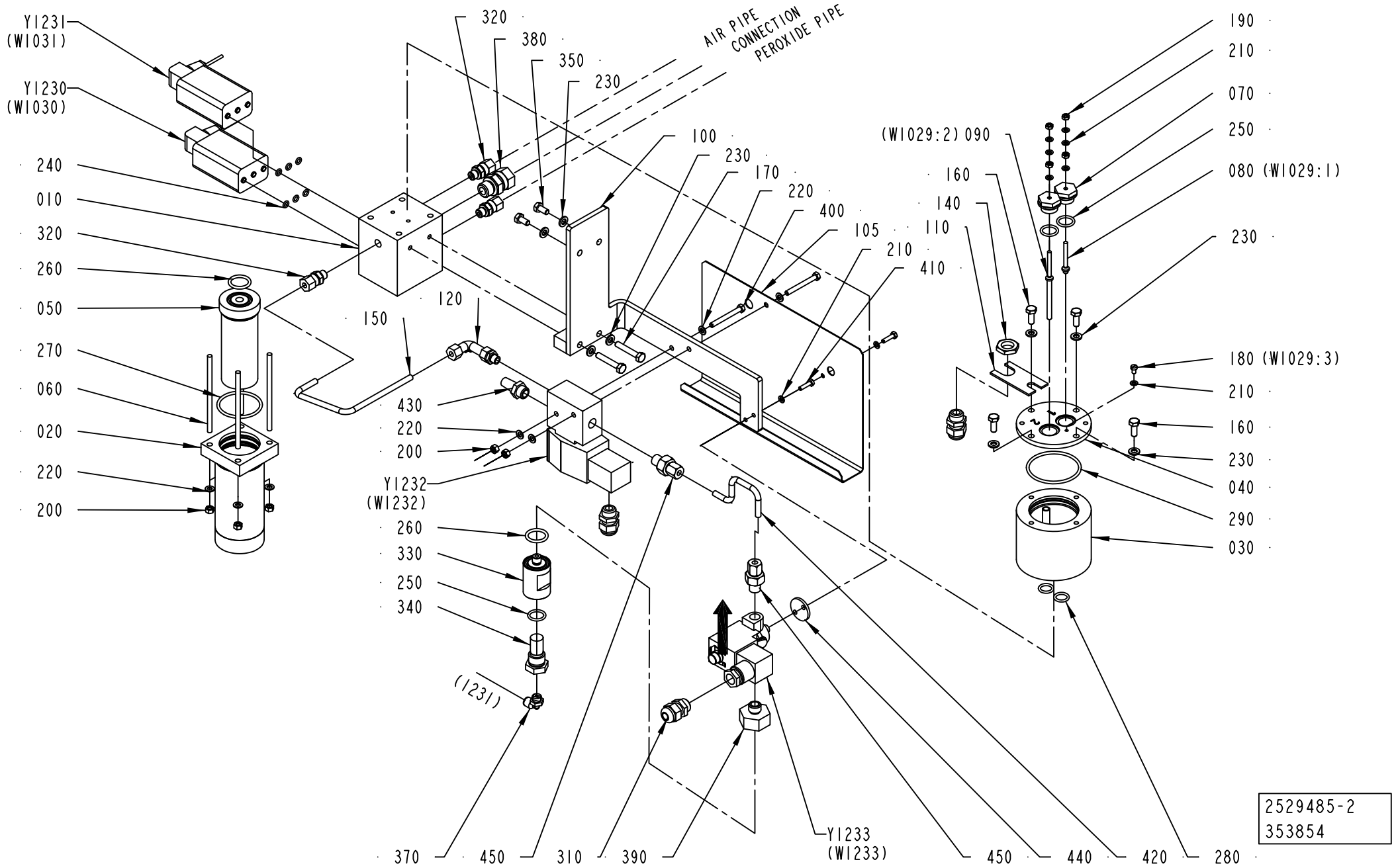
Y1231
(W1031)
Y1230
(W1030)
240
010
320
260
050
270
060
020
220
200
320
380
350
230
AIR PIPE
CONNECTION
PEROXIDE PIPE
100
230
170
220
400
105
210
410
120
150
430
220
200
Y1232
(W1232)
260
330
250
340
(1231)
370
450
310
390
Y1233
(W1233)
450
440
420
280
190
210
070
250
(W1029:2) 090
080 (W1029:1)
160
140
110
230
180 (W1029:3)
210
160
230
040
290
030
2529485-2
353854

ECM: 367917 - 20090101
Group number: 2529485-0200
Assembly Drawing: 2529485-2_1_AE

Pos	Part No	UN	Qty	Description	Page No
-					
010	1532223-0000		1	BLOCK	
020	554142-0000		1	FILTER HOUSING	
030	1478170-0000		1	CONTAINER	
040	549267-0000		1	LID	
050	554141-0000		1	FILTER	
060	554585-0000		4	STUD SCREW	
070	2578486-0000		2	BRACKET	
080	2559045-0004		1	ELECTRODE	
090	2559045-0003		1	ELECTRODE	
100	2763962-0000		1	BRACKET	
105	2812556-0000		1	HEAT GUARD	
110	1040970-0000		1	BRACKET	
120	90030-0203		1	ADJUSTABLE ELBOW CONNECTION,EXT 6-G1/4	
140	90099-0104		1	NUT, PR 15,2 (PG9)	
150	2763966-0000		1	PIPE	
160	312105-0368		4	SCREW M6S ISO 4017 M6X16 A480	
170	312109-0376		2	SCREW M6S ISO 4017 M6X35 A480	
180	312125-0285		1	SCREW ISO 1207 M4X6 A4	
190	312605-0312		4	HEXAGON NUT, M6M M4 A280	
200	312605-0314		6	HEXAGON NUT, M6M M5 A280	
210	315105-0136		9	WASHER BRB 4,3X8 RFR	
220	315105-0146		8	WASHER BRB 5,3X10 RFR	
230	315105-0153		8	WASHER BRB 6,4X12 RFR	
240	927420-0001		6	O-RING 5.1X1.6 SILICONE	
250	927421-0004		3	O-RING 15.3X2.4 SILICONE	
260	927422-0001		2	O-RING 19.2X3 SILICONE	
270	927422-0007		1	O-RING 44.2X3 SILICONE	
280	927421-0002		2	O-RING 12.3X2.4 SILICONE	
290	927422-0009		1	O-RING 54.5X3 SILICONE	
310	352103-0101		3	CABLE GLAND, ST 9, PR15,2/PG9	
320	90030-0184		3	CONN. STR. GE06LRED71	
330	1519486-0000		1	FILTER HOUSING	
340	450833-0000		1	FILTER	
350	312105-0366		2	SCREW M6S ISO 4017 M6X12 A480	
370	90458-2956		1	ELBOW PIPE JOINT, EXT.THREAD, D=6MM-G1/8	
380	90030-0187		1	CONN. STR. GA-12-G3/8	
390	2763969-0000		1	REDUCER	
400	312105-0340		2	SCREW M6S ISO 4014 M5X45 A480	
410	312105-0293		2	SCREW M6S ISO 4017 M4X16 A470	
420	2763967-0000		1	PIPE	
430	346800-0110		1	SILENCER FILTER R1/4"	
440	2763968-0000		1	SPACER	
450	90030-0202		2	CONN. STR., 6-G1/4, EXT. THREAD	
Y1230	90042-0203		1	SOLENOID VALVE BüRKERT	
Y1231	90042-0203		1	SOLENOID VALVE BüRKERT	
Y1232	90459-6975		1	SOLENOID VALVE G1/4, 2401186082702400	
Y1233	90459-6977		1	SOLENOID VALVE G1/4, V04B286N-B423A	

Machine Type	Group Description	Used-In	Group Number	Page No

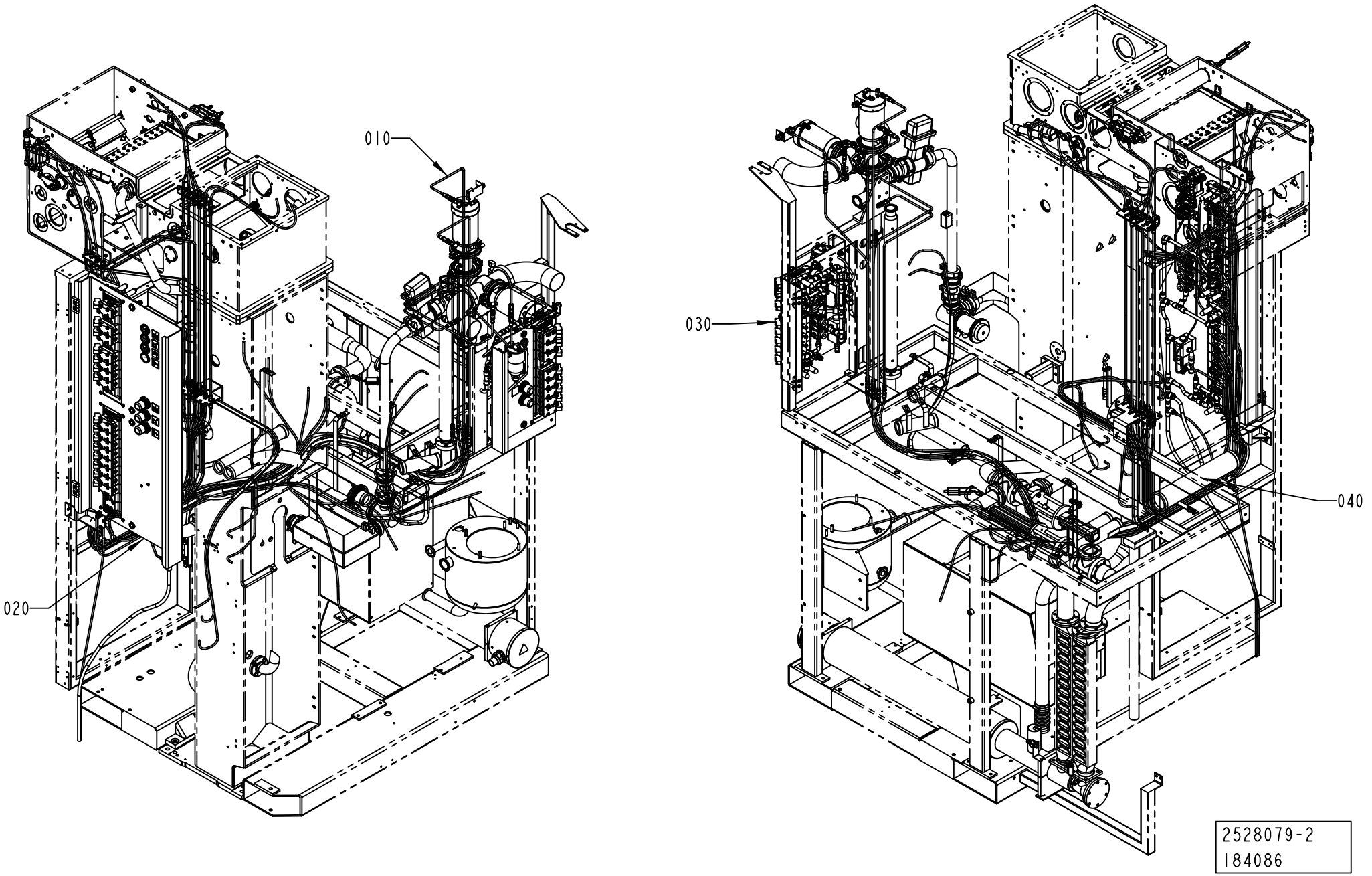
010
020
030
040
2528079-2
184086

ECM: 337740 - 20080401
Group number: 2528079-0200
Assembly Drawing: 2528079-2_1_AA

Pos	Part No	UN	Qty	Description	Page No
-					
005	2565493-0000		1	PNEUMATIC DIAGRAM	
005	2565494-0000		1	PNEUMATIC DIAGRAM	
005	2563276-0000		1	PNEUMATIC DIAGRAM	
005	2565492-0000		1	PNEUMATIC DIAGRAM	
010	2528080-0200		1	HOSE INSTALLATION	**1-355, 1-357, 1-359, 1-361, 1-363, 1-365**
020	2526854-0300		1	VALVE PANEL	**1-367**
030	2526853-0400		1	VALVE PANEL	**1-375**
040	2528081-0200		1	HOSE HOLDER	**1-381**

Pos	Part No	UN	Qty	Description	Page No

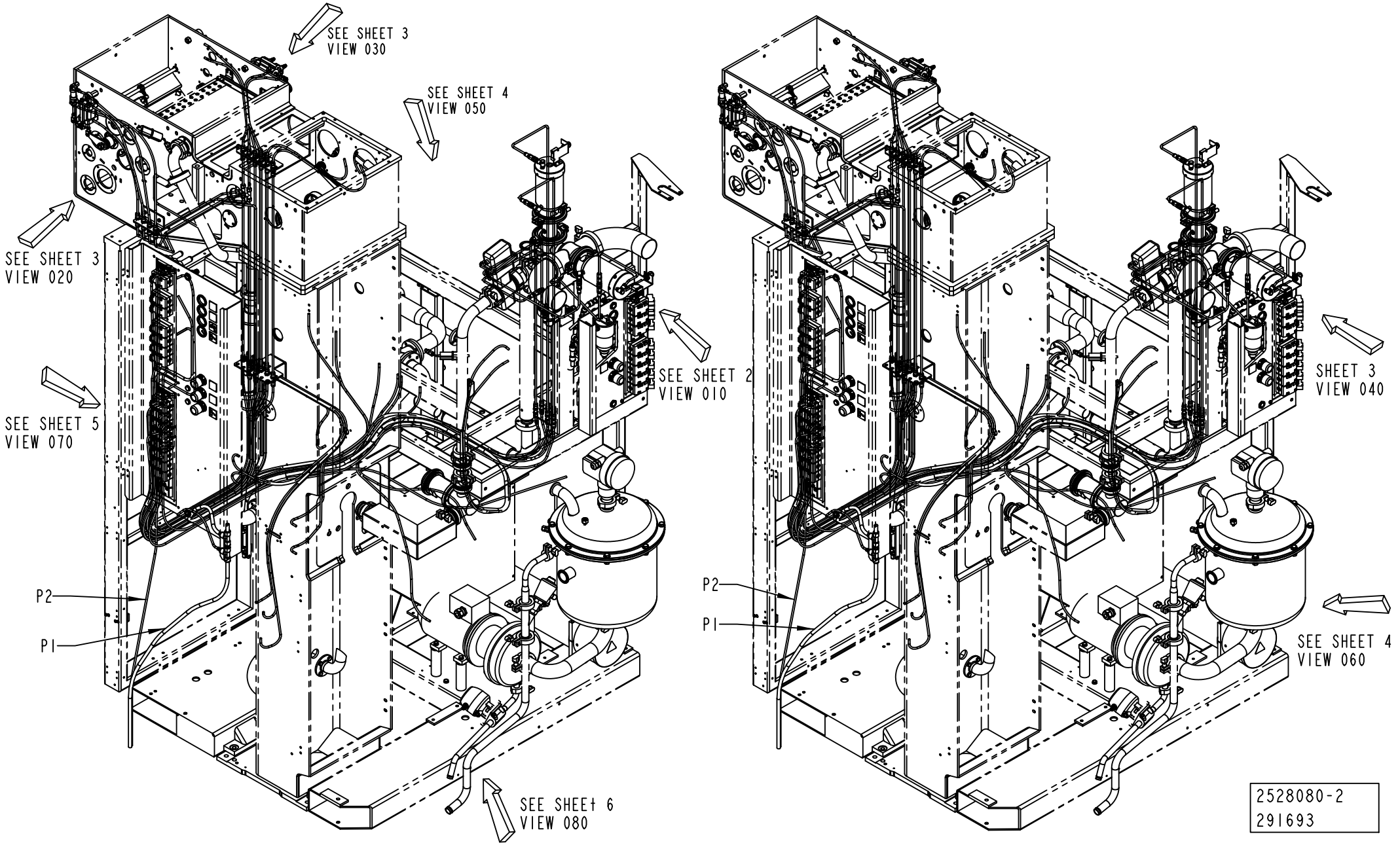
SEE SHEET 3
VIEW 030
SEE SHEET 4
VIEW 050
SEE SHEET 3
VIEW 020
SEE SHEET 2
VIEW 010
SEE SHEET 5
VIEW 070
P2
P1
SEE SHEET 6
VIEW 080
SHEET 3
VIEW 040
P2
P1
SEE SHEET 4
VIEW 060
2528080-2
291693

ECM: 401447 - 20091002
Group number: 2528080-0200
Assembly Drawing: 2528080-2_1_AB

This list covers pages from 1-354 to 1-365

Pos	Part No	UN	Qty	Description	Page No
A3/FLEX HI (See drawing on pages: 1-354, 1-356, 1-358, 1-360, 1-362, 1-364)					
13184	90166-0193	MM	6000	TUBE 6 MM PUR BLUE	
320	342706-0130		28	STIFFNER SLEEVE FOR HOSE 6X1	
440	90224-0349		30	CONN. BULKHEAD. 1250-6	
470	359000-0401		50	WIRE MARKING, YELLOW, PA2/4"1"	
480	359000-0402		50	WIRE MARKING, YELLOW, PA2/4"2"	
500	359000-0404		50	WIRE MARKING, YELLOW, PA2/4"4"	
520	359000-0406		50	WIRE MARKING, YELLOW, PA2/4"6"	
91014	90166-0193	MM	2500	TUBE 6 MM PUR BLUE	
91052	90166-0193	MM	3800	TUBE 6 MM PUR BLUE	
91064	90166-0193	MM	3800	TUBE 6 MM PUR BLUE	
A3/FLEX NOHI (See drawing on pages: 1-354, 1-356, 1-358, 1-360, 1-362, 1-364)					
13184	90166-0193	MM	6000	TUBE 6 MM PUR BLUE	
320	342706-0130		28	STIFFNER SLEEVE FOR HOSE 6X1	
440	90224-0349		30	CONN. BULKHEAD. 1250-6	
470	359000-0401		50	WIRE MARKING, YELLOW, PA2/4"1"	
480	359000-0402		50	WIRE MARKING, YELLOW, PA2/4"2"	
500	359000-0404		50	WIRE MARKING, YELLOW, PA2/4"4"	
520	359000-0406		50	WIRE MARKING, YELLOW, PA2/4"6"	
Common Parts					
010	1484405-0000		1	PIPE	
020	1524237-0000		1	PIPE	
030	2695999-0000		1	PIPE	
040	1524239-0000		1	PIPE	
050	2696000-0000		1	PIPE	
060	2696001-0000		1	PIPE	
070	1524242-0000		1	PIPE	
080	1528727-0000		2	PIPE	
090	1528728-0000		2	PIPE	
100	1524233-0000		2	PIPE	
110	1524234-0000		6	PIPE	
11072	90166-0193	MM	2600	TUBE 6 MM PUR BLUE	
11074	90166-0193	MM	2600	TUBE 6 MM PUR BLUE	
11082	90166-0193	MM	2600	TUBE 6 MM PUR BLUE	
11084	90166-0193	MM	2600	TUBE 6 MM PUR BLUE	
11112	90166-0193	MM	2800	TUBE 6 MM PUR BLUE	
11114	90166-0193	MM	2800	TUBE 6 MM PUR BLUE	
11122	90166-0193	MM	1900	TUBE 6 MM PUR BLUE	
11122:1	90166-0193	MM	700	TUBE 6 MM PUR BLUE	
11124	90166-0193	MM	1900	TUBE 6 MM PUR BLUE	
11124:1	90166-0193	MM	700	TUBE 6 MM PUR BLUE	
120	1524243-0000		2	PIPE	
1231	90166-0193	MM	3000	TUBE 6 MM PUR BLUE	
12412	90166-0193	MM	3300	TUBE 6 MM PUR BLUE	
12414	90166-0193	MM	3300	TUBE 6 MM PUR BLUE	
12422	90166-0193	MM	2800	TUBE 6 MM PUR BLUE	
12424	90166-0193	MM	2800	TUBE 6 MM PUR BLUE	
130	1523818-0000		1	BRACKET	
13032	90166-0193	MM	3700	TUBE 6 MM PUR BLUE	
13034	90166-0193	MM	3700	TUBE 6 MM PUR BLUE	
13122	90166-0193	MM	3700	TUBE 6 MM PUR BLUE	
13124	90166-0193	MM	3700	TUBE 6 MM PUR BLUE	
13141	90166-0193	MM	1200	TUBE 6 MM PUR BLUE	
13232	90166-0193	MM	3700	TUBE 6 MM PUR BLUE	
13234	90166-0193	MM	3500	TUBE 6 MM PUR BLUE	
13261	90166-0068	MM	1250	TUBE 12 MM PA BLUE	
140	1523819-0000		1	BRACKET	
14012	90166-0193	MM	3500	TUBE 6 MM PUR BLUE	
14014	90166-0193	MM	3500	TUBE 6 MM PUR BLUE	
150	1523820-0000		1	BRACKET	
15012	90166-0193	MM	2600	TUBE 6 MM PUR BLUE	
15012:1	90166-0193	MM	650	TUBE 6 MM PUR BLUE	
15014	90166-0193	MM	2000	TUBE 6 MM PUR BLUE	
15014:1	90166-0193	MM	600	TUBE 6 MM PUR BLUE	
15022	90166-0193	MM	2600	TUBE 6 MM PUR BLUE	
15022:1	90166-0193	MM	500	TUBE 6 MM PUR BLUE	
15022:2	90166-0193	MM	550	TUBE 6 MM PUR BLUE	
15024	90166-0193	MM	2600	TUBE 6 MM PUR BLUE	
15024:1	90166-0193	MM	500	TUBE 6 MM PUR BLUE	
15024:2	90166-0193	MM	550	TUBE 6 MM PUR BLUE	
15032	90166-0193	MM	2600	TUBE 6 MM PUR BLUE	
15032:1	90166-0193	MM	450	TUBE 6 MM PUR BLUE	
15034	90166-0193	MM	2600	TUBE 6 MM PUR BLUE	
15034:1	90166-0193	MM	450	TUBE 6 MM PUR BLUE	
18024	90166-0193	MM	2500	TUBE 6 MM PUR BLUE	
18034	90166-0193	MM	2500	TUBE 6 MM PUR BLUE	
18104	90166-0193	MM	3700	TUBE 6 MM PUR BLUE	
300	312105-0366		6	SCREW M6S ISO 4017 M6X12 A480	
310	315237-0109		6	WASHER,PL.RND.AL.10/14,H=1,5	
330	342724-0102		1	CONN. STR. PIPE GI 6-G1/8	
340	342797-0121		1	CONN. BANJO, RINGPIECE 6-1/8	
350	342980-0303		4	BANJO-HOLLOW BOLT COUPL,EXT.THR.01-G1/8	
360	342747-0102		2	CONN. T-PIPE T-6	
370	342748-0109		2	T-CONNECTION 12MM	

Machine Type | Group Description | Used-In | Group Number | Page No

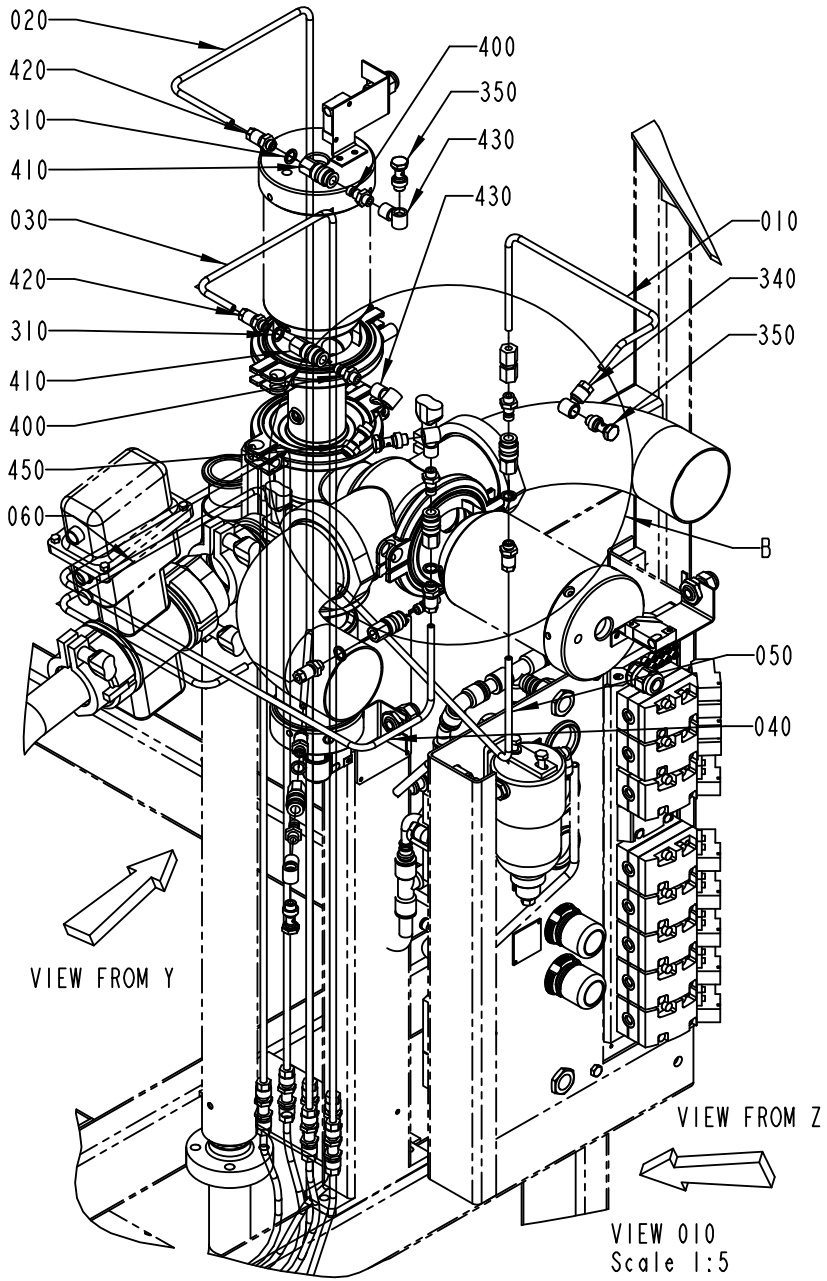

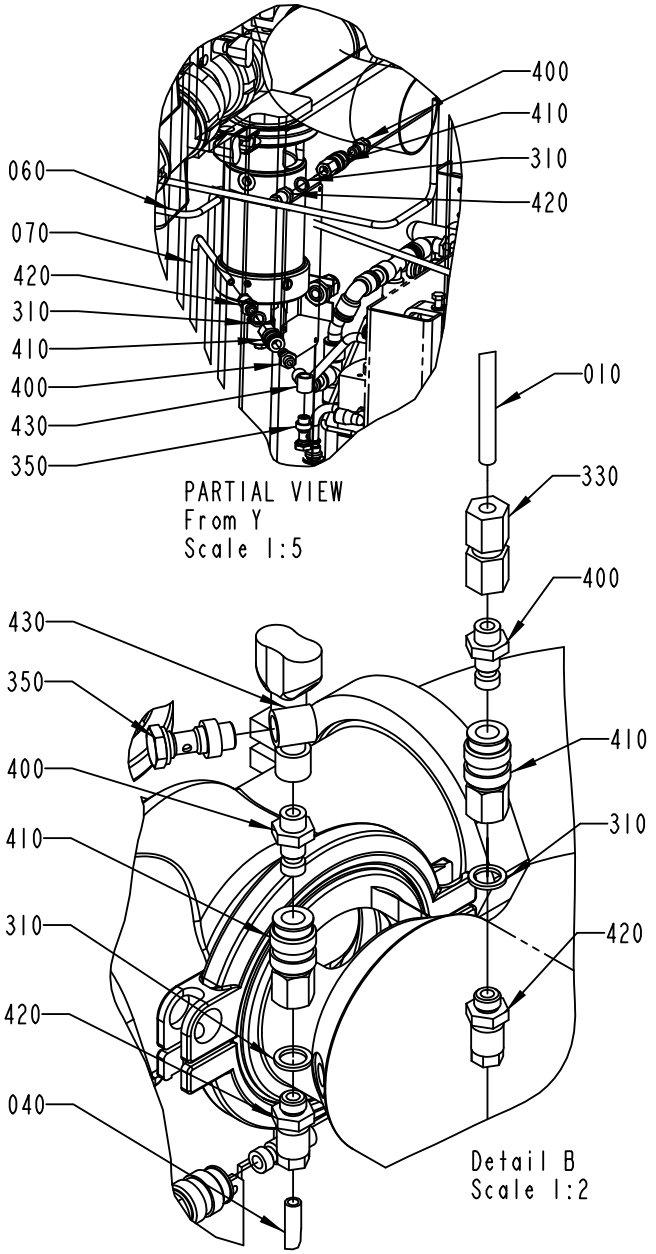

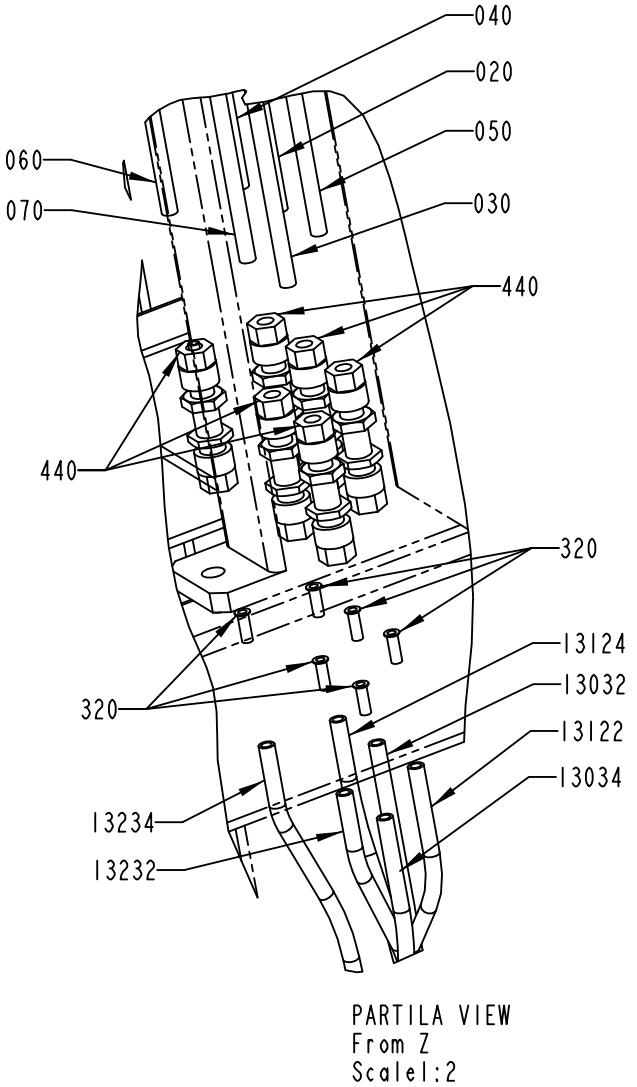

2528080-2
291693

Pos	Part No	UN	Qty	Description	Page No
Common Parts (Cont'd)					
380	342716-0210		1	REDUCER 6-12	
400	90163-0057		6	QUICK COUPLING, (M) 5150-1/8	
410	90163-0062		6	QUICK COUPLING, (F) 5053-1/8	
420	90458-1849		6	CONN. STR., 6-R1/8, EXT. THREAD	
430	90224-0308		4	CONN. BANJO, ART. NO. 2023-1/8-1/8	
450	90235-0274		1	THROTTLE CHECK VALVE, G1/8", SCU-604-1/8	
460	359000-0400		50	WIRE MARKING, YELLOW, PA2/4"0"	
490	359000-0403		50	WIRE MARKING, YELLOW, PA2/4"3"	
510	359000-0405		50	WIRE MARKING, YELLOW, PA2/4"5"	
530	359000-0407		50	WIRE MARKING, YELLOW, PA2/4"7"	
540	359000-0408		50	WIRE MARKING, YELLOW, PA2/4"8"	
550	359000-0409		50	WIRE MARKING, YELLOW, PA2/4"9"	
560	315105-0153		2	WASHER BRB 6,4X12 RFR	
P1	90166-0195	MM	2000	TUBE 12 MM PA BLUE	
P1:1	90166-0193	MM	3500	TUBE 6 MM PUR BLUE	
P1:3	90166-0195	MM	3800	TUBE 12 MM PA BLUE	
P2	90166-0013	MM	3000	TUBE 8 MM PA BLUE	

Pos	Part No	UN	Qty	Description	Page No

HOSE INSTALLATION

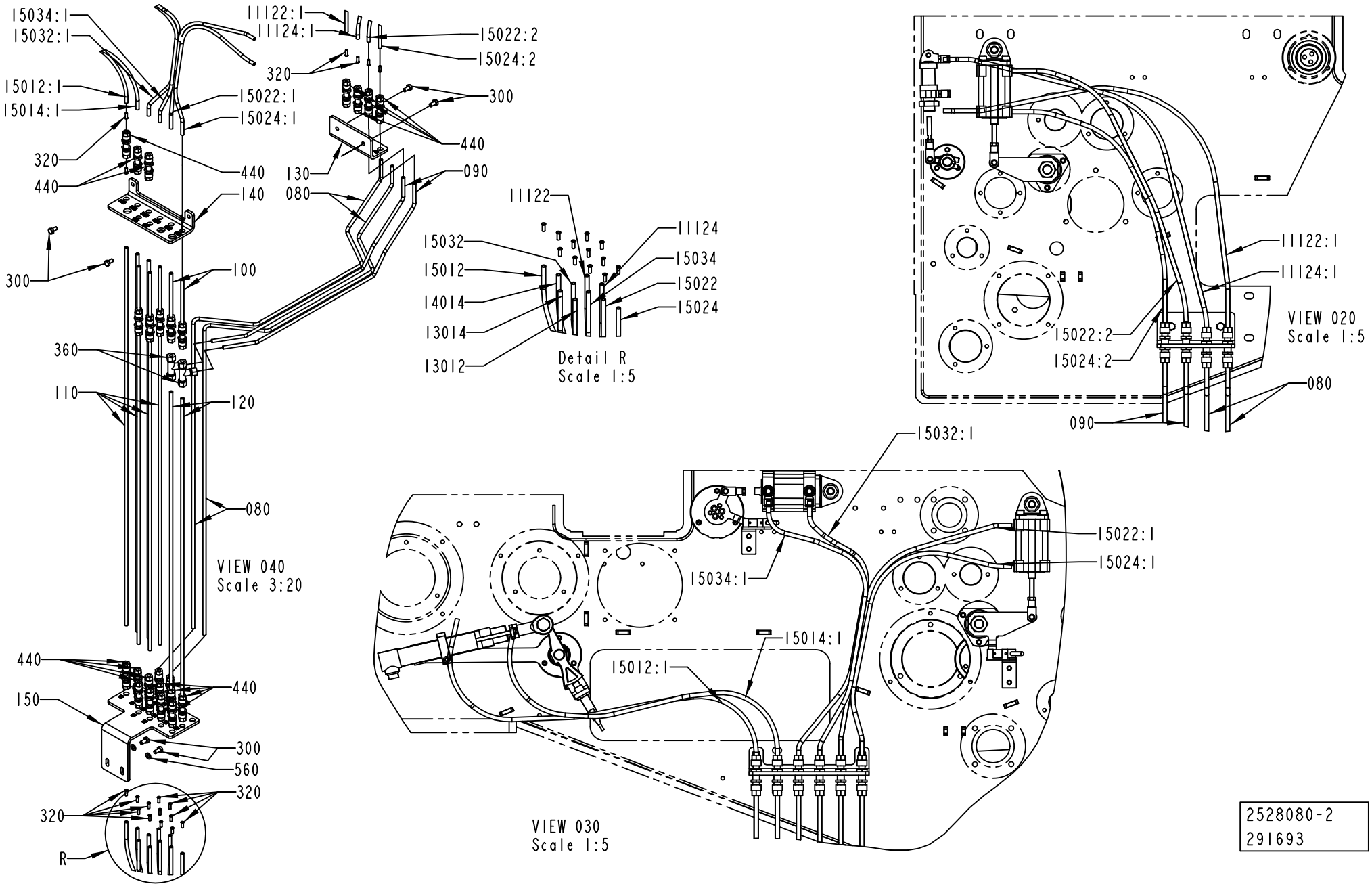

2528080-2
291693

ECM: 401447 - 20091002
Group number: 2528080-0200
Assembly Drawing: 2528080-2_3_AB

This list covers pages from 1-354 to 1-365

Pos	Part No	UN	Qty	Description	Page No
SEE PREVIOUS LISTS PAGES: 1-355, 1-357.					

Pos	Part No	UN	Qty	Description	Page No

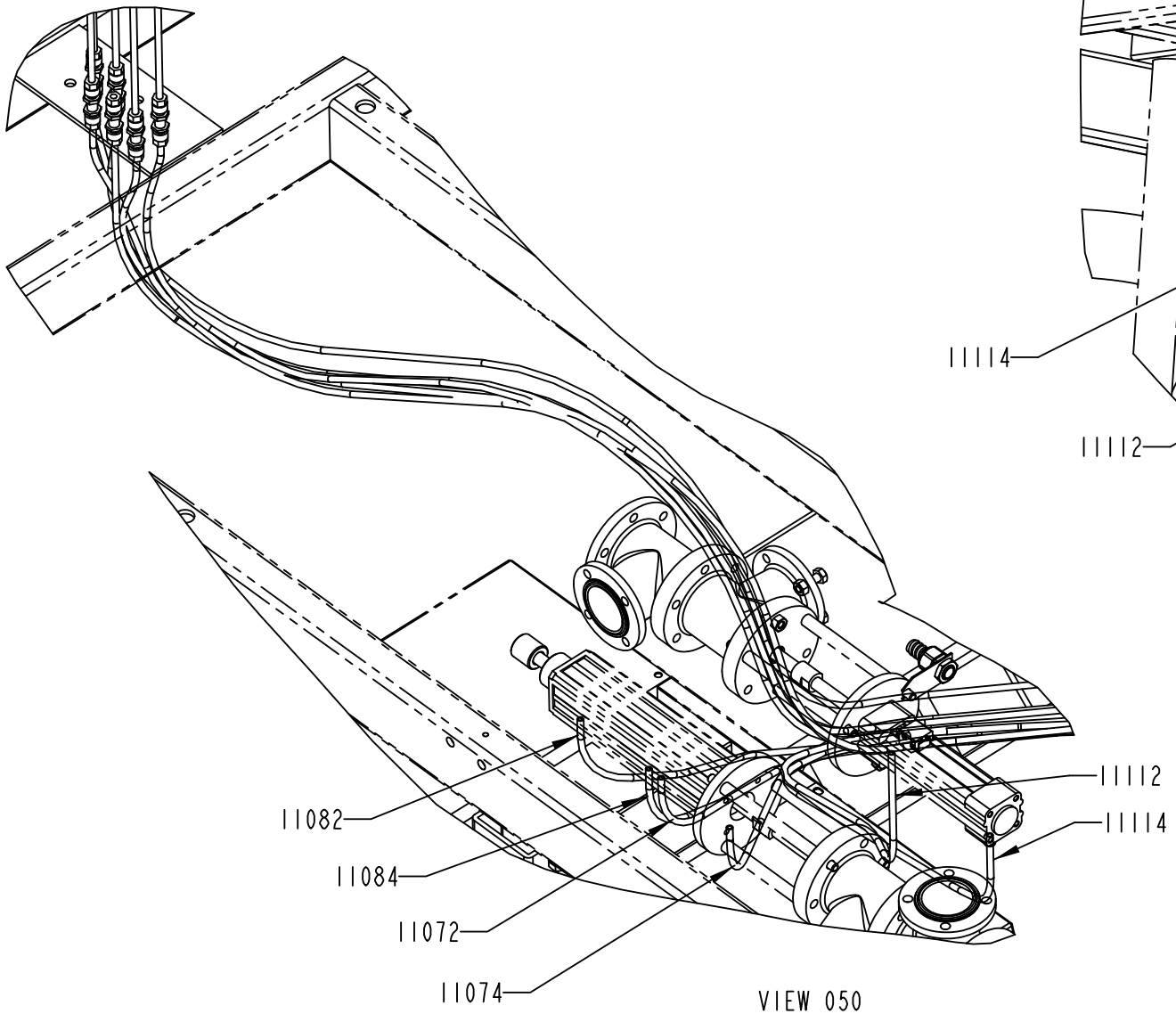

VIEW 050
Scale 1:5

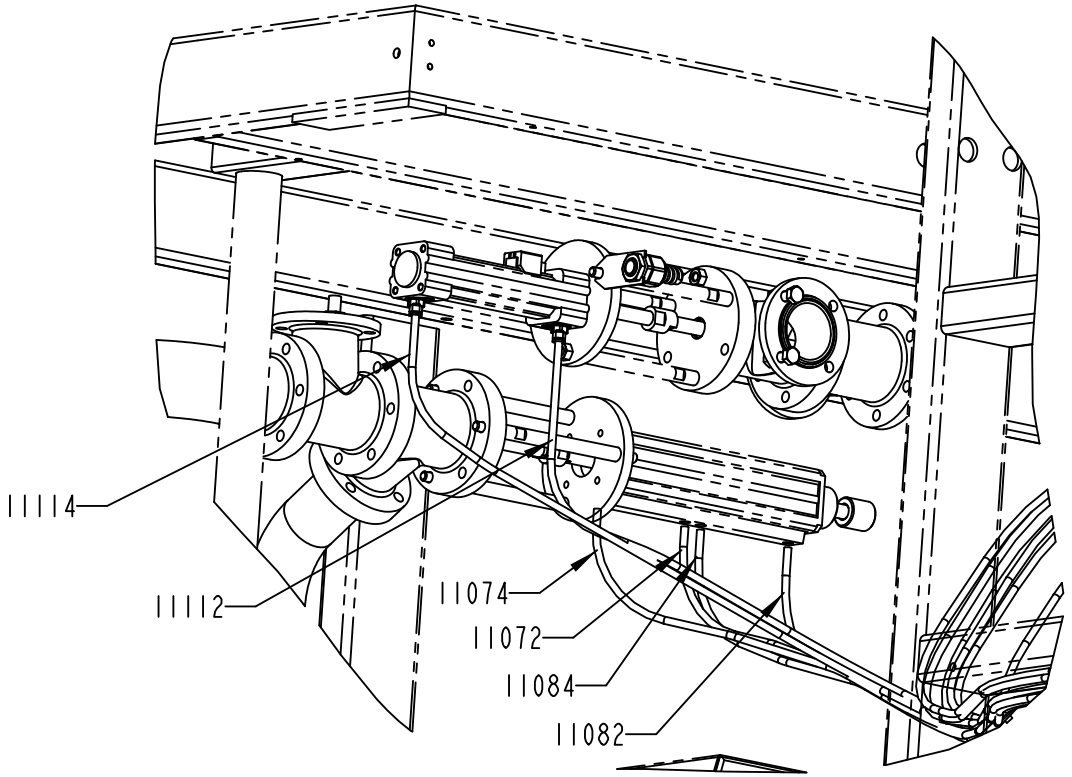

VIEW 060
Scale 1:5

2528080-2
291693

ECM: 401447 - 20091002
Group number: 2528080-0200
Assembly Drawing: 2528080-2_4_AB

This list covers pages from 1-354 to 1-365

Pos	Part No	UN	Qty	Description	Page No
SEE PREVIOUS LISTS PAGES: 1-355, 1-357.					

Pos	Part No	UN	Qty	Description	Page No

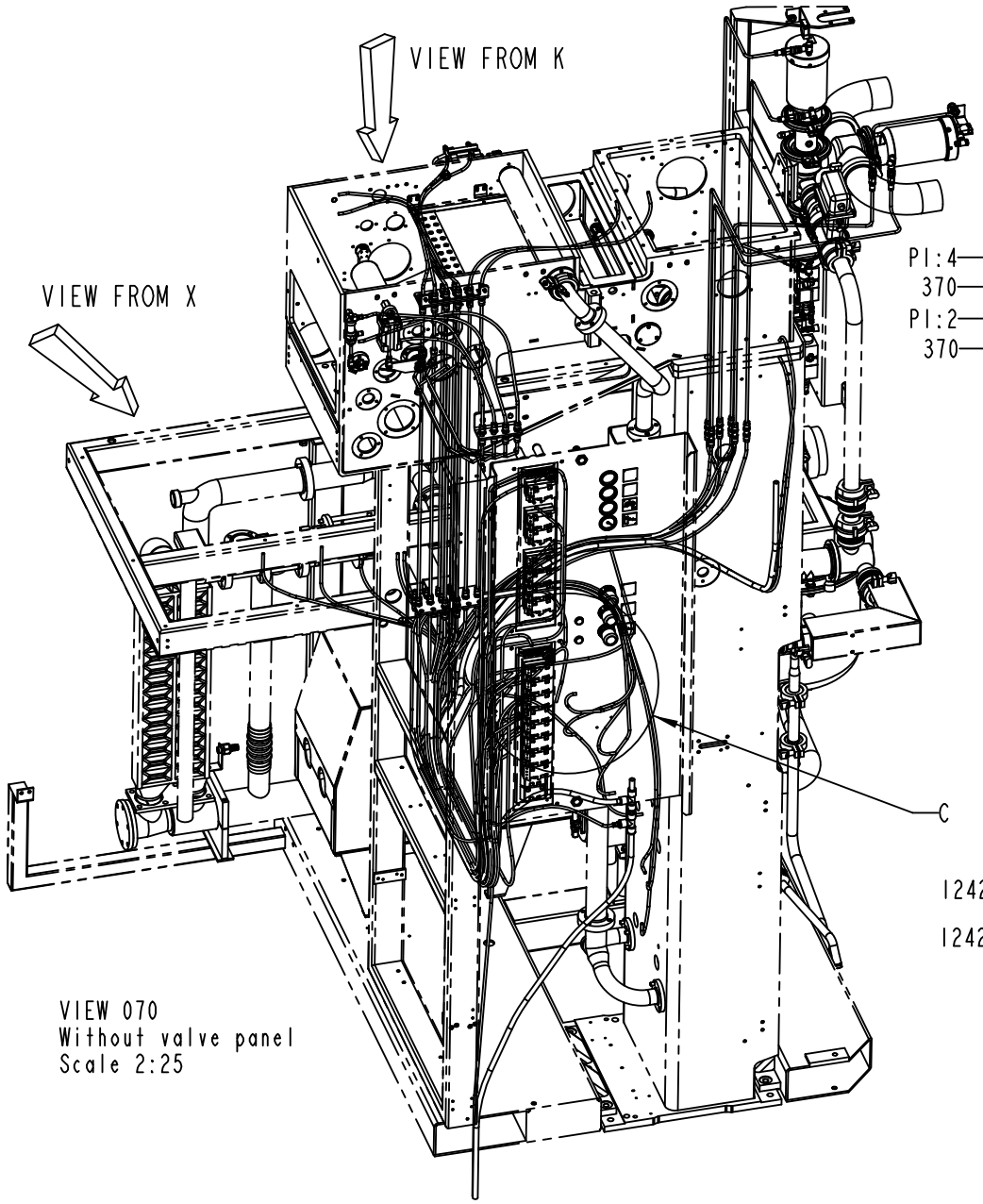

VIEW 070
Without valve panel
Scale 2:25

Valve Panel

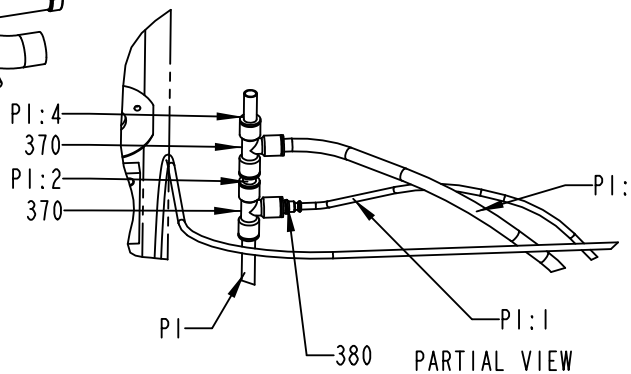

PARTIAL VIEW
From K with valve panel
Sacle 1:5

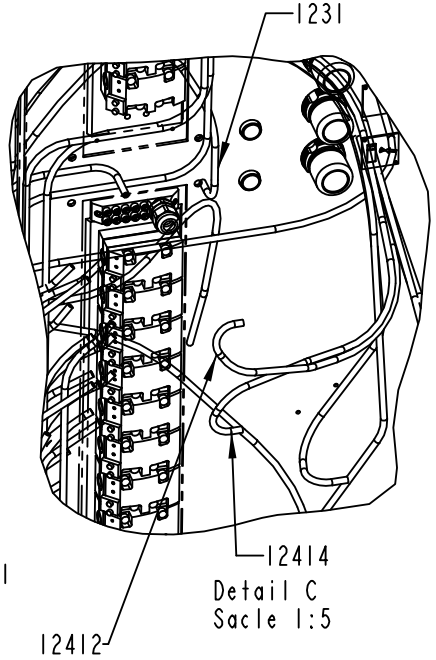

Detail C
Sacle 1:5

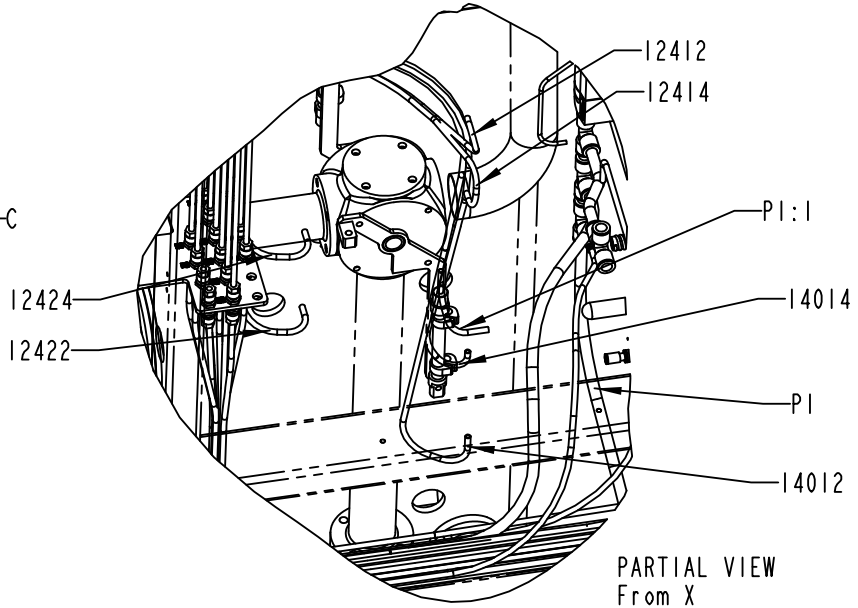

PARTIAL VIEW
From X
Scale 17:100

2528080-2
291693

Pos	Part No	UN	Qty	Description	Page No
SEE PREVIOUS LISTS PAGES: 1-355, 1-357.					

Pos	Part No	UN	Qty	Description	Page No

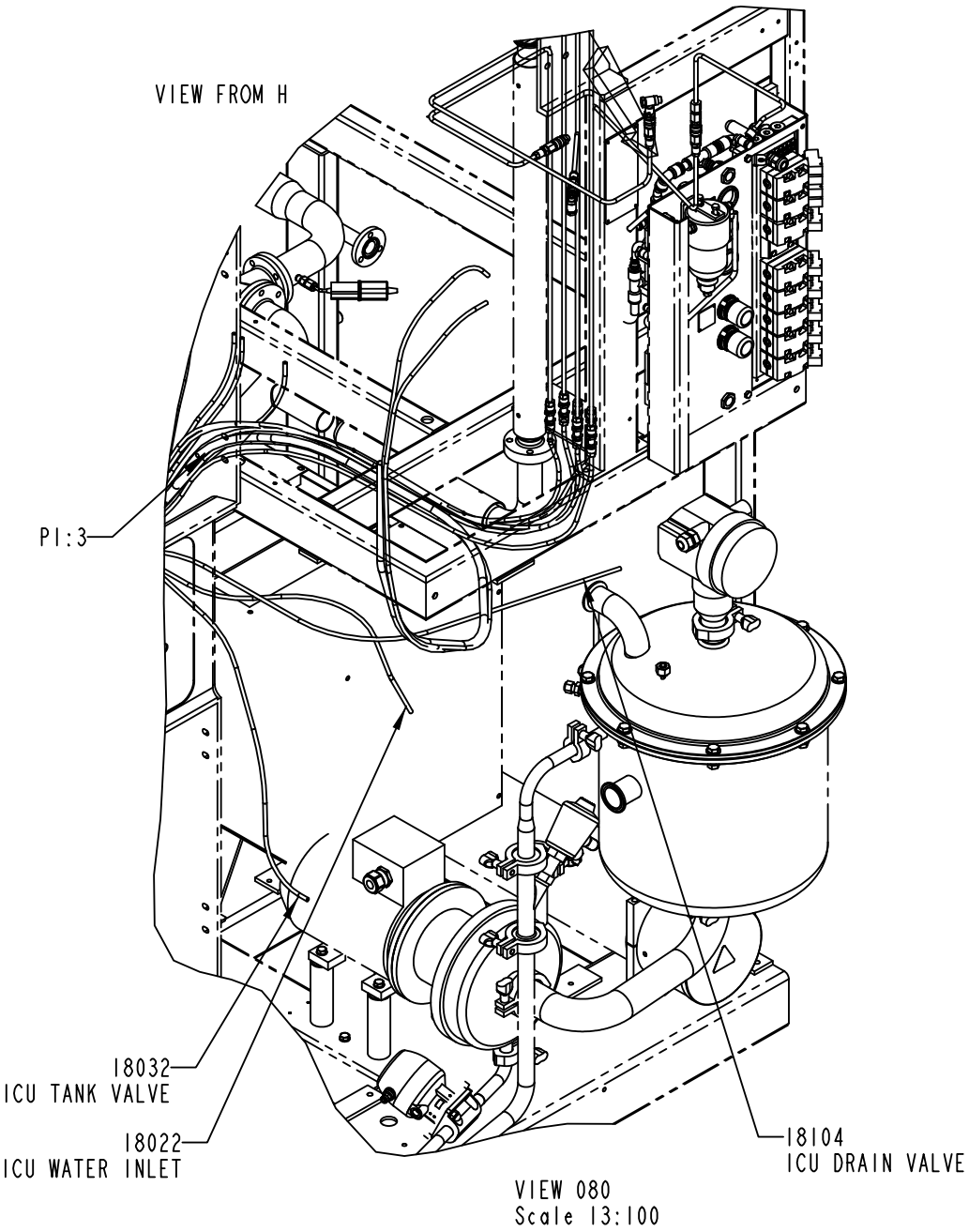

VIEW 080
Scale 13:100

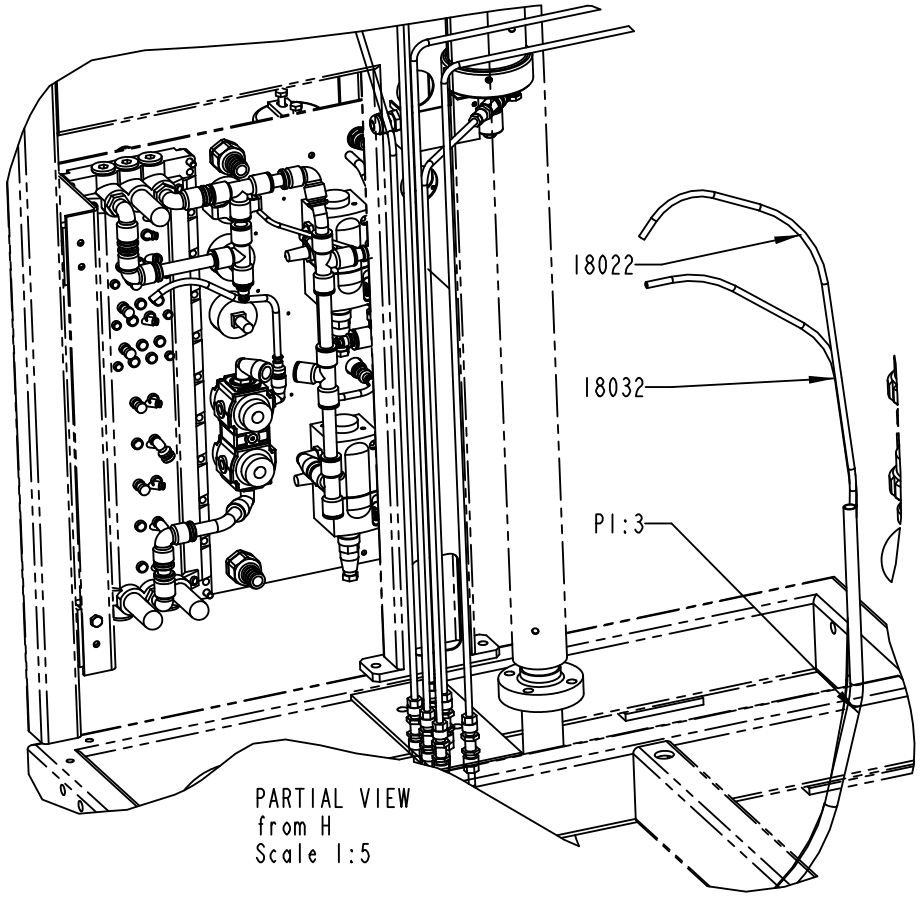

PARTIAL VIEW
from H
Scale 1:5

2528080-2
291693

ECM: 401447 - 20091002
Group number: 2528080-0200
Assembly Drawing: 2528080-2_6_AB

This list covers pages from 1-354 to 1-365

Pos	Part No	UN	Qty	Description	Page No
SEE PREVIOUS LISTS PAGES: 1-355, 1-357.					

Pos	Part No	UN	Qty	Description	Page No

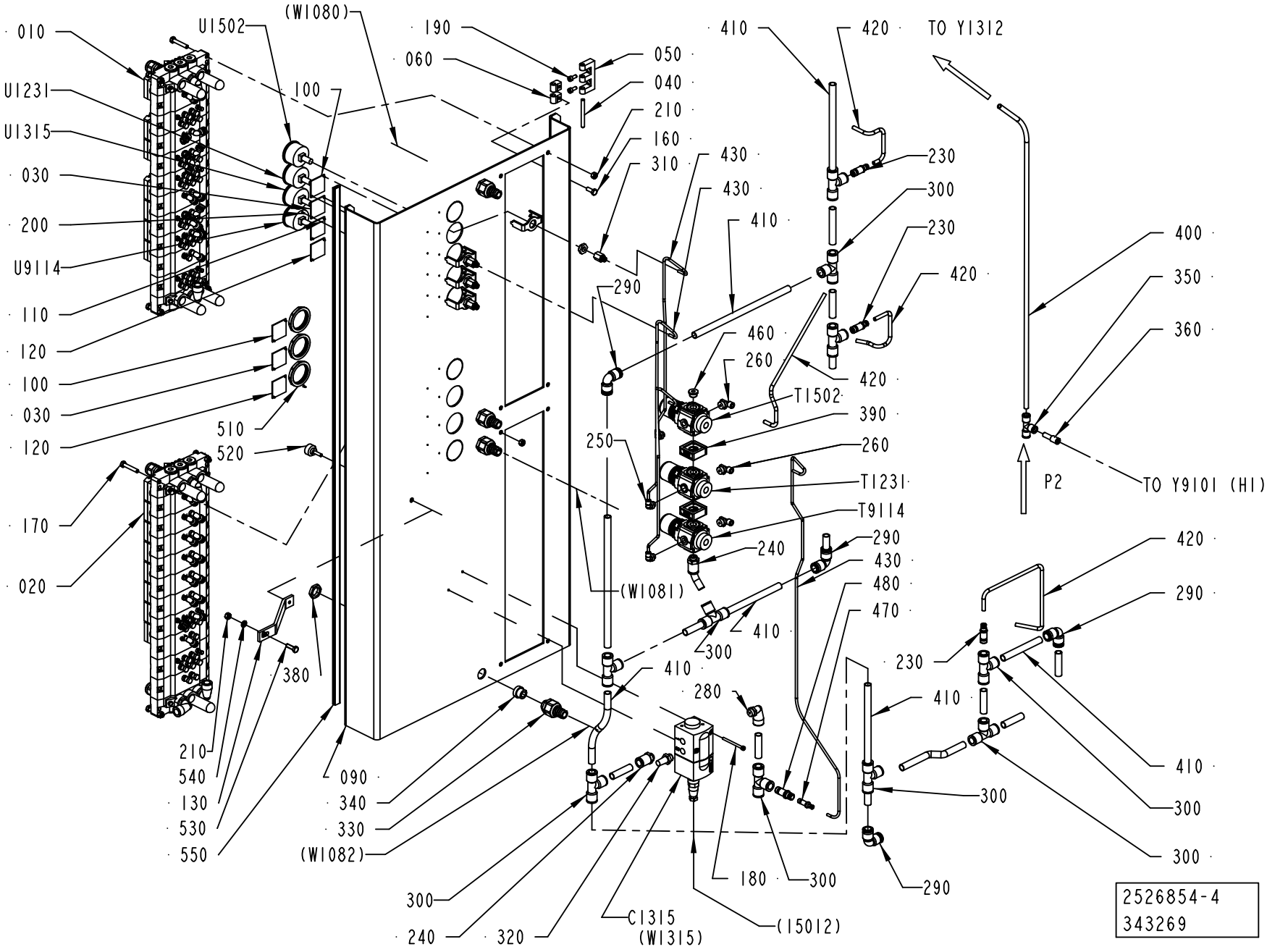
010
U1502
(W1080)
190
060
050
040
210
160
310
430
430
410
420
TO Y1312
U1231
U1315
030
200
U9114
110
120
100
030
120
100
510
520
170
020
290
460
260
T1502
390
250
260
T1231
T9114
240
(W1081)
230
300
230
420
420
400
350
360
P2
TO Y9101 (H1)
290
430
480
470
410
300
380
210
540
130
530
550
090
340
330
(W1082)
300
240
320
C1315
(W1315)
(15012)
180
300
280
410
300
290
420
290
230
410
410
300
300
2526854-4
343269

ECM: 392891 - 20090701
Group number: 2526854-0300
Assembly Drawing: 2526854-4_1_AB

Pos	Part No	UN	Qty	Description	Page No
A3/FLEX HI (See drawing on page: 1-366)					
120	2640822-0000		2	SIGN	
200	312502-0120		14	DRIVE SCREW ROUND HEAD KDS 0X5	
250	90458-2955		3	ELBOW PIPE JOINT, EXT.THREAD,	
260	90458-2957		3	ELBOW PIPE JOINT, EXT.THREAD, D=6MM-G1/4	
310	342770-0101		4	RAIGHT COUPLING INT, D=4 MM - G1/8	
350	342748-0103		1	T-CONNECTION 8MM	
360	350006-0003		1	PUSH-IN FITTING QS-F-8H-6	
390	90113-0140		2	QUICK CLAMP	
400	90166-0013	MM	1000	TUBE 8 MM PA BLUE	
430	90166-0095	MM	4000	TUBE 4 MM PA BLUE (50M)	
510	90457-0078		3	PANEL NUT	
T9114	90113-0469		1	MANIFOLD REGULATOR 4 BAR	
U9114	90043-0065		1	MKC NEW FILL PUMP VACUUM PRESSURE GAUGE	
A3/FLEX NOHI (See drawing on page: 1-366)					
200	312502-0120		10	DRIVE SCREW ROUND HEAD KDS 0X5	
250	90458-2955		2	ELBOW PIPE JOINT, EXT.THREAD,	
260	90458-2957		2	ELBOW PIPE JOINT, EXT.THREAD, D=6MM-G1/4	
310	342770-0101		3	RAIGHT COUPLING INT, D=4 MM - G1/8	
390	90113-0140		1	QUICK CLAMP	
430	90166-0095	MM	4000	TUBE 4 MM PA BLUE (50M)	
510	90457-0078		2	PANEL NUT	
Common Parts					
010	2515324-0100		1	VALVE RAMP	**1-369**
020	2515325-0100		1	VALVE RAMP	**1-371, 1-373**
030	273450-0000		2	SIGN, AIR SPRAY	
040	988685-0000		2	PIN	
050	1035792-0000		2	E-HINGE	
060	1129770-0000		4	BLOCKING PIECE	
090	2715581-0000		1	PLATE	
100	273452-0000		2	SIGN, ROLLING MACHINE FOR FABRICS	
110	1041937-0000		1	SIGN	
130	2736702-0000		1	BRACKET	
150	312105-0291		2	SCREW M6S ISO 4017 M4X12 A470	
160	312105-0368		4	SCREW M6S ISO 4017 M6X16 A480	
170	312109-0376		8	SCREW M6S ISO 4017 M6X35 A480	
180	312115-0305		2	SCREW ISO4762 M4X50 A4 80	
190	312115-0327		4	SCREW ISO4762 M5X12 A4 80	
210	312605-0316		9	HEXAGON NUT, M6M M6 A280	
230	342716-0210		3	REDUCER 6-12	
240	342722-0209		2	STRAIGHT COUPLING D=12-G1/4"	
280	90458-2959		1	ELBOW PIPE JOINT, EXT.THREAD,D=12MM-G1/4	
290	342735-0109		4	ELBOW PIPE JOINT	
300	342748-0109		10	T-CONNECTION 12MM	
320	346800-0110		1	SILENCER FILTER R1/4"	
330	353243-0003		4	HOSE GLAND W/O INSERT PG11 EXTENDED	
340	353249-0011		4	INSERT, SINGLE HOLE, EK 153/11	
380	90099-0117		4	NUT, PR 18,6 (PG11)	
410	90166-0068	MM	5000	TUBE 12 MM PA BLUE	
420	90166-0081	MM	5000	TUBE 6 MM PA BLUE	
460	342713-0210		1	PLUG, EXT THREAD HEX SOCKET	
470	342716-0205		1	REDUCER 4-8	
480	342716-0209		1	REDUCER 8-12	
520	90051-0035		1	KNOB, EXTERNAL THREAD. NO. 8308-1135	
530	312105-0370		1	SCREW M6S ISO 4017 M6X20 A480	
540	315105-0153		1	WASHER BRB 6,4X12 RFR	
550	90143-0097	MM	1100	SELF GRIPPING GASKET, 1011-24	
C1315	90458-1092		1	PROPORTIONAL VALVE 0 - 10V/0-6 BAR	
	90458-1262		*1*	*CONNECTOR 131028001 FOR PROP. VALVE*	
T1231	90113-0469		1	MANIFOLD REGULATOR 4 BAR	
T1502	90113-0470		1	MANIFOLD REGULATOR 10 BAR	
U1231	90043-0065		1	MKC NEW FILL PUMP VACUUM PRESSURE GAUGE	
U1315	90043-0065		1	MKC NEW FILL PUMP VACUUM PRESSURE GAUGE	
U1502	90043-0065		1	MKC NEW FILL PUMP VACUUM PRESSURE GAUGE	

Machine Type | Group Description | Used-In | Group Number | Page No

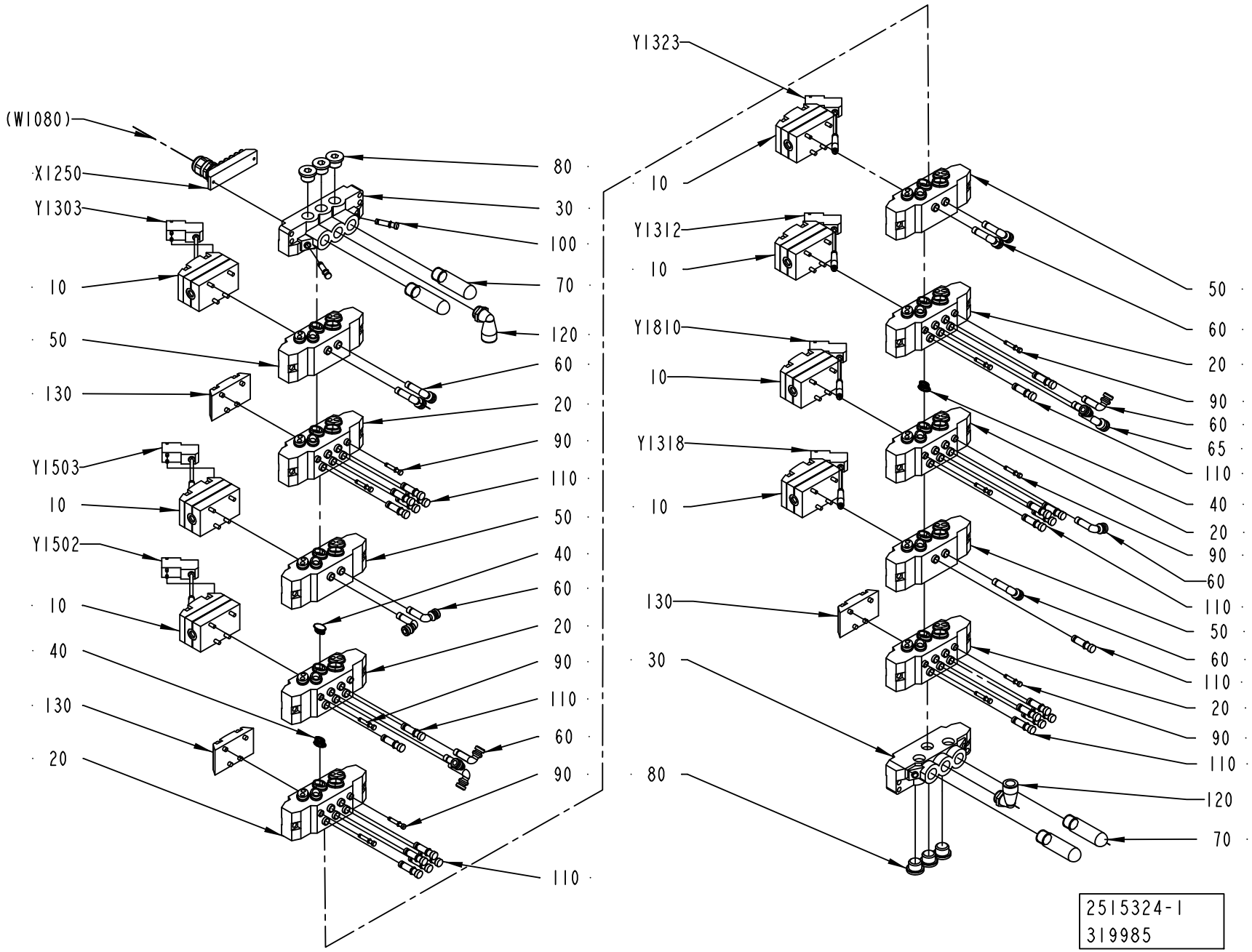
(W1080)
X1250
Y1303
10
50
130
Y1503
10
Y1502
10
40
130
20
80
30
100
70
120
60
20
90
110
50
40
60
20
90
110
60
90
110
Y1323
10
Y1312
10
Y1810
10
Y1318
10
130
30
80
50
60
20
90
60
65
110
40
20
90
60
110
50
60
110
20
90
110
120
70
2515324-1
319985

ECM: 333708 - 20080401
Group number: 2515324-0100
Assembly Drawing: 2515324-1_1_AE

Pos	Part No	UN	Qty	Description	Page No
A3/FLEX					
010	90042-0215		7	VALVE BODY 5/2 UNISTABLE	
040	90042-0528		3	BLANKING KIT SEALS ISO SIZE 1	
060	90055-0143		13	HOSE,ELBOW 90 COUPLING,FPT,6X8MM	
110	342715-0103		24	BLIND PLUG 8 MM	
130	90042-0519		3	BLANK PLATE ISO SIZE 1	
Common Parts					
020	90042-0520		6	BASE PLATE ISO SIZE 1	
030	90042-0522		2	PORTED END PIECE ISO SIZE 1	
050	90042-0532		4	BASE PLATE ISO SIZE 1	
065	90055-0172		1	ELBOW WITH TAILPIECE 8/8 MM	
070	90328-0024		4	SILENCER G3/8"	
080	342713-0211		6	PLUG, EXT THREAD HEX SOCKET 8638-00-380	
090	342715-0100		11	BLIND PLUG 4 MM	
100	342715-0102		2	BLIND PLUG 6 MM	
120	90458-2960		2	ELBOW PIPE JOINT, EXT.THREAD,D=12MM-G3/8	
X1250	90042-0535		1	TERMINAL BOARD 19 CORDS	
Y1303	90042-0538		1	PILOT VALVE L=500MM	
Y1312	90042-0538		1	PILOT VALVE L=500MM	
Y1318	90042-0538		1	PILOT VALVE L=500MM	
Y1323	90042-0538		1	PILOT VALVE L=500MM	
Y1502	90042-0538		1	PILOT VALVE L=500MM	
Y1503	90042-0538		1	PILOT VALVE L=500MM	
Y1810	90042-0538		1	PILOT VALVE L=500MM	

Pos	Part No	UN	Qty	Description	Page No

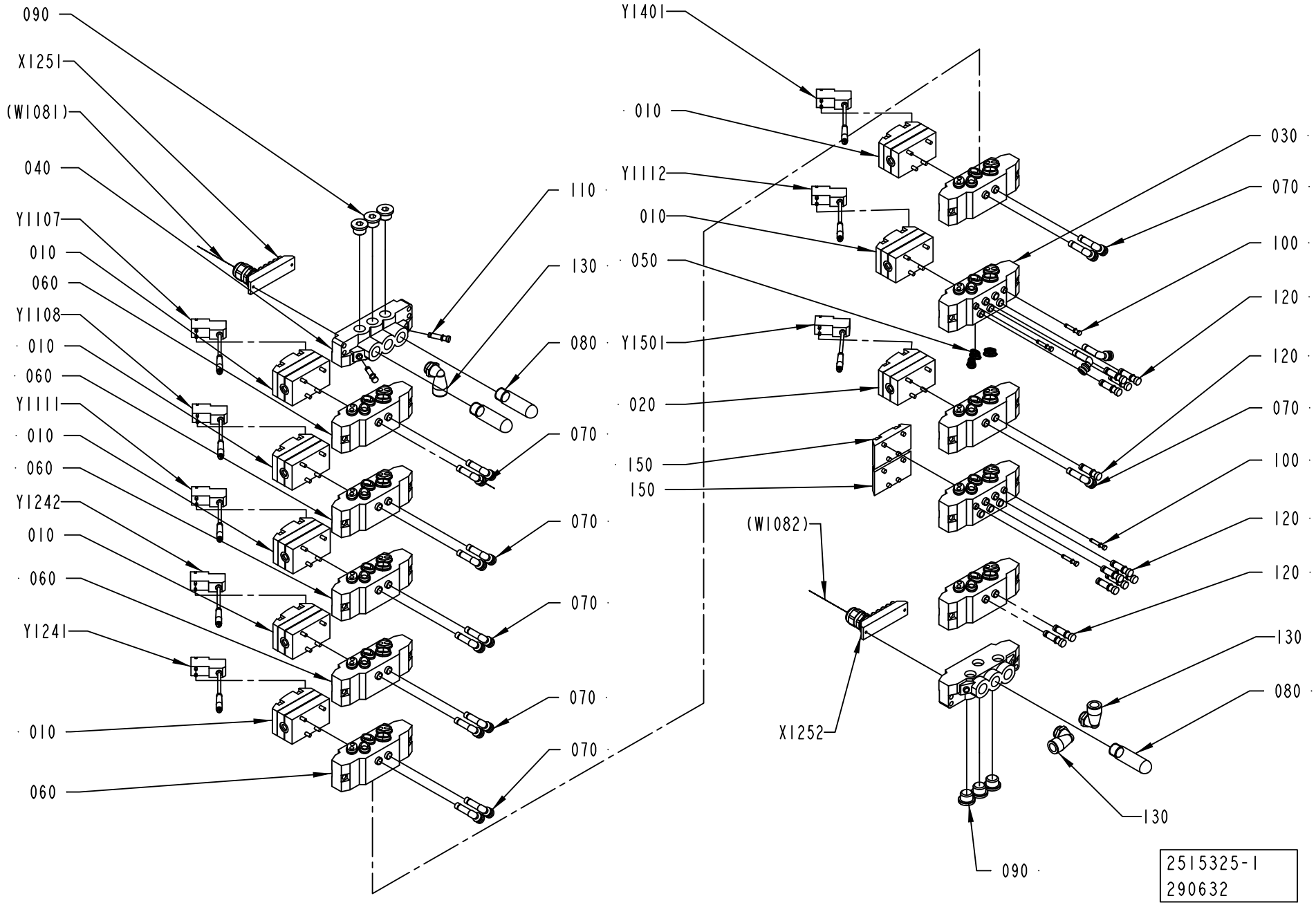
090
X1251
(W1081)
040
Y1107
010
060
Y1108
010
060
Y1111
010
060
Y1242
010
060
Y1241
010
060
110
130
080
070
070
070
070
070
Y1401
010
Y1112
010
050
Y1501
020
150
150
(W1082)
X1252
030
070
100
120
120
070
100
120
120
130
080
130
090
2515325-1
290632

ECM: 301754 - 20070402
Group number: 2515325-0100
Assembly Drawing: 2515325-1_1_AD

This list covers pages from 1-370 to 1-373

Pos	Part No	UN	Qty	Description	Page No
HI (See drawing on page: 1-372)					
020	90042-0271		2	VALVE BODY 2X3/2	
070	90055-0143		16	HOSE,ELBOW 90 COUPLING,FPT,6X8MM	
120	342715-0103		10	BLIND PLUG 8 MM	
150	90042-0519		1	BLANK PLATE ISO SIZE 1	
Y9105	90042-0538		1	PILOT VALVE L=500MM	
Y9106	90042-0538		1	PILOT VALVE L=500MM	
NOHI (See drawing on page: 1-370)					
020	90042-0271		1	VALVE BODY 2X3/2	
070	90055-0143		14	HOSE,ELBOW 90 COUPLING,FPT,6X8MM	
120	342715-0103		12	BLIND PLUG 8 MM	
150	90042-0519		2	BLANK PLATE ISO SIZE 1	
Common Parts					
010	90042-0215		7	VALVE BODY 5/2 UNISTABLE	
030	90042-0520		2	BASE PLATE ISO SIZE 1	
040	90042-0522		2	PORTED END PIECE ISO SIZE 1	
050	90042-0528		3	BLANKING KIT SEALS ISO SIZE 1	
060	90042-0532		8	BASE PLATE ISO SIZE 1	
080	90328-0024		3	SILENCER G3/8"	
090	342713-0211		6	PLUG, EXT THREAD HEX SOCKET 8638-00-380	
100	342715-0100		4	BLIND PLUG 4 MM	
110	342715-0102		2	BLIND PLUG 6 MM	
130	90458-2960		3	ELBOW PIPE JOINT, EXT.THREAD,D=12MM-G3/8	
X1251	90042-0535		1	TERMINAL BOARD 19 CORDS	
X1252	90042-0535		1	TERMINAL BOARD 19 CORDS	
Y1107	90042-0538		1	PILOT VALVE L=500MM	
Y1108	90042-0538		1	PILOT VALVE L=500MM	
Y1111	90042-0538		1	PILOT VALVE L=500MM	
Y1112	90042-0538		1	PILOT VALVE L=500MM	
Y1241	90042-0538		1	PILOT VALVE L=500MM	
Y1242	90042-0538		1	PILOT VALVE L=500MM	
Y1401	90042-0538		1	PILOT VALVE L=500MM	
Y1501	90042-0538		1	PILOT VALVE L=500MM	

Pos	Part No	UN	Qty	Description	Page No

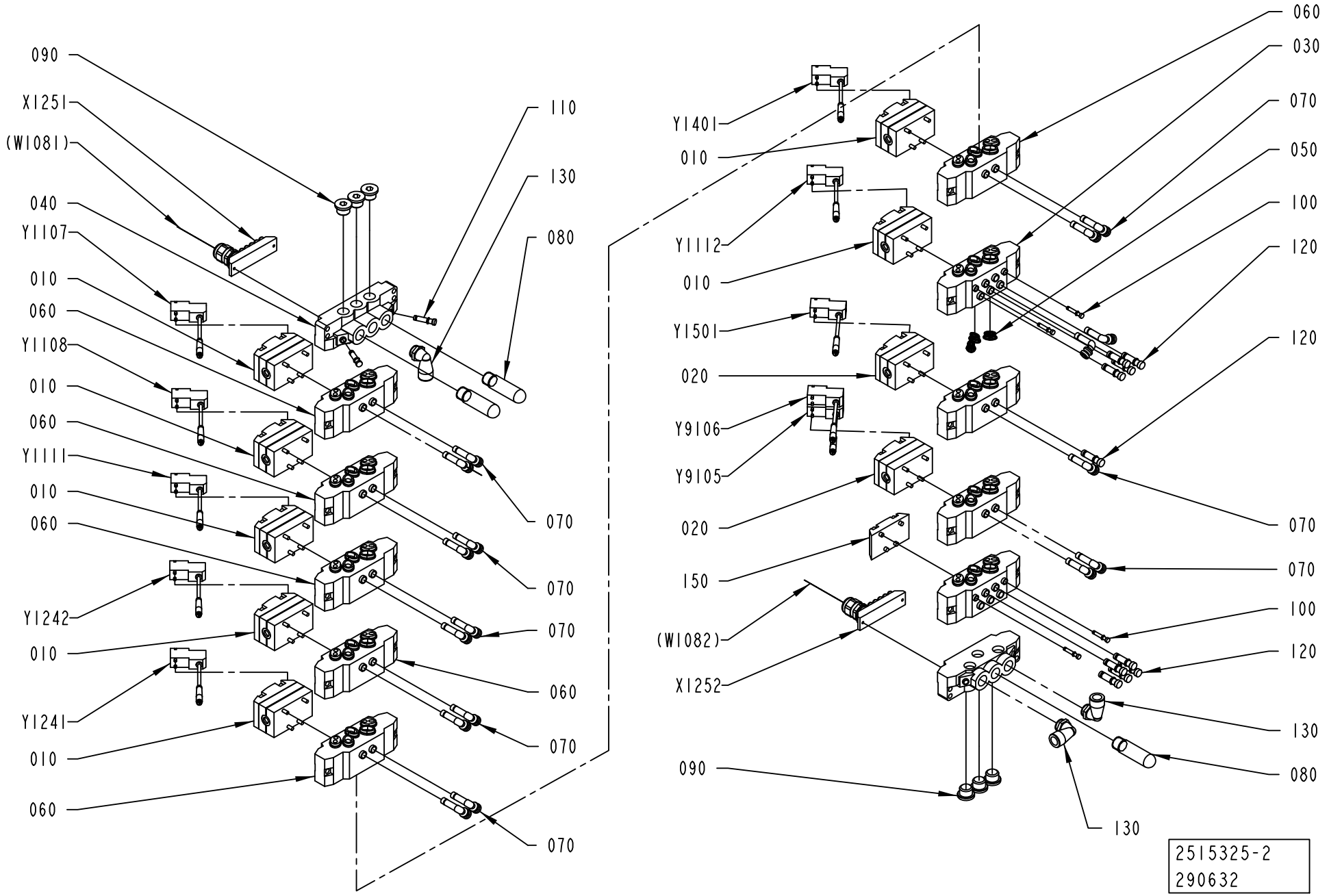
090
X1251
(W1081)
040
Y1107
010
060
Y1108
010
060
Y1111
010
060
Y1242
010
Y1241
010
060
110
130
080
070
070
070
060
070
070
Y1401
010
Y1112
010
Y1501
020
Y9106
Y9105
020
150
(W1082)
X1252
090
130
060
030
070
050
100
120
120
070
070
100
120
130
080
2515325-2
290632

ECM: 301754 - 20070402
Group number: 2515325-0100
Assembly Drawing: 2515325-2_1_AC

This list covers pages from 1-370 to 1-373

Pos	Part No	UN	Qty	Description	Page No
HI (See drawing on page: 1-372)					
020	90042-0271		2	VALVE BODY 2X3/2	
070	90055-0143		16	HOSE,ELBOW 90 COUPLING,FPT,6X8MM	
120	342715-0103		10	BLIND PLUG 8 MM	
150	90042-0519		1	BLANK PLATE ISO SIZE 1	
Y9105	90042-0538		1	PILOT VALVE L=500MM	
Y9106	90042-0538		1	PILOT VALVE L=500MM	
NOHI (See drawing on page: 1-370)					
020	90042-0271		1	VALVE BODY 2X3/2	
070	90055-0143		14	HOSE,ELBOW 90 COUPLING,FPT,6X8MM	
120	342715-0103		12	BLIND PLUG 8 MM	
150	90042-0519		2	BLANK PLATE ISO SIZE 1	
Common Parts					
010	90042-0215		7	VALVE BODY 5/2 UNISTABLE	
030	90042-0520		2	BASE PLATE ISO SIZE 1	
040	90042-0522		2	PORTED END PIECE ISO SIZE 1	
050	90042-0528		3	BLANKING KIT SEALS ISO SIZE 1	
060	90042-0532		8	BASE PLATE ISO SIZE 1	
080	90328-0024		3	SILENCER G3/8"	
090	342713-0211		6	PLUG, EXT THREAD HEX SOCKET 8638-00-380	
100	342715-0100		4	BLIND PLUG 4 MM	
110	342715-0102		2	BLIND PLUG 6 MM	
130	90458-2960		3	ELBOW PIPE JOINT, EXT.THREAD,D=12MM-G3/8	
X1251	90042-0535		1	TERMINAL BOARD 19 CORDS	
X1252	90042-0535		1	TERMINAL BOARD 19 CORDS	
Y1107	90042-0538		1	PILOT VALVE L=500MM	
Y1108	90042-0538		1	PILOT VALVE L=500MM	
Y1111	90042-0538		1	PILOT VALVE L=500MM	
Y1112	90042-0538		1	PILOT VALVE L=500MM	
Y1241	90042-0538		1	PILOT VALVE L=500MM	
Y1242	90042-0538		1	PILOT VALVE L=500MM	
Y1401	90042-0538		1	PILOT VALVE L=500MM	
Y1501	90042-0538		1	PILOT VALVE L=500MM	

Pos	Part No	UN	Qty	Description	Page No

VALVE PANEL

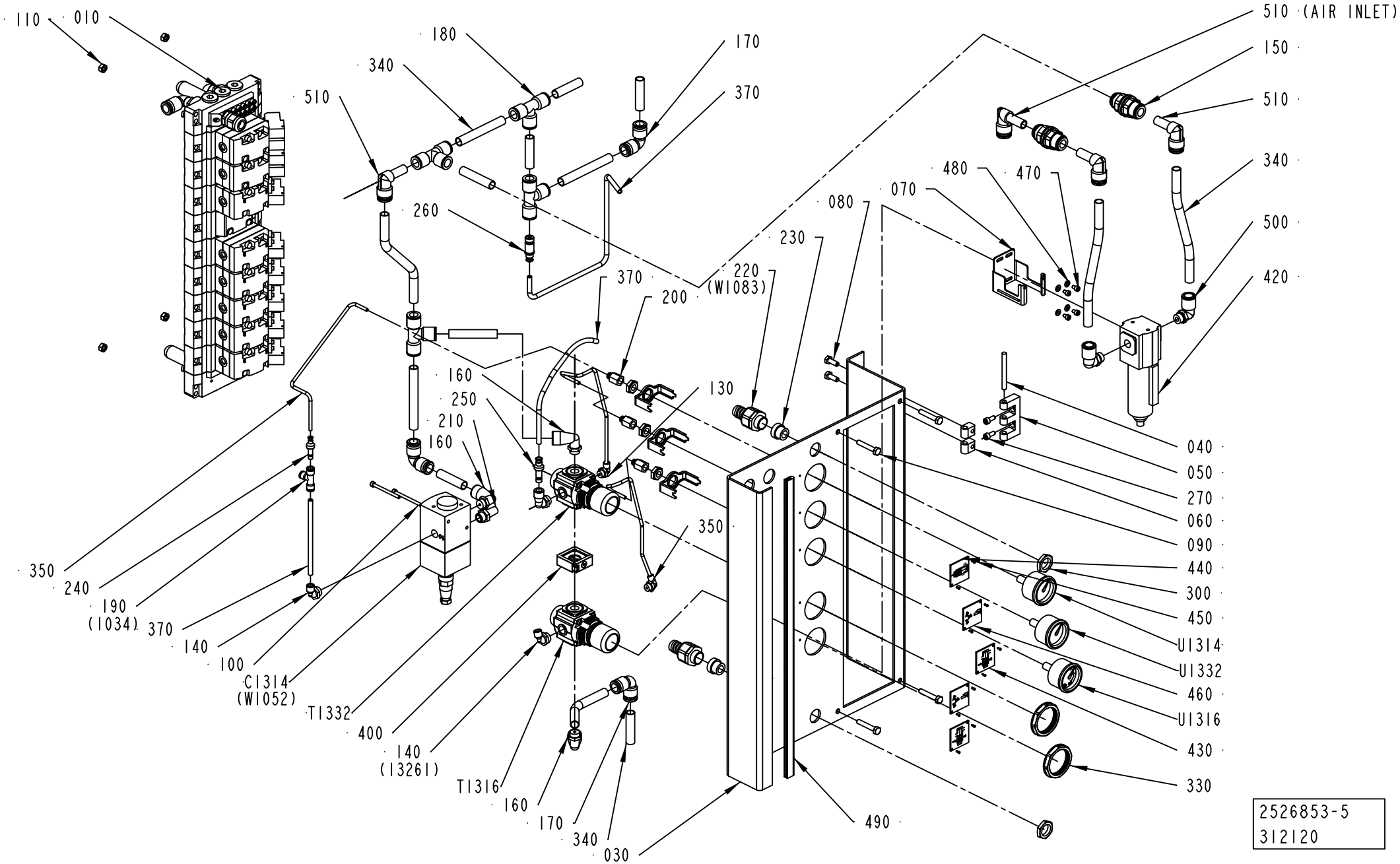

2526853-5
312120

ECM: 387768 - 20090402
Group number: 2526853-0400
Assembly Drawing: 2526853-5_1_AB

Pos	Part No	UN	Qty	Description	Page No
-					
010	2515323-0100		1	VALVE RAMP	**1-377, 1-379**
030	2790434-0000		1	PLATE	
040	988685-0000		2	PIN	
050	1035792-0000		2	E-HINGE	
060	1129770-0000		4	BLOCKING PIECE	
070	90459-7110		1	BRACKET, 4224-50	
080	312105-0368		4	SCREW M6S ISO 4017 M6X16 A480	
090	312109-0376		4	SCREW M6S ISO 4017 M6X35 A480	
100	312115-0305		2	SCREW ISO4762 M4X50 A4 80	
110	312605-0316		4	HEXAGON NUT, M6M M6 A280	
130	90458-2955		2	ELBOW PIPE JOINT, EXT.THREAD,	
13261	90166-0081	MM	2000	TUBE 6 MM PA BLUE	
140	90458-2957		2	ELBOW PIPE JOINT, EXT.THREAD, D=6MM-G1/4	
150	90458-2602		2	BULKHEAD CONNECTOR, 12 MM	
160	90458-2959		3	ELBOW PIPE JOINT, EXT.THREAD,D=12MM-G1/4	
170	342735-0109		3	ELBOW PIPE JOINT	
180	342748-0109		4	T-CONNECTION 12MM	
190	342748-0102		1	T-CONNECTION 6MM	
200	342770-0101		3	RAIGHT COUPLING INT, D=4 MM - G1/8	
210	346800-0110		1	SILENCER FILTER R1/4"	
220	353243-0003		2	HOSE GLAND W/O INSERT PG11 EXTENDED	
230	353249-0011		2	INSERT, SINGLE HOLE, EK 153/11	
240	342716-0202		1	REDUCER 4-6	
250	342716-0203		1	REDUCER 6-8	
260	342716-0210		1	REDUCER 6-12	
270	312115-0327		4	SCREW ISO4762 M5X12 A4 80	
280	90458-2958		1	ELBOW PIPE JOINT, EXT.THREAD, D=8MM-G1/4	
300	90099-0117		2	NUT, PR 18,6 (PG11)	
330	90457-0078		2	PANEL NUT	
340	90166-0068	MM	1500	TUBE 12 MM PA BLUE	
350	90166-0095	MM	900	TUBE 4 MM PA BLUE (50M)	
370	90166-0081	MM	900	TUBE 6 MM PA BLUE	
400	90113-0140		1	QUICK CLAMP	
420	90113-0472		1	FILTER 0,01 MICRON, F72C-2GD-AEO	
	90113-0471		*1*	*FILTER ELEMENT COALESCING, F72C-5925-09*	
430	1548001-0000		2	SIGN	
440	2672942-0000		1	SYMBOLSIGN	
450	312502-0120		10	DRIVE SCREW ROUND HEAD KDS 0X5	
460	2634917-0000		2	SIGN	
470	312115-0285		4	SCREW ISO4762 M4X6 A4 80	
480	315106-0136		4	WASHER ISO 7089-4-200 HV A4	
490	90143-0059	MM	480	SELF GRIPPING GASKET, 4610069	
500	350002-0011		2	PUSH-IN L-FITTING QSL-F-G1/4-12	
510	90459-1825		4	ELBOW WITH TAILPIECE 12/12 MM	
C1314	90458-1092		1	PROPORTIONAL VALVE 0 - 10V/0-6 BAR	
	90458-1262		*1*	*CONNECTOR 131028001 FOR PROP. VALVE*	
T1316	90457-0144		1	REGULATOR 0,3-2 BAR	
T1332	90113-0469		1	MANIFOLD REGULATOR 4 BAR	
U1314	90043-0065		1	MKC NEW FILL PUMP VACUUM PRESSURE GAUGE	
U1316	90459-4991		1	PRESSURE GAUGE, 9063064 D=40 MM	
U1332	90043-0065		1	MKC NEW FILL PUMP VACUUM PRESSURE GAUGE	

Machine Type | Group Description | Used-In | Group Number | Page No

VALVE RAMP

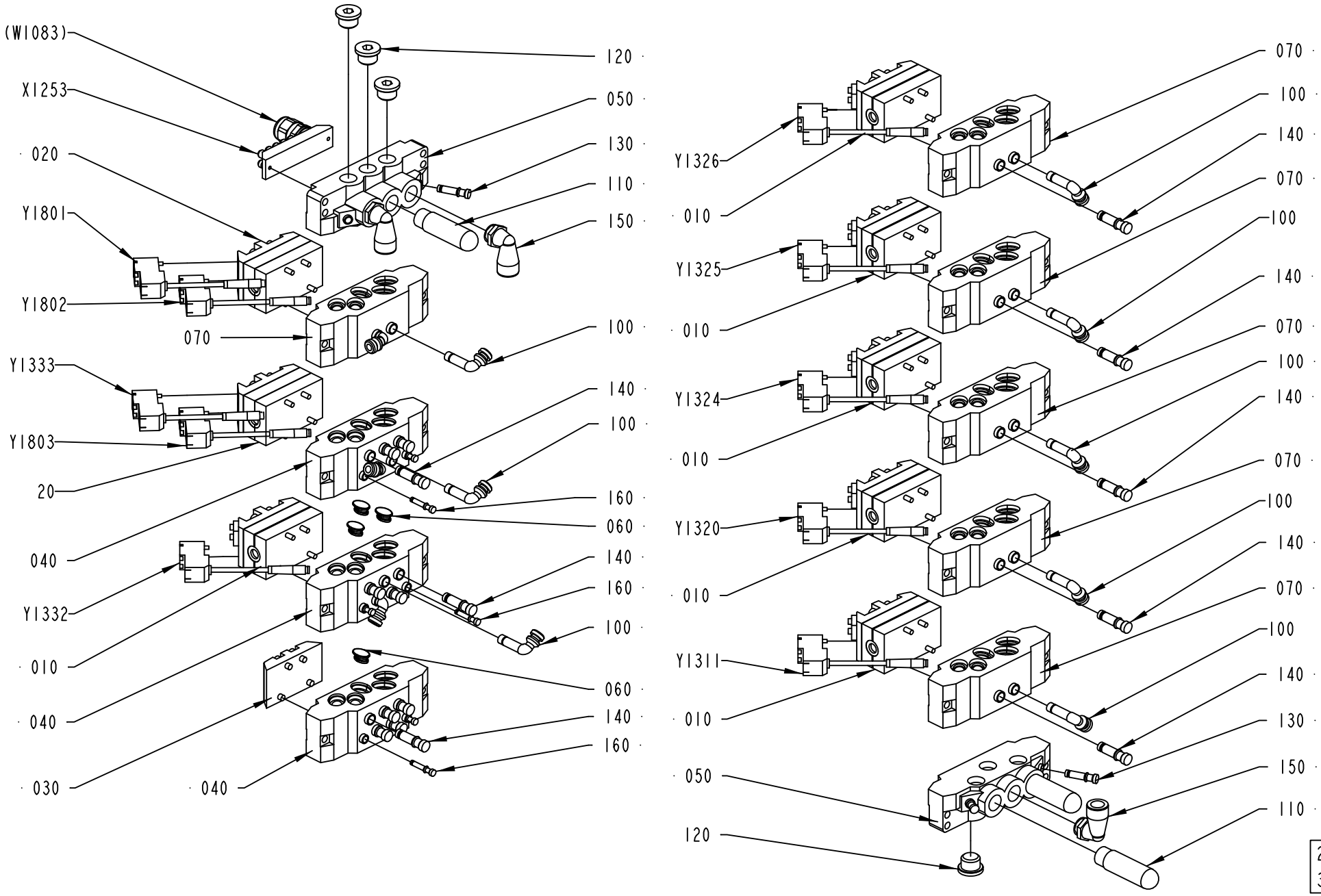
(W1083)
X1253
020
Y1801
Y1802
070
Y1333
Y1803
20
040
Y1332
010
040
030
040
120
050
130
110
150
100
140
100
160
060
140
160
100
060
140
160
070
100
140
070
Y1326
010
Y1325
010
Y1324
010
Y1320
010
Y1311
010
050
120
070
100
140
070
100
140
070
100
140
070
100
140
070
100
140
130
150
110
2515323-1
319985

ECM: 344546 - 20080701
Group number: 2515323-0100
Assembly Drawing: 2515323-1_1_AD

This list covers pages from 1-376 to 1-379

Pos	Part No	UN	Qty	Description	Page No
A3/FLEX AUTOMCIP (See drawing on page: 1-376)					
010	90042-0215		6	VALVE BODY 5/2 UNISTABLE	
030	90042-0519		1	BLANK PLATE ISO SIZE 1	
100	90055-0143		11	HOSE,ELBOW 90 COUPLING,FPT,6X8MM	
140	342715-0103		16	BLIND PLUG 8 MM	
Y1311	90042-0538		1	PILOT VALVE L=500MM	
Y1320	90042-0538		1	PILOT VALVE L=500MM	
Y1324	90042-0538		1	PILOT VALVE L=500MM	
Y1325	90042-0538		1	PILOT VALVE L=500MM	
Y1326	90042-0538		1	PILOT VALVE L=500MM	
Y1801	90042-0538		1	PILOT VALVE L=500MM	
Y1802	90042-0538		1	PILOT VALVE L=500MM	
Y1803	90042-0538		1	PILOT VALVE L=500MM	
A3/FLEX MANUALCIP (See drawing on page: 1-378)					
010	90042-0215		1	VALVE BODY 5/2 UNISTABLE	
030	90042-0519		6	BLANK PLATE ISO SIZE 1	
100	90055-0143		6	HOSE,ELBOW 90 COUPLING,FPT,6X8MM	
140	342715-0103		21	BLIND PLUG 8 MM	
Y1801	90042-0538		1	PILOT VALVE L=500MM	
Y1802	90042-0538		1	PILOT VALVE L=500MM	
Y1803	90042-0538		1	PILOT VALVE L=500MM	
Common Parts					
020	90042-0271		2	VALVE BODY 2X3/2	
040	90042-0520		3	BASE PLATE ISO SIZE 1	
050	90042-0522		2	PORTED END PIECE ISO SIZE 1	
060	90042-0528		4	BLANKING KIT SEALS ISO SIZE 1	
070	90042-0532		6	BASE PLATE ISO SIZE 1	
110	90328-0024		3	SILENCER G3/8"	
120	342713-0211		6	PLUG, EXT THREAD HEX SOCKET 8638-00-380	
130	342715-0102		3	BLIND PLUG 6 MM	
150	90458-2960		3	ELBOW PIPE JOINT, EXT.THREAD,D=12MM-G3/8	
160	342715-0100		6	BLIND PLUG 4 MM	
X1253	90042-0535		1	TERMINAL BOARD 19 CORDS	
Y1332	90042-0538		1	PILOT VALVE L=500MM	
Y1333	90042-0538		1	PILOT VALVE L=500MM	

Pos	Part No	UN	Qty	Description	Page No

Machine Type	Group Description	Used-In	Group Number	Page No

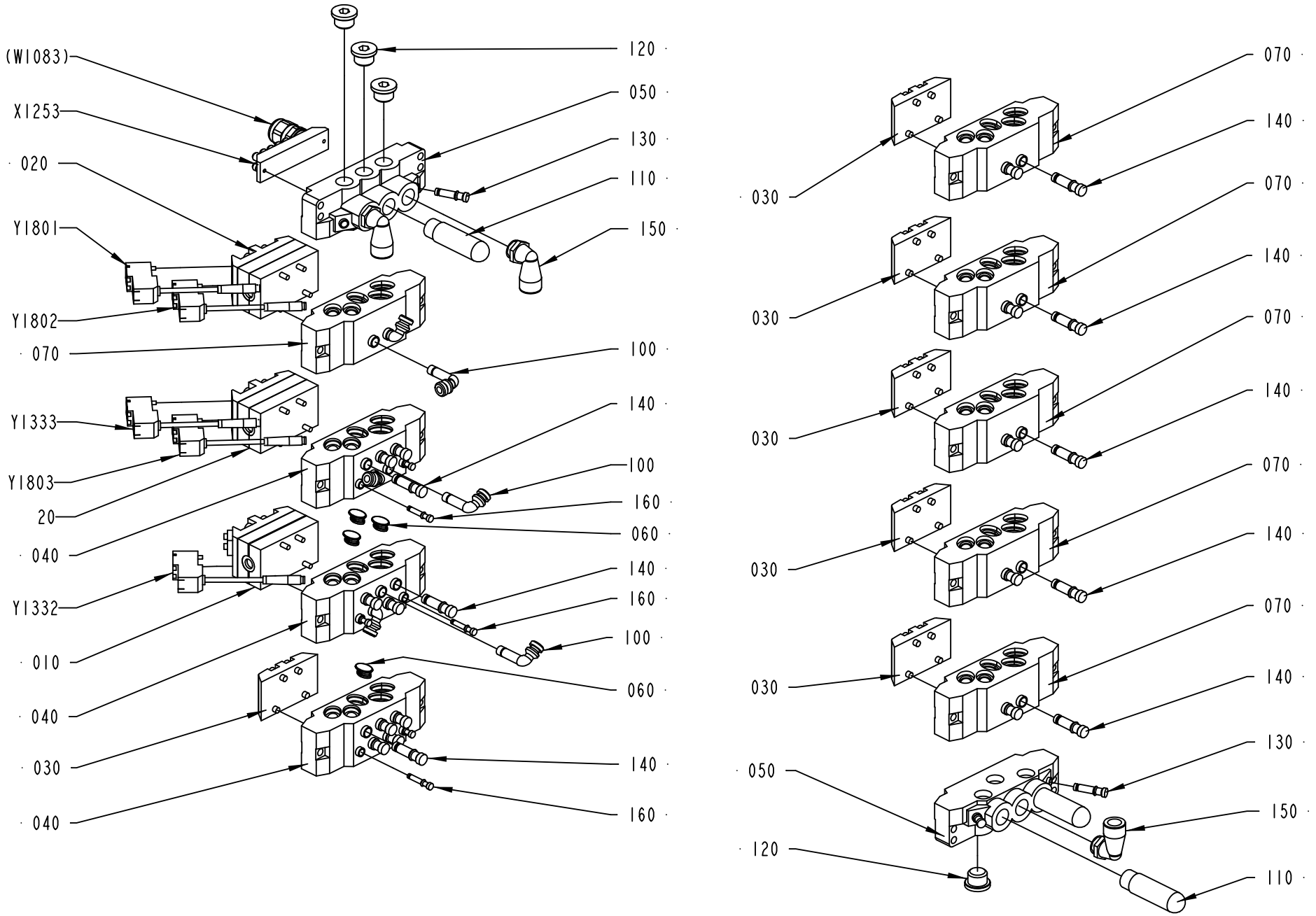
(W1083)
X1253
020
Y1801
Y1802
070
Y1333
Y1803
20
040
Y1332
010
040
030
040
120
050
130
110
150
100
140
100
160
060
140
160
100
060
140
160
070
030
070
140
030
070
140
030
070
140
030
070
140
050
120
130
150
110
2515323-2
319985

ECM: 344546 - 20080701
Group number: 2515323-0100
Assembly Drawing: 2515323-2_1_AD

This list covers pages from 1-376 to 1-379

Pos	Part No	UN	Qty	Description	Page No
A3/FLEX AUTOMCIP (See drawing on page: 1-376)					
010	90042-0215		6	VALVE BODY 5/2 UNISTABLE	
030	90042-0519		1	BLANK PLATE ISO SIZE 1	
100	90055-0143		11	HOSE,ELBOW 90 COUPLING,FPT,6X8MM	
140	342715-0103		16	BLIND PLUG 8 MM	
Y1311	90042-0538		1	PILOT VALVE L=500MM	
Y1320	90042-0538		1	PILOT VALVE L=500MM	
Y1324	90042-0538		1	PILOT VALVE L=500MM	
Y1325	90042-0538		1	PILOT VALVE L=500MM	
Y1326	90042-0538		1	PILOT VALVE L=500MM	
Y1801	90042-0538		1	PILOT VALVE L=500MM	
Y1802	90042-0538		1	PILOT VALVE L=500MM	
Y1803	90042-0538		1	PILOT VALVE L=500MM	
A3/FLEX MANUALCIP (See drawing on page: 1-378)					
010	90042-0215		1	VALVE BODY 5/2 UNISTABLE	
030	90042-0519		6	BLANK PLATE ISO SIZE 1	
100	90055-0143		6	HOSE,ELBOW 90 COUPLING,FPT,6X8MM	
140	342715-0103		21	BLIND PLUG 8 MM	
Y1801	90042-0538		1	PILOT VALVE L=500MM	
Y1802	90042-0538		1	PILOT VALVE L=500MM	
Y1803	90042-0538		1	PILOT VALVE L=500MM	
Common Parts					
020	90042-0271		2	VALVE BODY 2X3/2	
040	90042-0520		3	BASE PLATE ISO SIZE 1	
050	90042-0522		2	PORTED END PIECE ISO SIZE 1	
060	90042-0528		4	BLANKING KIT SEALS ISO SIZE 1	
070	90042-0532		6	BASE PLATE ISO SIZE 1	
110	90328-0024		3	SILENCER G3/8"	
120	342713-0211		6	PLUG, EXT THREAD HEX SOCKET 8638-00-380	
130	342715-0102		3	BLIND PLUG 6 MM	
150	90458-2960		3	ELBOW PIPE JOINT, EXT.THREAD,D=12MM-G3/8	
160	342715-0100		6	BLIND PLUG 4 MM	
X1253	90042-0535		1	TERMINAL BOARD 19 CORDS	
Y1332	90042-0538		1	PILOT VALVE L=500MM	
Y1333	90042-0538		1	PILOT VALVE L=500MM	

Pos	Part No	UN	Qty	Description	Page No

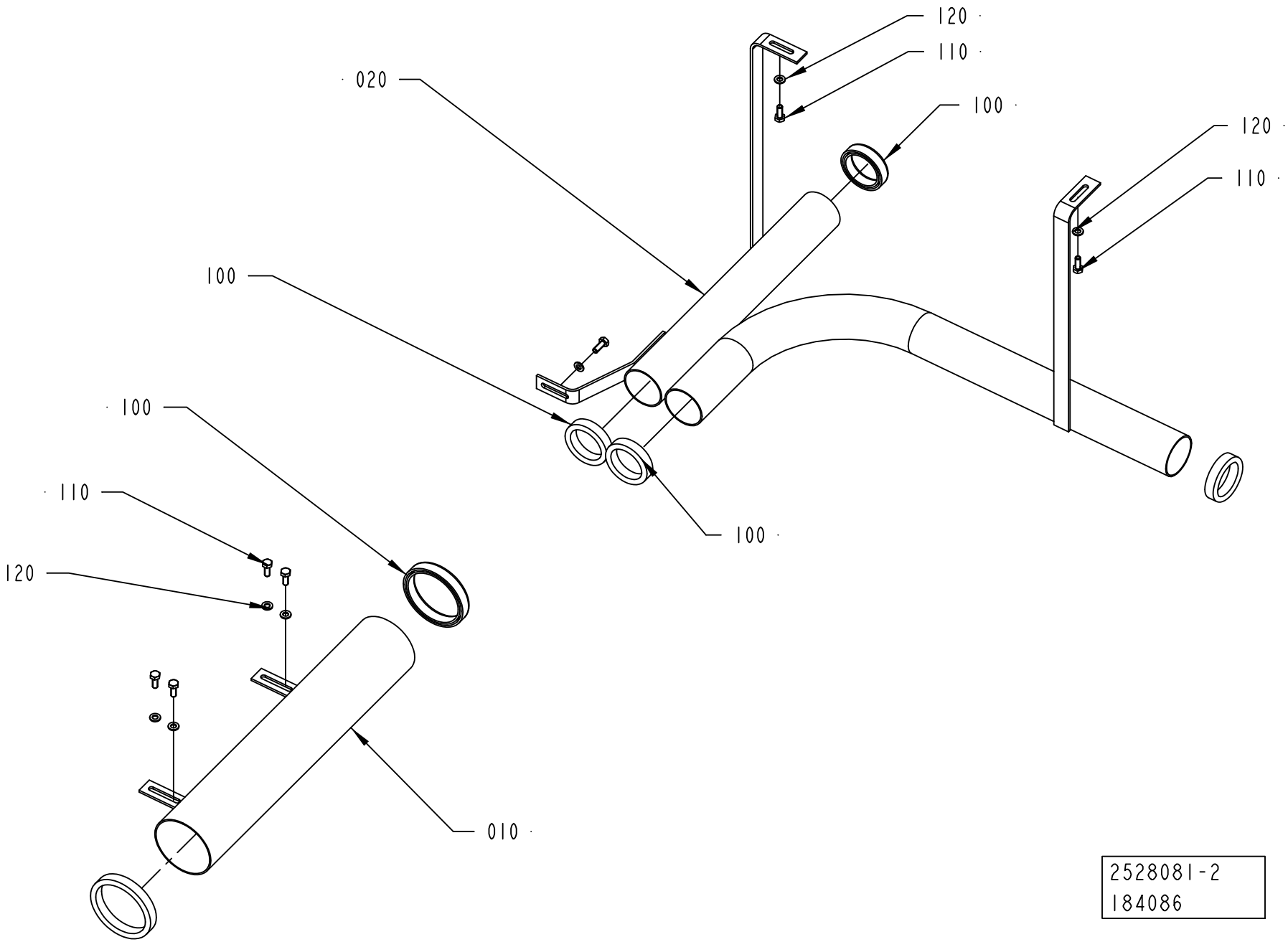
120
110
020
100
120
110
100
100
100
110
120
010
2528081-2
184086

ECM: 202216 - 20050224
Group number: 2528081-0200
Assembly Drawing: 2528081-2_1_AA

Pos	Part No	UN	Qty	Description	Page No
-					
010	2528082-0000		1	PIPE	
020	2528083-0000		1	TUBE	
100	90143-0059	MM	1600	SELF GRIPPING GASKET, 4610069	
110	312105-0368		7	SCREW M6S ISO 4017 M6X16 A480	
120	315105-0153		7	WASHER BRB 6,4X12 RFR	

Pos	Part No	UN	Qty	Description	Page No

CONNECTION BOX

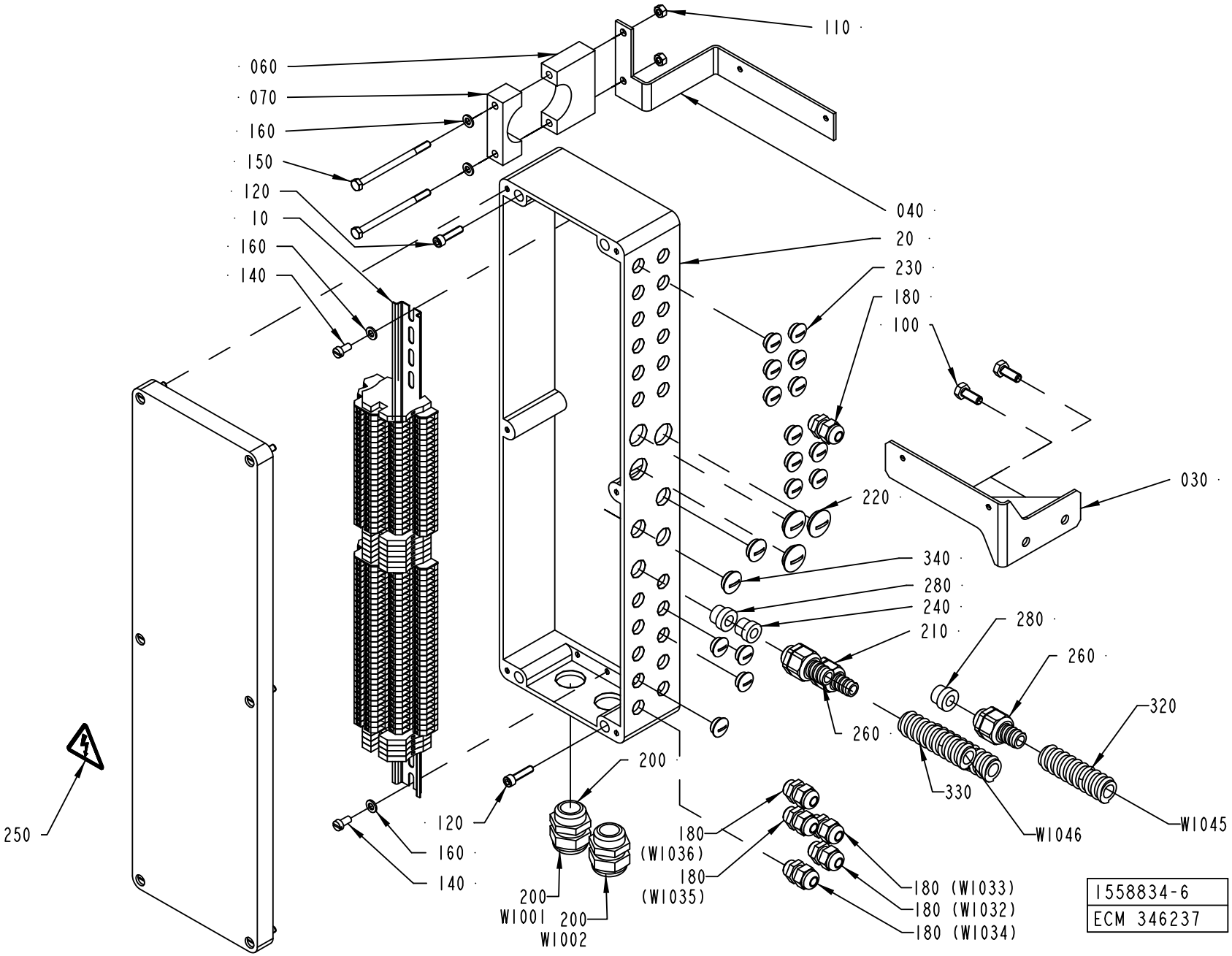

ECM: 349312 - 20080702
Group number: 1558834-0200
Assembly Drawing: 1558834-6_1_AE

Pos	Part No	UN	Qty	Description	Page No
A3/FLEX					
180	352103-0101		6	CABLE GLAND, ST 9, PR15,2/PG9	
230	90002-0013		15	BLANK-OFF PLUG, PR 15,2 SKINDICHT-BLK9	
260	353243-0003		2	HOSE GLAND W/O INSERT PG11 EXTENDED	
280	353249-0011		2	INSERT, SINGLE HOLE, EK 153/11	
330	90152-0050	MM	900	SPIRAL CONDUIT, 20X13, UL 1313	
340	90002-0009		2	BLANK-OFF PLUG, PR 18.6 SKINDICHT-BLK11	
W1045	351150-0405	M	2.8	CABLE OLFLEX 5X0,75 MM2 LIGHT/GREY	
Common Parts					
010	1558519-0100		1	TERMINAL BLOCK	**1-385**
020	1558833-0000		1	CONNECTION BOX	
030	2696039-0000		1	BRACKET	
040	2696038-0000		1	BRACKET	
060	2529742-0000		1	CLAMP	
070	735041-0000		1	CONNECTION CLAMP	
100	312105-0451		2	SCREW M6S ISO 4017 M8X20 A480	
110	312605-0316		2	HEXAGON NUT, M6M M6 A280	
120	312115-0372		4	SCREW ISO4762 M6X25 A4 80	
140	312125-0366		2	SCREW ISO 1207 M6X12 A4	
150	312105-0388		2	SCREW M6S ISO 4014 M6X90 A480	
160	315105-0153		4	WASHER BRB 6,4X12 RFR	
200	352103-0116		2	CABLE GLAND, ST 21, PR28,3/PG21	
210	353243-0001		1	HOSE GLAND W/O INSERT PG9 EXTENDED	
220	90002-0004		3	BLANK-OFF PLUG, PR 22,5 SKINDICHT-BLK16	
240	353249-0009		1	INSERT, SINGLE HOLE, EK 152/9	
250	359705-0015		1	WARNING SIGN ISO, RISK OF ELECTRIC SHOCK	
320	90152-0050	MM	1200	SPIRAL CONDUIT, 20X13, UL 1313	
380	90152-0050	MM	2200	SPIRAL CONDUIT, 20X13, UL 1313	
W1001	351150-0425	M	5.4	CABLE OLFLEX 25X0,75 MM2 LIGHT/GREY	
W1002	351150-0425	M	5.4	CABLE OLFLEX 25X0,75 MM2 LIGHT/GREY	
W1046	351150-0405	M	2.9	CABLE OLFLEX 5X0,75 MM2 LIGHT/GREY	
W1801	351150-0404	M	3	CABLE OLFLEX 4X0,75 MM2 LIGHT/GREY	
W1823	351150-0405	MM	1800	CABLE OLFLEX 5X0,75 MM2 LIGHT/GREY	

Pos	Part No	UN	Qty	Description	Page No

TERMINAL BLOCK

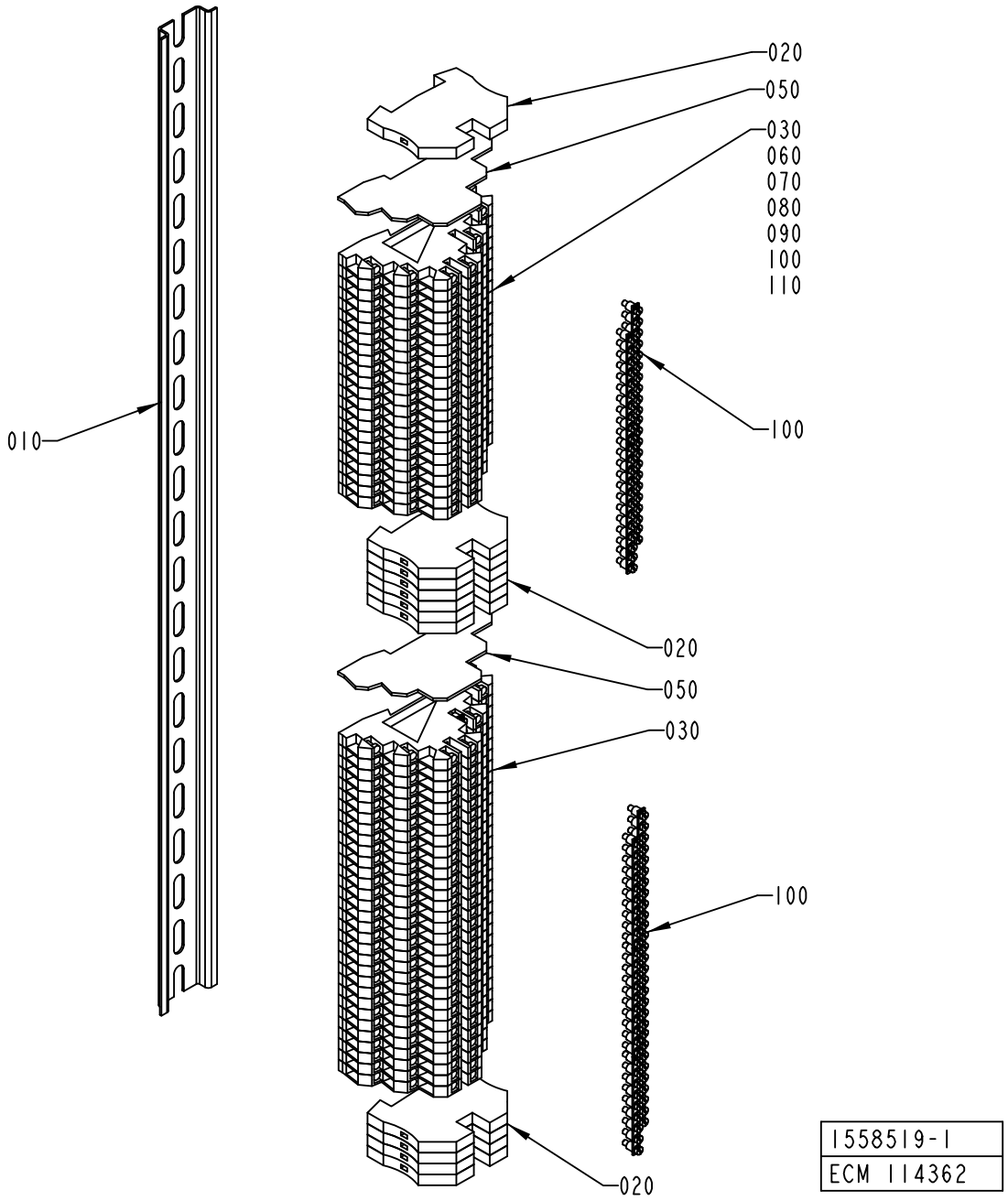

ECM: 189211 - 20041104
Group number: 1558519-0100
Assembly Drawing: 1558519-1_1_AA

Pos	Part No	UN	Qty	Description	Page No
-					
010	1558832-0000		1	RAIL	
020	353024-0205		11	EARTH TERMINAL, 1010.1	
030	353021-0302		53	TERMINALS,TRIPLE-LEVEL, DLD 2,5/35 PA	
050	353032-0302		2	END PLATE, AP DLD2,5 DB	
060	359011-0834		2	SET OF SIGNS 6-GW(EARTH)	
070	359011-0833		5	SET OF SIGNS 6-GW (-)	
080	359011-0832		5	SET OF SIGNS 6-GW (+)	
090	359011-0823		2	SET OF SIGNS 6-FW 101-150	
100	353034-0404		11	BRIDGE CONNECTOR Q10, 13131.0	
110	359011-0824		2	SET OF SIGNS 6-FW 151-200	

Pos	Part No	UN	Qty	Description	Page No

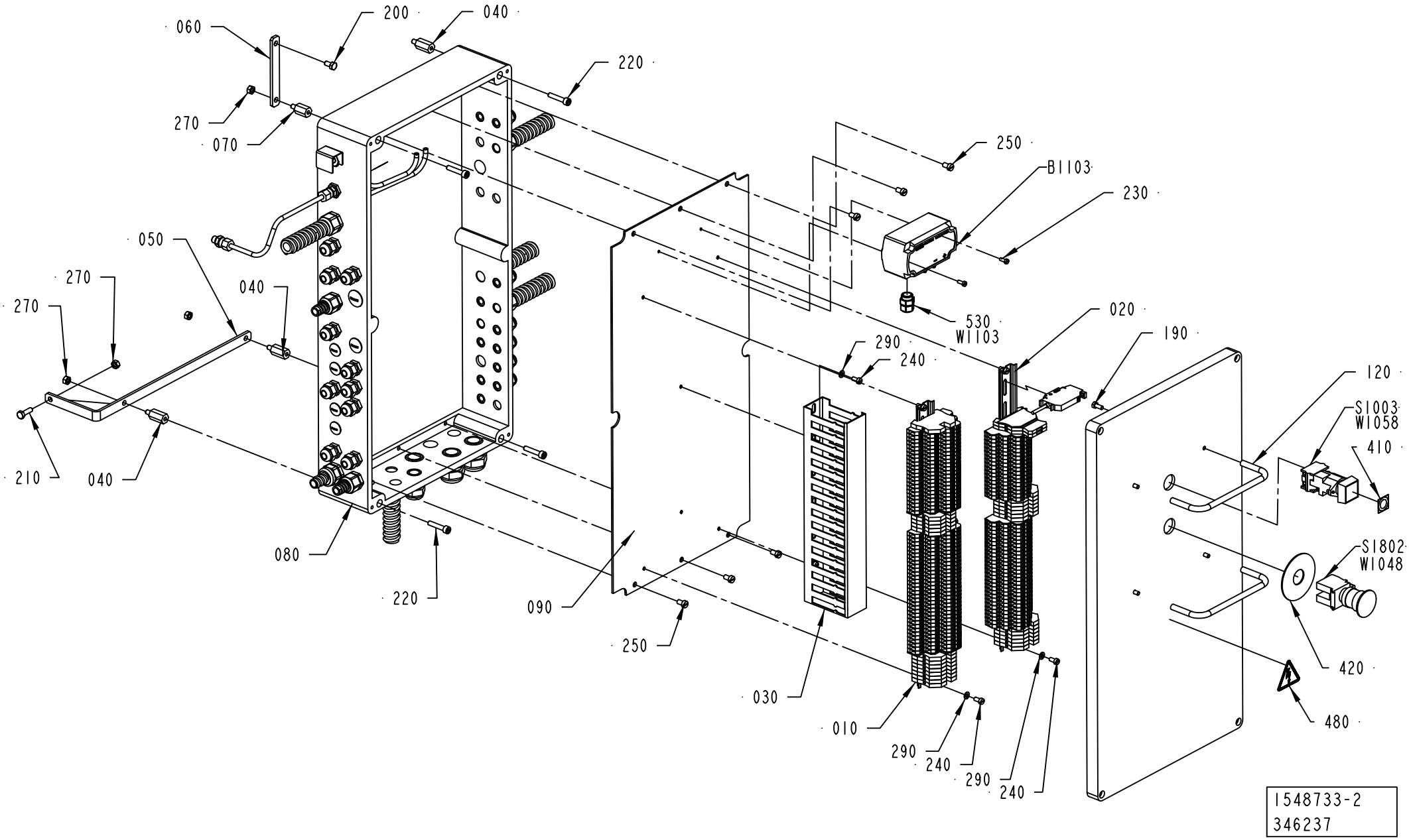
060
200
040
220
270
070
250
B1103
230
050
270
270
040
530
W1103
020
290
240
190
120
S1003
W1058
410
210
040
080
220
090
250
030
010
290
240
290
240
S1802
W1048
420
480
1548733-2
346237

ECM: 392892 - 20090701
Group number: 1548733-0100
Assembly Drawing: 1548733-2_1_AG

This list covers pages from 1-386 to 1-393

Pos	Part No	UN	Qty	Description	Page No
A3/FLEX DIMC/FLEX (See drawing on pages: 1-390, 1-392)					
040	1548869-0000		3	SPACER	
060	1519790-0000		1	PLATE	
070	1548870-0000		1	SPACER	
080	2797186-0000		1	CONNECTION BOX	
090	2796492-0000		1	MOUNTING PLATE	
110	1548749-0000		1	PIPE	
150	2877756-0000		1	PROTECTION	
200	312105-0366		1	SCREW M6S ISO 4017 M6X12 A480	
210	312105-0370		1	SCREW M6S ISO 4017 M6X20 A480	
230	312125-0289		2	SCREW ISO 1207 M4X10 A4	
270	312605-0316		4	HEXAGON NUT, M6M M6 A280	
300	342767-0100		2	CONN. BULKHEAD G1/8	
310	342921-0113		2	STRAIGHT COUPLING,EXT.THREADED 6/4-G1/8"	
320	352103-0101		21	CABLE GLAND, ST 9, PR15,2/PG9	
370	353243-0001		5	HOSE GLAND W/O INSERT PG9 EXTENDED	
380	353243-0003		4	HOSE GLAND W/O INSERT PG11 EXTENDED	
390	353249-0009		1	INSERT, SINGLE HOLE, EK 152/9	
400	353249-0011		6	INSERT, SINGLE HOLE, EK 153/11	
440	90002-0009		2	BLANK-OFF PLUG, PR 18.6 SKINDICHT-BLK11	
450	90002-0013		8	BLANK-OFF PLUG, PR 15,2 SKINDICHT-BLK9	
460	90002-0016		2	BLANK-OFF PLUG PR 20.4 SKINDICHT-BLK13,5	
470	90030-0184		2	CONN. STR. GE06LRED71	
490	90166-0176	MM	210	RUBBER HOSE	
500	90166-0176	MM	200	RUBBER HOSE	
510	90152-0050	M	13.6	SPIRAL CONDUIT, 20X13, UL 1313	
530	90459-7081		1	GLAND, EXTENDED, M16X1,5	
550	351160-0102	M	4.5	WIRE AWM 1X0,75 MM2 DARKBLUE	
580	353243-0009		1	HOSE GLAND W/O INSERT PG13,5 EXTENDED	
590	353249-0008		2	INSERT, SINGLE HOLE, EK 152/7	
600	353249-0036		2	INSERT, MULTI HOLE, EK152 M 2X4	
610	351160-0102	M	8.1	WIRE AWM 1X0,75 MM2 DARKBLUE	
B1103	90459-4810		1	PRESS TRANSD (DIFF) 0 - 2000PA, 2681-20C	
W1012	351150-0403	M	5	CABLE OLFLEX 3X0,75 MM2 LIGHT/GREY	
W1013	351150-0403	M	4.8	CABLE OLFLEX 3X0,75 MM2 LIGHT/GREY	
W1015	351150-0403	M	4.5	CABLE OLFLEX 3X0,75 MM2 LIGHT/GREY	
W1018	351150-0403	M	4.6	CABLE OLFLEX 3X0,75 MM2 LIGHT/GREY	
W1041	351150-0405	M	1.4	CABLE OLFLEX 5X0,75 MM2 LIGHT/GREY	
W1066	351150-0403	M	2	CABLE OLFLEX 3X0,75 MM2 LIGHT/GREY	
W1103	90459-4274	M	6.1	SCR. CABLE 2X0,5MM2	
W1232	351150-0403	M	3.2	CABLE OLFLEX 3X0,75 MM2 LIGHT/GREY	
W1233	351150-0403	M	3.2	CABLE OLFLEX 3X0,75 MM2 LIGHT/GREY	
W1235	351150-0403	M	2.5	CABLE OLFLEX 3X0,75 MM2 LIGHT/GREY	
W1810	90459-4274	M	3.5	SCR. CABLE 2X0,5MM2	
A3/FLEX NODIMC (See drawing on pages: 1-386, 1-388)					
040	1548869-0000		3	SPACER	
060	1519790-0000		1	PLATE	
070	1548870-0000		1	SPACER	
080	2797186-0000		1	CONNECTION BOX	
090	2796492-0000		1	MOUNTING PLATE	
110	1548749-0000		1	PIPE	
150	2877756-0000		1	PROTECTION	
200	312105-0366		1	SCREW M6S ISO 4017 M6X12 A480	
210	312105-0370		1	SCREW M6S ISO 4017 M6X20 A480	
230	312125-0289		2	SCREW ISO 1207 M4X10 A4	
270	312605-0316		4	HEXAGON NUT, M6M M6 A280	
300	342767-0100		2	CONN. BULKHEAD G1/8	
310	342921-0113		2	STRAIGHT COUPLING,EXT.THREADED 6/4-G1/8"	
320	352103-0101		21	CABLE GLAND, ST 9, PR15,2/PG9	
370	353243-0001		5	HOSE GLAND W/O INSERT PG9 EXTENDED	
380	353243-0003		3	HOSE GLAND W/O INSERT PG11 EXTENDED	
390	353249-0009		1	INSERT, SINGLE HOLE, EK 152/9	
400	353249-0011		4	INSERT, SINGLE HOLE, EK 153/11	
440	90002-0009		3	BLANK-OFF PLUG, PR 18.6 SKINDICHT-BLK11	
450	90002-0013		8	BLANK-OFF PLUG, PR 15,2 SKINDICHT-BLK9	
460	90002-0016		2	BLANK-OFF PLUG PR 20.4 SKINDICHT-BLK13,5	
470	90030-0184		2	CONN. STR. GE06LRED71	
490	90166-0176	MM	210	RUBBER HOSE	
500	90166-0176	MM	200	RUBBER HOSE	
510	90152-0050	M	13.4	SPIRAL CONDUIT, 20X13, UL 1313	
530	90459-7081		1	GLAND, EXTENDED, M16X1,5	
550	351160-0102	M	4.5	WIRE AWM 1X0,75 MM2 DARKBLUE	
580	353243-0009		1	HOSE GLAND W/O INSERT PG13,5 EXTENDED	
590	353249-0008		2	INSERT, SINGLE HOLE, EK 152/7	
600	353249-0036		2	INSERT, MULTI HOLE, EK152 M 2X4	
610	351160-0102	M	8.1	WIRE AWM 1X0,75 MM2 DARKBLUE	
B1103	90459-4810		1	PRESS TRANSD (DIFF) 0 - 2000PA, 2681-20C	
W1012	351150-0403	M	5	CABLE OLFLEX 3X0,75 MM2 LIGHT/GREY	
W1013	351150-0403	M	4.8	CABLE OLFLEX 3X0,75 MM2 LIGHT/GREY	
W1015	351150-0403	M	4.5	CABLE OLFLEX 3X0,75 MM2 LIGHT/GREY	
W1018	351150-0403	M	4.6	CABLE OLFLEX 3X0,75 MM2 LIGHT/GREY	
W1041	351150-0405	M	1.4	CABLE OLFLEX 5X0,75 MM2 LIGHT/GREY	
W1066	351150-0403	M	2	CABLE OLFLEX 3X0,75 MM2 LIGHT/GREY	
W1103	90459-4274	M	6.1	SCR. CABLE 2X0,5MM2	

Machine Type | Group Description | Used-In | Group Number | Page No

CONNECTION BOX

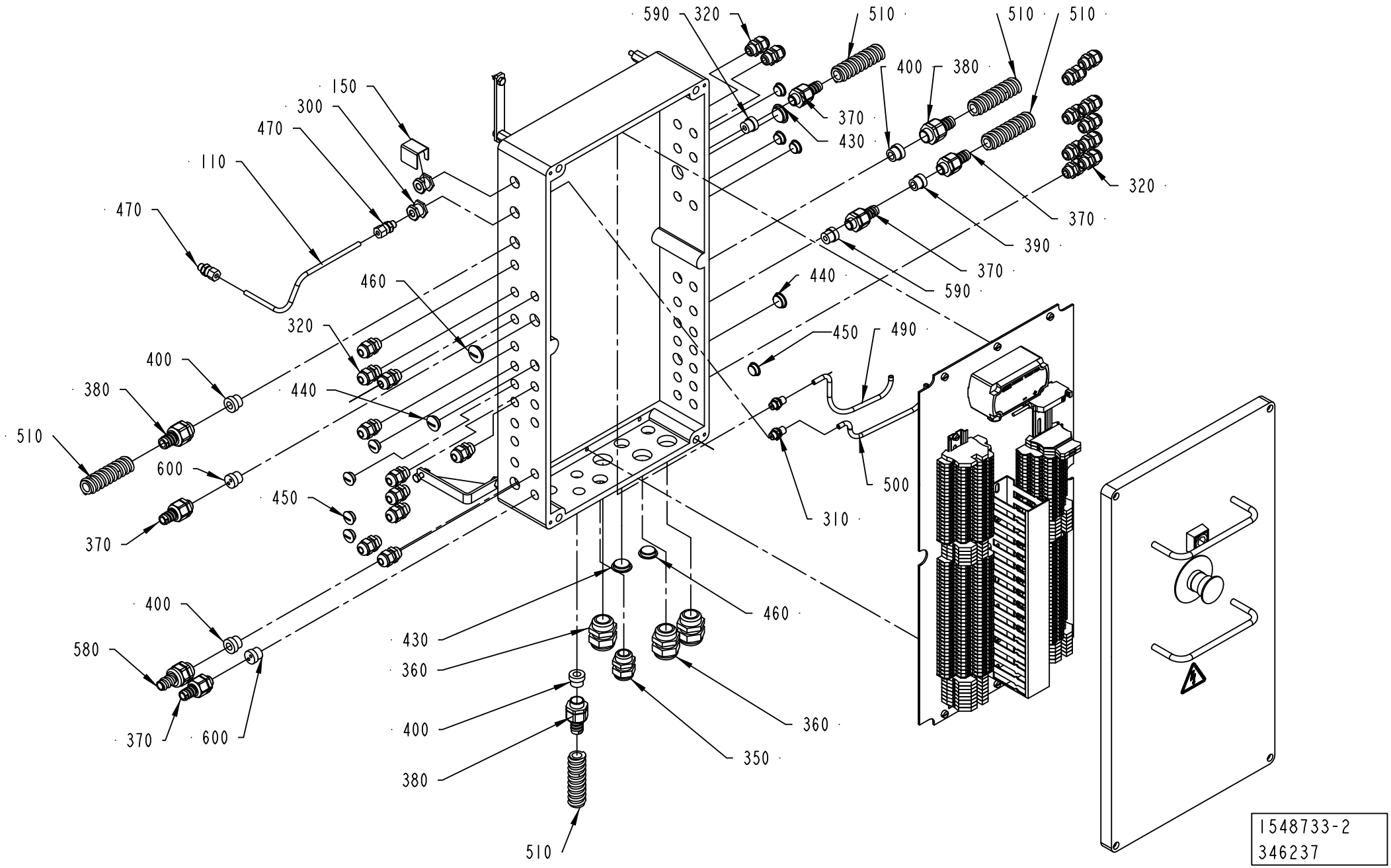

Pos	Part No	UN	Qty	Description	Page No
A3/FLEX NODIMC (Cont'd) (See drawing on pages: 1-386, 1-388)					
W1232	351150-0403	M	3.2	CABLE OLFLEX 3X0,75 MM2 LIGHT/GREY	
W1233	351150-0403	M	3.2	CABLE OLFLEX 3X0,75 MM2 LIGHT/GREY	
W1810	90459-4274	M	3.5	SCR. CABLE 2X0,5MM2	
Common Parts					
010	1549542-0100		1	TERMINAL BLOCK	**1-395**
020	1548728-0100		1	TERMINAL BLOCK	**1-397**
030	1129480-0000		1	CABLE DUCT	
050	1519789-0000		1	BRACKET	
120	2570678-0000		2	HANDLE	
190	312105-0327		4	SCREW M6S ISO 4017 M5X12 A480	
220	312115-0374		4	SCREW ISO4762 M6X30 A4 80	
240	312125-0325		6	SCREW ISO 1207 M5X10 A4	
250	312125-0364		6	SCREW ISO 1207 M6X10 A4	
290	315105-0146		6	WASHER BRB 5,3X10 RFR	
350	352103-0111		1	CABLE GLAND, ST 16, PR22,5/PG16	
360	352103-0116		3	CABLE GLAND, ST 21, PR28,3/PG21	
410	359301-0110		1	BUTTON SIGN, SHORT STOP	
420	486826-0001		1	SIGN "EMERGENCY STOP"	
430	90002-0004		3	BLANK-OFF PLUG, PR 22,5 SKINDICHT-BLK16	
480	359705-0015		1	WARNING SIGN ISO, RISK OF ELECTRIC SHOCK	
S1003	90064-0084		1	PUSH BUTTON, YELLOW	
S1802	90458-1651		1	EMERGENCY STOP, ZB4-BS-844 ZB4-BZ-104	
W1003	351150-0425	M	6	CABLE OLFLEX 25X0,75 MM2 LIGHT/GREY	
W1004	351150-0425	M	6	CABLE OLFLEX 25X0,75 MM2 LIGHT/GREY	
W1005	351150-0425	M	6	CABLE OLFLEX 25X0,75 MM2 LIGHT/GREY	
W1006	351150-0407	M	6	CABLE OLFLEX 12X0,75 MM2 LIGHT/GREY	
W1011	351150-0405	M	3.2	CABLE OLFLEX 5X0,75 MM2 LIGHT/GREY	
W1029	351150-0404	M	1.65	CABLE OLFLEX 4X0,75 MM2 LIGHT/GREY	
W1030	351150-0403	M	1.5	CABLE OLFLEX 3X0,75 MM2 LIGHT/GREY	
W1031	351150-0403	M	1.5	CABLE OLFLEX 3X0,75 MM2 LIGHT/GREY	
W1044	351150-0405	M	2.1	CABLE OLFLEX 5X0,75 MM2 LIGHT/GREY	
W1048	351150-0405	M	1	CABLE OLFLEX 5X0,75 MM2 LIGHT/GREY	
W1058	351150-0403	M	1.1	CABLE OLFLEX 3X0,75 MM2 LIGHT/GREY	
W1065	351150-0403	M	1.7	CABLE OLFLEX 3X0,75 MM2 LIGHT/GREY	
W1511	90220-0165	M	1.2	SCR. CABLE 5X0,34MM2	

Pos	Part No	UN	Qty	Description	Page No

CONNECTION BOX

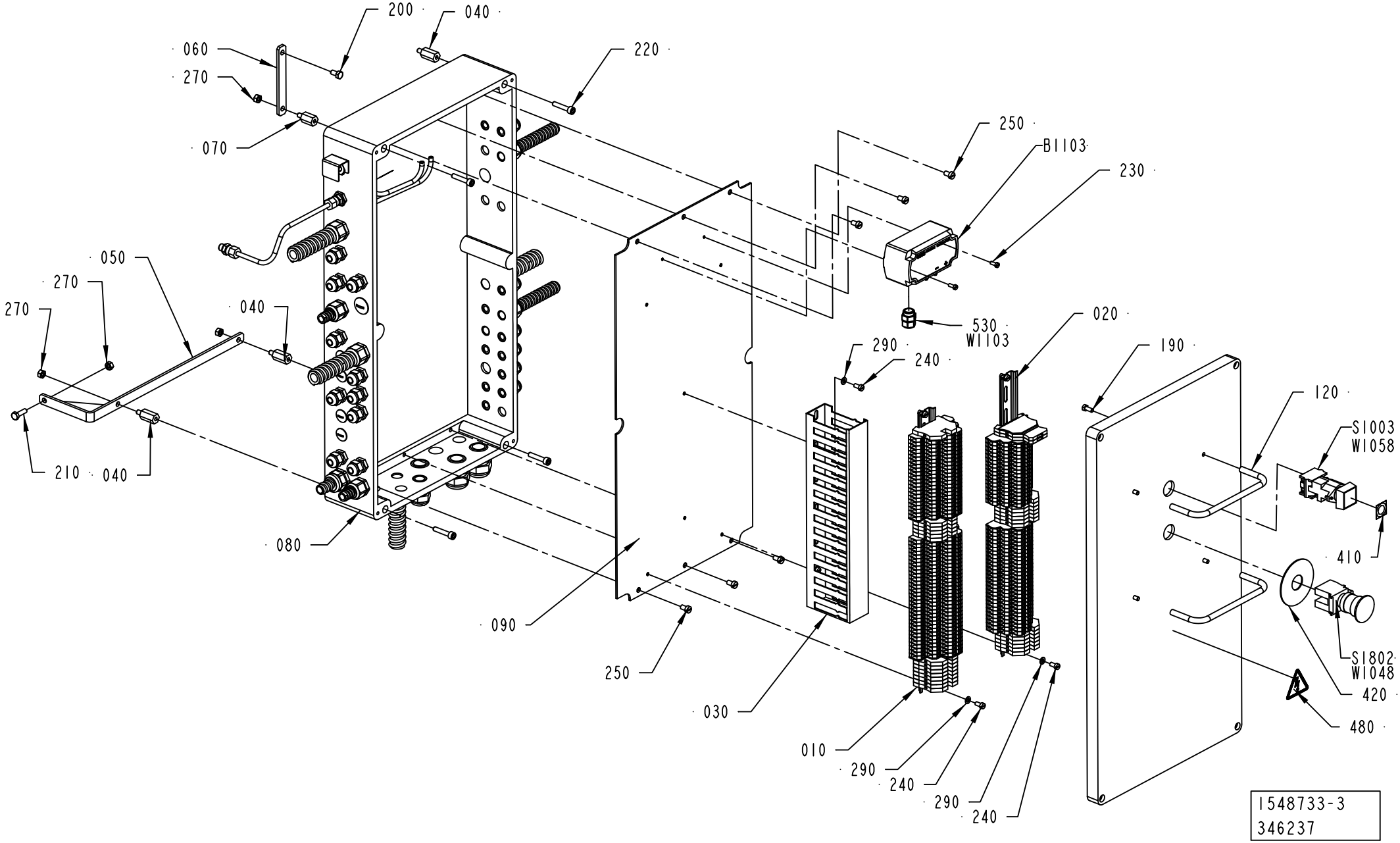

Pos	Part No	UN	Qty	Description	Page No

SEE PREVIOUS LISTS PAGES: 1-387, 1-389.

Pos	Part No	UN	Qty	Description	Page No

CONNECTION BOX

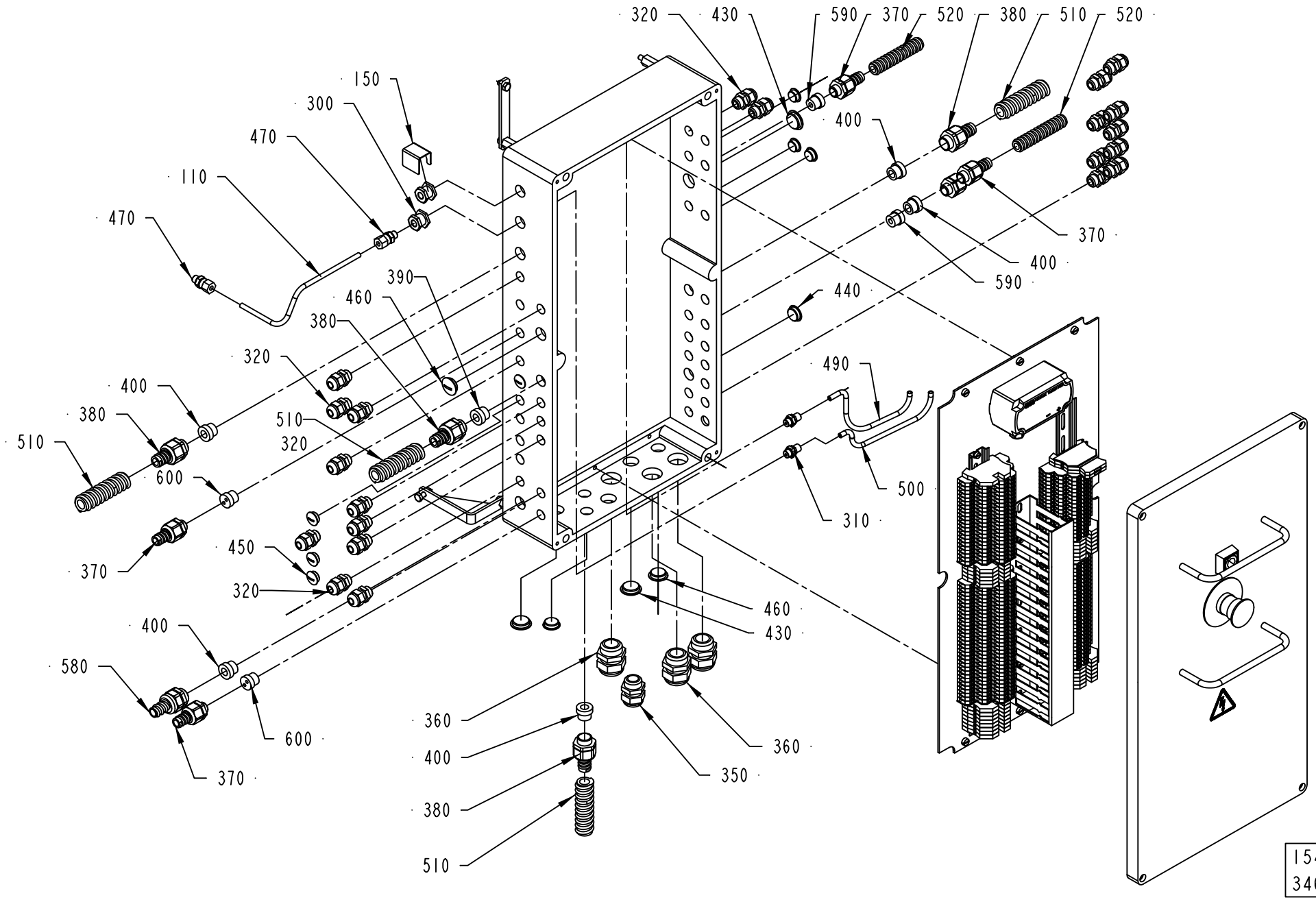

1548733-3
346237

ECM: 392892 - 20090701
Group number: 1548733-0100
Assembly Drawing: 1548733-3_2_AG

This list covers pages from 1-386 to 1-393

Pos	Part No	UN	Qty	Description	Page No

SEE PREVIOUS LISTS PAGES: 1-387, 1-389.

Pos	Part No	UN	Qty	Description	Page No

TERMINAL BLOCK

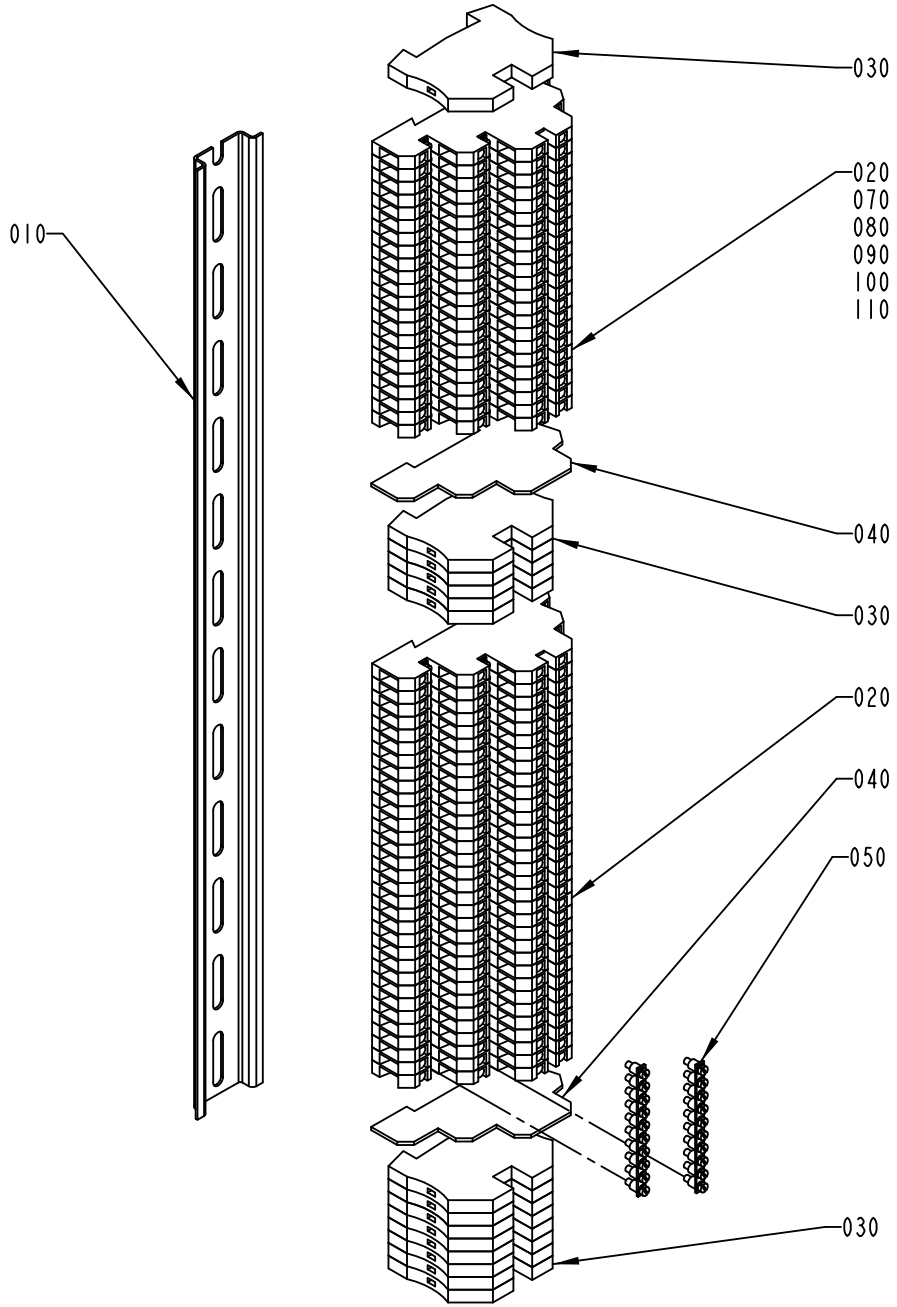

ECM: 342895 - 20080402
Group number: 1549542-0100
Assembly Drawing: 1549542-1_1_AB

Pos	Part No	UN	Qty	Description	Page No
-					
010	1548729-0000		1	RAIL	
020	353021-0302		54	TERMINALS,TRIPLE-LEVEL, DLD 2,5/35 PA	
030	353024-0205		14	EARTH TERMINAL, 1010.1	
040	353032-0302		2	END PLATE, AP DLD2,5 DB	
050	353034-0404		11	BRIDGE CONNECTOR Q10, 13131.0	
060	359011-0823		1	SET OF SIGNS 6-FW 101-150	
070	359011-0832		1	SET OF SIGNS 6-GW (+)	
080	359011-0833		1	SET OF SIGNS 6-GW (-)	
090	359011-0834		1	SET OF SIGNS 6-GW(EARTH)	
100	359011-0824		1	SET OF SIGNS 6-FW 151-200	
110	359011-0825		1	SET OF SIGNS 6-FW 201-250	

Pos	Part No	UN	Qty	Description	Page No

TERMINAL BLOCK

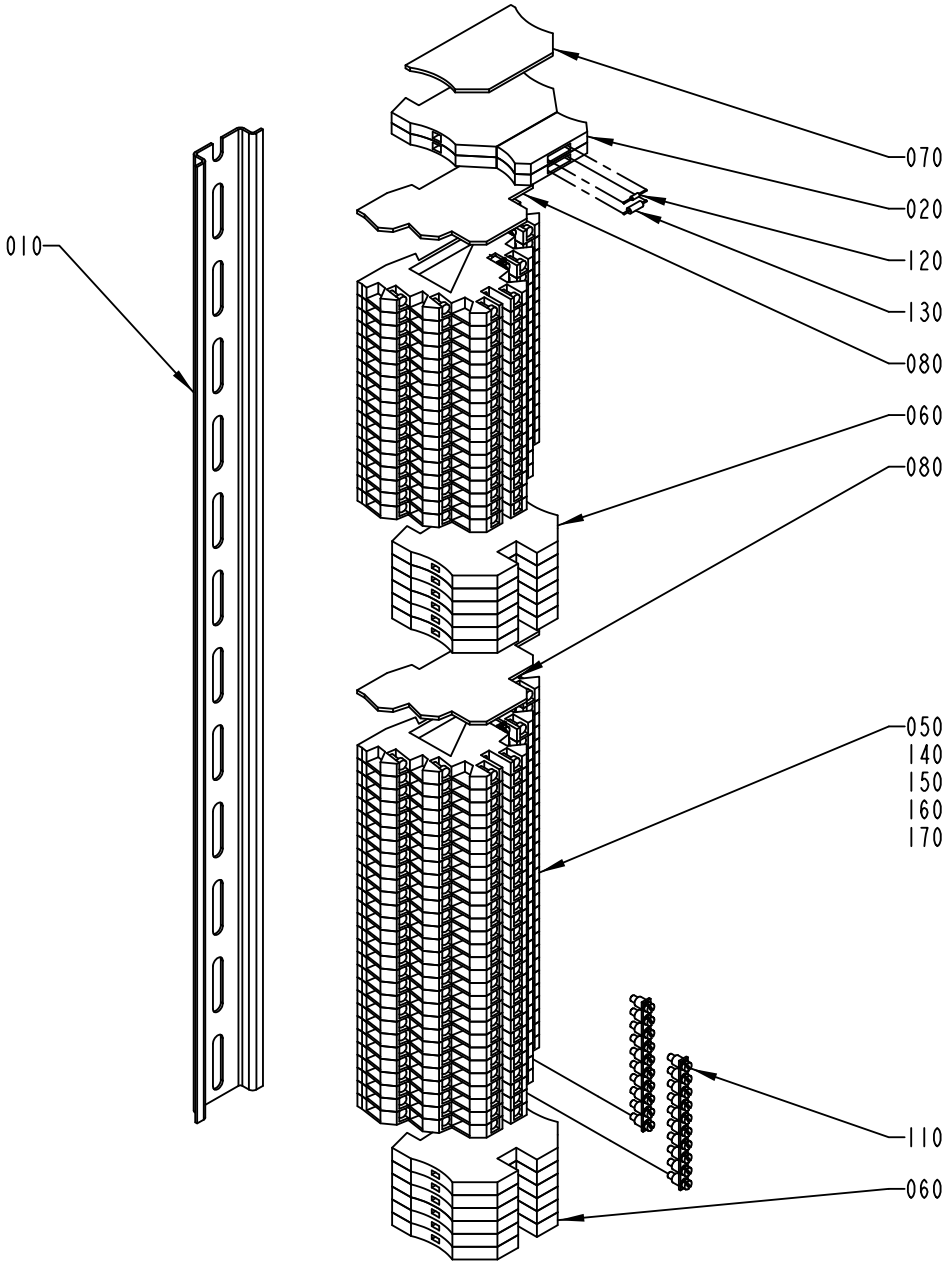

1548728-1
ECN 114362

ECM: 342890 - 20080402
Group number: 1548728-0100
Assembly Drawing: 1548728-1_1_AA

Pos	Part No	UN	Qty	Description	Page No
-					
010	1548729-0000		1	RAIL	
020	353021-0127		2	TERMINAL DISCONNECTABLE, WTR 2,5+WSD 2,5	
050	353021-0302		45	TERMINALS,TRIPLE-LEVEL, DLD 2,5/35 PA	
060	353024-0205		12	EARTH TERMINAL, 1010.1	
070	353032-0004		1	END PLATE WAP 2,5-10 BEIGE	
080	353032-0302		2	END PLATE, AP DLD2,5 DB	
110	353034-0404		10	BRIDGE CONNECTOR Q10, 13131.0	
120	90038-0049		1	DIODE	
130	90121-0127		1	RESISTANCE FIXED, 1,5 KOHM, 0,25 W	
140	359011-0823		1	SET OF SIGNS 6-FW 101-150	
150	359011-0832		1	SET OF SIGNS 6-GW (+)	
160	359011-0833		1	SET OF SIGNS 6-GW (-)	
170	359011-0834		1	SET OF SIGNS 6-GW(EARTH)	

Pos	Part No	UN	Qty	Description	Page No

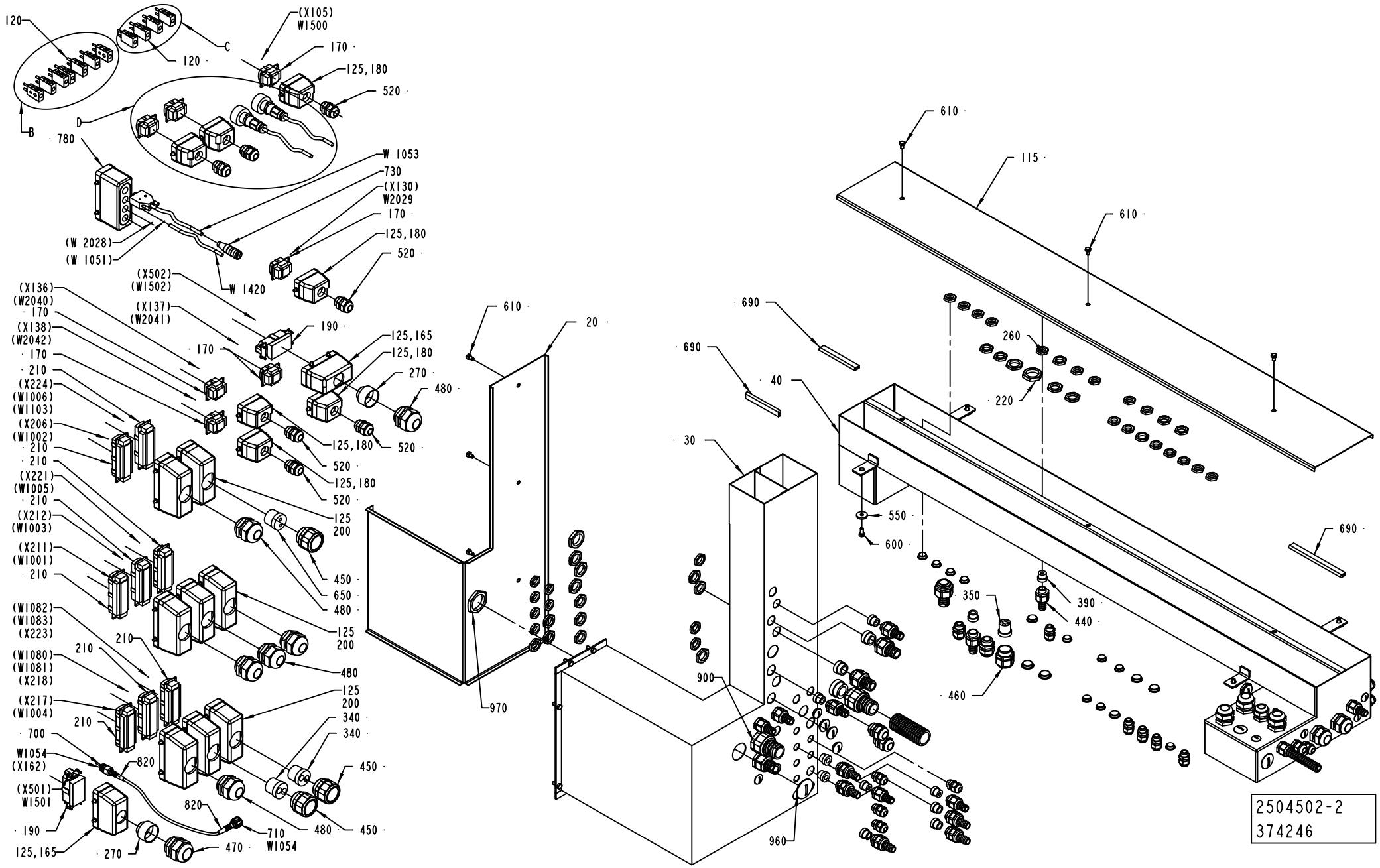
120
C
120
(X105)
W1500
170
125,180
520
D
B
780
W 1053
730
(X130)
W2029
170
125,180
520
(W 2028)
(W 1051)
W 1420
(X502)
(W1502)
(X136)
(W2040)
170
(X137)
(W2041)
(X138)
(W2042)
170
210
(X224)
(W1006)
(W1103)
(X206)
(W1002)
210
210
(X221)
(W1005)
210
(X212)
(W1003)
(X211)
(W1001)
210
(W1082)
(W1083)
(X223)
(W1080)
(W1081)
(X218)
(X217)
(W1004)
210
700
W1054
(X162)
(X501)
W1501
190
125,165
270
470
710
W1054
820
820
480
450
340
340
450
125
200
480
650
450
125
200
480
210
210
125
200
190
170
125,165
125,180
270
480
125,180
520
125,180
520
125,180
520
610
20
970
610
115
610
690
690
40
30
900
960
260
220
550
600
350
390
440
460
690
2504502-2
374246

ECM: 387769 - 20090701
Group number: 2504502-0100
Assembly Drawing: 2504502-2_1_AG

This list covers pages from 1-398 to 1-405

Pos	Part No	UN	Qty	Description	Page No
A3/FLEX DIMC/FLEX (See drawing on pages: 1-402, 1-404)					
050	2509652-0000		1	COVER	
060	2509650-0000		1	COVER	
070	2509651-0000		1	COVER	
080	2509649-0000		1	COVER	
090	2509648-0000		1	CABLE DUCT	
100	2509647-0000		1	CABLE DUCT	
110	2509646-0000		1	CABLE DUCT	
125	90110-0385		18	MARKING HOLDER, 4.242.3853.0	
150	90152-0050	M	2	SPIRAL CONDUIT, 20X13, UL 1313	
170	90110-0159		8	MALE INSERT 70.310.0640.0	
180	90110-0157		8	CABLE HOOD 6-POL 70.352.0628.1	
220	90099-0119		10	NUT, PR 28,3 (PG21)	
230	90099-0118		15	NUT, PR 20,4 (PG13,5)	
240	90099-0117		26	NUT, PR 18,6 (PG11)	
260	90099-0104		54	NUT, PR 15,2 (PG9)	
280	90002-0016		7	BLANK-OFF PLUG PR 20.4 SKINDICHT-BLK13,5	
290	90002-0013		27	BLANK-OFF PLUG, PR 15,2 SKINDICHT-BLK9	
300	90002-0012		2	BLANK-OFF PLUG, PR 28,3 SKINDICHT-BLK21	
320	90002-0004		3	BLANK-OFF PLUG, PR 22,5 SKINDICHT-BLK16	
370	353249-0011		17	INSERT, SINGLE HOLE, EK 153/11	
380	353249-0009		1	INSERT, SINGLE HOLE, EK 152/9	
390	353249-0008		5	INSERT, SINGLE HOLE, EK 152/7	
430	353243-0003		11	HOSE GLAND W/O INSERT PG11 EXTENDED	
440	353243-0001		10	HOSE GLAND W/O INSERT PG9 EXTENDED	
500	352103-0111		5	CABLE GLAND, ST 16, PR22,5/PG16	
520	352103-0108		8	CABLE GLAND, ST 13,5 , PR20,4/PG13,5	
530	352103-0101		15	CABLE GLAND, ST 9, PR15,2/PG9	
540	352103-0100		2	CABLE GLAND, STR 9, PR15,2/PG9	
640	353249-0036		4	INSERT, MULTI HOLE, EK152 M 2X4	
760	353243-0005		1	HOSE GLAND W/O INSERT PG16 EXTENDED	
870	90089-0029		1	ENLARGING SLEEVE	
W1240	90220-0105	M	6	SCR. CABLE 4X2,5MM2	
W1500	351150-0418	M	5	CABLE OLFLEX 4X2,5 MM2 LIGHT/GREY	
A3/FLEX NODIMC (See drawing on pages: 1-398, 1-400)					
050	2509652-0000		1	COVER	
060	2509650-0000		1	COVER	
070	2509651-0000		1	COVER	
080	2509649-0000		1	COVER	
090	2509648-0000		1	CABLE DUCT	
100	2509647-0000		1	CABLE DUCT	
110	2509646-0000		1	CABLE DUCT	
125	90110-0385		17	MARKING HOLDER, 4.242.3853.0	
150	90152-0050	M	2	SPIRAL CONDUIT, 20X13, UL 1313	
170	90110-0159		7	MALE INSERT 70.310.0640.0	
180	90110-0157		7	CABLE HOOD 6-POL 70.352.0628.1	
220	90099-0119		11	NUT, PR 28,3 (PG21)	
230	90099-0118		15	NUT, PR 20,4 (PG13,5)	
240	90099-0117		26	NUT, PR 18,6 (PG11)	
260	90099-0104		56	NUT, PR 15,2 (PG9)	
280	90002-0016		8	BLANK-OFF PLUG PR 20.4 SKINDICHT-BLK13,5	
290	90002-0013		27	BLANK-OFF PLUG, PR 15,2 SKINDICHT-BLK9	
300	90002-0012		3	BLANK-OFF PLUG, PR 28,3 SKINDICHT-BLK21	
320	90002-0004		5	BLANK-OFF PLUG, PR 22,5 SKINDICHT-BLK16	
370	353249-0011		16	INSERT, SINGLE HOLE, EK 153/11	
380	353249-0009		1	INSERT, SINGLE HOLE, EK 152/9	
390	353249-0008		5	INSERT, SINGLE HOLE, EK 152/7	
430	353243-0003		11	HOSE GLAND W/O INSERT PG11 EXTENDED	
440	353243-0001		10	HOSE GLAND W/O INSERT PG9 EXTENDED	
500	352103-0111		4	CABLE GLAND, ST 16, PR22,5/PG16	
520	352103-0108		8	CABLE GLAND, ST 13,5 , PR20,4/PG13,5	
530	352103-0101		15	CABLE GLAND, ST 9, PR15,2/PG9	
540	352103-0100		2	CABLE GLAND, STR 9, PR15,2/PG9	
640	353249-0036		4	INSERT, MULTI HOLE, EK152 M 2X4	
W1500	351150-0418	M	5	CABLE OLFLEX 4X2,5 MM2 LIGHT/GREY	
Common Parts					
010	2504503-0000		1	COVER	
020	2504499-0000		1	LID	
030	2504498-0000		1	CABLE DUCT	
040	2504497-0000		1	CABLE DUCT	
115	1129372-0000		1	LID	
130	90152-0050	M	1	SPIRAL CONDUIT, 20X13, UL 1313	
135	90152-0050	M	1	SPIRAL CONDUIT, 20X13, UL 1313	
140	90152-0050	M	1	SPIRAL CONDUIT, 20X13, UL 1313	
160	90152-0058	M	1	SPIRAL CONDUIT, 15X9, UL 0909	
165	90110-0160		2	CABLE HOOD 6-16-POL 70.352.1628.1	
190	90110-0156		2	MALE INSERT 70.210.0653.0	
200	90110-0152		8	CABLE HOOD 24-POL 70.352.2428.1	
210	90110-0150		8	MALE INSERT 121110 0000	
250	90099-0110		7	NUT, PR 22,5 (PG16)	
270	90089-0015		2	REDUCING SLEEVE, PR37M/PR28,3F	
310	90002-0009		12	BLANK-OFF PLUG, PR 18.6 SKINDICHT-BLK11	
330	353249-0061		1	INSERT, SINGLE HOLE, EK 155/20	
340	353249-0060		2	INSERT, MULTI HOLE, E155M2X13	

Machine Type | Group Description | Used-In | Group Number | Page No

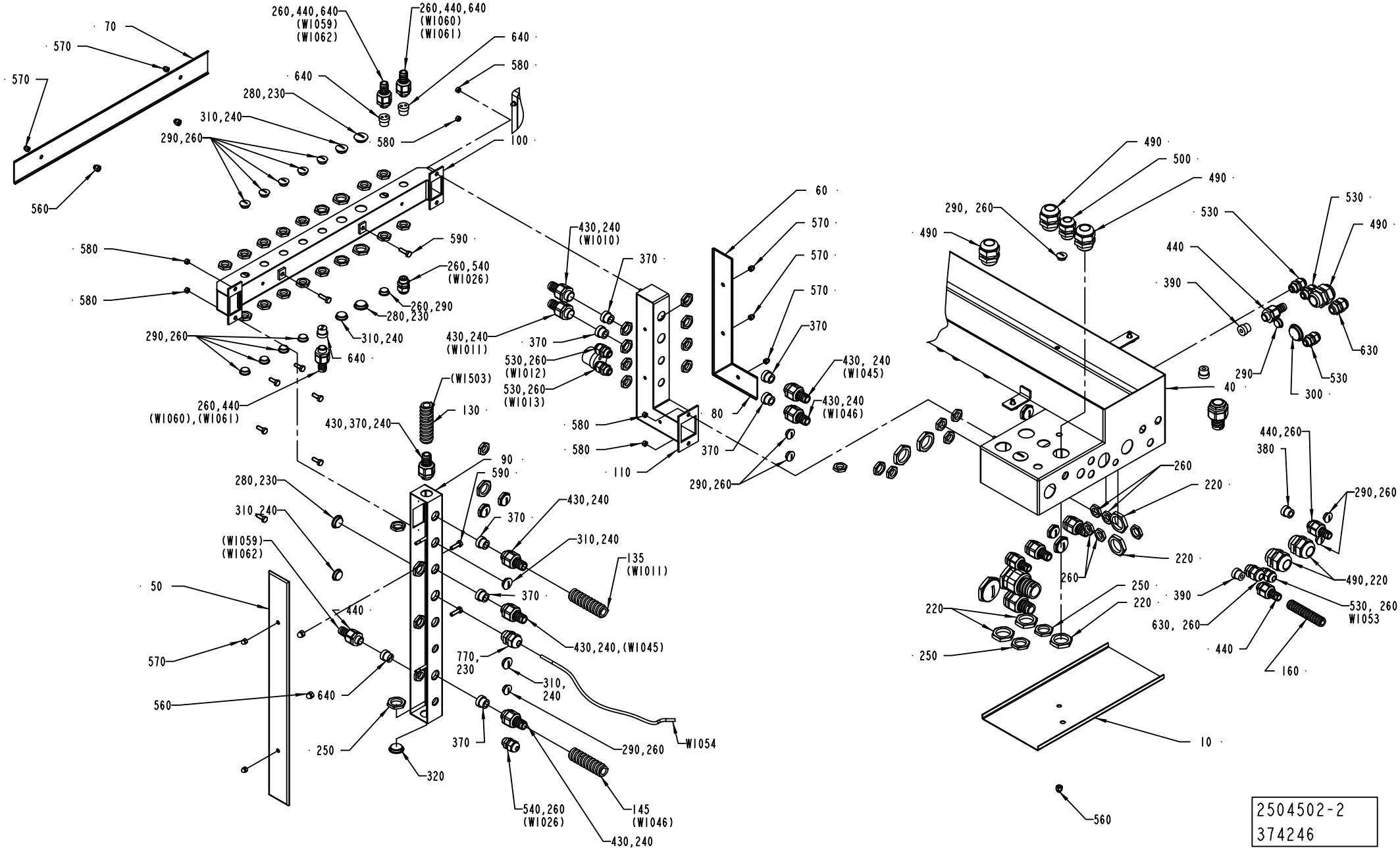
70
570
570
560
260,440,640
(W1059)
(W1062)
260,440,640
(W1060)
(W1061)
640
580
640
280,230
310,240
290,260
580
100
580
580
590
260,540
(W1026)
260,290
280,230
310,240
290,260
640
260,440
(W1060),(W1061)
(W1503)
130
430,370,240
90
590
280,230
310,240
(W1059)
(W1062)
50
570
560
640
440
250
320
370
770,
230
310,
240
290,260
W1054
540,260
(W1026)
145
(W1046)
430,240
430,240
(W1010)
370
430,240
(W1011)
370
530,260
(W1012)
530,260
(W1013)
580
580
110
60
570
570
570
370
80
370
290,260
430, 240
(W1045)
430,240
(W1046)
490
500
490
290, 260
490
530
530
490
440
390
630
290
530
40
300
440,260
380
290,260
260
220
220
260
250
220
220
250
490,220
390
530, 260
W1053
630, 260
440
160
10
560
2504502-2
374246

ECM: 387769 - 20090701
Group number: 2504502-0100
Assembly Drawing: 2504502-2_2_AG

This list covers pages from 1-398 to 1-405

Pos	Part No	UN	Qty	Description	Page No
Common Parts (Cont'd)					
350	353249-0051		1	INSERT, MULTI HOLE, E154M4X6	
360	353249-0014		2	INSERT, SINGLE HOLE, EK 154/16	
400	353243-0009		5	HOSE GLAND W/O INSERT PG13,5 EXTENDED	
410	353243-0007		1	HOSE GLAND W/O INSERT PG21 EXTENDED	
420	353243-0004		2	HOSE GLAND W/O INSERT PG13,5 EXTENDED	
450	353240-0006		3	GLAND W/O INSERT PG29 NORMAL	
460	353240-0005		1	GLAND W/O INSERT PG21 NORMAL	
470	352103-0121		1	CABLE GLAND, ST 29, PR37,0/PG29	
480	352103-0120		6	CABLE GLAND, STR 29, PR37,0/PG29	
490	352103-0116		6	CABLE GLAND, ST 21, PR28,3/PG21	
550	315125-0153		4	WASHER TBRSB 6,4X22X4 A4	
560	312705-0316		5	NUT HEX. DOMED CAP MHM-6 M6 A280	
570	312705-0314		7	NUT HEX. DOMED CAP MHM-6 M5 A280	
580	312605-0314		6	HEXAGON NUT, M6M M5 A280	
590	312105-0370		4	SCREW M6S ISO 4017 M6X20 A480	
600	312105-0367		4	SCREW M6S ISO 4017 M6X14 A480	
610	312105-0364		6	SCREW M6S ISO 4017 M6X10 A480	
630	352103-0106		3	CABLE GLAND, ST 11, PR18,6/PG11	
650	1347880-0000		1	INSERT	
690	90143-0097	M	1	SELF GRIPPING GASKET, 1011-24	
700	90458-2890		1	CONNECTOR, 21N-50N12N133NE	
710	90458-2892		1	CONNECTOR, 11 N-50-3-31/133 NE	
720	90110-0235		2	CABLE CONTACT, PX0739/P	
730	90459-2106		1	CABLE CONNECTOR, C091 31D004 100 2	
770	90012-0049		1	CABLE GLAND, STR13,5, PR20,4/PG13,5	
780	90110-0381		1	COVER, 310601-33 CYR24.4	
790	353300-0006	M	0.5	SHRINKABLE HOSE	
800	353300-0008	M	0.2	SHRINKABLE HOSE	
810	353300-0008	M	1.5	SHRINKABLE HOSE	
820	90458-2893		2	SLEEVE, 78 Z-0-3-4	
850	353001-0116		12	END SLEEVE H0.5/14 ORANGE	
860	90152-0070	M	2.3	METAL HOSE, 32,5X26, UL 2621	
880	353300-0010		1	SHRINKABLE HOSE	
890	353300-0001	M	0.05	SHRINKABLE HOSE	
900	2656905-0100		1	OPTIONAL PARTS	**1-407, 1-409, 1-411**
910	90143-0060	MM	140	EDGE STRIP 9,5X6,3MM BLACK PVC	
920	312105-0368		8	SCREW M6S ISO 4017 M6X16 A480	
930	90002-0018		1	BLANK-OFF PLUG, PR 12,5 SKINDICHT-BLK7	
940	90099-0116		1	NUT, PR 12,5 (PG7)	
950	353249-0066		1	INSERT, MULTI HOLE, E155M1X6/1X10	
960	90002-0010		1	BLANK-OFF PLUG, PR 37 SKINDICHT-BLK29	
970	90099-0120		1	NUT, PR 37 (PG29)	
W1052	90220-0165	M	5.5	SCR. CABLE 5X0,34MM2	
W1053	2833237-0000		1	CABLE	
W1054	90458-2895	M	7.5	COAXIAL CABLE RG 400/U BROWN	
W1300	90220-0034	M	5.5	THERMOCABLE TEX/SITW-20F-KX 2X0,5MM2	
W1302	90220-0034	M	7	THERMOCABLE TEX/SITW-20F-KX 2X0,5MM2	
W1305	90220-0034	M	5.2	THERMOCABLE TEX/SITW-20F-KX 2X0,5MM2	
W1306	90220-0034	M	7	THERMOCABLE TEX/SITW-20F-KX 2X0,5MM2	
W1307	90220-0034	M	8	THERMOCABLE TEX/SITW-20F-KX 2X0,5MM2	
W1315	90220-0165	M	5.5	SCR. CABLE 5X0,34MM2	
W1320	90220-0034	M	5.2	THERMOCABLE TEX/SITW-20F-KX 2X0,5MM2	
W1322	90220-0034	M	5.2	THERMOCABLE TEX/SITW-20F-KX 2X0,5MM2	
W1323	90220-0034	M	5.2	THERMOCABLE TEX/SITW-20F-KX 2X0,5MM2	
W1420	90220-0072	M	10	SCR. CABLE 4X0,34MM2	
W1501	351120-0268	M	5	CABLE SILFLEX SIHF 4X10 00460373	
W1830	90220-0104	M	5.8	SCR. CABLE 4X1,5MM2	
W2029	90220-0104	M	5.5	SCR. CABLE 4X1,5MM2	
X305	90326-0022		1	PLUG, MALE YELLOW CR-AL	
X306	90326-0022		1	PLUG, MALE YELLOW CR-AL	
X307	90326-0022		1	PLUG, MALE YELLOW CR-AL	
X308	90326-0022		1	PLUG, MALE YELLOW CR-AL	
X310	90326-0022		1	PLUG, MALE YELLOW CR-AL	
X311	90326-0022		1	PLUG, MALE YELLOW CR-AL	
X312	90326-0022		1	PLUG, MALE YELLOW CR-AL	
X313	90326-0022		1	PLUG, MALE YELLOW CR-AL	
X315	90326-0022		1	PLUG, MALE YELLOW CR-AL	
X317	90326-0022		1	PLUG, MALE YELLOW CR-AL	
X318	90326-0022		1	PLUG, MALE YELLOW CR-AL	

Machine Type	Group Description	Used-In	Group Number	Page No

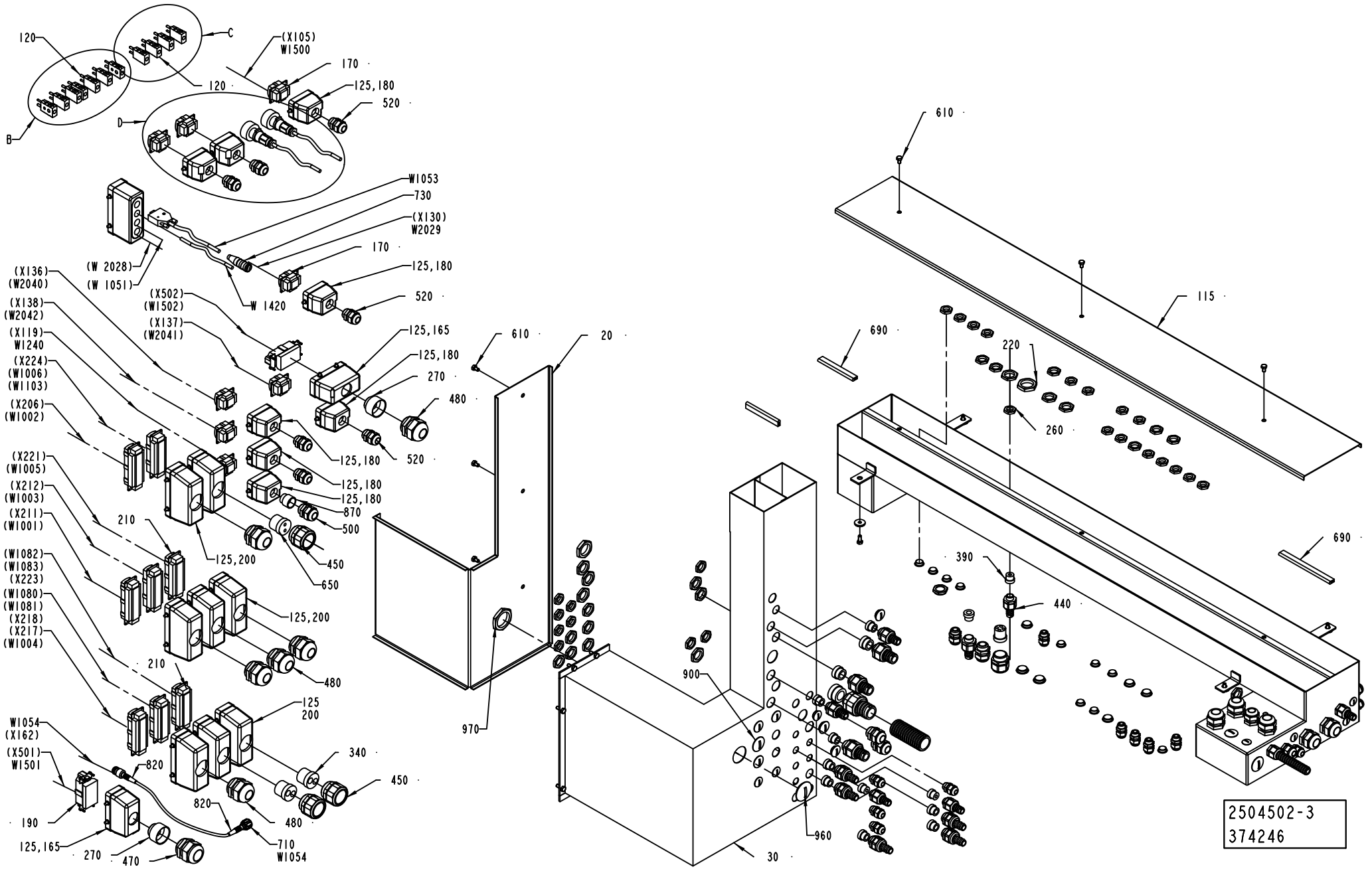
120
C
(X105)
W1500
170
120
125,180
520
D
B
W1053
730
(X130)
W2029
170
125,180
520
(W 2028)
(W 1051)
W 1420
(X136)
(W2040)
(X138)
(W2042)
(X119)
W1240
(X224)
(W1006)
(W1103)
(X206)
(W1002)
(X502)
(W1502)
(X137)
(W2041)
125,165
125,180
270
480
520
125,180
125,180
125,180
870
500
450
650
(X221)
(W1005)
(X212)
(W1003)
(X211)
(W1001)
210
125,200
(W1082)
(W1083)
(X223)
(W1080)
(W1081)
(X218)
(X217)
(W1004)
125,200
480
210
125
200
340
450
W1054
(X162)
(X501)
W1501
820
820
480
710
W1054
190
125,165
270
470
610
20
970
610
690
115
220
260
690
390
440
900
960
30
2504502-3
374246

ECM: 387769 - 20090701
Group number: 2504502-0100
Assembly Drawing: 2504502-3_1_AF

This list covers pages from 1-398 to 1-405

Pos	Part No	UN	Qty	Description	Page No
SEE PREVIOUS LISTS PAGES: 1-399, 1-401.					

Pos	Part No	UN	Qty	Description	Page No

CABLE TRENCH

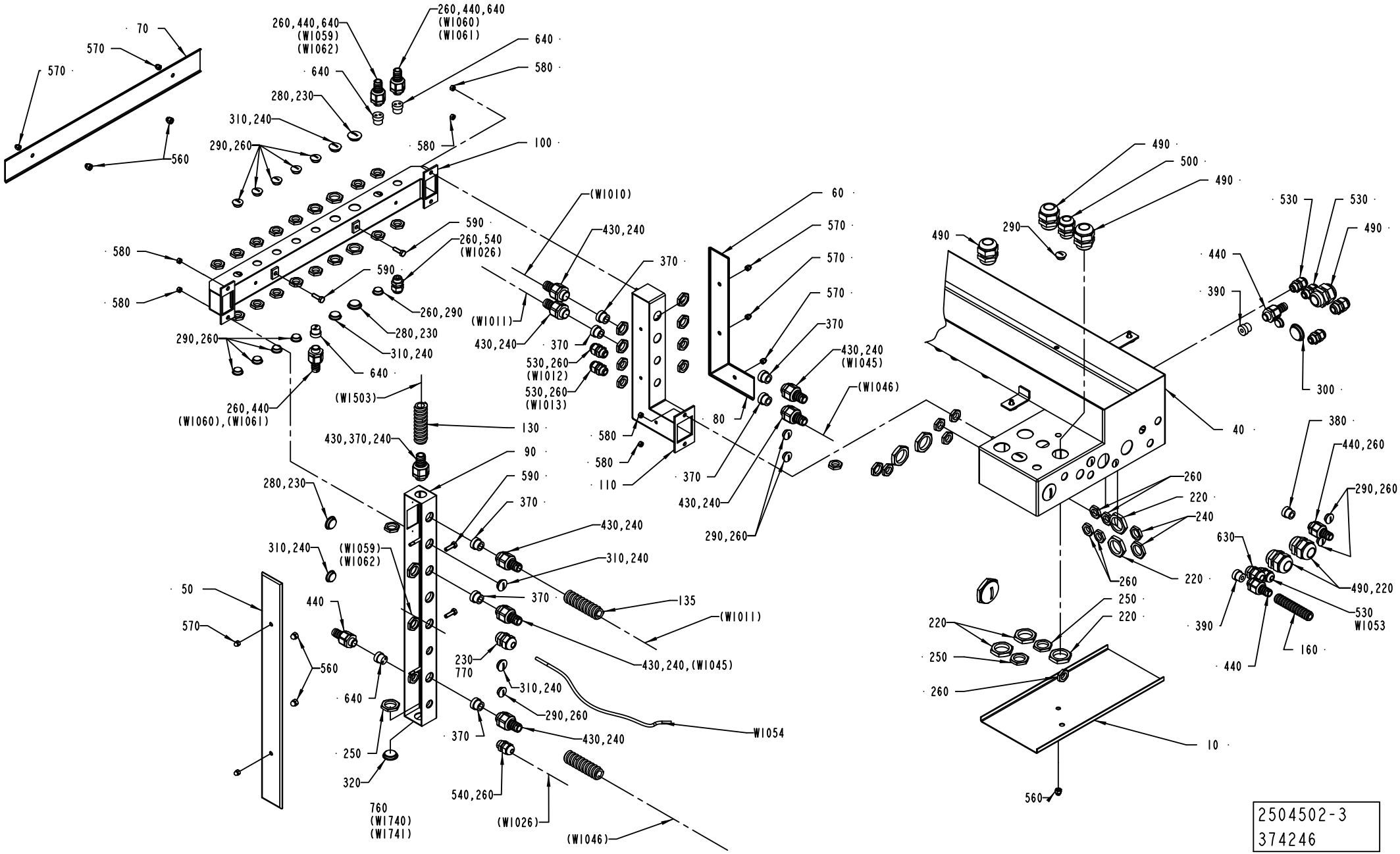

ECM: 387769 - 20090701
Group number: 2504502-0100
Assembly Drawing: 2504502-3_2_AF

This list covers pages from 1-398 to 1-405

Pos	Part No	UN	Qty	Description	Page No
SEE PREVIOUS LISTS PAGES: 1-399, 1-401.					

Pos	Part No	UN	Qty	Description	Page No

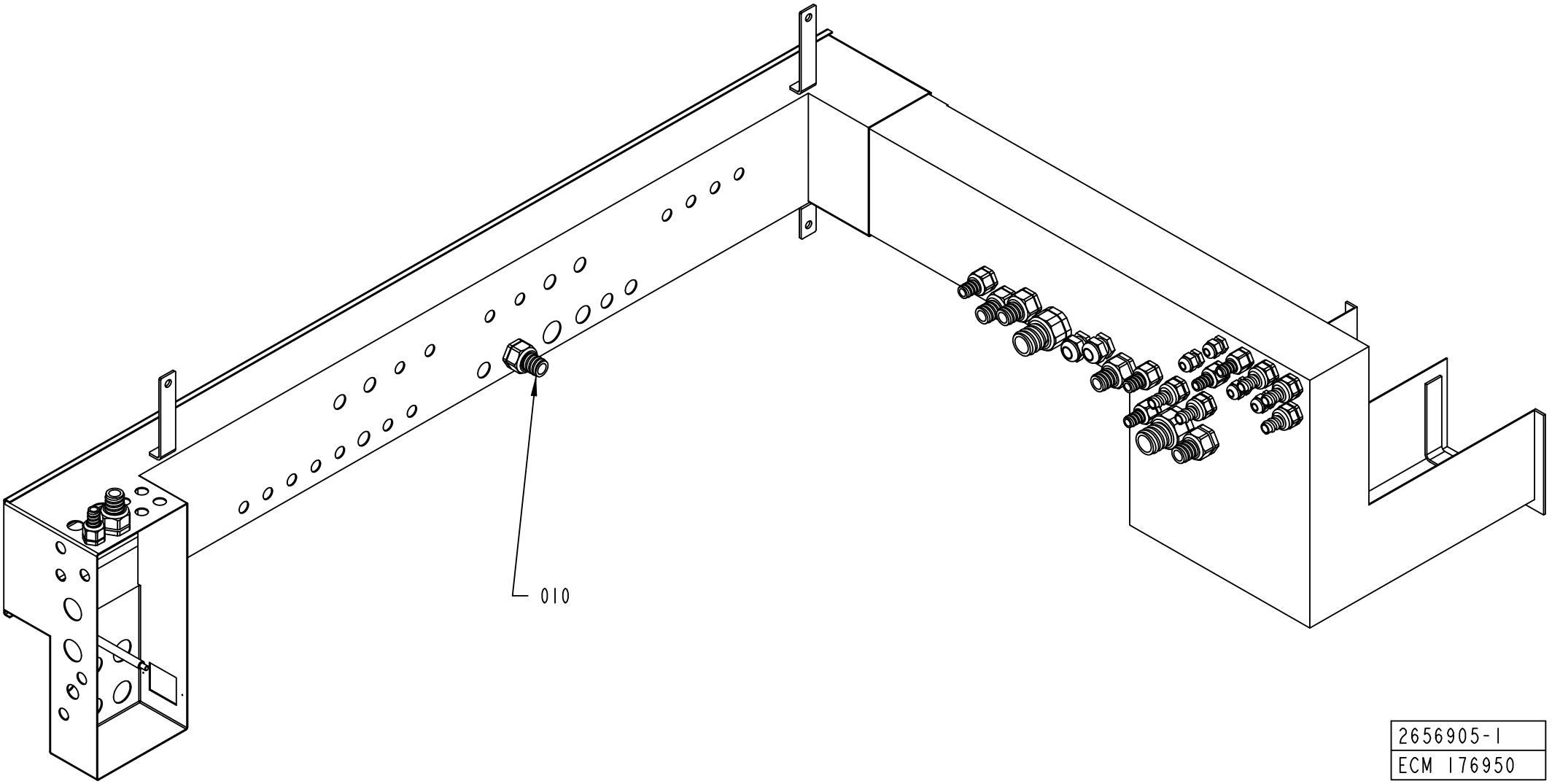

2656905-1
ECM 176950

ECM: 378422 - 20090401
Group number: 2656905-0100
Assembly Drawing: 2656905-1_1_AB

This list covers pages from 1-406 to 1-411

Pos	Part No	UN	Qty	Description	Page No
A3/FLEX NOHI (See drawing on pages: 1-408, 1-410)					
050	90099-0119		2	NUT, PR 28,3 (PG21)	
060	90099-0110		1	NUT, PR 22,5 (PG16)	
090	90099-0118		3	NUT, PR 20,4 (PG13,5)	
100	90002-0004		1	BLANK-OFF PLUG, PR 22,5 SKINDICHT-BLK16	
110	90002-0012		2	BLANK-OFF PLUG, PR 28,3 SKINDICHT-BLK21	
120	90002-0016		3	BLANK-OFF PLUG PR 20.4 SKINDICHT-BLK13,5	
130	90002-0013		1	BLANK-OFF PLUG, PR 15,2 SKINDICHT-BLK9	
140	90099-0104		1	NUT, PR 15,2 (PG9)	
HI (See drawing on page: 1-406)					
010	2649165-0100		1	CABLE DUCT	**1-413**

Pos	Part No	UN	Qty	Description	Page No

Machine Type | Group Description | Used-In | Group Number | Page No

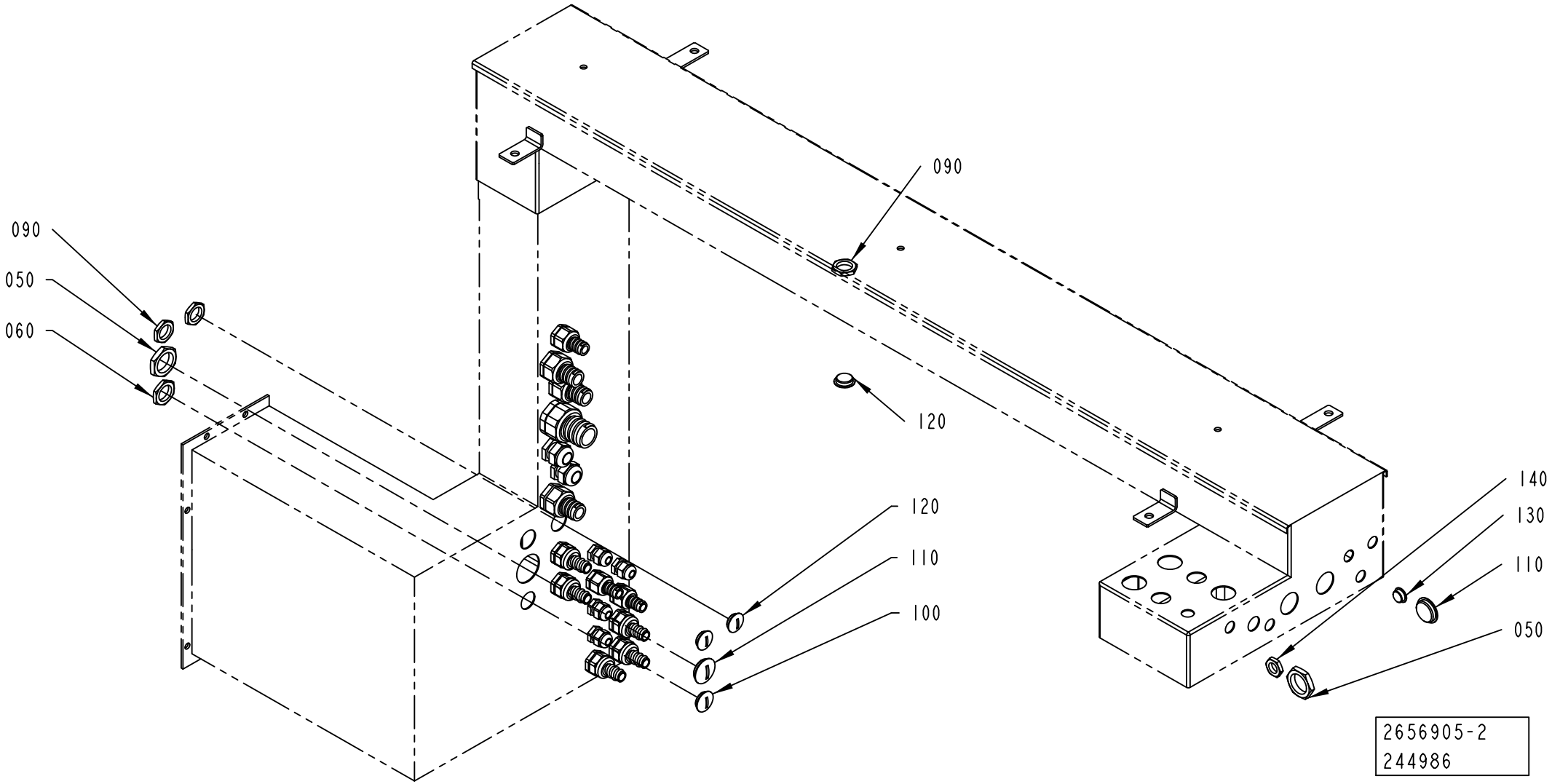
090
090
050
060
120
120
110
100
140
130
110
050
2656905-2
244986

ECM: 378422 - 20090401
Group number: 2656905-0100
Assembly Drawing: 2656905-2_1_AC

This list covers pages from 1-406 to 1-411

Pos	Part No	UN	Qty	Description	Page No
A3/FLEX NOHI (See drawing on pages: 1-408, 1-410)					
050	90099-0119		2	NUT, PR 28,3 (PG21)	
060	90099-0110		1	NUT, PR 22,5 (PG16)	
090	90099-0118		3	NUT, PR 20,4 (PG13,5)	
100	90002-0004		1	BLANK-OFF PLUG, PR 22,5 SKINDICHT-BLK16	
110	90002-0012		2	BLANK-OFF PLUG, PR 28,3 SKINDICHT-BLK21	
120	90002-0016		3	BLANK-OFF PLUG PR 20.4 SKINDICHT-BLK13,5	
130	90002-0013		1	BLANK-OFF PLUG, PR 15,2 SKINDICHT-BLK9	
140	90099-0104		1	NUT, PR 15,2 (PG9)	
HI (See drawing on page: 1-406)					
010	2649165-0100		1	CABLE DUCT	**1-413**

Pos	Part No	UN	Qty	Description	Page No

Machine Type | Group Description | Used-In | Group Number | Page No

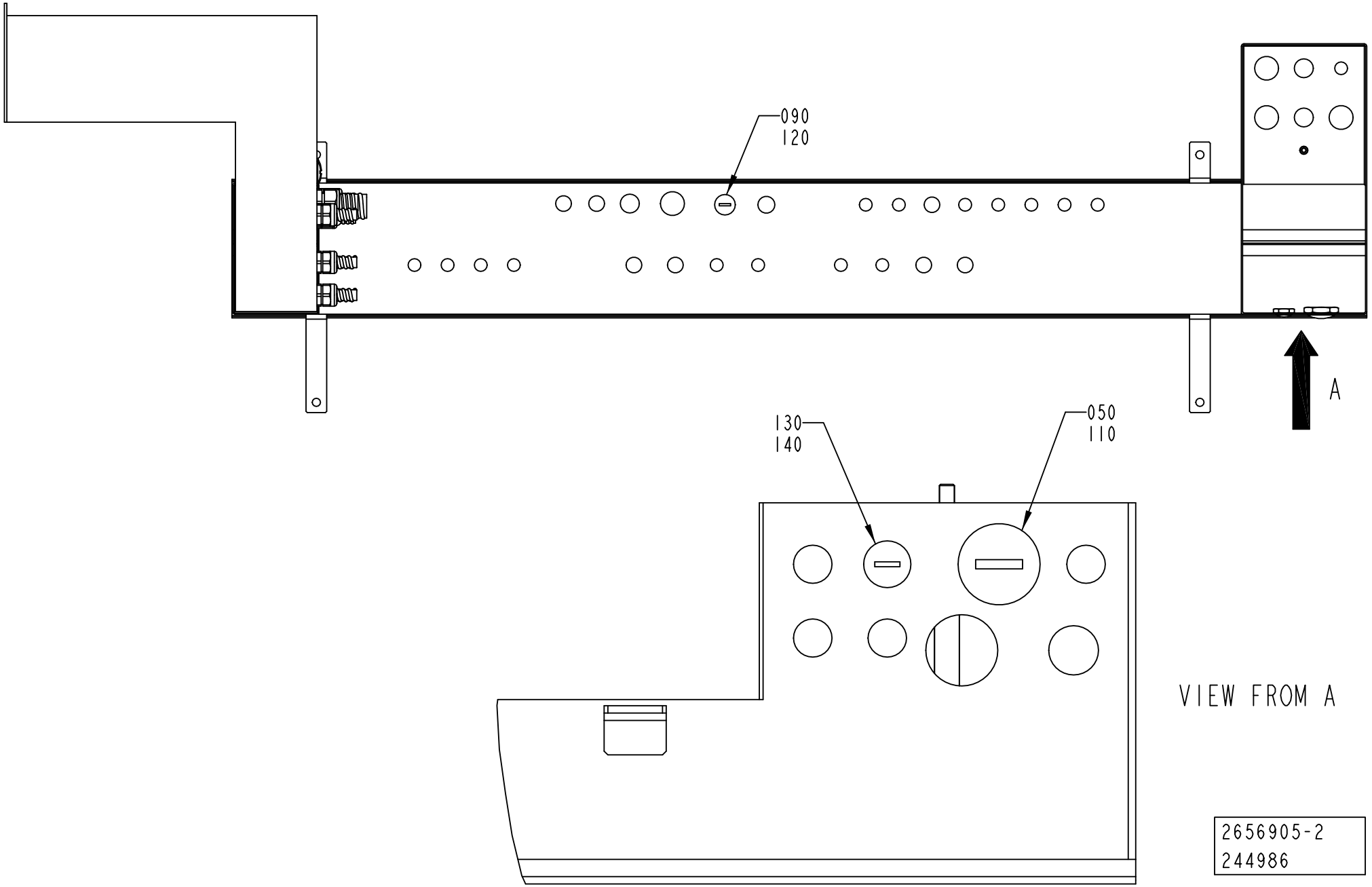
090
120
A
130
140
050
110
VIEW FROM A
2656905-2
244986

ECM: 378422 - 20090401
Group number: 2656905-0100
Assembly Drawing: 2656905-2_2_AC

This list covers pages from 1-406 to 1-411

Pos	Part No	UN	Qty	Description	Page No
A3/FLEX NOHI (See drawing on pages: 1-408, 1-410)					
050	90099-0119		2	NUT, PR 28,3 (PG21)	
060	90099-0110		1	NUT, PR 22,5 (PG16)	
090	90099-0118		3	NUT, PR 20,4 (PG13,5)	
100	90002-0004		1	BLANK-OFF PLUG, PR 22,5 SKINDICHT-BLK16	
110	90002-0012		2	BLANK-OFF PLUG, PR 28,3 SKINDICHT-BLK21	
120	90002-0016		3	BLANK-OFF PLUG PR 20.4 SKINDICHT-BLK13,5	
130	90002-0013		1	BLANK-OFF PLUG, PR 15,2 SKINDICHT-BLK9	
140	90099-0104		1	NUT, PR 15,2 (PG9)	
HI (See drawing on page: 1-406)					
010	2649165-0100		1	CABLE DUCT	**1-413**

Pos	Part No	UN	Qty	Description	Page No

Machine Type | Group Description | Used-In | Group Number | Page No

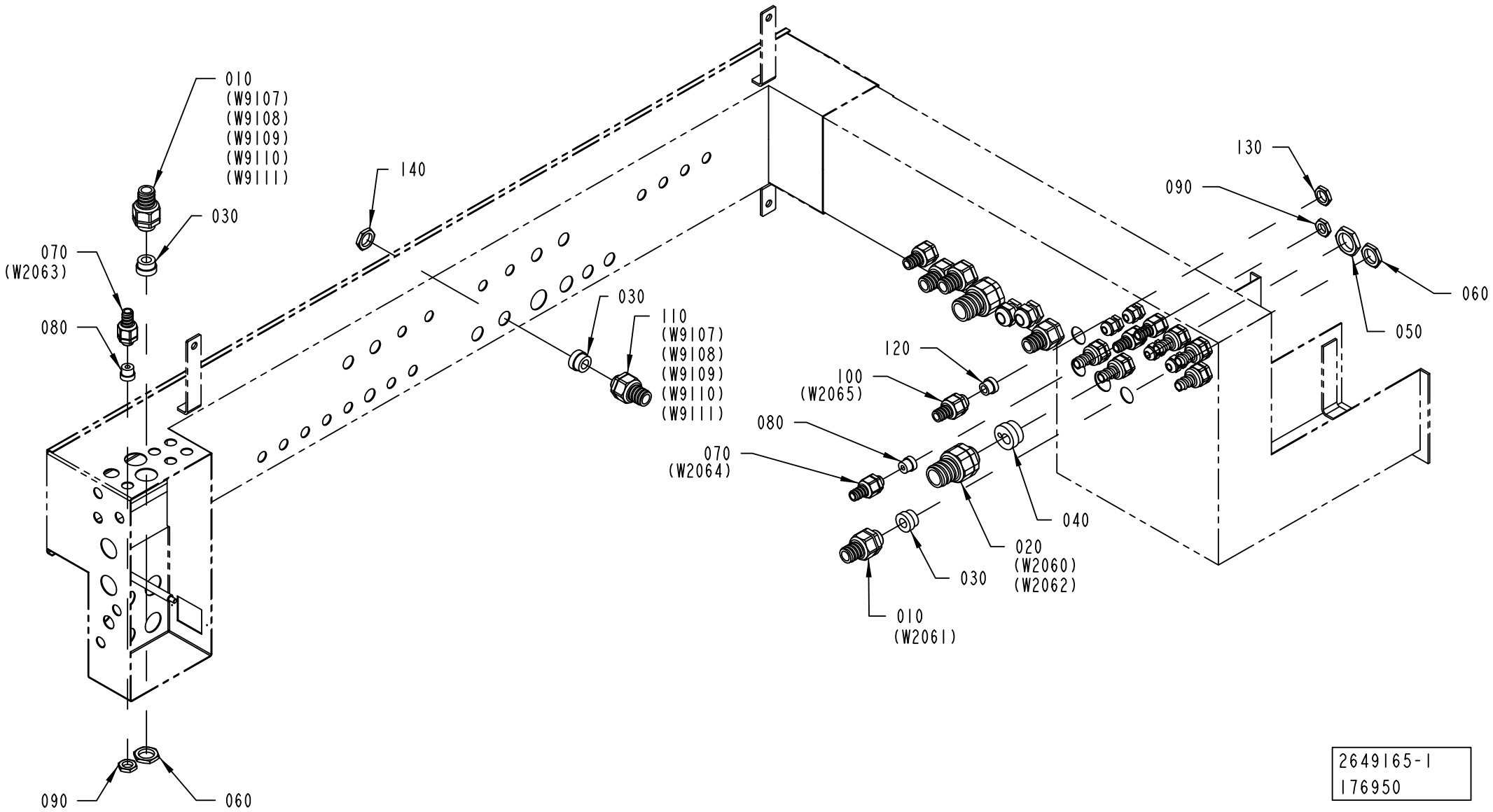

2649165-1
176950

ECM: 387754 - 20090402
Group number: 2649165-0100
Assembly Drawing: 2649165-1_1_AB

Pos	Part No	UN	Qty	Description	Page No
-					
010	353243-0005		2	HOSE GLAND W/O INSERT PG16 EXTENDED	
020	353243-0007		1	HOSE GLAND W/O INSERT PG21 EXTENDED	
030	353249-0013		3	INSERT, SINGLE HOLE, EK 154/13	
040	2649167-0000		1	INSERT	
050	90099-0119		1	NUT, PR 28,3 (PG21)	
060	90099-0110		2	NUT, PR 22,5 (PG16)	
070	353243-0001		2	HOSE GLAND W/O INSERT PG9 EXTENDED	
080	353249-0008		2	INSERT, SINGLE HOLE, EK 152/7	
090	90099-0104		2	NUT, PR 15,2 (PG9)	
100	353243-0003		1	HOSE GLAND W/O INSERT PG11 EXTENDED	
110	353243-0004		1	HOSE GLAND W/O INSERT PG13,5 EXTENDED	
120	353249-0011		1	INSERT, SINGLE HOLE, EK 153/11	
130	90099-0117		1	NUT, PR 18,6 (PG11)	
140	90099-0118		1	NUT, PR 20,4 (PG13,5)	

Pos	Part No	UN	Qty	Description	Page No

COVERING PANEL

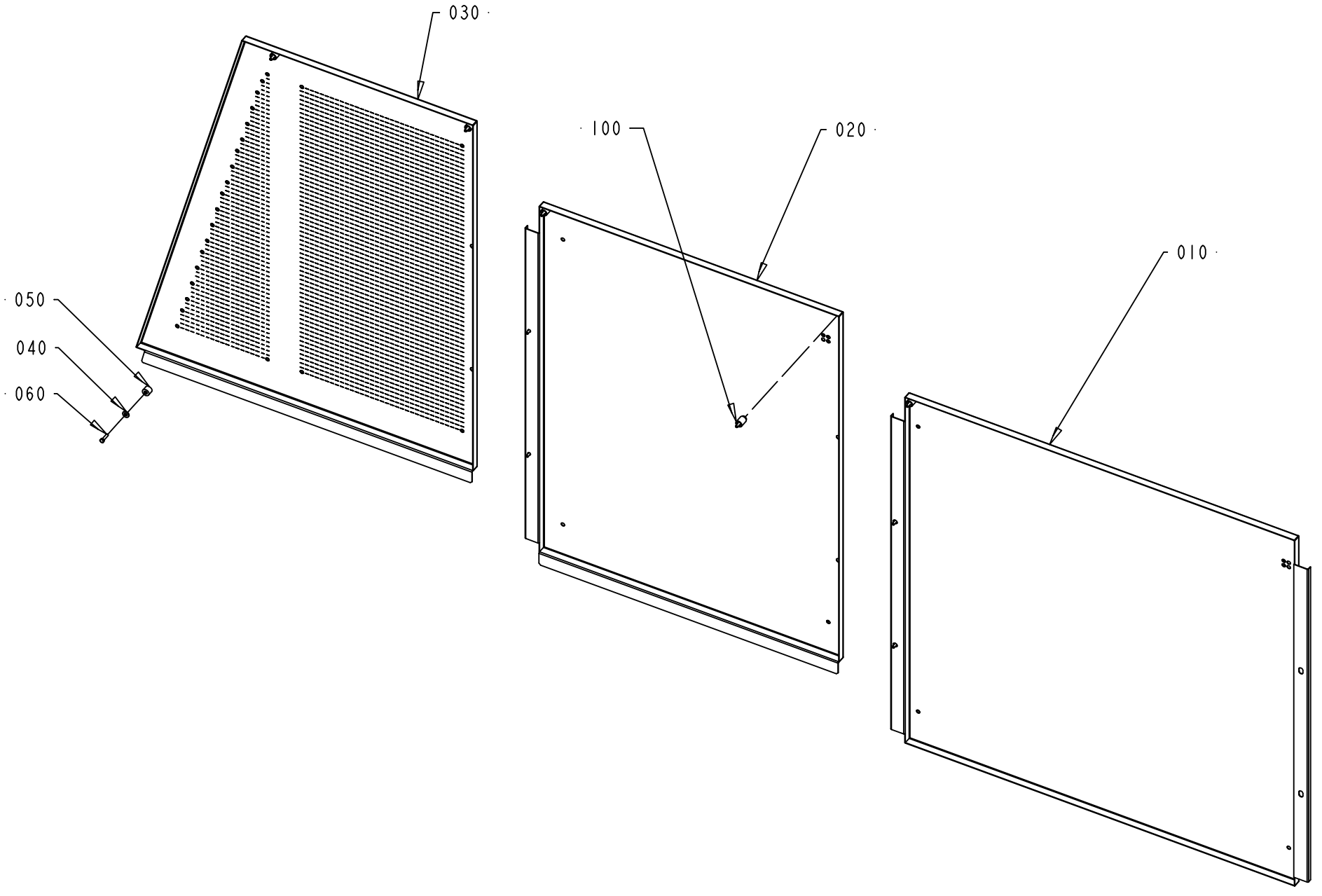

ECM: 344919 - 20080701
Group number: 2533766-0100
Assembly Drawing: 2533766-1_1_AB

Pos	Part No	UN	Qty	Description	Page No
A3/FLEX TGA					
010	2533767-0000		1	COVERING PLATE	
A3/FLEX TBA, A3/FLEX TPA					
010	2533763-0000		1	COVERING PANEL	
Common Parts					
020	2533768-0000		1	COVERING PLATE	
030	2539471-0000		1	COVERING PLATE	
040	1260303-0000		1	WASHER	
050	1037552-0000		1	SPACER	
060	312105-0372		1	SCREW M6S ISO 4017 M6X25 A480	
100	90226-0458		9	MOUNTING SCREW	

Pos	Part No	UN	Qty	Description	Page No

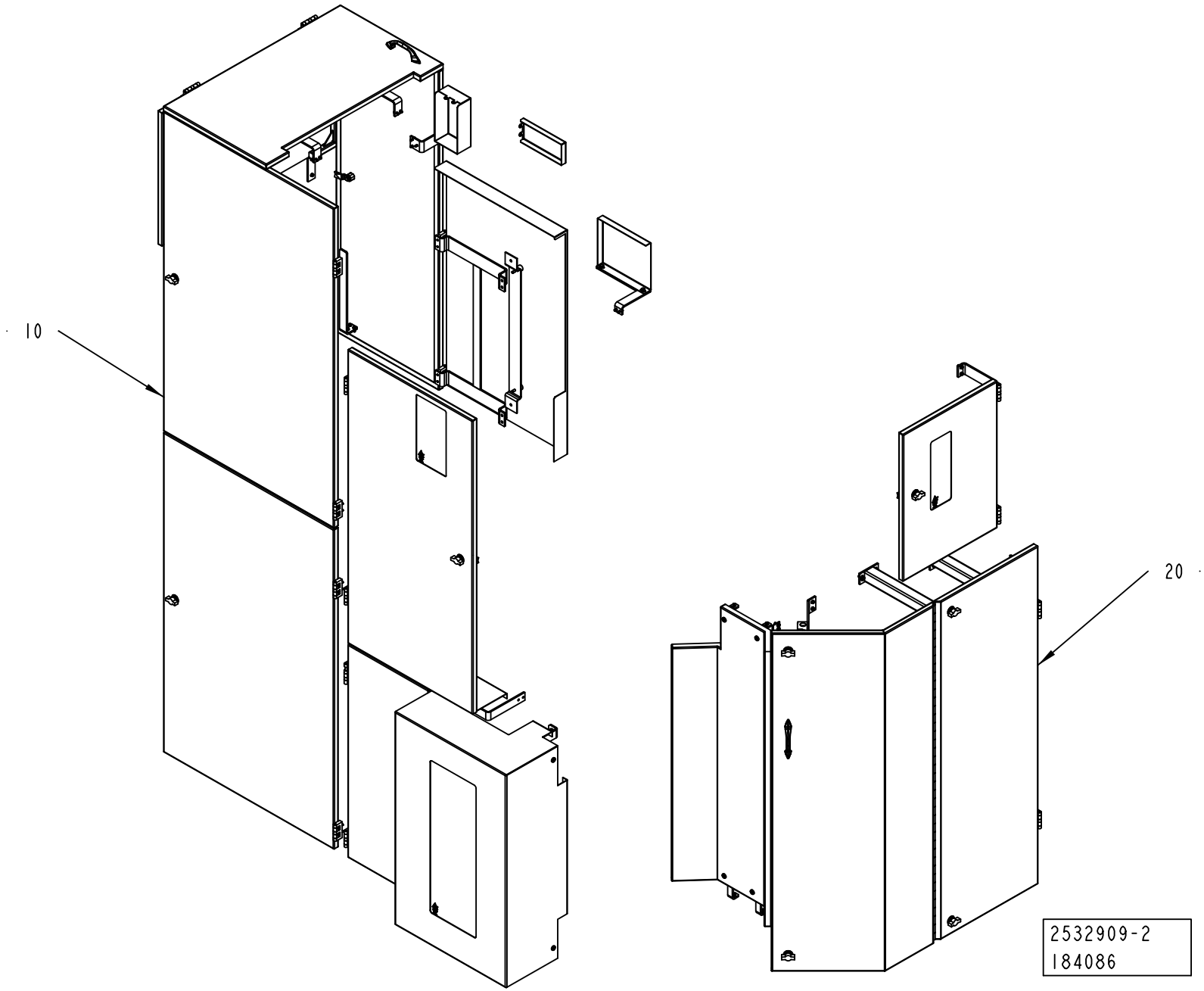
10
20
2532909-2
184086

ECM: 315329 - 20070628
Group number: 2532909-0200
Assembly Drawing: 2532909-2_1_AA

Pos	Part No	UN	Qty	Description	Page No
-					
010	2529760-0250		1	COVERING PANEL	**1-419**
020	2545639-0250		1	COVERING PANEL	**1-421**

Pos	Part No	UN	Qty	Description	Page No

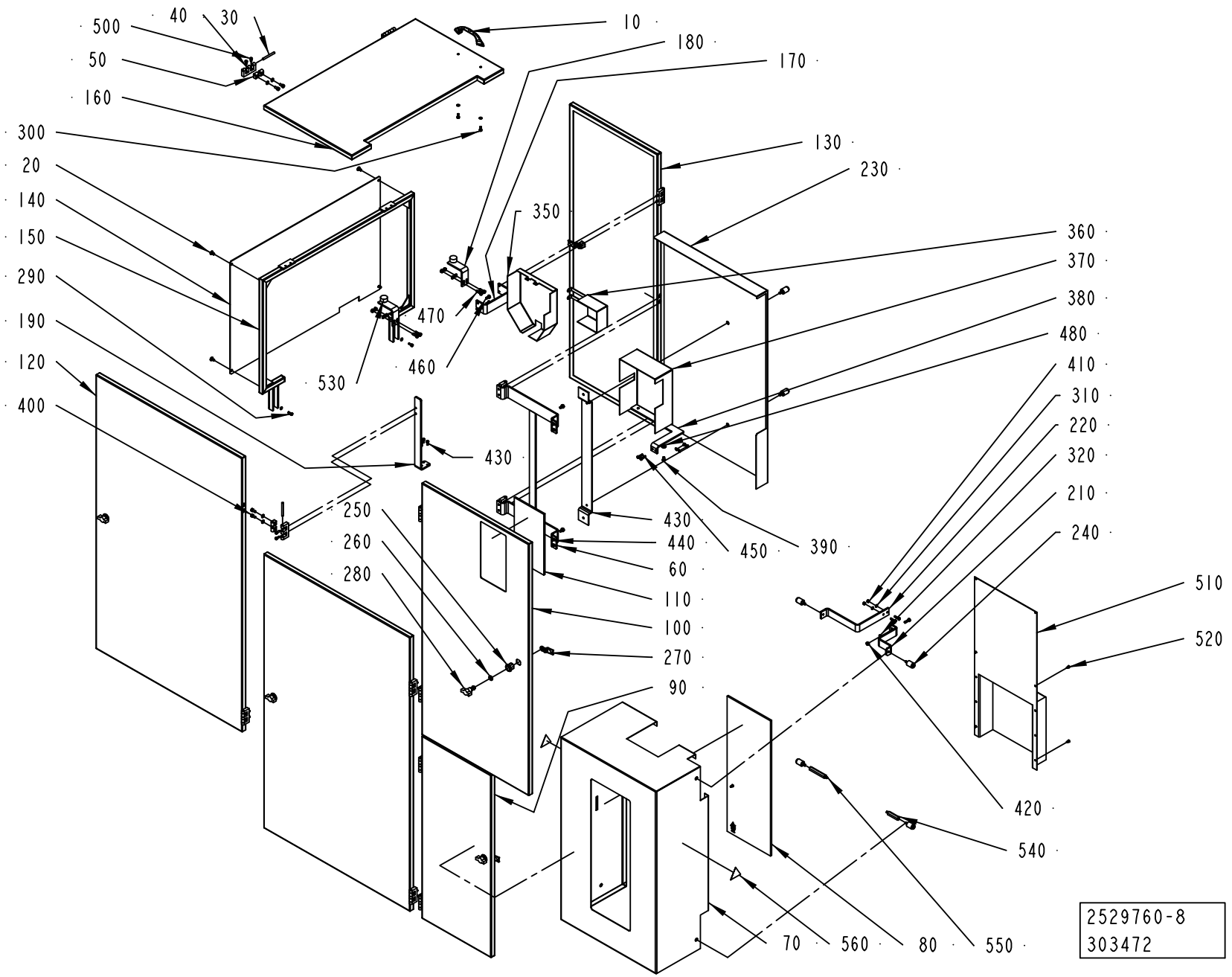
500
40
30
50
160
300
20
140
150
290
190
120
400
10
180
170
130
230
350
360
370
380
480
410
310
220
320
210
240
470
460
530
430
250
260
280
430
440
60
110
100
270
90
450
390
510
520
420
540
70
560
80
550
2529760-8
303472

ECM: 304241 - 20070417
Group number: 2529760-0250
Assembly Drawing: 2529760-8_1_AA

Pos	Part No	UN	Qty	Description	Page No
A3/FLEX					
020	927354-0000		4	SCREW	
070	2710561-0000		1	COVERING PANEL	
	2874763-0000		*1*	*GLASS PANE*	
080	2874763-0000		1	GLASS PANE	
090	2710564-0000		1	DOOR	
140	2711249-0000		1	PANEL	
210	2711266-0000		1	BRACKET	
220	2711267-0000		1	BRACKET	
230	2712433-0000		1	COVERING PANEL	
240	90226-0458		6	MOUNTING SCREW	
295	312105-0368		6	SCREW M6S ISO 4017 M6X16 A480	
310	315105-0146		10	WASHER BRB 5,3X10 RFR	
320	315105-0153		27	WASHER BRB 6,4X12 RFR	
410	312605-0314		4	HEXAGON NUT, M6M M5 A280	
420	312605-0316		5	HEXAGON NUT, M6M M6 A280	
510	2619607-0000		1	COVER	
520	312105-0287		4	SCREW M6S ISO 4017 M4X8 A470	
540	2743319-0000		1	SUPPORT	
550	2743320-0000		1	SUPPORT	
560	90459-6084		2	WARNING SIGN ISO, HAZARDOUS ROTATING BEL	
Common Parts					
010	7309-0000		1	HANDLE	
030	988685-0000		13	PIN	
040	1035792-0000		13	E-HINGE	
050	1129770-0000		26	BLOCKING PIECE	
060	2509658-0000		1	BRACKET	
100	2711243-0000		1	COVERING PANEL	
110	2874761-0000		1	GLASS PANE	
120	2711246-0000		2	COVERING PANEL	
130	2711248-0000		1	DOOR	
150	2711250-0000		1	FRAME	
160	2711255-0000		1	COVERING PANEL	
170	2711261-0000		1	BRACKET	
180	2711262-0000		2	BRACKET	
190	2711263-0000		1	BRACKET	
250	90237-0319		5	LOCK HOUSING, 1000-U134	
260	90237-0323		5	LOCK O-RING, 1000-24	
270	90237-0335		5	LOCKING CATCH	
280	90237-0337		5	LOCK HANDLE FOR 90237-319	
290	312105-0328		4	SCREW M6S ISO 4017 M5X14 A480	
300	312115-0327		28	SCREW ISO4762 M5X12 A4 80	
350	2788635-0000		1	TOUCH GUARD	
360	2788636-0000		1	TOUCH GUARD	
370	2788637-0000		1	COVERING PANEL	
380	2788638-0000		1	BRACKET	
390	312105-0364		4	SCREW M6S ISO 4017 M6X10 A480	
400	312115-0366		26	SCREW ISO4762 M6X12 A4 80	
430	2509659-0000		1	PLATE	
440	312105-0327		3	SCREW M6S ISO 4017 M5X12 A480	
450	312105-0329		4	SCREW M6S ISO 4017 M5X16 A480	
460	312105-0331		5	SCREW M6S ISO 4017 M5X20 A480	
470	312105-0366		5	SCREW M6S ISO 4017 M6X12 A480	
480	312105-0370		2	SCREW M6S ISO 4017 M6X20 A480	
490	315105-0165		2	WASHER BRB 8,4X16 RFR	
500	312115-0323		4	SCREW ISO4762 M5X8 A4 80	
530	90347-0034		2	VIBRATION DAMPER	

Machine Type | Group Description | Used-In | Group Number | Page No

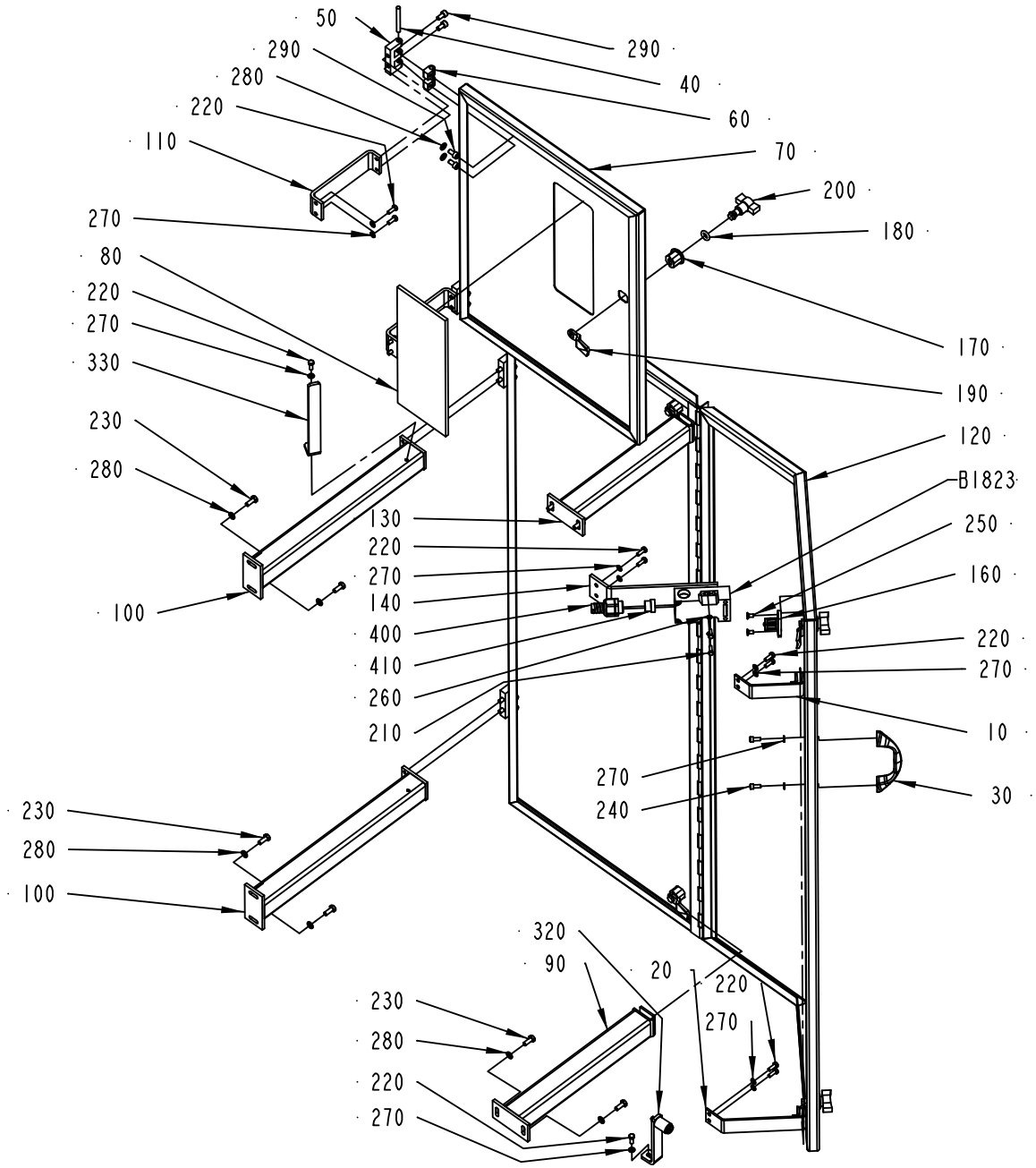
50
290
280
220
110
270
80
220
270
330
230
280
100
290
40
60
70
200
180
170
190
120
B1823
250
160
220
270
10
30
130
220
270
140
400
410
260
210
270
240
230
280
100
320
90
20
220
270
230
280
220
270

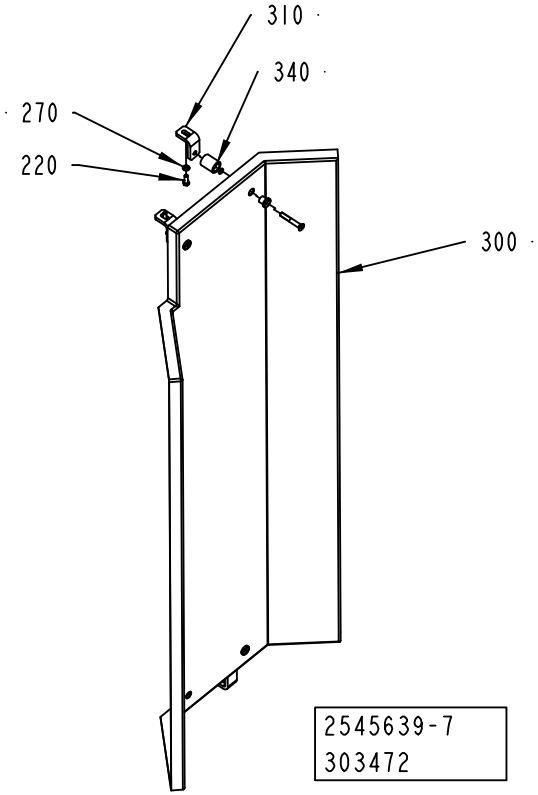
310
340
270
220
300
2545639-7
303472

ECM: 304240 - 20070417
Group number: 2545639-0250
Assembly Drawing: 2545639-7_1_AA

Pos	Part No	UN	Qty	Description	Page No
-					
010	2711256-0000		1	BRACKET	
020	2711257-0000		1	BRACKET	
030	7309-0000		1	HANDLE	
040	988685-0000		4	PIN	
050	1035792-0000		4	E-HINGE	
060	1129770-0000		8	BLOCKING PIECE	
070	2710558-0000		1	COVERING PANEL	
080	2874762-0000		1	GLASS PANE	
090	2711258-0000		1	FRAME	
100	2711259-0000		2	FRAME	
110	2711260-0000		2	BRACKET	
120	2711269-0000		1	DOOR	
130	2712434-0000		1	FRAME	
140	2712435-0000		1	BRACKET	
160	90044-0310		1	KEY FOR SAFETY SWITCH AZ 15/16 B1	
170	90237-0319		5	LOCK HOUSING, 1000-U134	
180	90237-0323		5	LOCK O-RING, 1000-24	
190	90237-0335		5	LOCKING CATCH	
200	90237-0337		5	LOCK HANDLE FOR 90237-319	
210	312105-0292		2	SCREW M6S ISO 4017 M4X14 A470	
220	312105-0328		15	SCREW M6S ISO 4017 M5X14 A480	
230	312105-0368		8	SCREW M6S ISO 4017 M6X16 A480	
240	312115-0327		2	SCREW ISO4762 M5X12 A4 80	
250	312155-0325		2	SCREW DIN 7991 MF6S M5X10 A4 70	
260	315105-0136		2	WASHER BRB 4,3X8 RFR	
270	315105-0146		17	WASHER BRB 5,3X10 RFR	
280	315105-0153		16	WASHER BRB 6,4X12 RFR	
290	312115-0366		16	SCREW ISO4762 M6X12 A4 80	
300	2710560-0000		1	COVER	
310	2710563-0000		2	BRACKET	
320	2711240-0000		2	BRACKET	
330	2711242-0000		1	BRACKET	
340	90226-0458		4	MOUNTING SCREW	
400	90458-0429		1	HOSE GLAND W/O INSERT M20 EXTENDED	
410	353249-0011		1	INSERT, SINGLE HOLE, EK 153/11	
B1823	90459-0472		1	KEY SAF.SW. AZ 16 02ZVRK-M20-2152-2254	

Pos	Part No	UN	Qty	Description	Page No

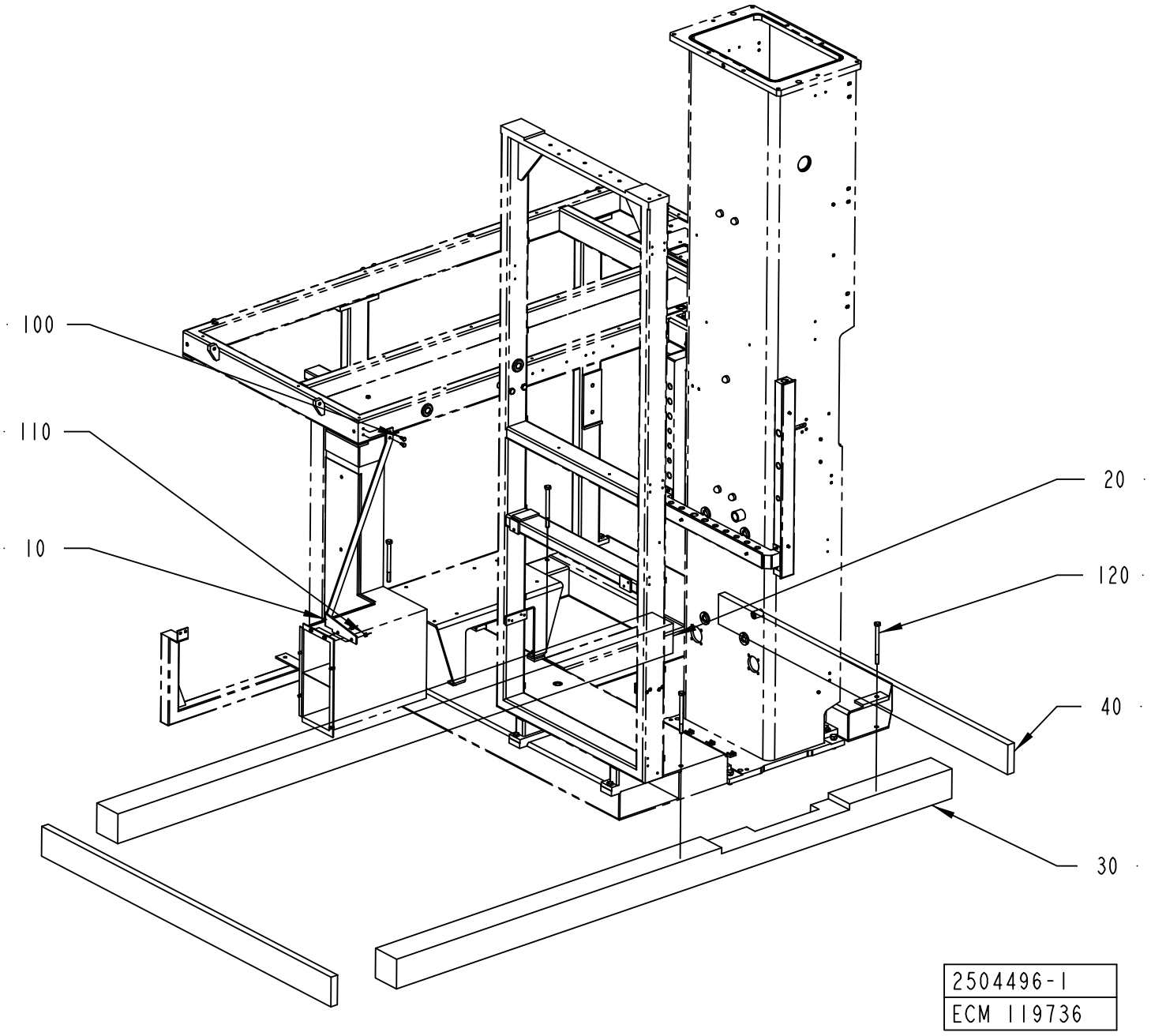
100
110
10
20
120
40
30
2504496-1
ECM 119736

ECM: 387790 - 20090402
Group number: 2504496-0100
Assembly Drawing: 2504496-1_1_AA

Pos	Part No	UN	Qty	Description	Page No
-					
010	1558845-0000		1	BRACKET	
020	1140685-0000		1	BEAM	
030	2541656-0000		1	BEAM	
040	2541657-0000		2	BEAM	
100	312105-0366		4	SCREW M6S ISO 4017 M6X12 A480	
110	312605-0316		2	HEXAGON NUT, M6M M6 A280	
120	312230-0150		4	SCREW HEX.HEAD WOOD T6S 10X160 SS	

Pos	Part No	UN	Qty	Description	Page No

Tetra Pak

SPC
Spare Parts Catalogue

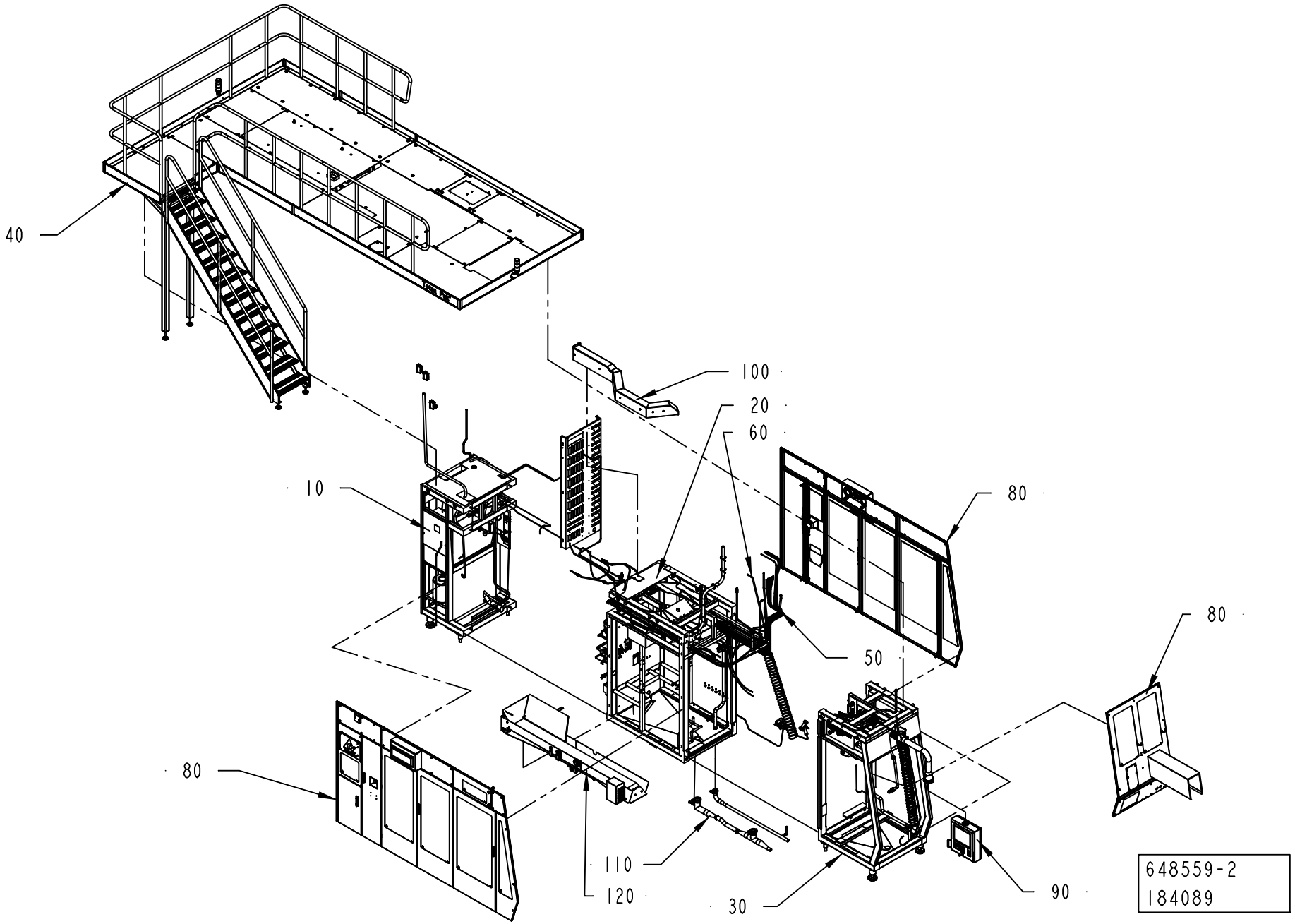
40
100
20
60
10
80
80
50
80
110
120
30
90
648559-2
184089

ECM: 274237 - 20061101
Group number: 648559-0250
Assembly Drawing: 648559-2_1_AA

Pos	Part No	UN	Qty	Description	Page No
A3/FLEX					
010	2504779-0100		1	REAR MODULE	**2-5, 2-7**
Common Parts					
020	2504785-0250		1	CENTRAL MODULE	**2-61**
030	2504793-0150		1	FRONT MODULE	**2-131**
040	2550139-0100		1	PLATFORM	**2-201, 2-203, 2-205, 2-207, 2-209, 2-211**
050	2504917-0100		1	PIPE WORK-WATER	**2-237**
060	2504918-0100		1	PNEUMATIC SYSTEM	**2-257, 2-259**
080	2504920-0100		1	DOORS AND COVERS	**2-261, 2-263**
090	2518146-0100		1	TPOP PANEL 15"	**2-337**
100	2504791-0100		1	CABLE DUCT	**2-343, 2-345**
110	2519570-0100		1	DRAINING	**2-347**
120	2542325-0100		1	WASTE CONVEYOR	**2-349, 2-351, 2-353**

Pos	Part No	UN	Qty	Description	Page No

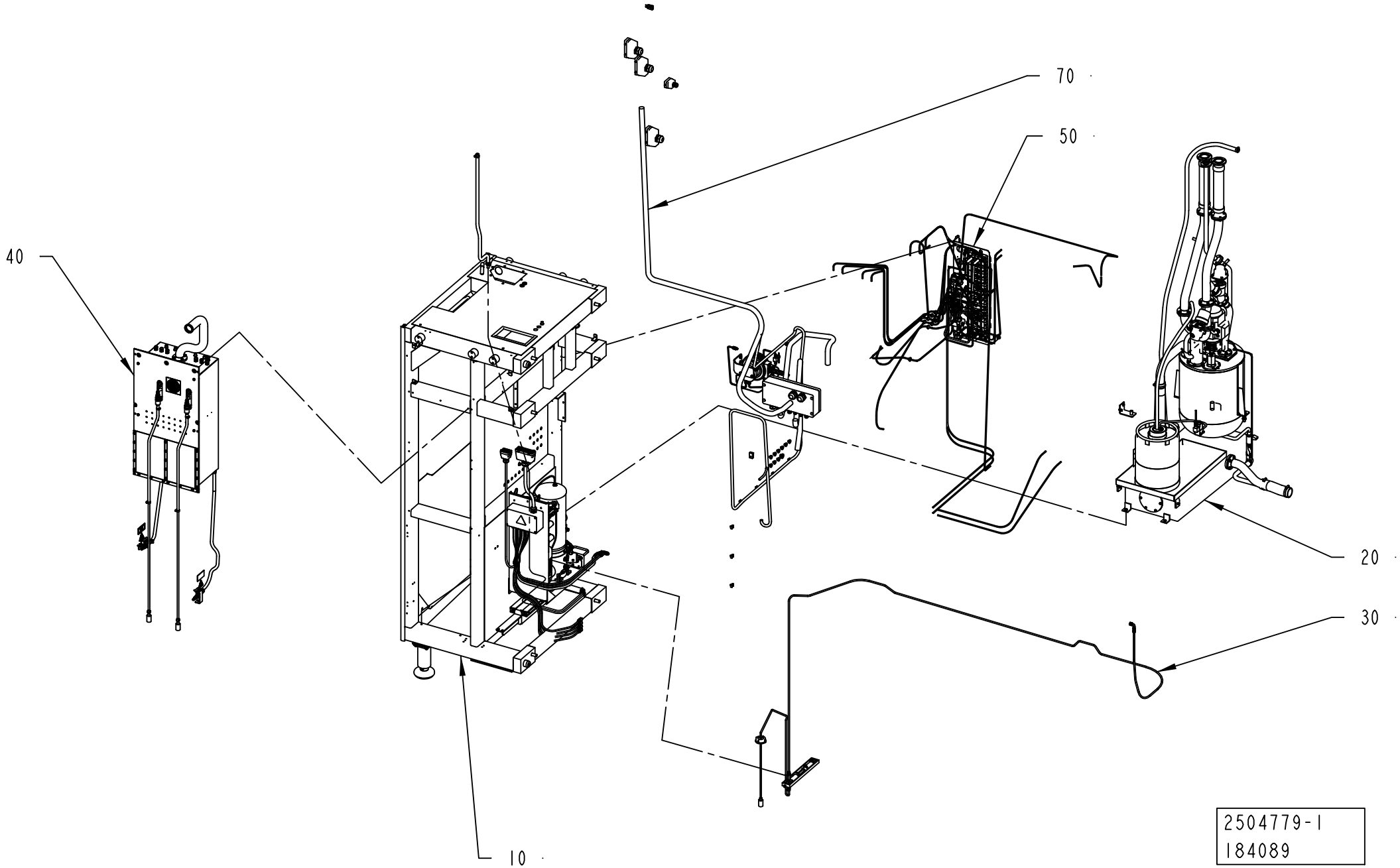
70
50
40
20
30
10
2504779-1
184089

ECM: 192976 - 20050620
Group number: 2504779-0100
Assembly Drawing: 2504779-1_1_AE

This list covers pages from 2-4 to 2-7

Pos	Part No	UN	Qty	Description	Page No
-					
010	2504780-0100		1	MACHINE BODY	**2-9**
020	2504781-0100		1	HYDROGEN PEROXIDE	**2-15**
030	2504782-0100		1	CHEMICALS	**2-35**
040	2544326-0100		1	INTEGRATED CLEANING UNIT	**2-37**
050	2528457-0100		1	PNEUMATIC SYSTEM	**2-41**
070	2528455-0100		1	ELECTRIC EQUIPMENT	**2-51**

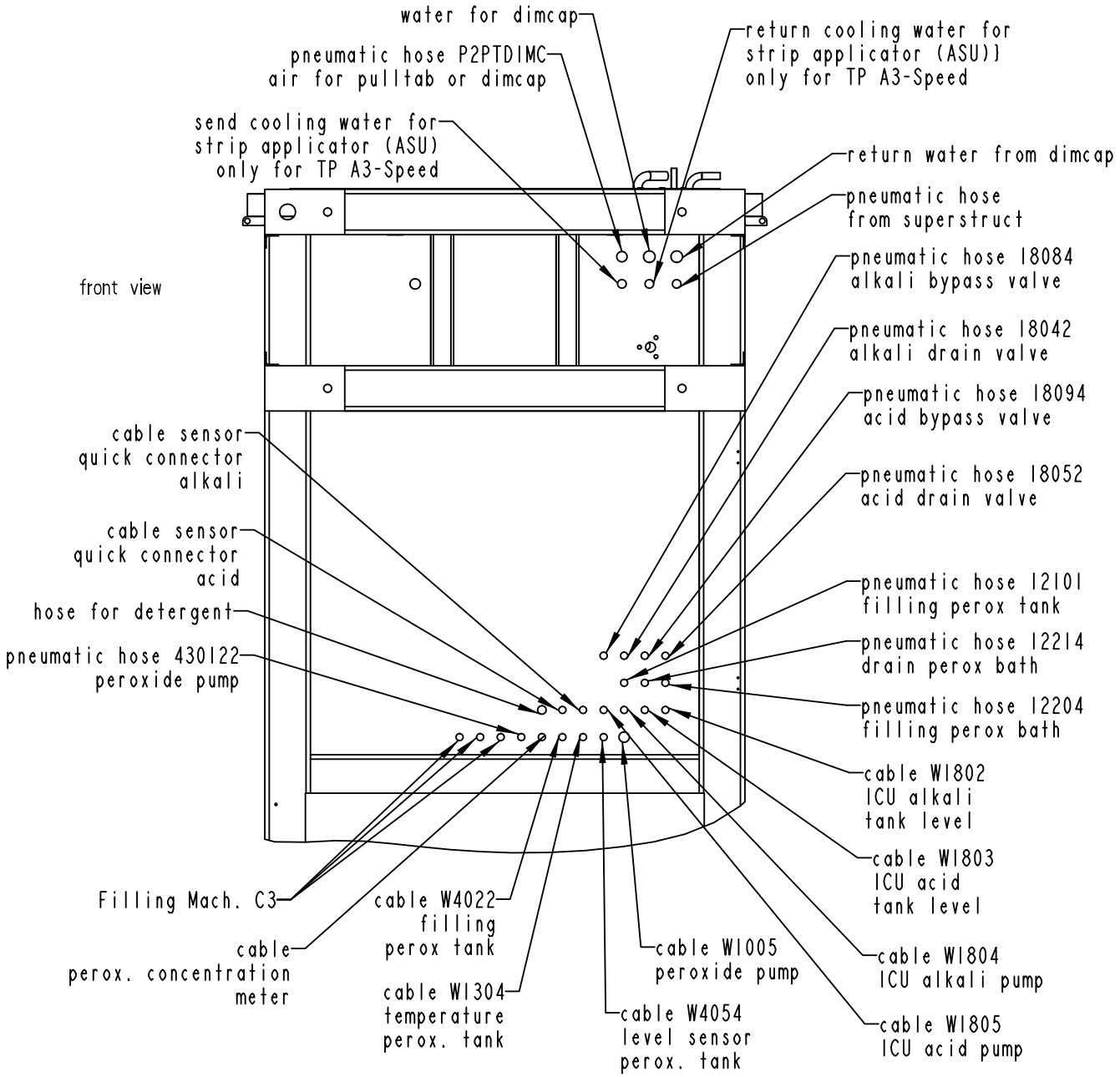

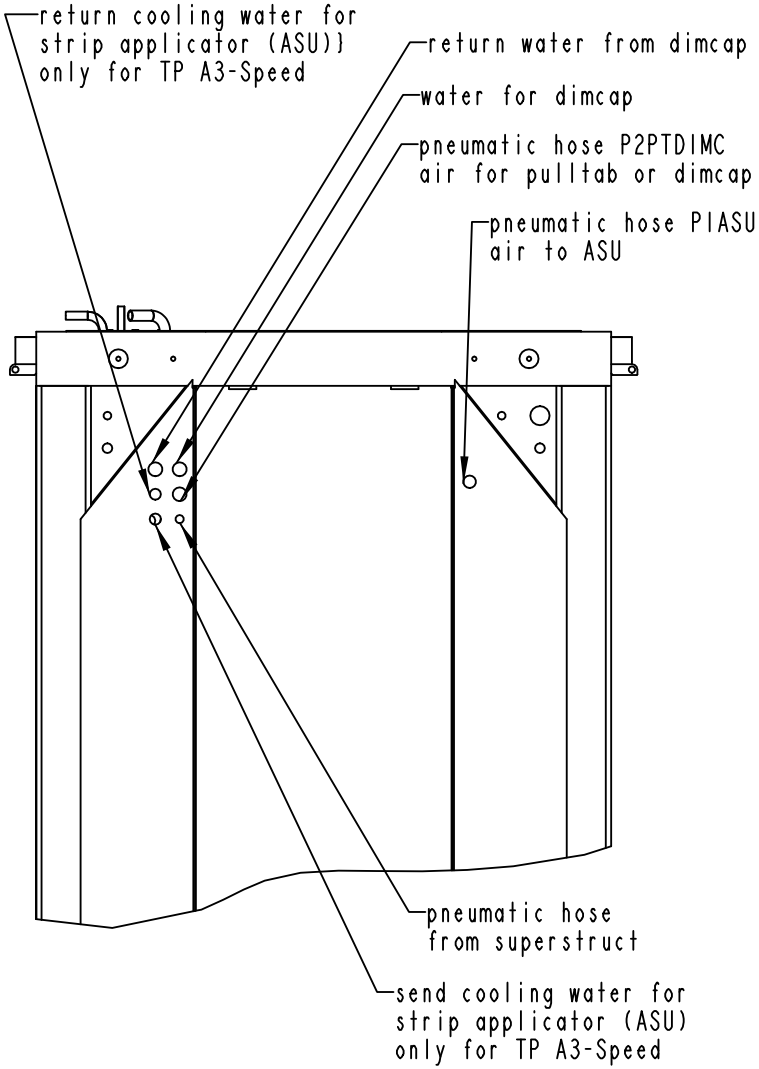

2504779-1
184089

ECM: 192976 - 20050620
Group number: 2504779-0100
Assembly Drawing: 2504779-1_2_AE

This list covers pages from 2-4 to 2-7

Pos	Part No	UN	Qty	Description	Page No
-					
010	2504780-0100		1	MACHINE BODY	**2-9**
020	2504781-0100		1	HYDROGEN PEROXIDE	**2-15**
030	2504782-0100		1	CHEMICALS	**2-35**
040	2544326-0100		1	INTEGRATED CLEANING UNIT	**2-37**
050	2528457-0100		1	PNEUMATIC SYSTEM	**2-41**
070	2528455-0100		1	ELECTRIC EQUIPMENT	**2-51**

Pos	Part No	UN	Qty	Description	Page No

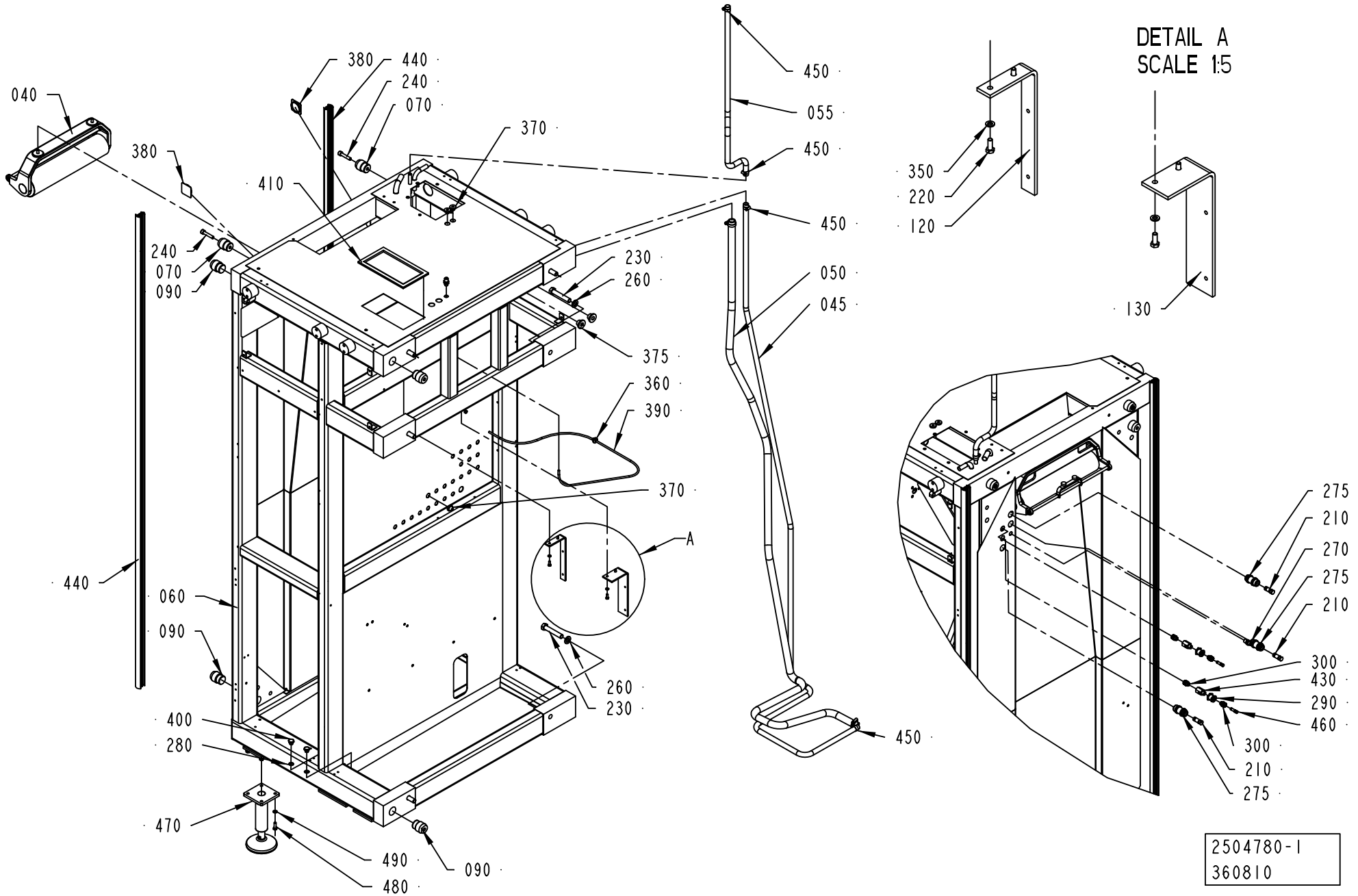
040
380
440
240
070
370
410
450
055
450
350
220
120
DETAIL A
SCALE 1:5
130
240
070
090
230
260
450
050
045
375
360
390
370
A
440
060
090
260
230
400
280
470
490
480
090
450
275
210
270
275
210
300
430
290
460
300
210
275
2504780-1
360810

ECM: 366159 - 20081002
Group number: 2504780-0100
Assembly Drawing: 2504780-1_1_AJ

Pos	Part No	UN	Qty	Description	Page No
A3/FLEX					
055	90166-0121	MM	2100	HOSE	
Common Parts					
040	2504784-0200		1	BENDING ROLLER	**2-11**
045	90166-0121	MM	3200	HOSE	
050	2514204-0100		1	DRAINING	**2-13**
060	2504435-0000		1	MACHINE BODY	
070	591341-0000		2	PIN	
090	2506636-0000		4	PIN	
100	90015-0023		2	LEAD-IN, TET7-10, E-1458019	
120	2683974-0000		1	HOLDER	
130	2683975-0000		1	HOLDER	
210	342715-0106		3	BLIND PLUG 14 MM	
220	312105-0368		4	SCREW M6S ISO 4017 M6X16 A480	
230	312105-0638		6	SCREW M6S ISO 4014 M16X90 A480	
240	312115-0501		2	SCREW ISO4762 M10X50 A4 80	
260	315105-0186		6	WASHER BRB 17X30 RFR	
270	342768-0102		2	BULKHEAD CONNECTOR, 6 MM	
275	342768-0110		3	BULKHEAD CONNECTOR, 14 MM	
280	315237-0110		2	WASHER,PL.RND.AL.13,5/18,H=1,5	
290	342767-0104		2	CONN. BULKHEAD G1/4	
300	90055-0274		4	STRAIGHT COUPLING, D=8 MM - G1/4"	
350	315105-0153		4	WASHER BRB 6,4X12 RFR	
360	90015-0020		1	LEAD-IN, TET5-7, E-1458016	
370	90015-0023		1	LEAD-IN, TET7-10, E-1458019	
375	90015-0022		2	LEAD-IN, TET14-20, E-1458029	
380	90261-0070		2	PLASTIC PLUG SS 0082.31	
390	90166-0081	MM	1320	TUBE 6 MM PA BLUE	
400	90330-0026		2	PLUG, EXT. G-THREAD, G1/4	
410	90143-0097	MM	700	SELF GRIPPING GASKET, 1011-24	
430	90600-0775		2	BALL VALVE G1/4, 406F-1/4"	
440	90459-1009	MM	4500	RUBBER STRIP, 1025088988	
450	342991-0102		4	HOSE CLIP,WORM DRIVE TYPE (16)-19	
460	342715-0102		1	BLIND PLUG 6 MM	
470	90600-0724		2	FOOT 25000N, R0773 611223	
480	312105-0453		8	SCREW M6S ISO 4017 M8X25 A480	
490	315105-0165		8	WASHER BRB 8,4X16 RFR	

Pos	Part No	UN	Qty	Description	Page No

Machine Type | Group Description | Used-In | Group Number | Page No

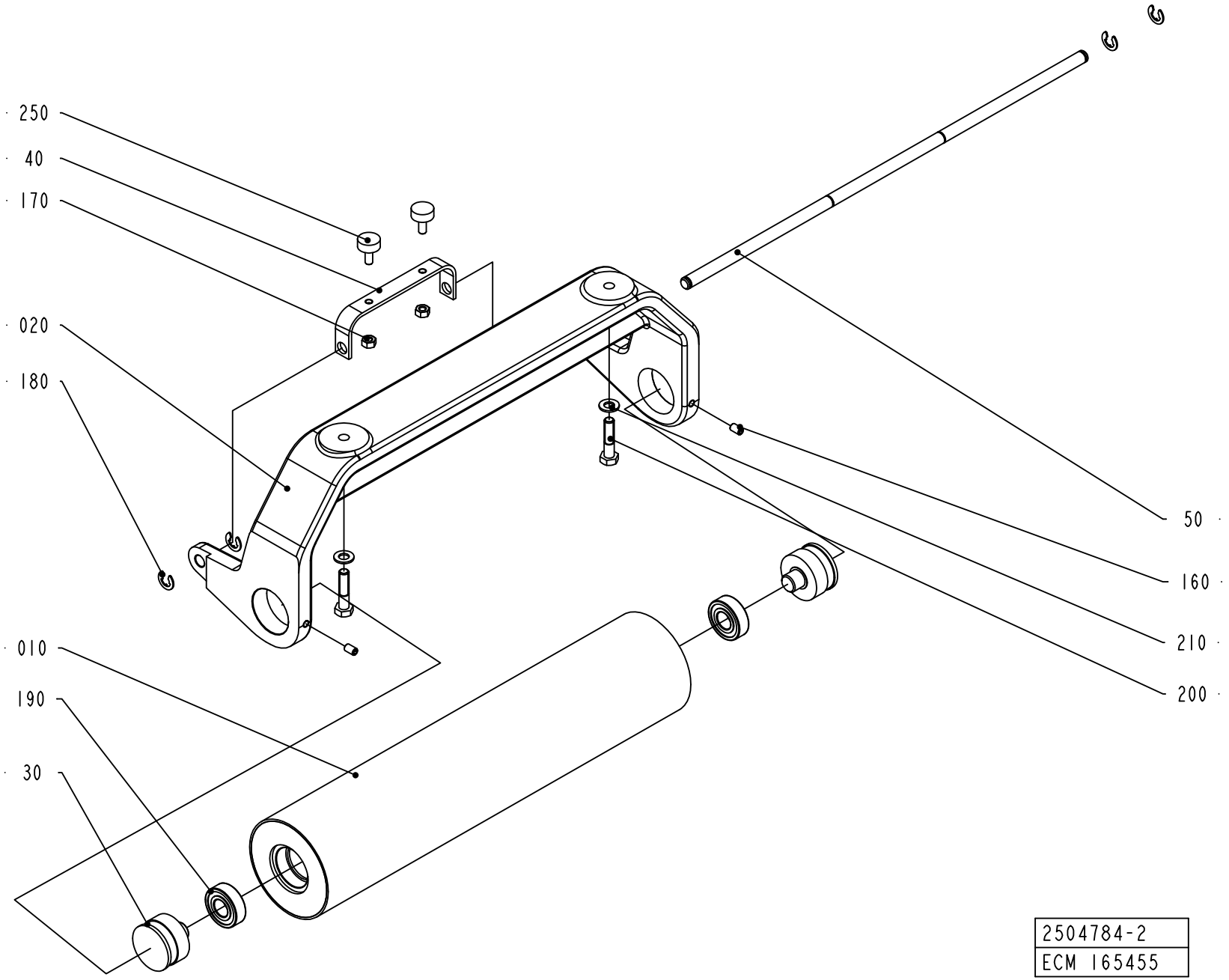
250
40
170
020
180
010
190
30
50
160
210
200
2504784-2
ECM 165455

ECM: 379821 - 20090114
Group number: 2504784-0200
Assembly Drawing: 2504784-2_1_AA

Pos	Part No	UN	Qty	Description	Page No
-					
010	2605877-0000		1	BENDING ROLLER	
020	2605879-0000		1	CANTILEVER	
030	1037012-0000		2	AXLE PIN	
040	1041603-0000		1	BRACKET	
050	2605880-0000		1	SHAFT	
160	312318-0364		2	SCREW ISO4029 M6X10 A4	
170	312605-0316		2	HEXAGON NUT, M6M M6 A280	
180	315755-0801		4	RETAINING RING SHAFT DIN 6799 8 A2	
190	321313-0102		2	BALL BEARING, 15X35X11 MM	
200	312105-0457		2	SCREW M6S ISO 4014 M8X35 A480	
210	315105-0165		2	WASHER BRB 8,4X16 RFR	
250	90347-0007		2	VIBRATION DAMPER	

Pos	Part No	UN	Qty	Description	Page No

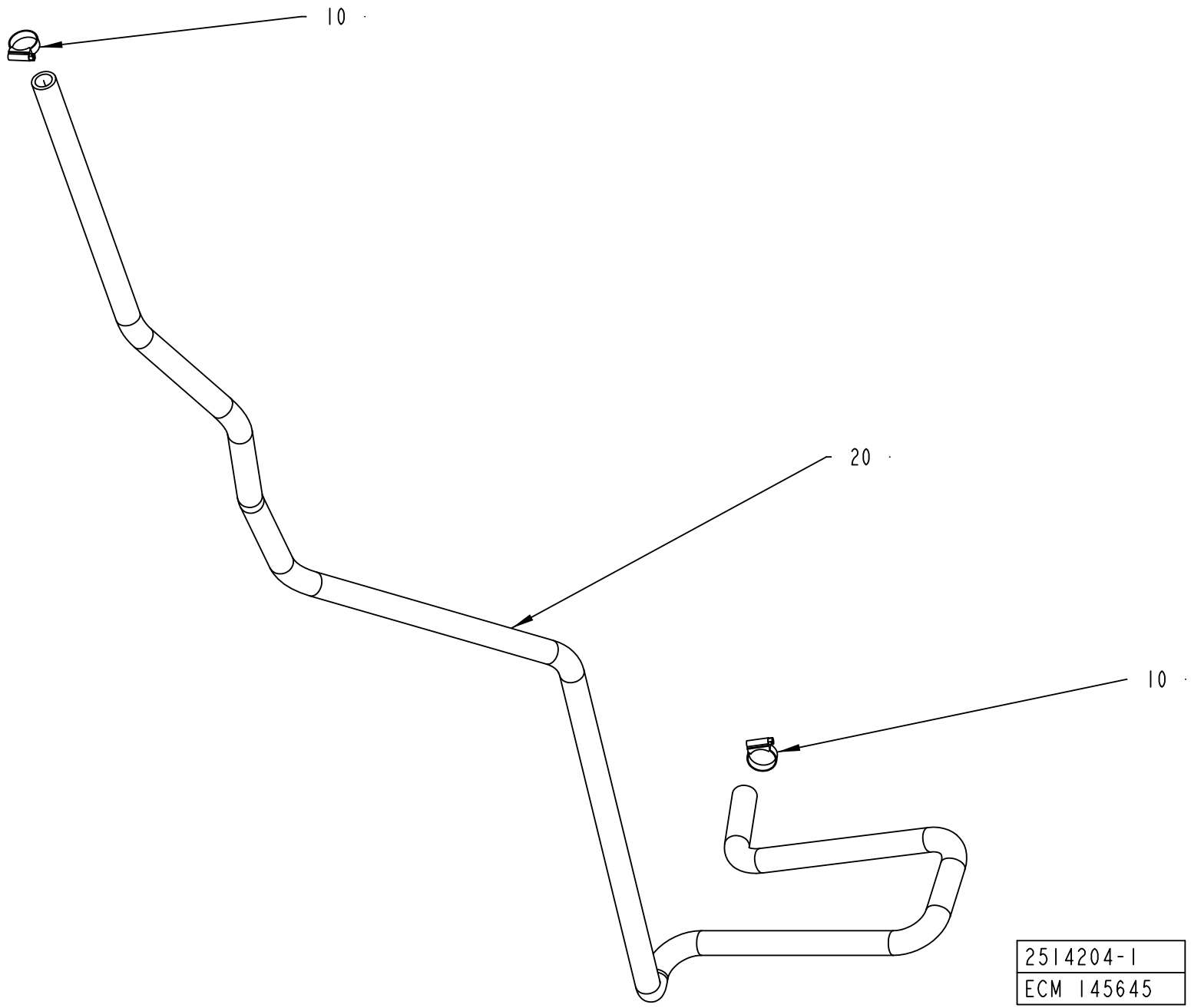
10
20
10
2514204-1
ECM 145645

ECM: 189743 - 20041104
Group number: 2514204-0100
Assembly Drawing: 2514204-1_1_AB

Pos	Part No	UN	Qty	Description	Page No
A3/FLEX					
020	90166-0060	MM	2450	HOSE 19/26-27 REINF.PVC	
Common Parts					
010	342991-0105		2	HOSE CLIP,WORM DRIVE TYPE (27)-30	

Pos	Part No	UN	Qty	Description	Page No

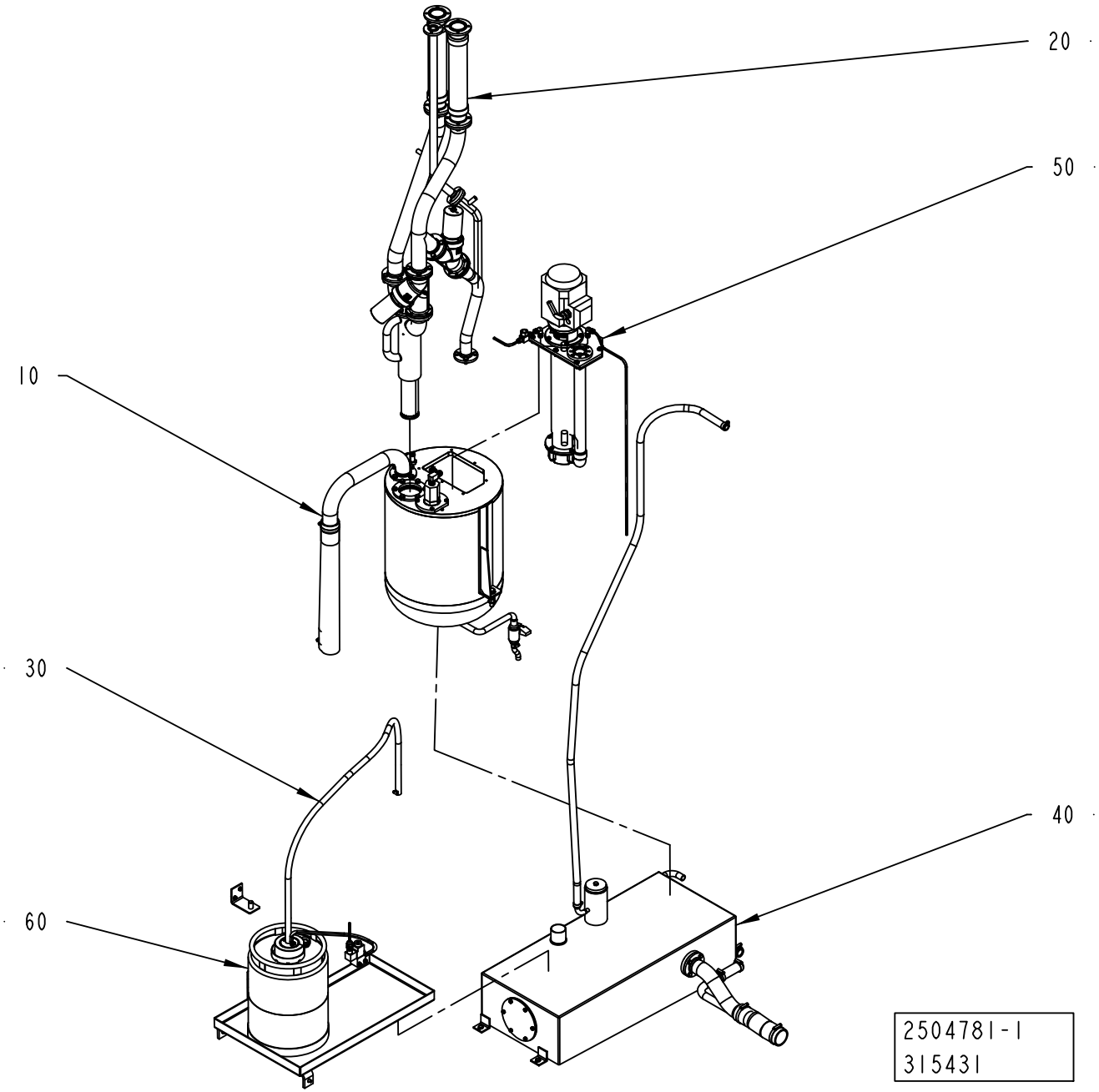
20
50
10
30
40
60
2504781-1
315431

ECM: 316488 - 20080101
Group number: 2504781-0100
Assembly Drawing: 2504781-1_1_AC

Pos	Part No	UN	Qty	Description	Page No
-					
010	1282894-0100		1	PEROXIDE TANK	**2-17, 2-19**
020	1282895-0200		1	PEROXIDE PIPE	**2-23**
030	2506637-0100		1	AIR PIPE-LINE	**2-25**
040	1282896-0100		1	TANK	**2-27**
050	2734100-0100		1	PEROXIDE PUMP	**2-31**
060	527898-0100		1	MKS CONTAINER H2O2	**2-33, 11-69**

Pos	Part No	UN	Qty	Description	Page No

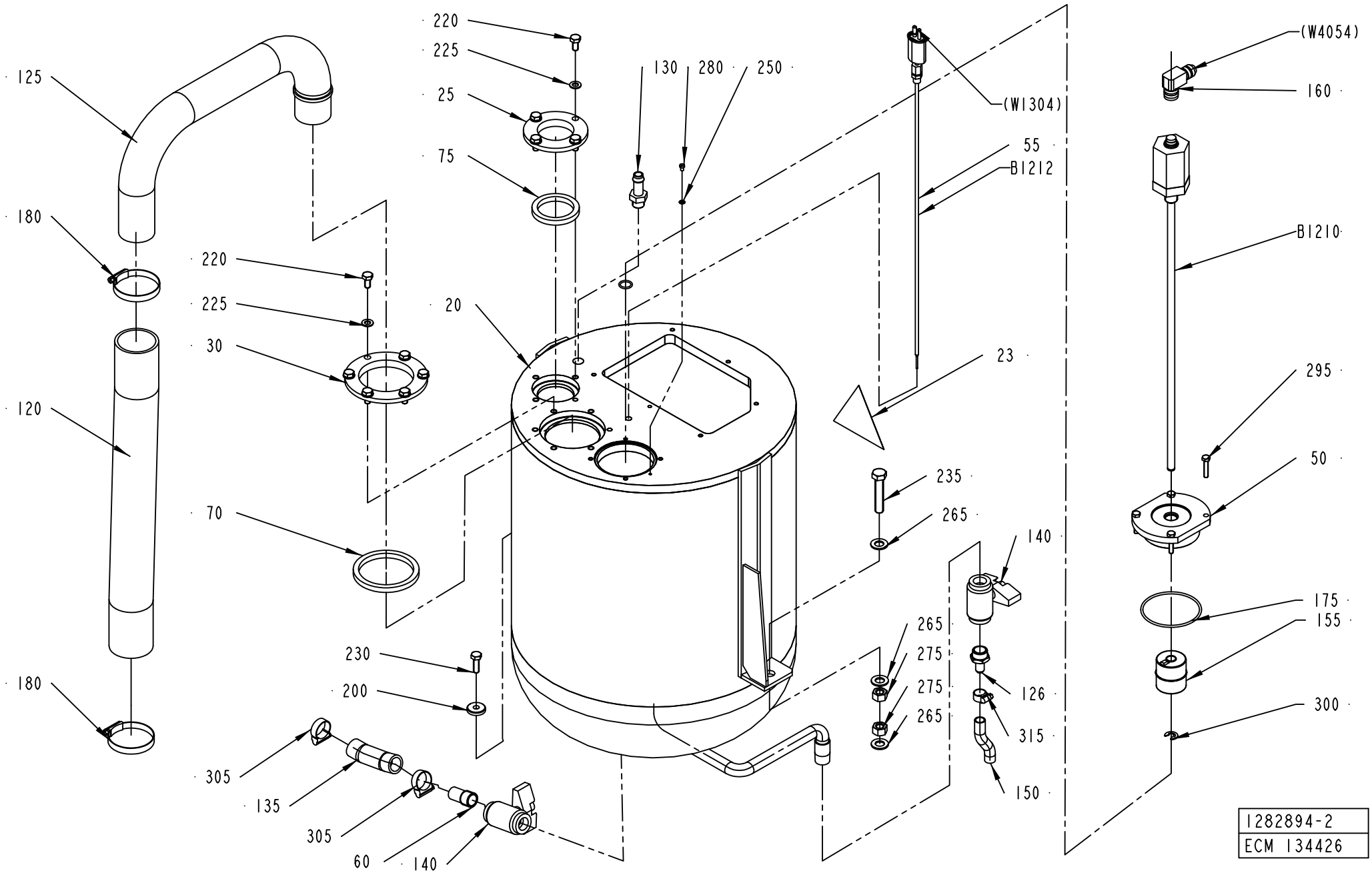
125
180
120
180
220
225
30
70
220
225
25
75
20
130
280
250
(W1304)
55
B1212
23
235
265
140
265
275
275
265
126
315
150
230
200
305
135
305
60
140
(W4054)
160
B1210
295
50
175
155
300
1282894-2
ECM 134426

ECM: 384941 - 20090128
Group number: 1282894-0100
Assembly Drawing: 1282894-2_1_AB

This list covers pages from 2-16 to 2-19

Pos	Part No	UN	Qty	Description	Page No
A3/FLEX DIMC/FLEX, A3/FLEX TBA 2000S NODIMC, A3/FLEX TBA 1890S NODIMC, A3/FLEX TBA 1400B NODIMC (See drawing on page: 2-18)					
127	2623721-0100		1	PEROXIDE REDUCER	**2-21**
A3/FLEX TBA 0200S NODIMC, A3/FLEX TBA 1000SQ NODIMC, A3/FLEX TBA 1000S NODIMC, A3/FLEX TBA 1000B NODIMC, A3/FLEX TBA 0500B NODIMC, A3/FLEX TPA 1000SQ NODIMC, A3/FLEX TBA 1500S NODIMC, A3/FLEX TBA 0200B NODIMC, A3/FLEX TBA 0250B NODIMC, A3/FLEX TBA 0330S NODIMC, A3/FLEX TPA 0330SQ NODIMC, A3/FLEX TPA 0500SQ NODIMC, A3/FLEX TBA 0250S NODIMC, A3/FLEX TBA 0200M NODIMC, A3/FLEX TBA 0500S NODIMC, A3/FLEX TPA 0200SQ NODIMC, A3/FLEX TPA 0250SQ NODIMC, A3/FLEX TPA 0750SQ NODIMC, A3/FLEX TBA 0200SQ NODIMC, A3/FLEX TBA 0250SQ NODIMC, A3/FLEX TGA 1000SQ NODIMC, A3/FLEX TGA 0500SQ NODIMC, A3/FLEX TGA 0750SQ NODIMC (See drawing on page: 2-16)					
050	1558327-0000		1	LID	
155	90458-2358		1	FLOAT, BTL2-S-4414-4Z	
160	90458-1595		1	CONNECTION, BKS-S 33M-00	
250	315105-0136		1	WASHER BRB 4,3X8 RFR	
300	315755-0110		1	RETAINING RING SHAFT DIN 6799 9 A2	
B1210	90459-0951		1	TRANSDUCER, BTL7-A110-M0400-B-S32	
Common Parts					
020	1255559-0000		1	PEROXIDE TANK	
023	359705-0004		1	WARNING SIGN ISO, DANGEROUS CHEMICALS	
025	1040840-0000		1	FLANGE	
030	1040841-0000		1	FLANGE	
055	1347704-0000		1	THERMOCOUPLE	
	90326-0306		*1*	*GLAND FITTING 9041-45-KS-KR.1/8" D=4,5MM*	
	1040890-0000		*1*	*THERMOCOUPLE*	
060	1037102-0000		1	SPACER PIPE	
070	1040852-0000		1	SEALING RING	
075	1040853-0000		1	SEALING RING	
120	1282899-0000		1	HOSE	
125	1282891-0000		1	PIPE	
126	1282906-0000		1	NIPPLE	
130	90055-0051		1	HOSE NIPPLE, EXT.THR. R3/8X13 MM	
135	90166-0151	MM	140	HOSE	
140	90187-0059		2	BALL VALVE FOR HYDR.PER. G1/2 3MM HOLE	
150	90166-0138	MM	85	HOSE	
175	927422-0016		1	O-RING 79.5X3 SILICONE	
180	342991-0110		2	HOSE CLIP,WORM DRIVE TYPE (54)-63	
200	315125-0165		1	WASHER TBRSB 8,4X26X5 A4	
220	312105-0449		10	SCREW M6S ISO 4017 M8X16 A480	
225	315105-0165		10	WASHER BRB 8,4X16 RFR	
230	312105-0453		1	SCREW M6S ISO 4017 M8X25 A480	
235	312109-0544		1	SCREW M6S ISO 4017 M12X60 A480	
265	315105-0178		3	WASHER BRB 13X24 RFR	
275	312605-0322		2	HEXAGON NUT, M6M M12 A280	
280	312125-0285		1	SCREW ISO 1207 M4X6 A4	
295	312109-0374		4	SCREW M6S ISO 4017 M6X30 A480	
305	342991-0104		2	HOSE CLIP,WORM DRIVE TYPE (23)-27	
315	342991-0101		1	HOSE CLIP,WORM DRIVE TYPE (13)-16	

Machine Type | Group Description | Used-In | Group Number | Page No

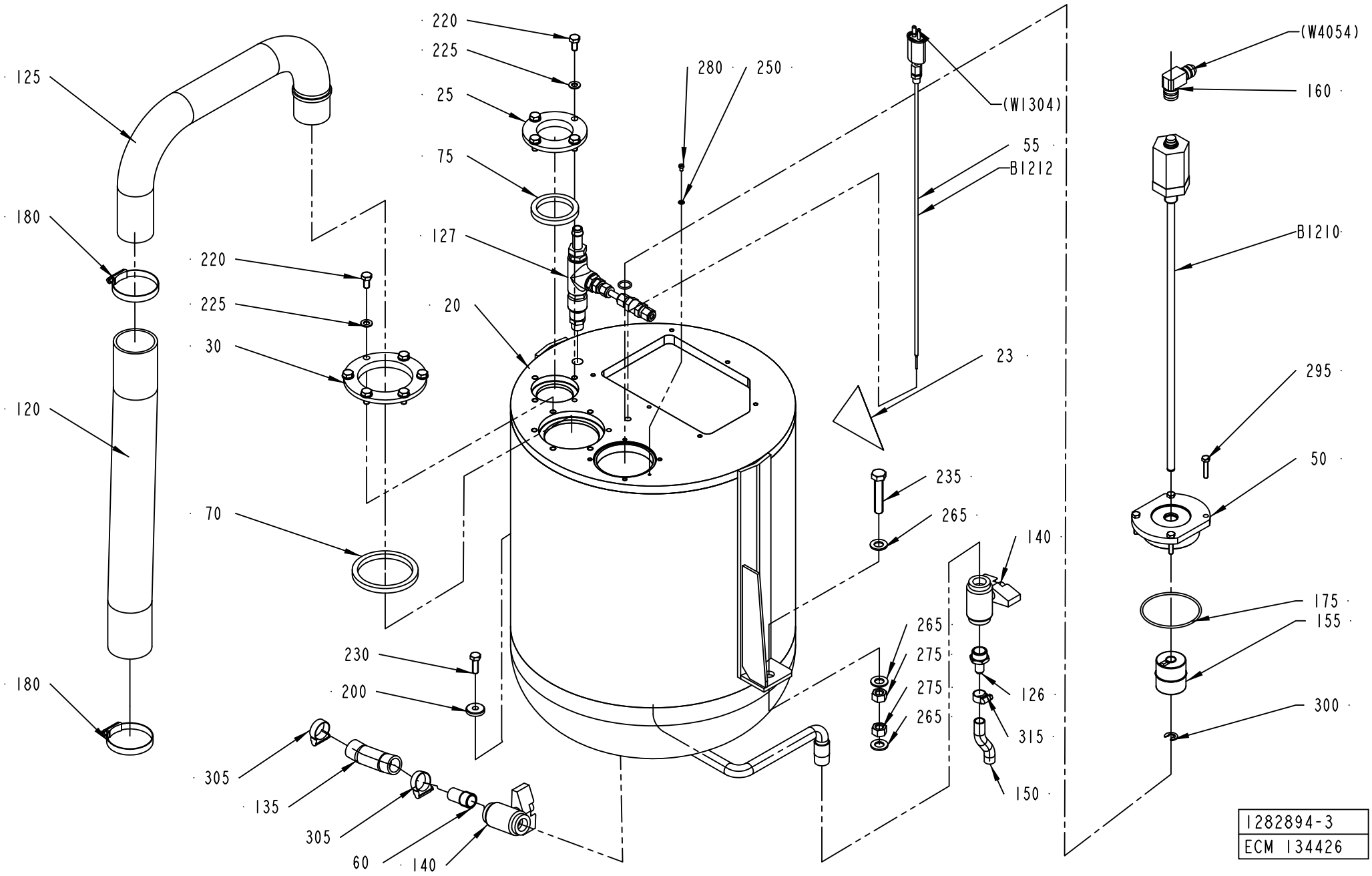
125
180
120
180
220
225
30
70
220
225
25
75
127
20
280
250
(W1304)
55
B1212
23
235
265
140
265
275
275
265
126
315
150
(W4054)
160
B1210
295
50
175
155
300
230
200
305
135
305
60
140
1282894-3
ECM 134426

Pos	Part No	UN	Qty	Description	Page No
A3/FLEX DIMC/FLEX, A3/FLEX TBA 2000S NODIMC, A3/FLEX TBA 1890S NODIMC, A3/FLEX TBA 1400B NODIMC (See drawing on page: 2-18)					
127	2623721-0100		1	PEROXIDE REDUCER	**2-21**
A3/FLEX TBA 0200S NODIMC, A3/FLEX TBA 1000SQ NODIMC, A3/FLEX TBA 1000S NODIMC, A3/FLEX TBA 1000B NODIMC, A3/FLEX TBA 0500B NODIMC, A3/FLEX TPA 1000SQ NODIMC, A3/FLEX TBA 1500S NODIMC, A3/FLEX TBA 0200B NODIMC, A3/FLEX TBA 0250B NODIMC, A3/FLEX TBA 0330S NODIMC, A3/FLEX TPA 0330SQ NODIMC, A3/FLEX TPA 0500SQ NODIMC, A3/FLEX TBA 0250S NODIMC, A3/FLEX TBA 0200M NODIMC, A3/FLEX TBA 0500S NODIMC, A3/FLEX TPA 0200SQ NODIMC, A3/FLEX TPA 0250SQ NODIMC, A3/FLEX TPA 0750SQ NODIMC, A3/FLEX TBA 0200SQ NODIMC, A3/FLEX TBA 0250SQ NODIMC, A3/FLEX TGA 1000SQ NODIMC, A3/FLEX TGA 0500SQ NODIMC, A3/FLEX TGA 0750SQ NODIMC (See drawing on page: 2-16)					
050	1558327-0000		1	LID	
155	90458-2358		1	FLOAT, BTL2-S-4414-4Z	
160	90458-1595		1	CONNECTION, BKS-S 33M-00	
250	315105-0136		1	WASHER BRB 4,3X8 RFR	
300	315755-0110		1	RETAINING RING SHAFT DIN 6799 9 A2	
B1210	90459-0951		1	TRANSDUCER, BTL7-A110-M0400-B-S32	
Common Parts					
020	1255559-0000		1	PEROXIDE TANK	
023	359705-0004		1	WARNING SIGN ISO, DANGEROUS CHEMICALS	
025	1040840-0000		1	FLANGE	
030	1040841-0000		1	FLANGE	
055	1347704-0000		1	THERMOCOUPLE	
	90326-0306		*1*	*GLAND FITTING 9041-45-KS-KR.1/8" D=4,5MM*	
	1040890-0000		*1*	*THERMOCOUPLE*	
060	1037102-0000		1	SPACER PIPE	
070	1040852-0000		1	SEALING RING	
075	1040853-0000		1	SEALING RING	
120	1282899-0000		1	HOSE	
125	1282891-0000		1	PIPE	
126	1282906-0000		1	NIPPLE	
130	90055-0051		1	HOSE NIPPLE, EXT.THR. R3/8X13 MM	
135	90166-0151	MM	140	HOSE	
140	90187-0059		2	BALL VALVE FOR HYDR.PER. G1/2 3MM HOLE	
150	90166-0138	MM	85	HOSE	
175	927422-0016		1	O-RING 79.5X3 SILICONE	
180	342991-0110		2	HOSE CLIP,WORM DRIVE TYPE (54)-63	
200	315125-0165		1	WASHER TBRSB 8,4X26X5 A4	
220	312105-0449		10	SCREW M6S ISO 4017 M8X16 A480	
225	315105-0165		10	WASHER BRB 8,4X16 RFR	
230	312105-0453		1	SCREW M6S ISO 4017 M8X25 A480	
235	312109-0544		1	SCREW M6S ISO 4017 M12X60 A480	
265	315105-0178		3	WASHER BRB 13X24 RFR	
275	312605-0322		2	HEXAGON NUT, M6M M12 A280	
280	312125-0285		1	SCREW ISO 1207 M4X6 A4	
295	312109-0374		4	SCREW M6S ISO 4017 M6X30 A480	
305	342991-0104		2	HOSE CLIP,WORM DRIVE TYPE (23)-27	
315	342991-0101		1	HOSE CLIP,WORM DRIVE TYPE (13)-16	

Machine Type | Group Description | Used-In | Group Number | Page No

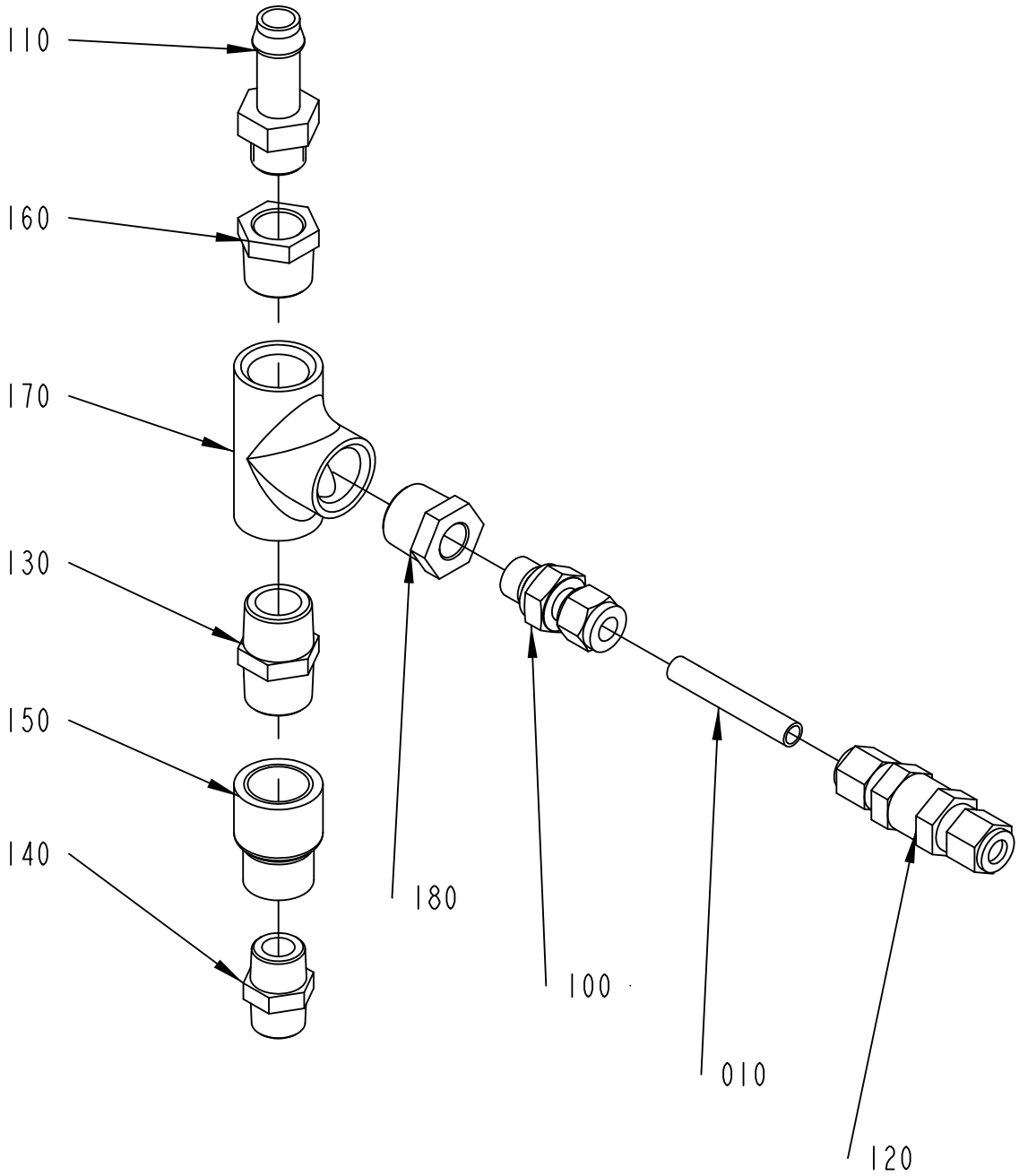

2623721-1
ECM 134426

ECM: 189745 - 20041104
Group number: 2623721-0100
Assembly Drawing: 2623721-1_1_AA

Pos	Part No	UN	Qty	Description	Page No
-					
010	2624539-0000		1	PIPE	
100	90030-0344		1	CONN. STR., 8-G1/4	
110	90055-0051		1	HOSE NIPPLE, EXT.THR. R3/8X13 MM	
120	90230-0032		1	NON-RETURN VALVE, 8MM, L=63,25	
130	90330-0021		1	NIPPLES, EXT. THREAD. R-207R1/2	
140	90330-0028		1	NIPPLES, EXT. THREAD. R-207R3/8	
150	90330-0047		1	SLEEVE, REDUCTION, INT, R-2021/2X3/8	
160	90330-0048		1	BUSHING, INT/EXT. THR. R1/2-RP3/8	
170	90330-0049		1	T-PIPE, INT. THREAD, R-221R1/2	
180	90330-0085		1	BUSHING, INT/EXT. THR. R1/2-RP1/4	

Pos	Part No	UN	Qty	Description	Page No

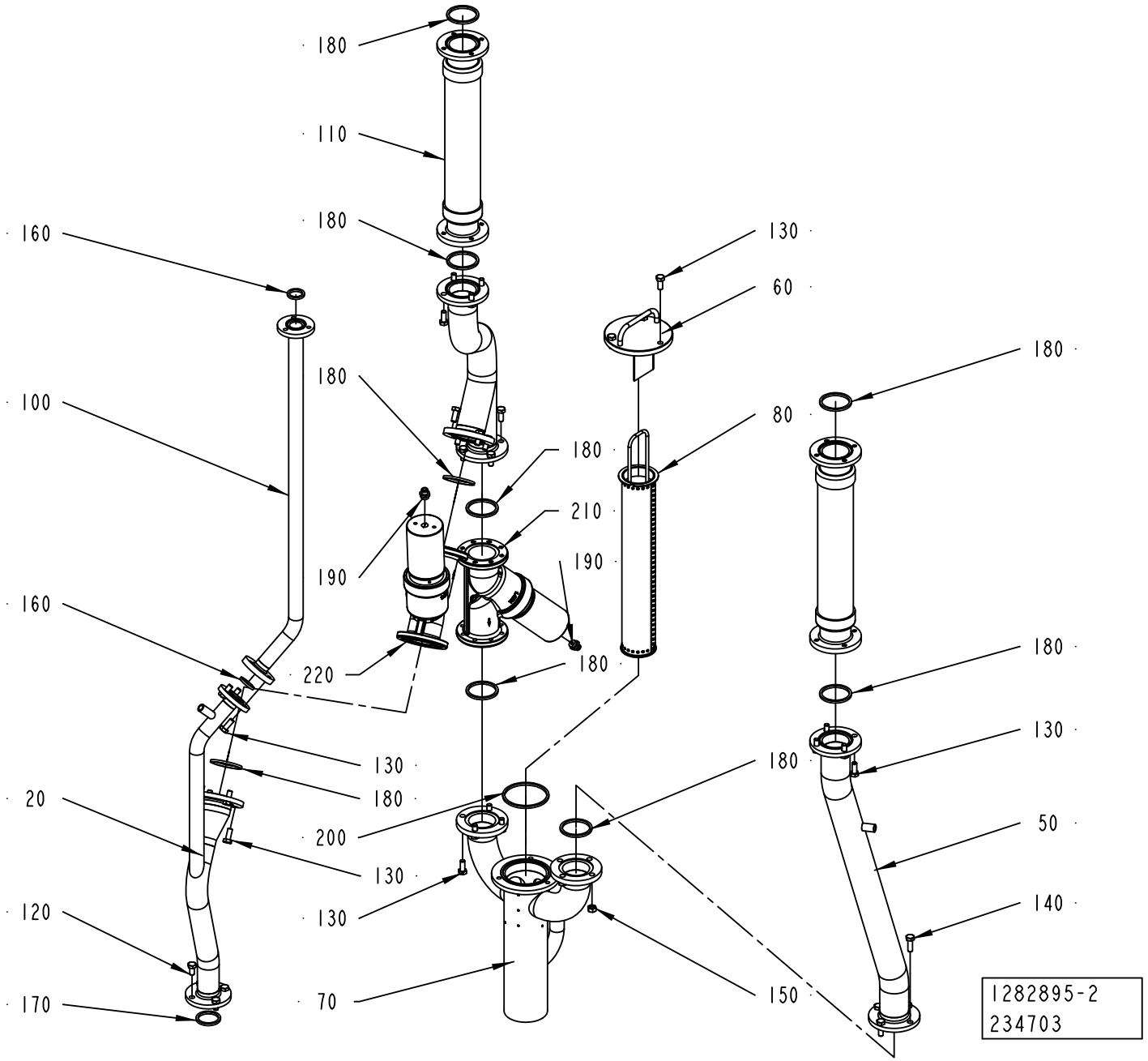
180
110
180
160
130
60
180
100
180
80
180
210
190
190
160
220
180
180
130
180
130
180
20
200
50
130
130
140
120
70
150
170
1282895-2
234703

ECM: 340454 - 20080403
Group number: 1282895-0200
Assembly Drawing: 1282895-2_1_AD

Pos	Part No	UN	Qty	Description	Page No
-					
020	2519554-0000		1	PIPE	
040	1282876-0000		1	PIPE	
050	2519555-0000		1	PIPE	
060	1348530-0000		1	LID	
070	1282879-0000		1	CONNECTING PIPE	
080	1348529-0000		1	STRAINER	
100	1282901-0000		1	PIPE	
110	2598689-0000		2	HOSE	
120	312105-0449		4	SCREW M6S ISO 4017 M8X16 A480	
130	312105-0451		30	SCREW M6S ISO 4017 M8X20 A480	
140	312105-0453		4	SCREW M6S ISO 4017 M8X25 A480	
150	312605-0318		4	HEXAGON NUT, M6M M8 A280	
160	315229-0103		2	GASKETS, 23,1X30,1X3,7 MM 1" FDA	
170	315229-0104		1	GASKETS, 35,8X42,8X3,7 MM 1"1/2 FD	
180	315229-0105		9	GASKETS, 48,5X55,5X3,7 MM 2" FDA	
190	342722-0203		2	STRAIGHT COUPLING	
200	315229-0107		1	GASKETS, 73,9X80,9X3,7 MM 2"1/2 FD	
210	90459-5177		1	ANGLE SEAT VALVE W. FLANGES, N.O.8498668	
220	90459-5178		1	ANGLE SEAT VALVE W. FLANGES, N.O.8498669	

Pos	Part No	UN	Qty	Description	Page No

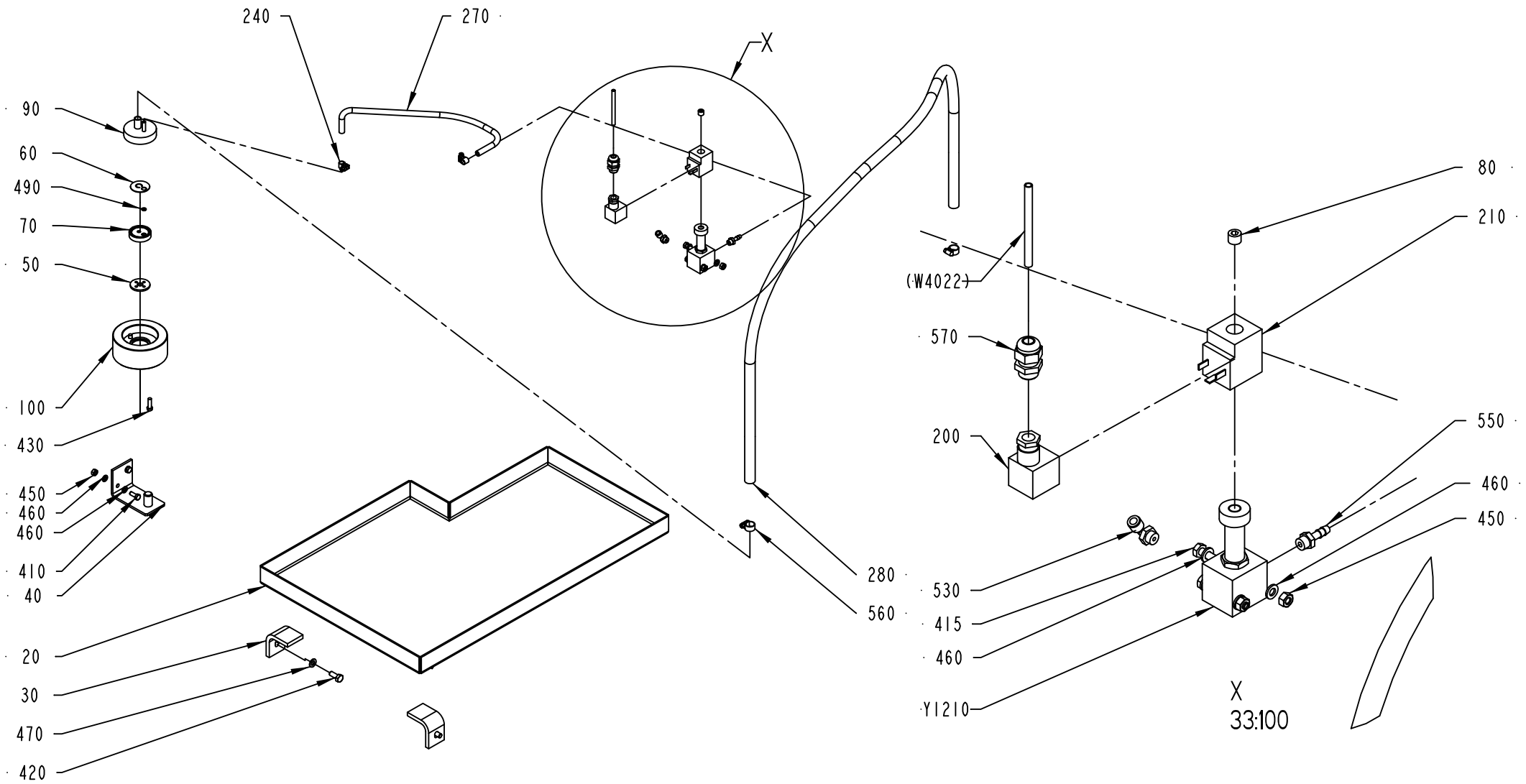

2506637-1
ECM 117202

ECM: 340460 - 20080403
Group number: 2506637-0100
Assembly Drawing: 2506637-1_1_AA

Pos	Part No	UN	Qty	Description	Page No
-					
020	1490950-0000		1	SPLASH PLATE	
030	1037539-0000		2	BRACKET	
040	1317784-0000		1	BRACKET	
050	273981-0000		1	GASKET	
060	527912-0000		1	NON-RETURN VALVE	
070	530551-0000		1	WASHER	
080	563285-0000		1	BLIND PLUG	
090	1129328-0000		1	ATTACHMENT	
100	1317226-0000		1	WEIGHT	
200	90110-0095		1	CONNECTOR 3 POLE + EARTH	
210	90042-0487		1	COIL 24 VDC/15W, 04983 197 18	
240	90132-0021		2	HOSE CLIP 6-10MM	
270	90166-0101	MM	700	HOSE, SILICONE, 60 SHORE, 6/10 MM	
280	90166-0161	MM	1600	HOSE	
410	312105-0368		2	SCREW M6S ISO 4017 M6X16 A480	
415	312105-0379		2	SCREW M6S ISO 4014 M6X45 A480	
420	312105-0451		2	SCREW M6S ISO 4017 M8X20 A480	
430	312125-0370		2	SCREW ISO 1207 M6X20 A4	
450	312605-0316		4	HEXAGON NUT, M6M M6 A280	
460	315105-0153		8	WASHER BRB 6,4X12 RFR	
470	315105-0165		2	WASHER BRB 8,4X16 RFR	
490	315204-0103		1	O-RING 5,1X1,6 MM	
530	90458-2956		1	ELBOW PIPE JOINT, EXT.THREAD, D=6MM-G1/8	
550	342901-0101		1	HOSE NIPPLE, EXT.THR. R1/8-7 MM	
560	342991-0101		2	HOSE CLIP,WORM DRIVE TYPE (13)-16	
570	352103-0101		1	CABLE GLAND, ST 9, PR15,2/PG9	
Y1210	90042-0206		1	SOLENOID VALVE G1/8, 444-111-000-1	

Pos	Part No	UN	Qty	Description	Page No

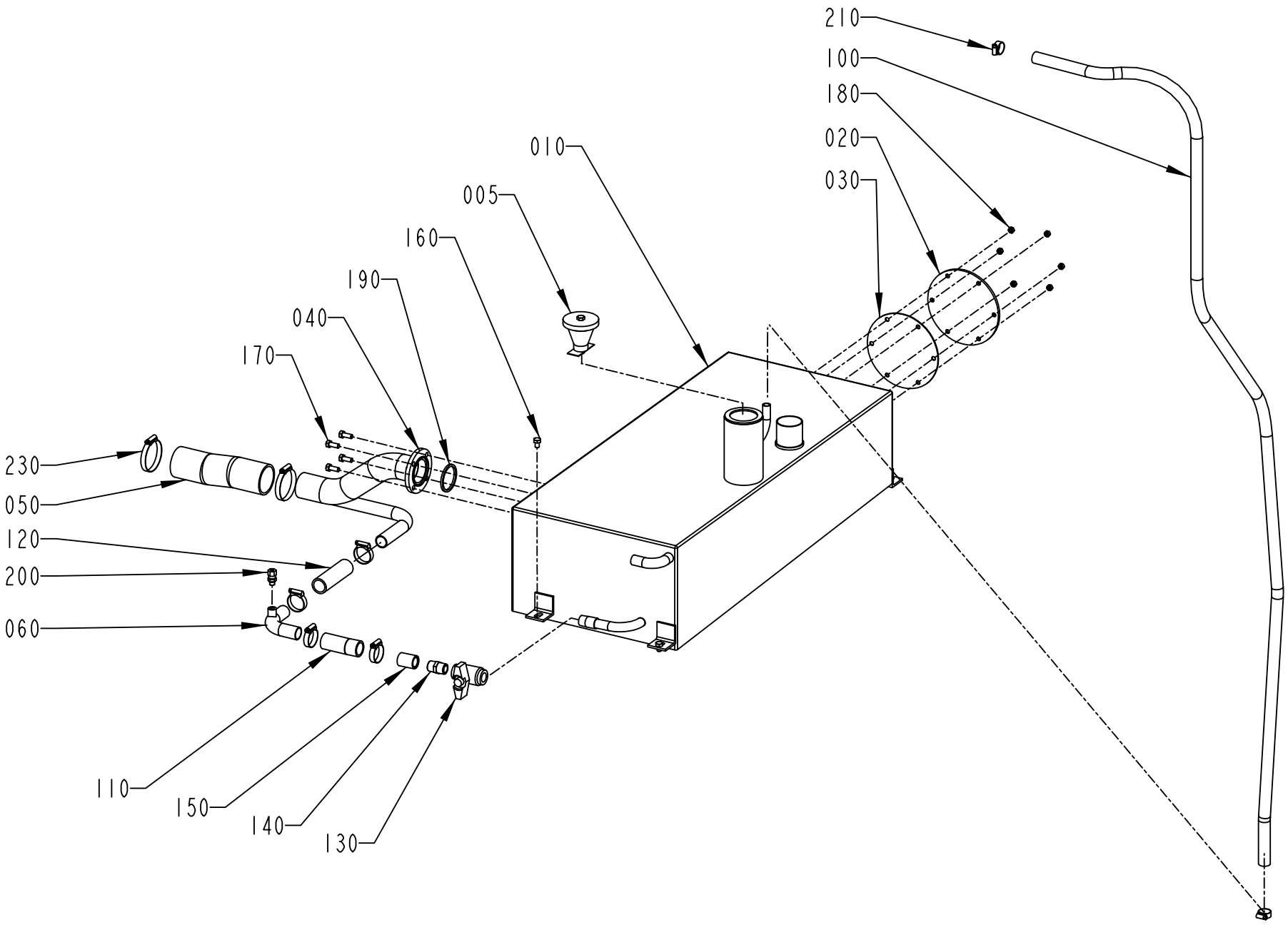

1282896-1
ECM 121676

ECM: 224842 - 20050831
Group number: 1282896-0100
Assembly Drawing: 1282896-1_1_AB

Pos	Part No	UN	Qty	Description	Page No
-					
005	566196-0100		1	LID WITH WEIGHT	**2-29**
010	1282892-0000		1	TANK	
020	1040807-0000		1	LID	
030	1040808-0000		1	GASKET	
040	1282893-0000		1	PIPE	
050	1282898-0000		1	HOSE	
060	2574421-0000		1	PIPE	
100	90166-0087	MM	2500	HOSE 15/23 REINF.PVC TRANSP.	
110	90166-0158	MM	85	HOSE	
120	90166-0158	MM	105	HOSE	
130	90187-0059		1	BALL VALVE FOR HYDR.PER. G1/2 3MM HOLE	
140	90330-0021		1	NIPPLES, EXT. THREAD. R-207R1/2	
150	90330-0054		1	SLEEVE, INT. THREAD, NO. R-201R1/2	
160	312105-0447		4	SCREW M6S ISO 4017 M8X12 A480	
170	312105-0451		4	SCREW M6S ISO 4017 M8X20 A480	
180	312605-0316		6	HEXAGON NUT, M6M M6 A280	
190	315229-0105		1	GASKETS, 48,5X55,5X3,7 MM 2" FDA	
200	90030-0184		1	CONN. STR. GE06LRED71	
210	342991-0103		2	HOSE CLIP,WORM DRIVE TYPE (19)-23	
220	342991-0106		4	HOSE CLIP,WORM DRIVE TYPE (30)-36	
230	342991-0110		2	HOSE CLIP,WORM DRIVE TYPE (54)-63	

Pos	Part No	UN	Qty	Description	Page No

Machine Type | Group Description | Used-In | Group Number | Page No

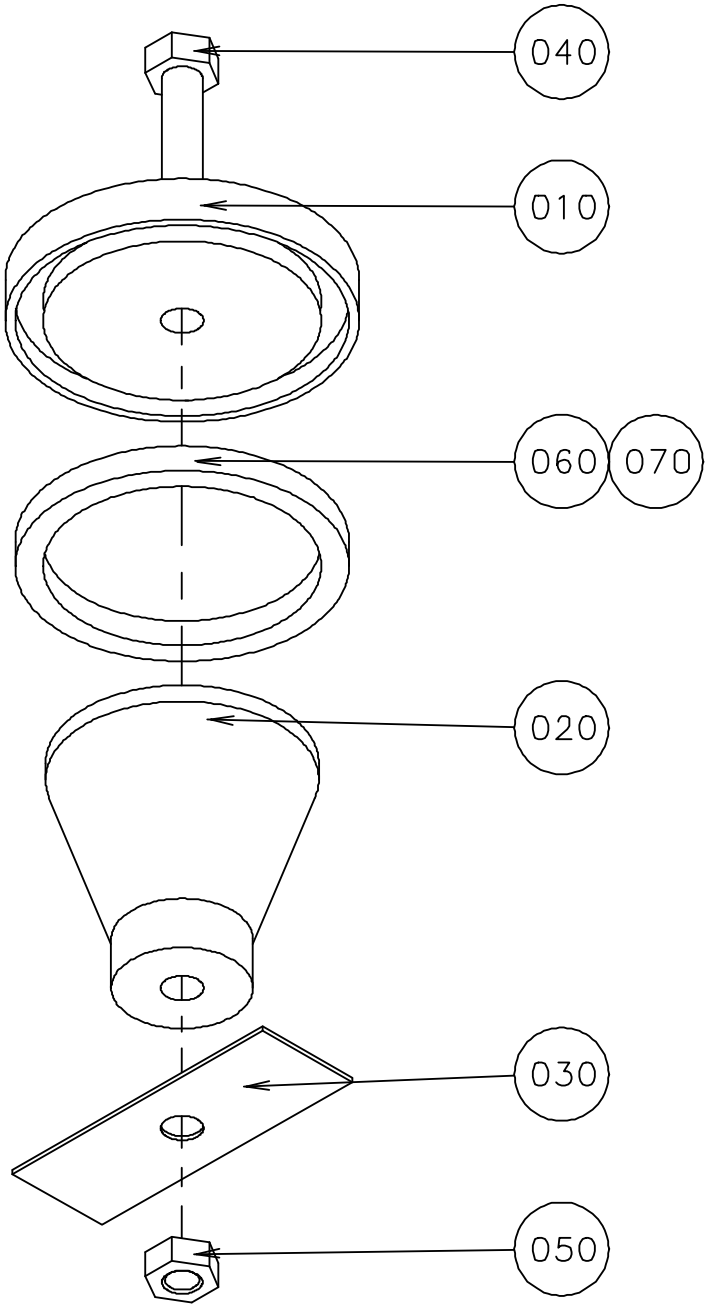

S-566196-1
ECN 70662

ECM: 385019 - 20090128
Group number: 566196-0100
Assembly Drawing: 566196-1_1_AA

Pos	Part No	UN	Qty	Description	Page No
-					
010	566195-0000		1	LID	
020	566194-0000		1	WEIGHT	
030	566171-0000		1	CUP SPRING	
040	312105-0466		1	SCREW M6S ISO 4014 M8X75 A480	
050	312605-0318		1	HEXAGON NUT, M6M M8 A280	
060	90143-0020	MM	190	STRIP	
070	90153-0023		1	ADHESIVE, SILICON 251470 TUB 90CC(UN1993	

Pos	Part No	UN	Qty	Description	Page No

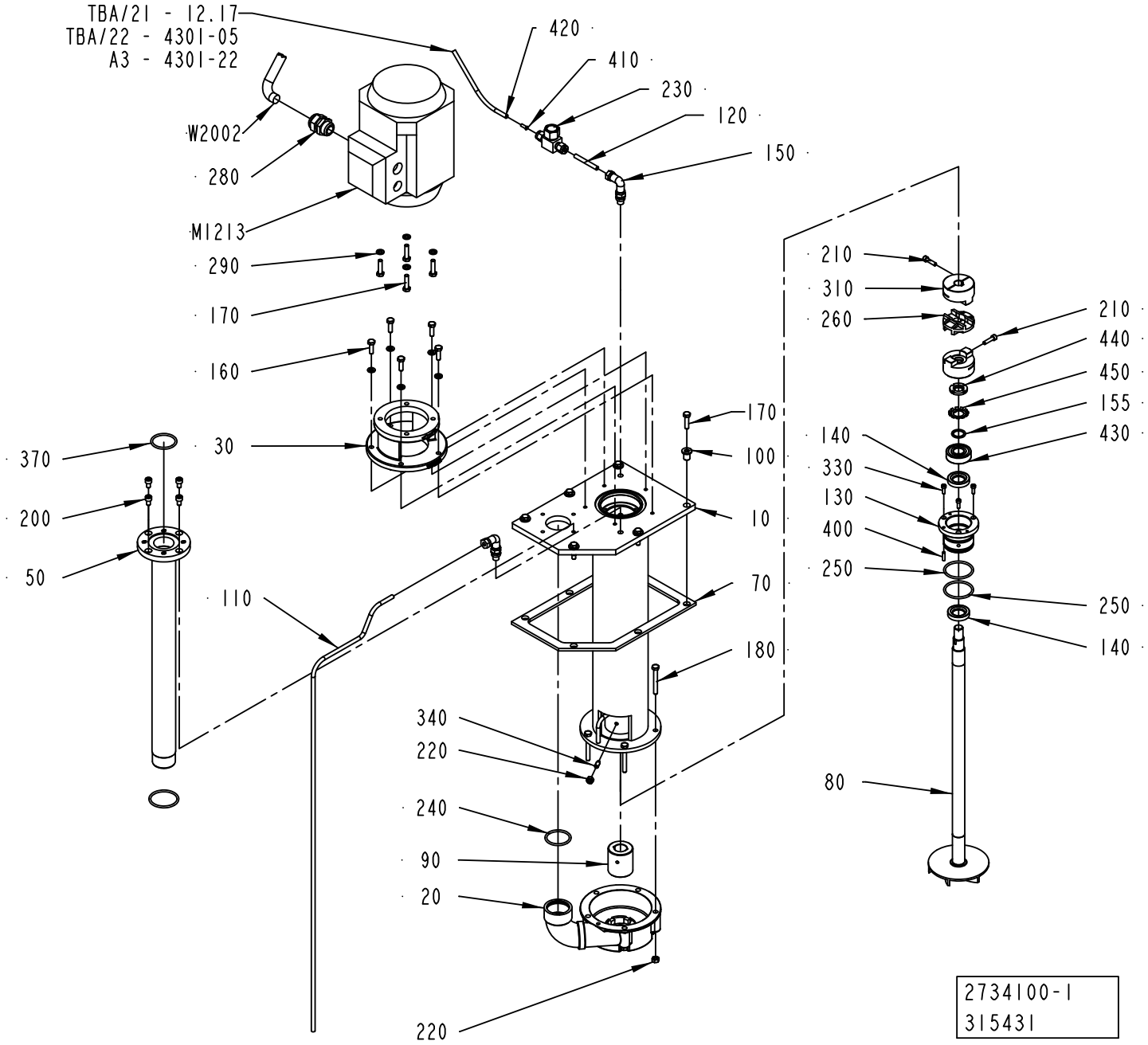
TBA/21 - 12.17
TBA/22 - 4301-05
A3 - 4301-22
420
410
230
120
150
W2002
280
M1213
290
170
160
30
370
200
50
110
170
100
10
70
180
340
220
240
90
20
220
210
310
260
210
440
450
155
430
140
330
130
400
250
250
140
80
2734100-1
315431

ECM: 385018 - 20090128
Group number: 2734100-0100
Assembly Drawing: 2734100-1_1_AA

Pos	Part No	UN	Qty	Description	Page No
-					
010	2734101-0000		1	EXTENSION PIPE	
020	2529412-0000		1	PUMP HOUSING	
030	751395-0000		1	FLANGE	
050	1040796-0000		1	PIPE	
070	1255557-0000		1	GASKET	
080	2931192-0000		1	IMPELLER WHEEL	
090	2734102-0000		1	BUSHING	
100	2564342-0000		6	SPACER	
110	2564561-0000		1	PIPE	
120	2564978-0000		1	PIPE	
130	2734104-0000		1	BUSHING	
140	90091-0412		2	SEAL RING	
150	90030-0171		2	ADJUSTABLE ELBOW CONNECTION, EVW06LR71	
155	2744234-0000		1	SPACER	
160	312105-0370		5	SCREW M6S ISO 4017 M6X20 A480	
170	312105-0372		10	SCREW M6S ISO 4017 M6X25 A480	
180	312109-0380		5	SCREW M6S ISO 4017 M6X50 A480	
200	312115-0364		4	SCREW ISO4762 M6X10 A4 80	
210	312115-0331		2	SCREW ISO4762 M5X20 A4 80	
220	312605-0316		7	HEXAGON NUT, M6M M6 A280	
230	90230-0064		1	CHECK VALVE, 6 MM HIGH TEMP.	
240	927422-0005		1	O-RING 36.2X3 SILICONE	
250	927422-0006		3	O-RING 42.2X3 SILICONE	
260	90458-0274		1	DISC FOR COUPLING, HUCO 236.50T	
280	352103-0110		1	CABLE GLAND, STR 16, PR22,5/PG16	
290	315105-0153		9	WASHER BRB 6,4X12 RFR	
310	90459-1536		2	FLEXIBLE COUPLING DISC, 14 MM	
330	312115-0291		3	SCREW ISO4762 M4X12 A4 80	
340	90287-0159		2	SCREW, SOCK.SET DOGPOINT M6X16	
370	315204-0222		1	O-RING 36,2X3 MM	
400	311103-0270		1	PARALLEL PIN ISO 2338 4M6X16 A1	
410	342706-0130		1	ACCESSORIES, INSERT SLEEVE 6 MM	
420	90166-0132	M	1	TUBE 6 MM PA,TRANSP.	
430	321313-0103		1	BALL BEARING, 17X40X12MM	
440	312805-0103		1	NUT ROUND WITH SLOTS M17X1 FE	
450	315410-0103		1	LOCK WASHER MB 3 D=17 H=1	
M1213	90458-2466		1	MOTOR 3GVA071002-CSC-M2VA71B2	
W2002	351150-0418	M	1	CABLE OLFLEX 4X2,5 MM2 LIGHT/GREY	

Pos	Part No	UN	Qty	Description	Page No

Machine Type | Group Description | Used-In | Group Number | Page No

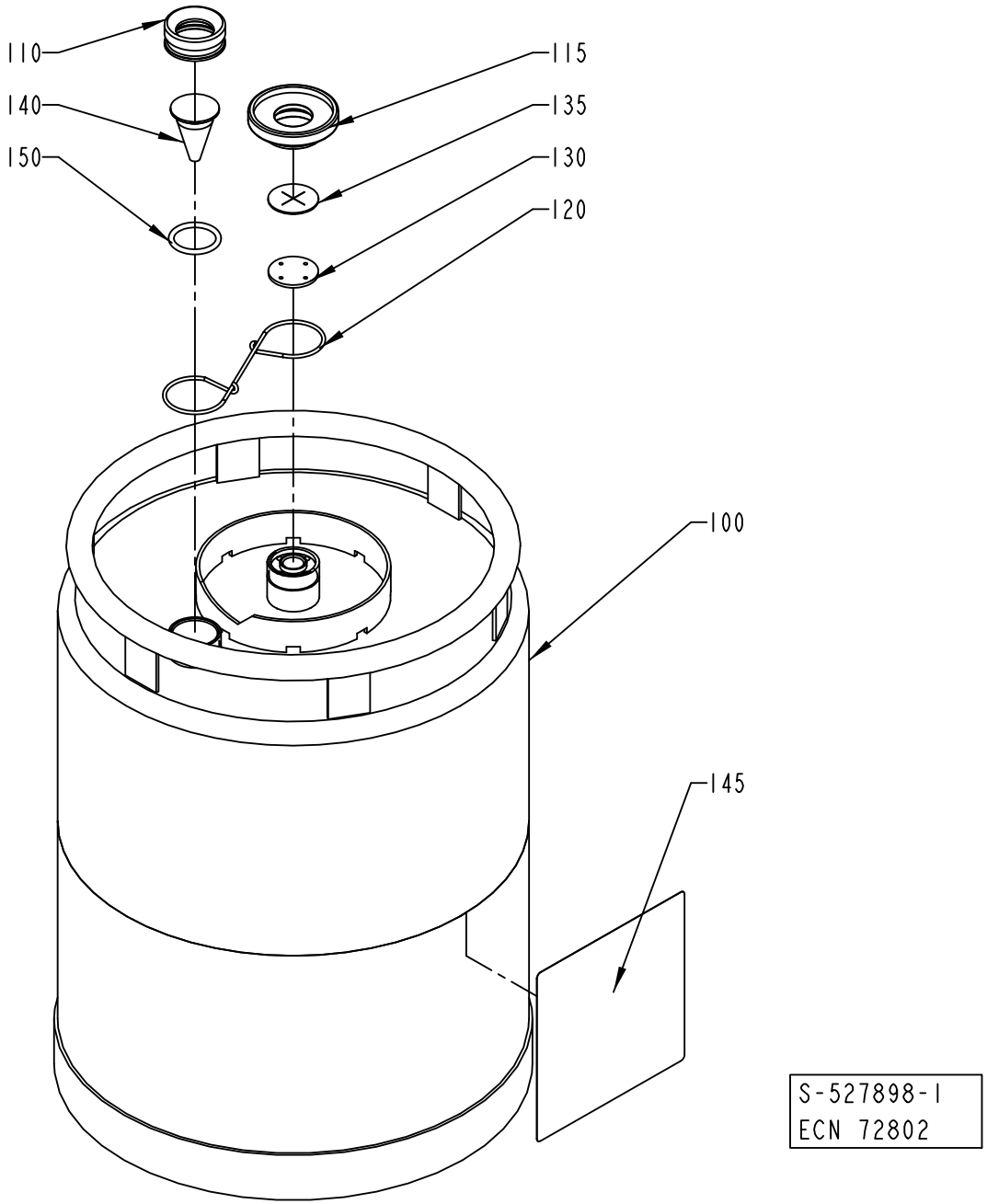
110
140
150
115
135
130
120
100
145
S-527898-1
ECN 72802

ECM: 224840 - 20050831
Group number: 527898-0100
Assembly Drawing: 527898-1_1_AB

Pos	Part No	UN	Qty	Description	Page No
-					
100	561427-0000		1	CONTAINER	
110	273977-0000		1	NUT	
115	273996-0000		1	NUT	
120	273980-0000		1	SPRING	
130	565250-0000		1	WASHER	
135	565251-0000		1	VALVE	
140	273978-0000		1	LEVEL GLAS	
145	532655-0000		1	CAUTION SIGN	
150	927422-0003		1	O.RING 24.2X3 SILICONE	

Pos	Part No	UN	Qty	Description	Page No

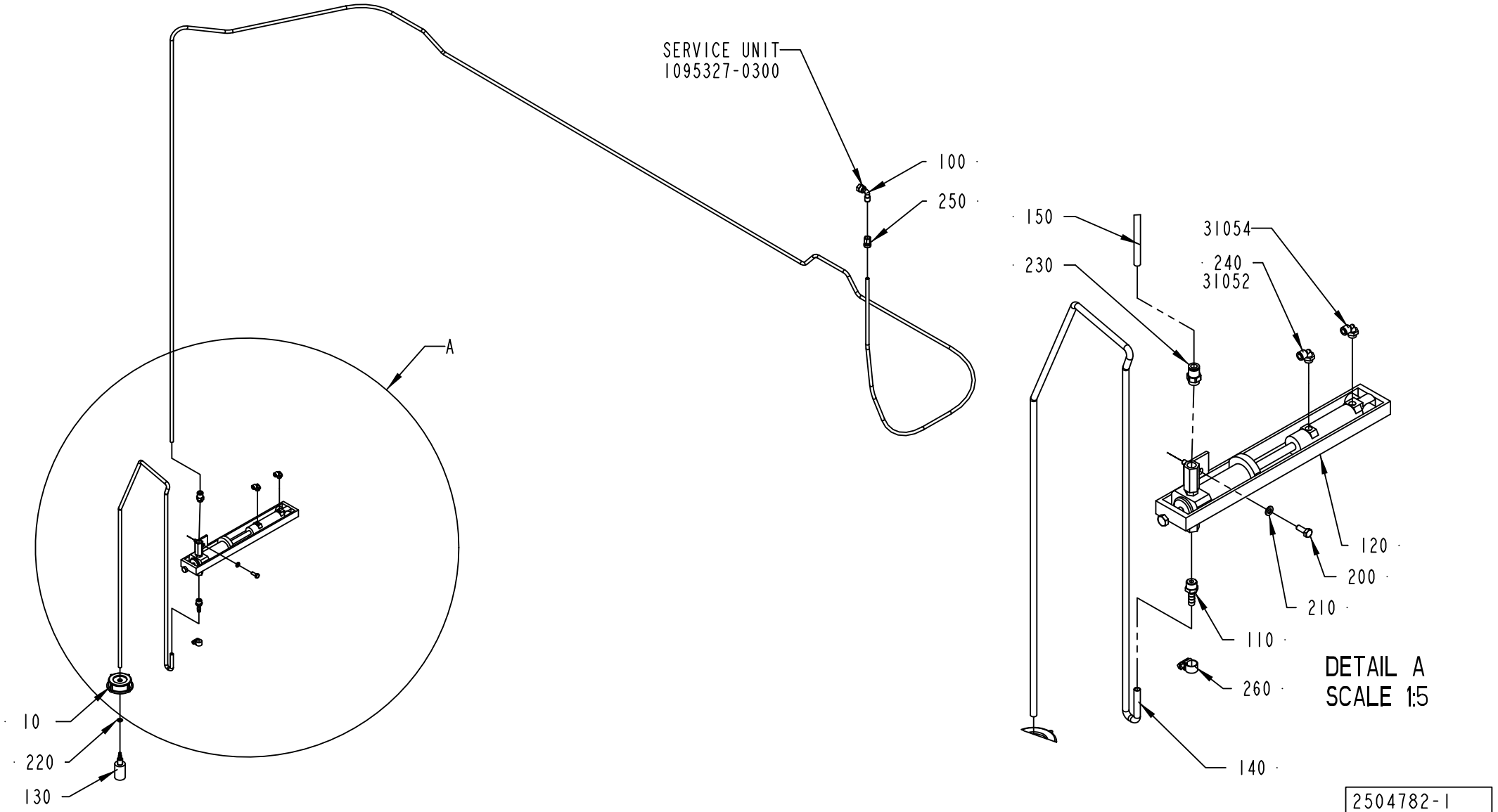
SERVICE UNIT
1095327-0300
100
250
A
10
220
130
150
230
31054
240
31052
120
200
210
110
260
140
DETAIL A
SCALE 1:5
2504782-1
184089

ECM: 192977 - 20050620
Group number: 2504782-0100
Assembly Drawing: 2504782-1_1_AB

Pos	Part No	UN	Qty	Description	Page No
-					
010	1129432-0000		1	LID	
100	90030-0071		1	CONN. ELBOW WE08LR71	
110	90055-0132		1	HOSE NIPPLE, EXT.THR. R1/4X7,8 MM	
120	90321-0128		1	CHEM. PUMP 081778	
130	90415-0052		1	FILTER ART NO 12565 C-340-6E FOTVENTI EP	
140	90166-0008	MM	1500	HOSE 7/10 PVC TRANSP.	
150	90166-0118	MM	5300	TUBE 8 MM PA BLACK	
200	312105-0368		2	SCREW M6S ISO 4017 M6X16 A480	
210	315101-0153		2	WASHER PLAIN, BRB, 6,4/12 H=1,5	
220	315204-0207		1	O-RING 8,3X2,4 MM	
230	342722-0205		1	STRAIGHT COUPLING D=8-G1/4"	
240	90458-2956		2	ELBOW PIPE JOINT, EXT.THREAD, D=6MM-G1/8	
250	342923-0122		1	STRAIGHT COUPL.,INT.THREADED 8/6-G1/4"	
260	342991-0100		1	HOSE CLIP,WORM DRIVE TYPE 10-13	

Pos	Part No	UN	Qty	Description	Page No

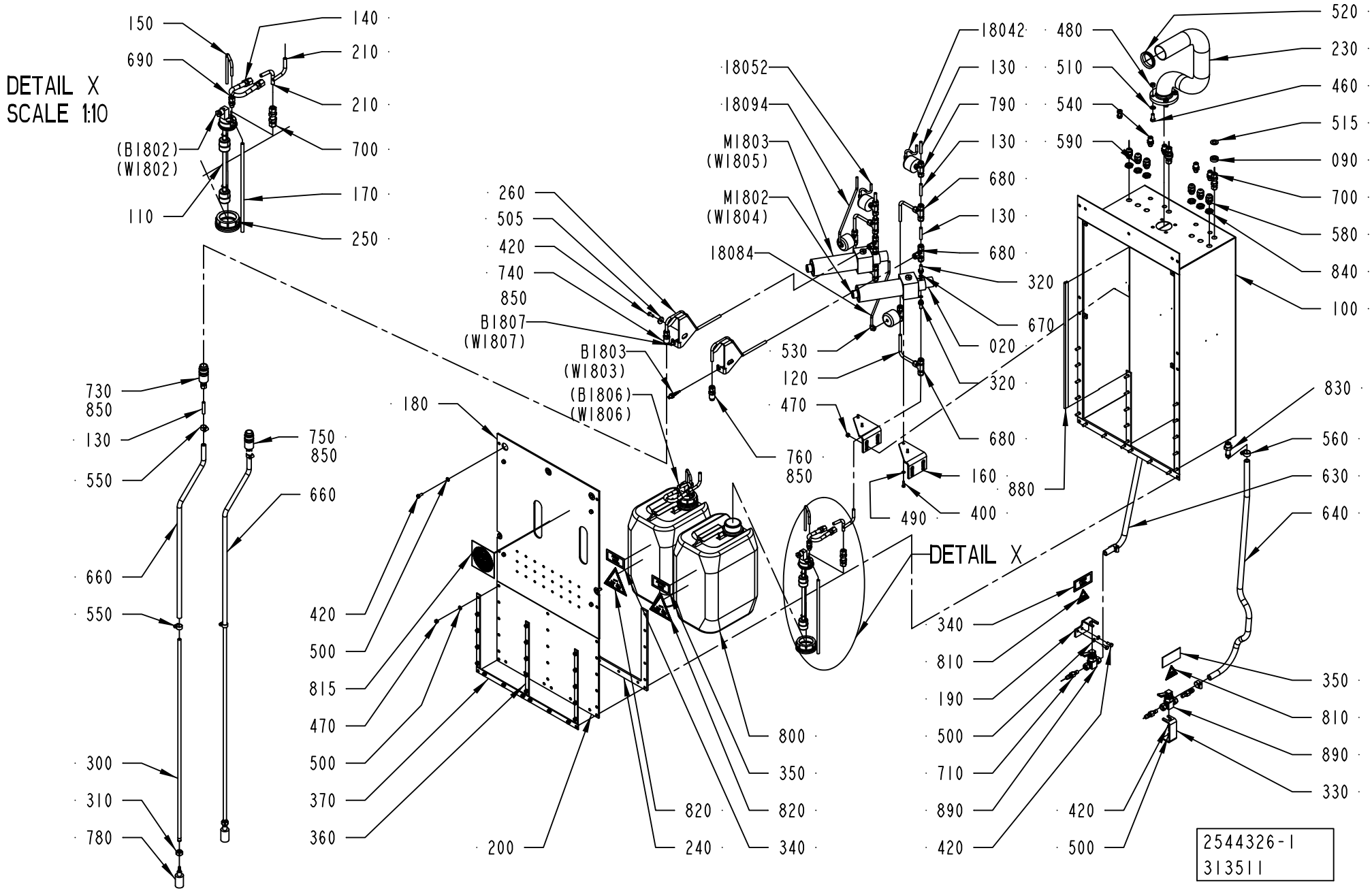
DETAIL X
SCALE 1:10
150
690
(B1802)
(W1802)
110
140
210
210
700
170
250
260
505
420
740
850
B1807
(W1807)
B1803
(W1803)
(B1806)
(W1806)
180
730
850
130
550
660
550
300
310
780
750
850
660
420
500
815
470
500
370
360
200
820
240
800
350
820
340
18052
18094
M1803
(W1805)
M1802
(W1804)
18084
530
120
470
760
850
18042
130
790
130
680
130
680
320
670
020
320
680
160
400
490
480
510
540
590
520
230
460
515
090
700
580
840
100
830
560
630
640
880
DETAIL X
340
810
190
500
710
890
420
350
810
890
330
420
500
2544326-1
313511

ECM: 313511 - 20080402
Group number: 2544326-0100
Assembly Drawing: 2544326-1_1_AF

Pos	Part No	UN	Qty	Description	Page No
-					
020	927244-0100		2	PUMP	**2-39**
090	2603387-0000		2	SPACER	
100	2544311-0000		1	BOX	
110	2544312-0000		2	FLOAT	
120	2544313-0000		4	PIPE	
130	2544314-0000		8	PIPE	
140	2559977-0000		2	HOSE	
150	2544316-0000		2	PIPE	
160	2559976-0000		2	BRACKET	
170	2544318-0000		2	PIPE	
180	2544319-0000		1	COVER	
18042	90166-0081	MM	150	TUBE 6 MM PA BLUE	
18052	90166-0081	MM	150	TUBE 6 MM PA BLUE	
18084	90166-0081	MM	300	TUBE 6 MM PA BLUE	
18094	90166-0081	MM	300	TUBE 6 MM PA BLUE	
190	2608104-0000		1	BRACKET	
200	2544321-0000		1	COVER	
210	2559978-0000		4	PIPE	
230	2544324-0000		1	PIPE	
240	2544325-0000		1	GASKET	
250	2544330-0000		2	PLUG	
260	2558826-0000		2	PIPE	
300	927262-0000		2	PIPE	
310	928025-0000		2	PLUG	
320	2559461-0000		4	SPACER	
330	2608103-0000		1	BRACKET	
340	2566211-0000		2	LABEL	
350	2566212-0000		2	LABEL	
360	2566209-0000		3	PLATE	
370	2566210-0000		1	PLATE	
400	312105-0329		4	SCREW M6S ISO 4017 M5X16 A480	
420	312105-0368		14	SCREW M6S ISO 4017 M6X16 A480	
460	312105-0451		4	SCREW M6S ISO 4017 M8X20 A480	
470	312605-0316		25	HEXAGON NUT, M6M M6 A280	
480	312605-0318		4	HEXAGON NUT, M6M M8 A280	
490	315105-0146		4	WASHER BRB 5,3X10 RFR	
500	315105-0153		33	WASHER BRB 6,4X12 RFR	
505	315125-0153		2	WASHER TBRSB 6,4X22X4 A4	
510	315105-0165		4	WASHER BRB 8,4X16 RFR	
515	315105-0178		2	WASHER BRB 13X24 RFR	
520	315220-0198		1	V-RINGS 45X55X13 MM V-50S	
530	90458-2956		4	ELBOW PIPE JOINT, EXT.THREAD, D=6MM-G1/8	
540	342768-0102		4	BULKHEAD CONNECTOR, 6 MM	
550	342991-0101		4	HOSE CLIP,WORM DRIVE TYPE (13)-16	
560	342991-0102		4	HOSE CLIP,WORM DRIVE TYPE (16)-19	
580	352103-0101		4	CABLE GLAND, ST 9, PR15,2/PG9	
590	352103-0100		2	CABLE GLAND, STR 9, PR15,2/PG9	
630	90166-0198	MM	700	RUBBER HOSE	
640	90166-0198	MM	950	RUBBER HOSE	
650	90166-0225	MM	680	HOSE	
660	90166-0225	MM	680	HOSE	
670	315206-0506		4	O-RING 7,65X1,78 MM	
680	90459-1425		6	CONN. T-PIPE 8	
690	90459-1424		2	CONN. STR., 6-G1/8, EXT. THREAD	
700	90030-0485		4	CONN. BULKHEAD SV 8-	
710	90459-2615		4	HOSE NIPPLE SS-6-HC-A-601	
730	90163-0172		1	QUICK-RELEASE COUPLING SS-QTM2A-B-8M0-K4	
740	90459-1430		1	QUICK-RELEASE COUPLING, SS-QTM2-D-8M0-K4	
750	90163-0141		1	QUICK-RELEASE COUPLING SS-QTM2A-B-8M0-K2	
760	90459-1427		1	QUICK-RELEASE COUPLING, SS-QTM2-D-8M0-K2	
780	90415-0052		2	FILTER ART NO 12565 C-340-6E FOTVENTI EP	
790	90458-2333		4	VALVE, M8A-V4LQ-KZ-11AO-SS PNEUM. OPER.	
800	90459-0462		2	CANISTER LY 500-10	
810	359705-0003		2	WARNING SIGN ISO, DANGEROUS CHEMICALS	
815	359605-0002		1	MANDATORY SIGN ISO, EYE PROTECTION	
820	359705-0004		2	WARNING SIGN ISO, DANGEROUS CHEMICALS	
830	90055-0051		2	HOSE NIPPLE, EXT.THR. R3/8X13 MM	
840	90099-0104		6	NUT, PR 15,2 (PG9)	
850	90144-0073		1	TREBOFLON-TAPE W=13MM	
880	90143-0097	MM	495	SELF GRIPPING GASKET, 1011-24	
890	90459-2609		2	BALL VALVE 3/8", 6A-V6LQ-SI-SSP-ALH	
B1803	90600-0473		1	INDUCTIVE SWITCH E2A-S08KS01-WP-B1-TP 5M	
B1807	90600-0473		1	INDUCTIVE SWITCH E2A-S08KS01-WP-B1-TP 5M	

Machine Type | Group Description | Used-In | Group Number | Page No

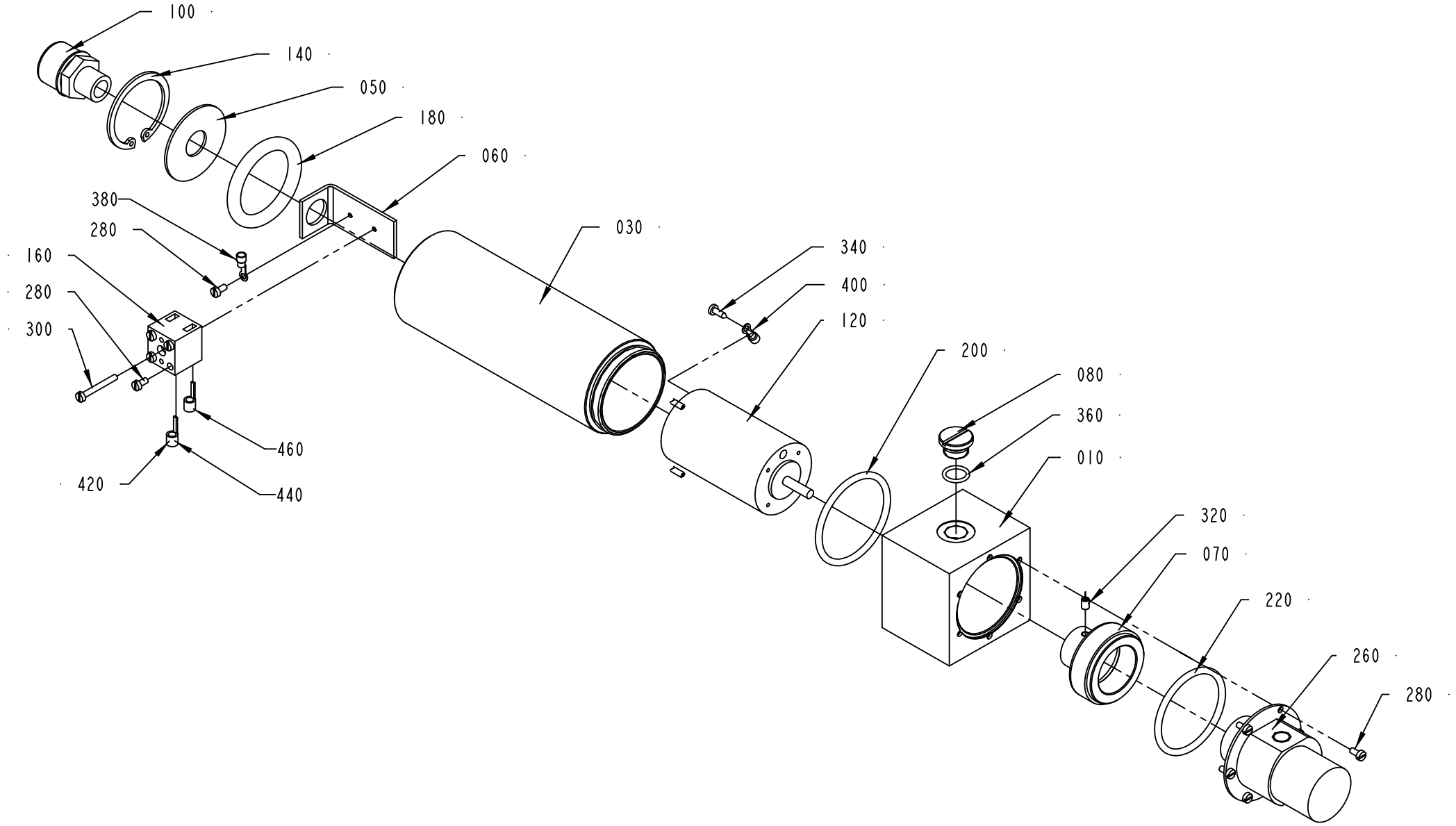

927244-1
ECN 313511

ECM: 339752 - 20080402
Group number: 927244-0100
Assembly Drawing: 927244-1_1_AB

Pos	Part No	UN	Qty	Description	Page No
-					
010	927339-0000		1	ADAPTER	
030	927342-0000		1	CYLINDER	
050	927340-0000		1	DISC	
060	927341-0000		1	HOLDER	
070	927362-0000		1	MAGNET	
080	927363-0000		1	PLUG	
100	90012-0063		1	CABLE GLAND PR 15,2	
120	90045-0162		1	MOTOR 4G42X25	
140	90141-0020		1	RETAINING RING FOR BORE DIN 472 42 A2	
160	90195-0020		1	TERMINAL BLOCK, BK 2CRN; 0624720000	
180	90242-0222		1	O-RING 45,36X3,53 MM	
200	90242-0223		1	O-RING 47,35X1,78 MM	
220	90242-0224		1	O-RING 44,17X1,78 MM	
260	90321-0102		1	PUMP, 4MG209XTS37	
280	312125-0220		11	SCREW ISO 1207 M3X6 A4	
300	312125-0232		1	SCREW ISO 1207 M3X25 A4	
320	312318-0285		1	SCREW ISO4029 M4X6 A4	
340	312503-0225		1	TAPPING SCREW ISO 7049-ST2,9X9,5-C-Z	
360	315202-0701		1	O-RING 10,82X1,78 MM	
380	351162-0102	MM	300	WIRE AWM 1X0,75 MM2 YELLOW-GREEN	
400	353101-0118		2	CABLE SHOE 0,5-1,5MM2 M3 RED	
420	353105-0117		2	PIN CABLE SHOE 0,75-1,5MM2 RED A1519SR	
440	359000-0101		1	WIRE MARKING, YELLOW, PY01/3"1"	
460	359000-0102		1	WIRE MARKING, YELLOW, PY01/3"2"	

Pos	Part No	UN	Qty	Description	Page No

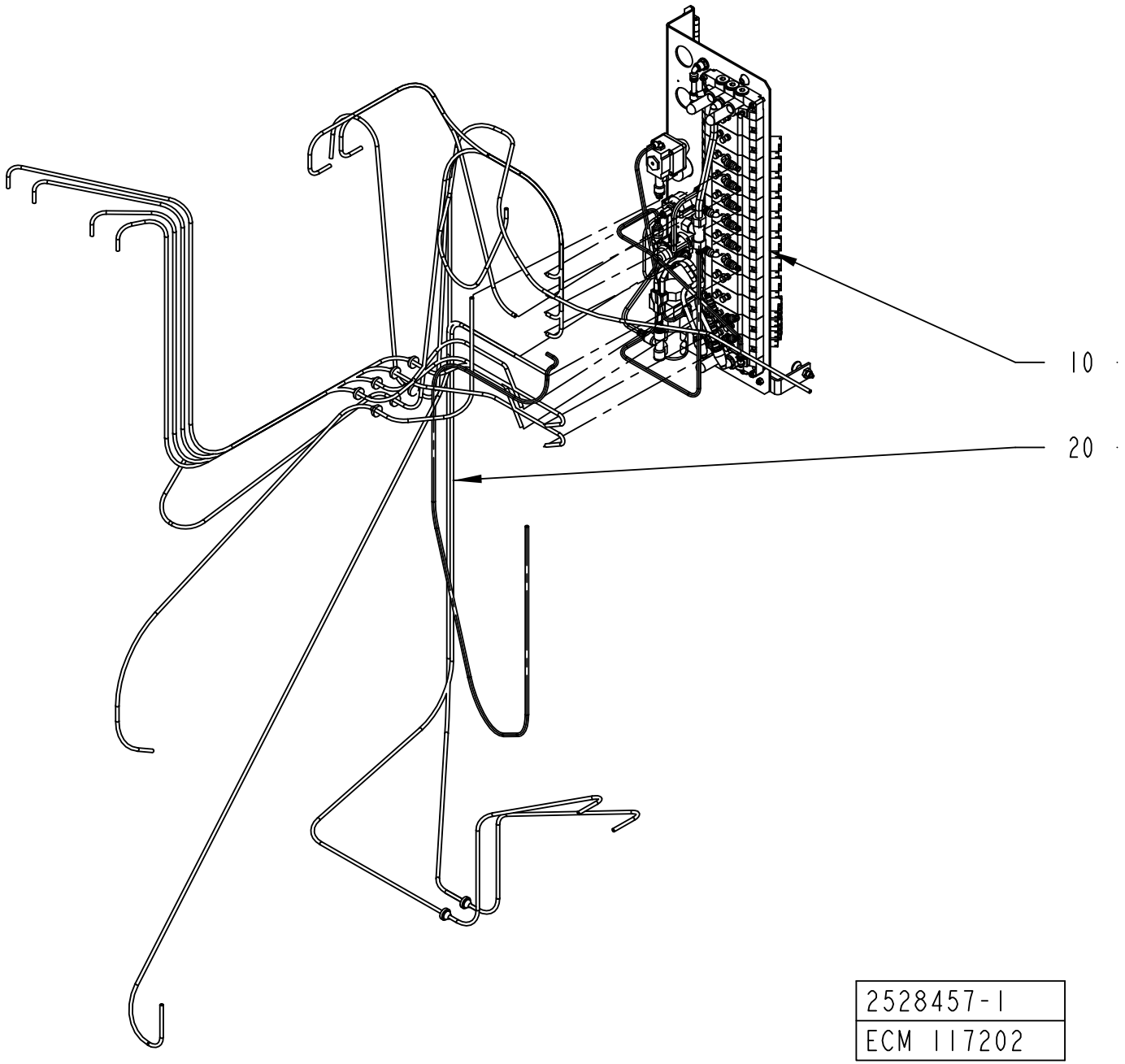
10
20
2528457-1
ECM 117202

ECM: 117202 - 20030403
Group number: 2528457-0100
Assembly Drawing: 2528457-1_1_AA

Pos	Part No	UN	Qty	Description	Page No
A3/FLEX					
020	2552931-0100		1	HOSE INSTALLATION	**2-43, 2-45**
Common Parts					
010	2506359-0100		1	VALVE PANEL	**2-47**

Pos	Part No	UN	Qty	Description	Page No

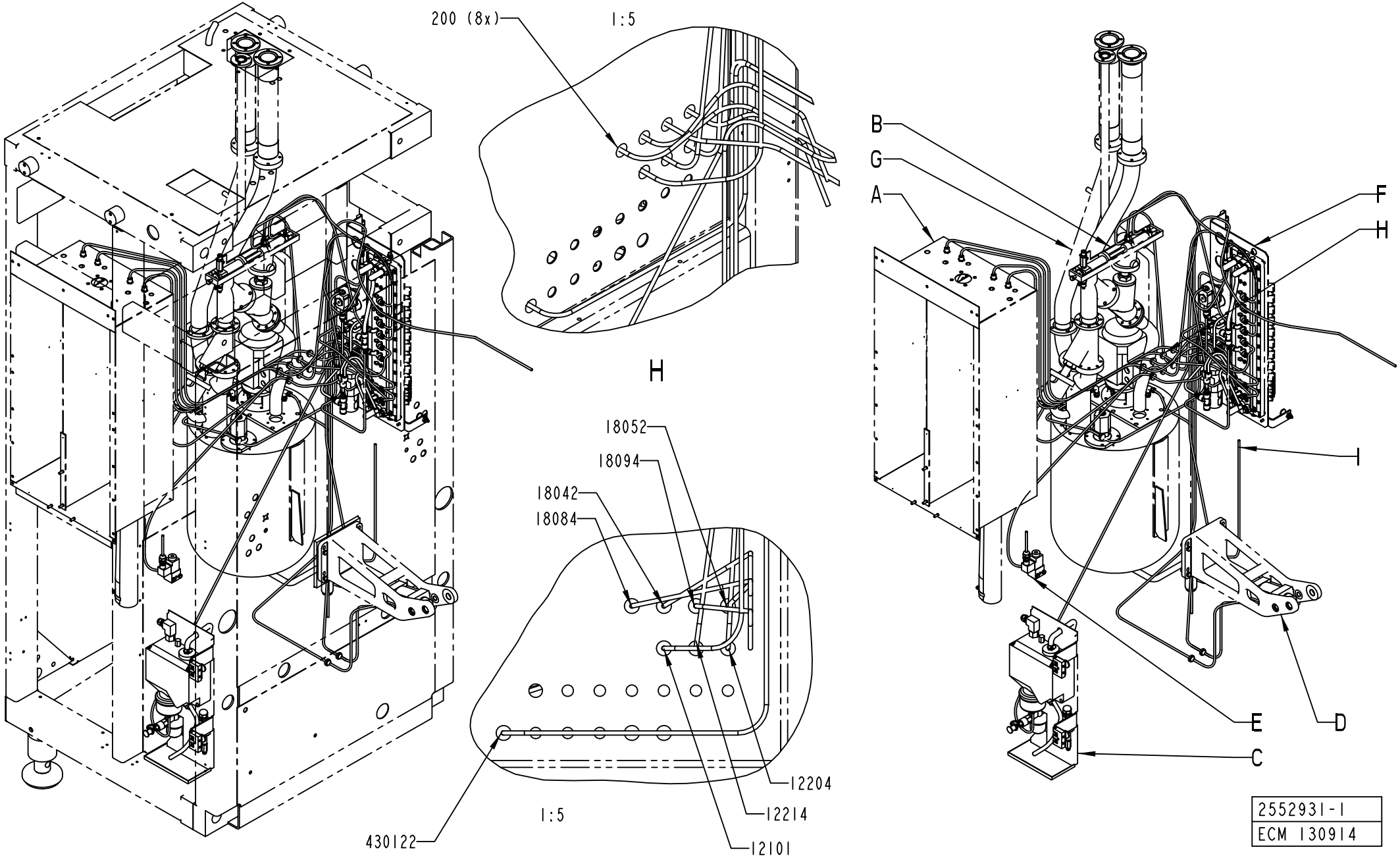
200 (8x)
1:5
H
18052
18094
18042
18084
12204
12214
12101
1:5
430122
B
G
A
F
H
I
E
D
C
2552931-1
ECM 130914

ECM: 189753 - 20041104
Group number: 2552931-0100
Assembly Drawing: 2552931-1_1_AB

This list covers pages from 2-42 to 2-45

Pos	Part No	UN	Qty	Description	Page No
-					
12101	90166-0081	MM	1750	TUBE 6 MM PA BLUE	
12204	90166-0081	MM	2070	TUBE 6 MM PA BLUE	
12214	90166-0081	MM	2010	TUBE 6 MM PA BLUE	
18042	90166-0081	MM	2070	TUBE 6 MM PA BLUE	
18052	90166-0081	MM	2000	TUBE 6 MM PA BLUE	
18084	90166-0081	MM	2210	TUBE 6 MM PA BLUE	
18094	90166-0081	MM	2120	TUBE 6 MM PA BLUE	
200	90015-0020		10	LEAD-IN, TET5-7, E-1458016	
21044	90166-0081	MM	2040	TUBE 6 MM PA BLUE	
24014	90166-0081	MM	2760	TUBE 6 MM PA BLUE	
31052	90166-0081	MM	1230	TUBE 6 MM PA BLUE	
31054	90166-0081	MM	1310	TUBE 6 MM PA BLUE	
43012	90166-0081	MM	1800	TUBE 6 MM PA BLUE	
430122	90166-0081	MM	1800	TUBE 6 MM PA BLUE	
55012	90166-0081	MM	2490	TUBE 6 MM PA BLUE	
55014	90166-0081	MM	2700	TUBE 6 MM PA BLUE	

Pos	Part No	UN	Qty	Description	Page No

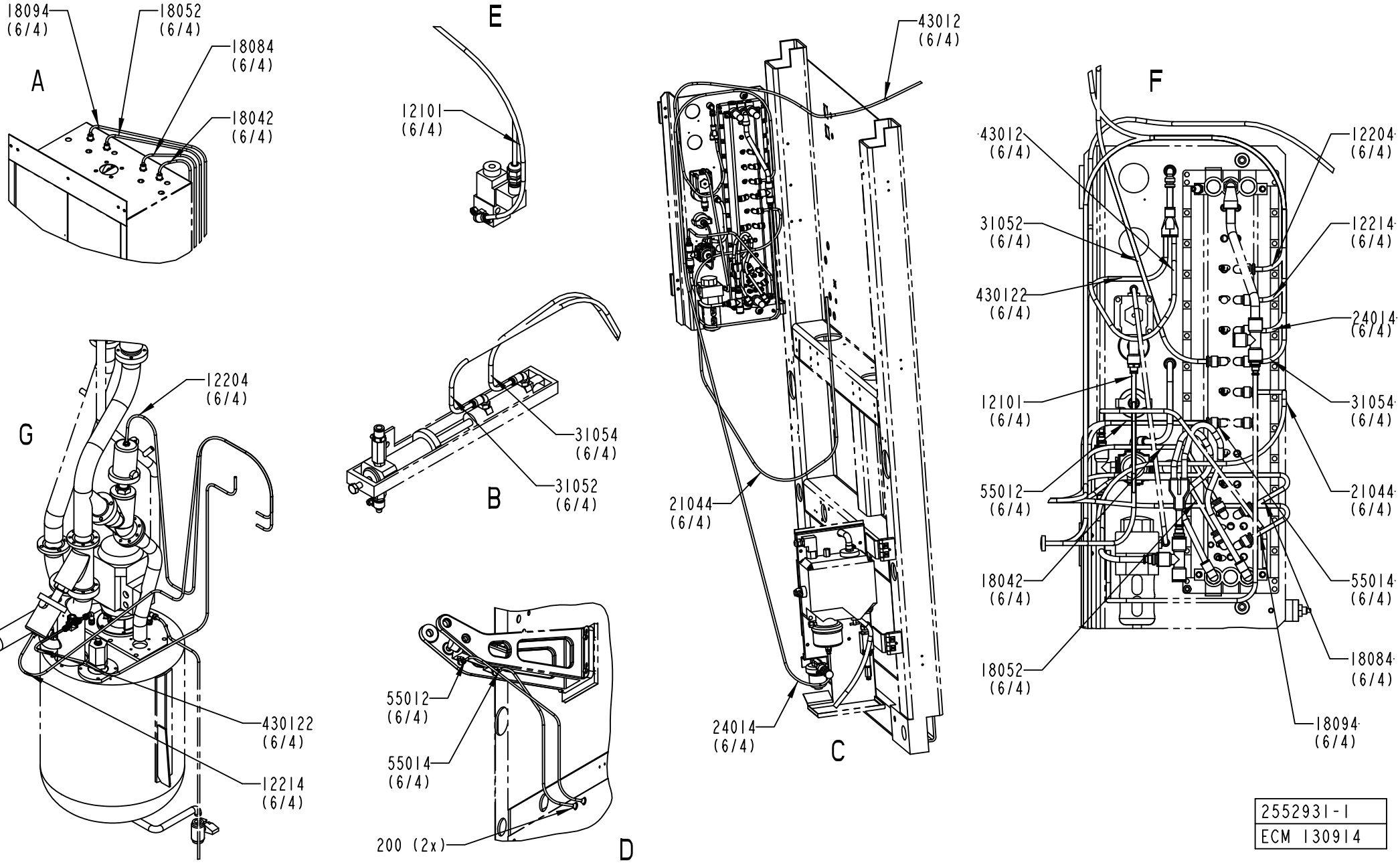
18094
(6/4)
18052
(6/4)
18084
(6/4)
18042
(6/4)
A
E
12101
(6/4)
43012
(6/4)
F
43012
(6/4)
12204
(6/4)
31052
(6/4)
12214
(6/4)
430122
(6/4)
24014
(6/4)
12101
(6/4)
31054
(6/4)
55012
(6/4)
21044
(6/4)
18042
(6/4)
55014
(6/4)
18052
(6/4)
18084
(6/4)
18094
(6/4)
G
12204
(6/4)
430122
(6/4)
12214
(6/4)
31054
(6/4)
31052
(6/4)
B
21044
(6/4)
24014
(6/4)
C
55012
(6/4)
55014
(6/4)
200 (2x)
D
2552931-1
ECM 130914

ECM: 189753 - 20041104
Group number: 2552931-0100
Assembly Drawing: 2552931-1_2_AB

This list covers pages from 2-42 to 2-45

Pos	Part No	UN	Qty	Description	Page No
-					
12101	90166-0081	MM	1750	TUBE 6 MM PA BLUE	
12204	90166-0081	MM	2070	TUBE 6 MM PA BLUE	
12214	90166-0081	MM	2010	TUBE 6 MM PA BLUE	
18042	90166-0081	MM	2070	TUBE 6 MM PA BLUE	
18052	90166-0081	MM	2000	TUBE 6 MM PA BLUE	
18084	90166-0081	MM	2210	TUBE 6 MM PA BLUE	
18094	90166-0081	MM	2120	TUBE 6 MM PA BLUE	
200	90015-0020		10	LEAD-IN, TET5-7, E-1458016	
21044	90166-0081	MM	2040	TUBE 6 MM PA BLUE	
24014	90166-0081	MM	2760	TUBE 6 MM PA BLUE	
31052	90166-0081	MM	1230	TUBE 6 MM PA BLUE	
31054	90166-0081	MM	1310	TUBE 6 MM PA BLUE	
43012	90166-0081	MM	1800	TUBE 6 MM PA BLUE	
430122	90166-0081	MM	1800	TUBE 6 MM PA BLUE	
55012	90166-0081	MM	2490	TUBE 6 MM PA BLUE	
55014	90166-0081	MM	2700	TUBE 6 MM PA BLUE	

Pos	Part No	UN	Qty	Description	Page No

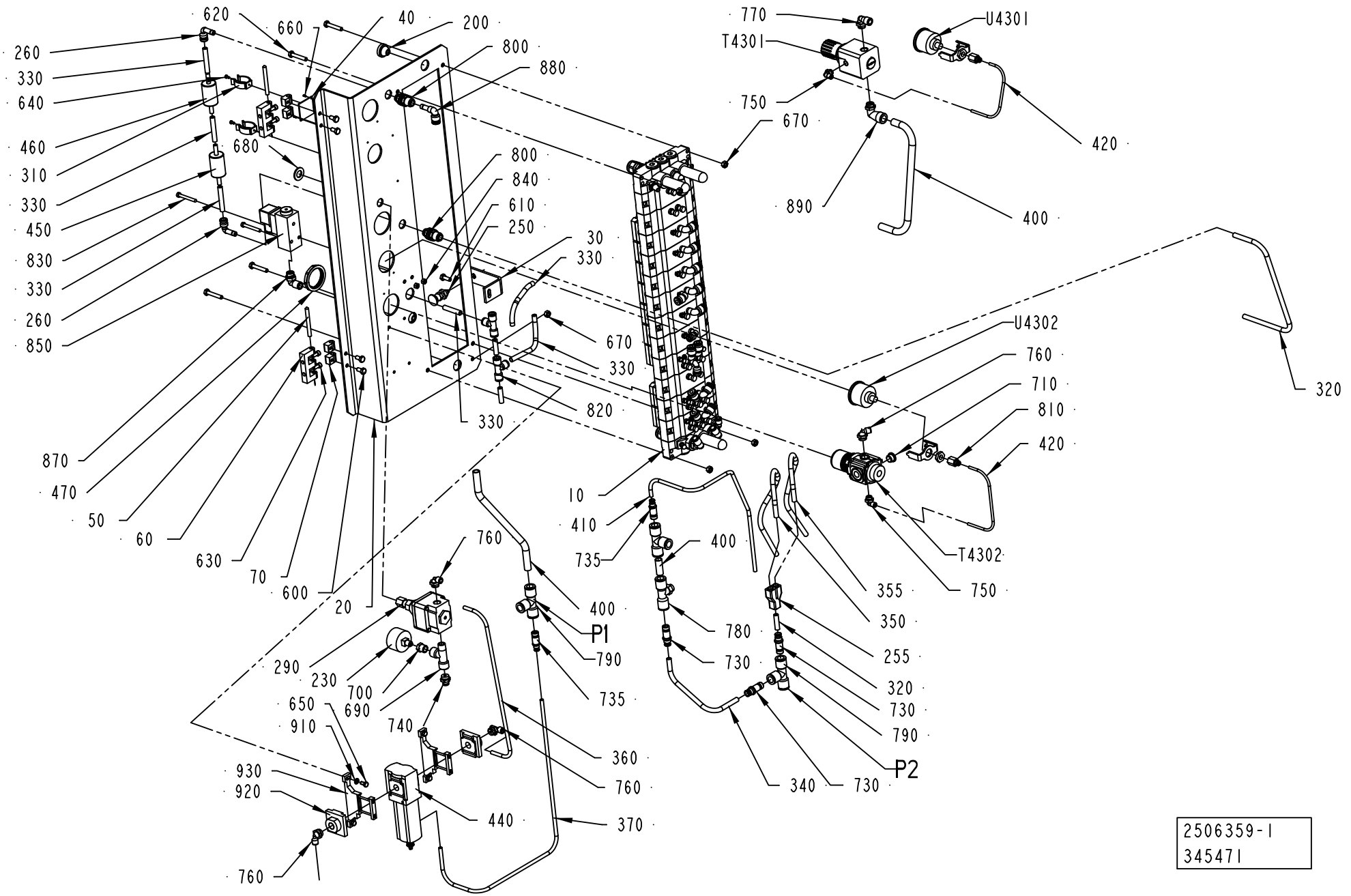
620
660
40
200
260
330
640
800
880
460
680
310
330
450
830
330
260
850
800
840
610
250
30
330
670
330
820
330
870
470
50
60
630
70
600
20
770
T4301
U4301
750
670
420
890
400
U4302
760
710
810
420
320
T4302
750
10
410
735
400
355
350
255
320
730
790
P2
340
730
760
400
P1
790
735
780
730
290
230
700
650
690
910
740
360
760
930
920
440
370
760
2506359-1
345471

ECM: 366168 - 20081002
Group number: 2506359-0100
Assembly Drawing: 2506359-1_1_AI

Pos	Part No	UN	Qty	Description	Page No
A3/FLEX TBA 0500B, A3/FLEX TBA 1000B, A3/FLEX TBA 1000S, A3/FLEX TBA 1000SQ, A3/FLEX TPA 1000SQ, A3/FLEX TBA 0200S, A3/FLEX TBA 1500S, A3/FLEX TBA 0200B, A3/FLEX TBA 0250B, A3/FLEX TBA 0330S, A3/FLEX TPA 0330SQ, A3/FLEX TPA 0500SQ, A3/FLEX TBA 0200M, A3/FLEX TBA 0250S, A3/FLEX TBA 0500S, A3/FLEX TGA 1000SQ, A3/FLEX TGA 0500SQ, A3/FLEX TGA 0750SQ (See drawing on page: 2-46)					
	2527509-0000		1	PNEUMATIC DIAGRAM	
260	90055-0172		2	ELBOW WITH TAILPIECE 8/8 MM	
880	90055-0173		1	ELBOW WITH TAILPIECE 8/6 MM	
A3/FLEX TBA 1890S, A3/FLEX TBA 2000S, A3/FLEX TBA 1400B					
	2719738-0000		1	PNEUMATIC DIAGRAM	
260	90055-0172		2	ELBOW WITH TAILPIECE 8/8 MM	
880	90055-0173		1	ELBOW WITH TAILPIECE 8/6 MM	
Common Parts					
	2527368-0000		1	PNEUMATIC DIAGRAM	
010	2506360-0100		1	VALVE RAMP	**2-49**
020	2506361-0000		1	PANEL	
030	2546319-0000		1	HOLDER	
040	978603-0000		1	SIGN	
050	988685-0000		2	PIN	
060	1035792-0000		2	E-HINGE	
070	1129770-0000		4	BLOCKING PIECE	
200	90015-0023		3	LEAD-IN, TET7-10, E-1458019	
230	90043-0021		1	PRESSURE GAUGE 0-1 BAR 1/8" D=40	
250	90051-0112		1	LOCK KNOB, NO. GN 617 NIK5	
255	90055-0101		1	Y-CONNECTION, 8-8	
290	90113-0056		1	REGULATOR, 11-818-998	
310	90165-0019		2	TOOL CLIP, 81/3, OPEN, 20 - 30 MM	
320	90166-0013	MM	300	TUBE 8 MM PA BLUE	
330	90166-0013	MM	800	TUBE 8 MM PA BLUE	
340	90166-0013	MM	320	TUBE 8 MM PA BLUE	
345	90166-0013	MM	350	TUBE 8 MM PA BLUE	
350	90166-0013	MM	290	TUBE 8 MM PA BLUE	
355	90166-0013	MM	300	TUBE 8 MM PA BLUE	
360	90166-0081	MM	550	TUBE 6 MM PA BLUE	
370	90166-0081	MM	800	TUBE 6 MM PA BLUE	
400	90166-0068	MM	300	TUBE 12 MM PA BLUE	
410	90166-0081	MM	600	TUBE 6 MM PA BLUE	
420	90166-0095	MM	300	TUBE 4 MM PA BLUE (50M)	
440	90459-2338		1	FILTER, MS4-LF-1/4-CRV	
	90459-3818		*1*	*FILTER CARTRIDGE, MS4-LFP-C*	
450	90277-0045		1	FILTER / 9900-05-BK	
460	90277-0046		1	FILTER / 9933-05-101	
470	90457-0078		1	PANEL NUT	
600	312105-0366		4	SCREW M6S ISO 4017 M6X12 A480	
610	312105-0368		1	SCREW M6S ISO 4017 M6X16 A480	
620	312109-0376		4	SCREW M6S ISO 4017 M6X35 A480	
630	312115-0327		4	SCREW ISO4762 M5X12 A4 80	
640	312125-0220		2	SCREW ISO 1207 M3X6 A4	
650	312105-0325		4	SCREW M6S ISO 4017 M5X10 A480	
660	312502-0120		2	DRIVE SCREW ROUND HEAD KDS 0X5	
670	312605-0316		5	HEXAGON NUT, M6M M6 A280	
680	315105-0178		1	WASHER BRB 13X24 RFR	
690	342245-0102		1	T-PIPE, INT. THREAD, R1/4XKR1/4	
700	342701-0201		1	BUSHING,INT./EXT.G-THREAD G1/4"-G1/8"	
710	342713-0210		1	PLUG, EXT THREAD HEX SOCKET	
730	342716-0209		3	REDUCER 8-12	
735	342716-0210		2	REDUCER 6-12	
740	342722-0203		1	STRAIGHT COUPLING	
750	90458-2955		2	ELBOW PIPE JOINT, EXT.THREAD,	
760	90458-2957		4	ELBOW PIPE JOINT, EXT.THREAD, D=6MM-G1/4	
770	90458-2958		1	ELBOW PIPE JOINT, EXT.THREAD, D=8MM-G1/4	
780	90055-0278		1	T-COUPLING, ADJ.12-G1/4"	
790	342748-0109		3	T-CONNECTION 12MM	
800	342768-0103		2	BULKHEAD CONNECTOR, 8 MM	
810	342770-0101		2	RAIGHT COUPLING INT, D=4 MM - G1/8	
820	342748-0103		2	T-CONNECTION 8MM	
830	312125-0339		2	SCREW ISO 1207 M5X40 A4	
840	312607-0314		2	HEXAGON NUT, EN 24032 M6M M5 A480	
850	90274-0103		1	PRESSURE GUARD PEV-1/4-B (10773	
870	350002-0009		1	PUSH-IN L-FITTING QSL-F-G1/4-8	
890	90458-2959		1	ELBOW PIPE JOINT, EXT.THREAD,D=12MM-G1/4	
900	350006-0007		1	PUSH-IN FITTING QS-F-12H-6	
910	315105-0146		4	WASHER BRB 5,3X10 RFR	
920	90459-2246		1	END PLATE, MS4-AGB	
930	90459-2247		2	BRACKET, MS4-WP	
T4301	90600-3050		1	REGULATOR, SA-235942A	
T4302	90457-0144		1	REGULATOR 0,3-2 BAR	
U4301	90043-0090		1	PRESSURE GAUGE, 2048 D=40 MM	
U4302	90043-0090		1	PRESSURE GAUGE, 2048 D=40 MM	

Machine Type | Group Description | Used-In | Group Number | Page No

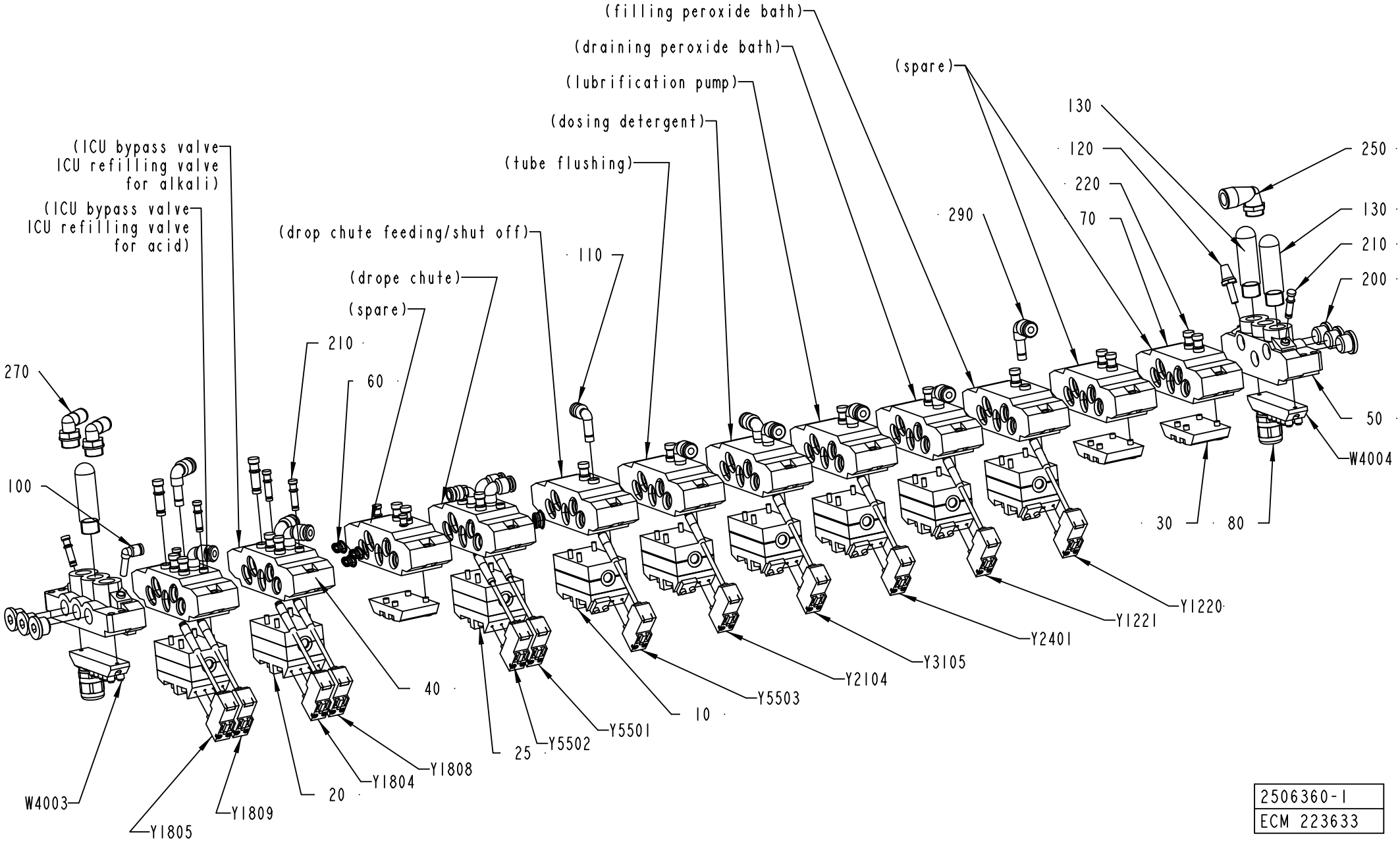

2506360-1
ECM 223633

ECM: 265568 - 20060425
Group number: 2506360-0100
Assembly Drawing: 2506360-1_1_AC

Pos	Part No	UN	Qty	Description	Page No
A3/FLEX					
010	90042-0215		6	VALVE BODY 5/2 UNISTABLE	
020	90042-0271		2	VALVE BODY 2X3/2	
060	90042-0528		4	BLANKING KIT SEALS ISO SIZE 1	
070	90042-0532		10	BASE PLATE ISO SIZE 1	
110	90055-0172		2	ELBOW WITH TAILPIECE 8/8 MM	
130	90328-0024		3	SILENCER G3/8"	
210	342715-0102		8	BLIND PLUG 6 MM	
220	342715-0103		19	BLIND PLUG 8 MM	
270	350002-0012		2	PUSH-IN L-FITTING QSL-F-G3/8-8	
290	90055-0173		12	ELBOW WITH TAILPIECE 8/6 MM	
Y1220	90042-0538		1	PILOT VALVE L=500MM	
Y1221	90042-0538		1	PILOT VALVE L=500MM	
Y1804	90042-0538		1	PILOT VALVE L=500MM	
Y1805	90042-0538		1	PILOT VALVE L=500MM	
Y1808	90042-0538		1	PILOT VALVE L=500MM	
Y1809	90042-0538		1	PILOT VALVE L=500MM	
Y2104	90042-0538		1	PILOT VALVE L=500MM	
Y2401	90042-0538		1	PILOT VALVE L=500MM	
Common Parts					
025	90042-0230		1	VALVE BODY 5/3 OPEN CENTRE	
030	90042-0519		3	BLANK PLATE ISO SIZE 1	
040	90042-0520		3	BASE PLATE ISO SIZE 1	
050	90042-0522		2	PORTED END PIECE ISO SIZE 1	
080	90042-0535		2	TERMINAL BOARD 19 CORDS	
100	90055-0217		1	ELBOW PIPE JOINT	
120	90328-0017		1	SILENCER, D=6 MM	
200	342713-0211		6	PLUG, EXT THREAD HEX SOCKET 8638-00-380	
250	90458-2960		1	ELBOW PIPE JOINT, EXT.THREAD,D=12MM-G3/8	
Y3105	90042-0538		1	PILOT VALVE L=500MM	
Y5501	90042-0538		1	PILOT VALVE L=500MM	
Y5502	90042-0538		1	PILOT VALVE L=500MM	
Y5503	90042-0539		1	PILOT VALVE L=350MM	

Pos	Part No	UN	Qty	Description	Page No

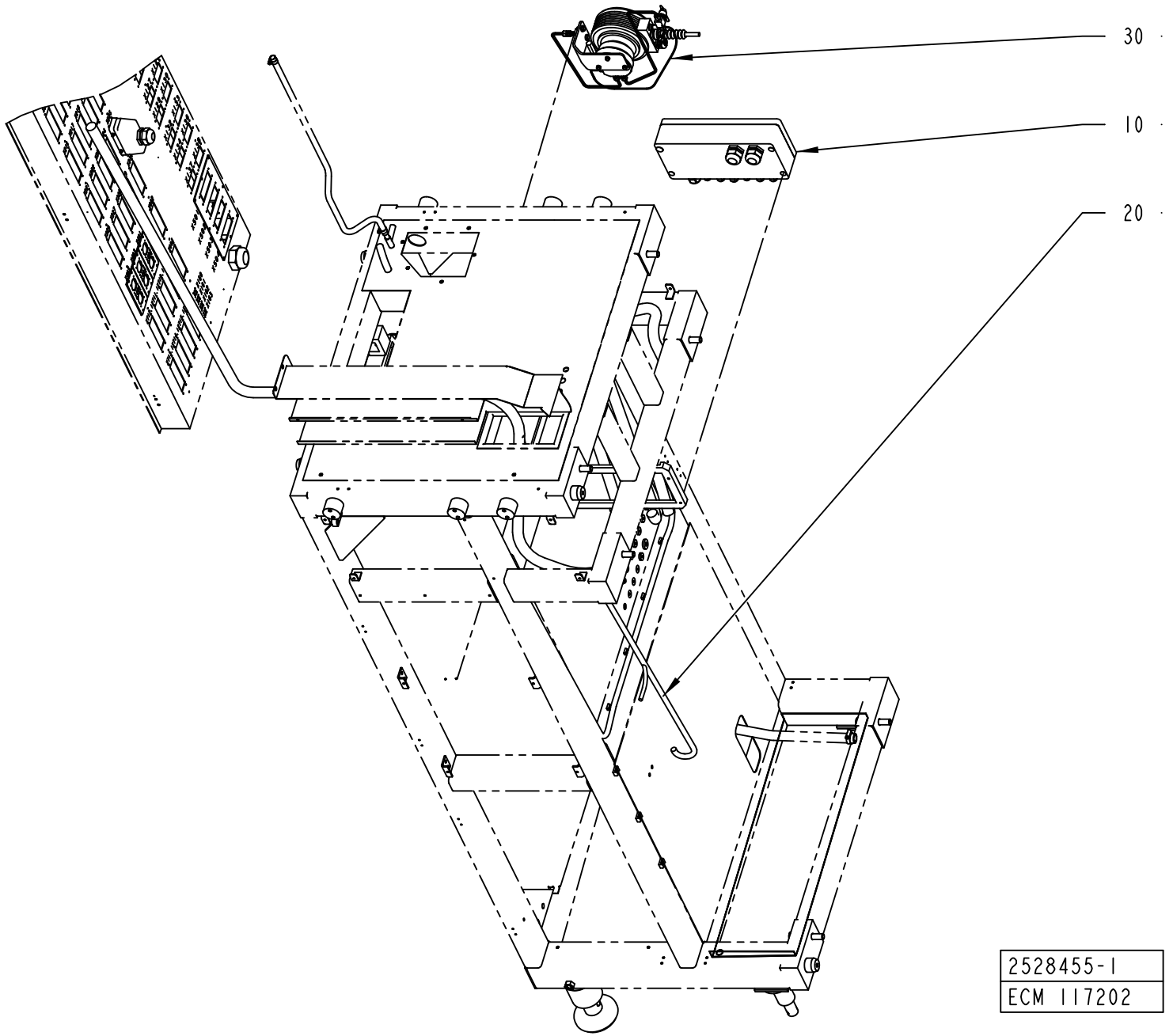
30
10
20
2528455-1
ECM 117202

ECM: 117202 - 20030403
Group number: 2528455-0100
Assembly Drawing: 2528455-1_1_AA

Pos	Part No	UN	Qty	Description	Page No
-					
010	2527253-0100		1	CONNECTION BOX	**2-53**
020	2529499-0100		1	CABLE HARNESS	**2-55, 2-57**
030	2519574-0100		1	HYDROGEN PEROXIDE CONCENTRATION METER	**2-59**

Pos	Part No	UN	Qty	Description	Page No

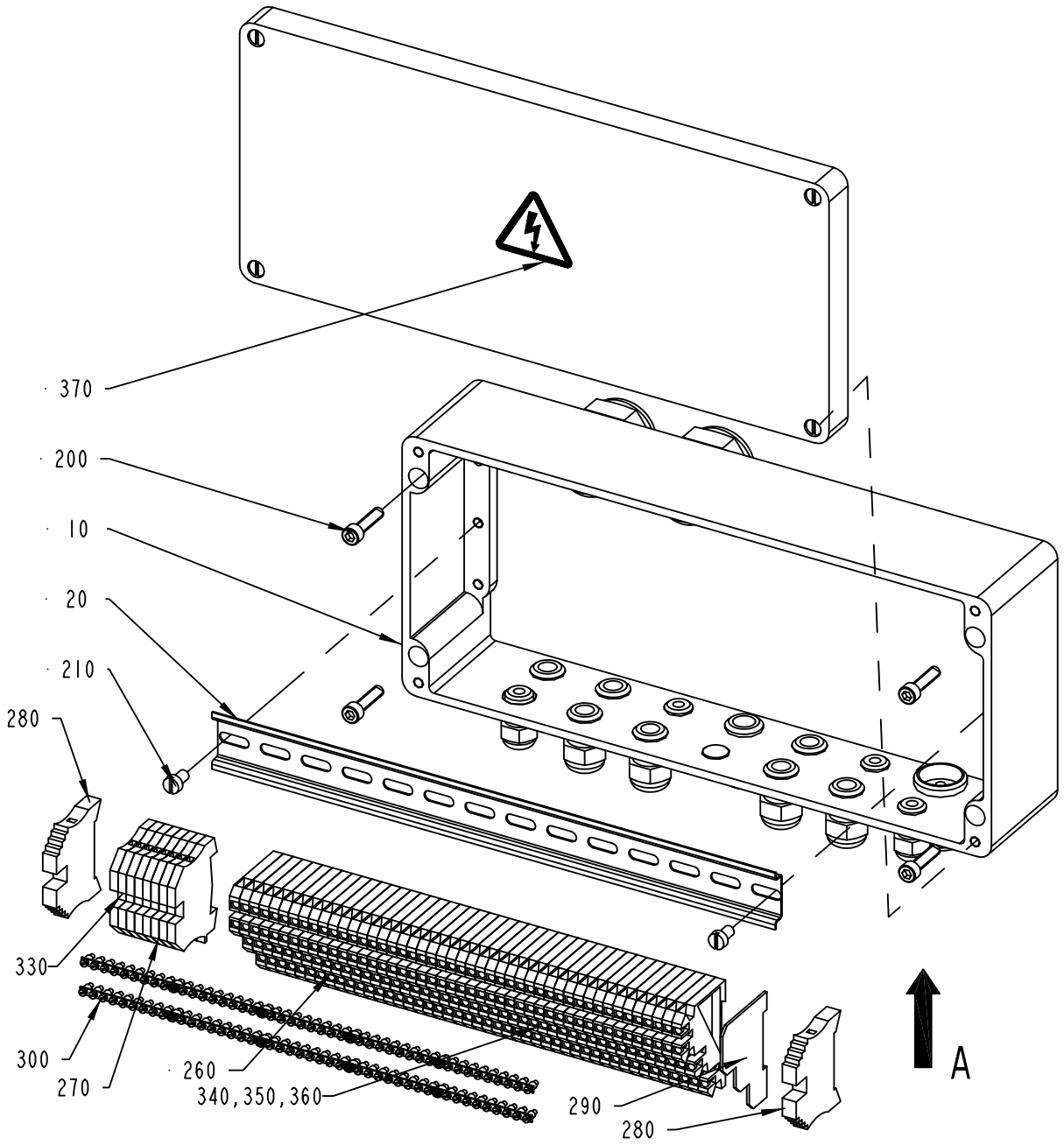

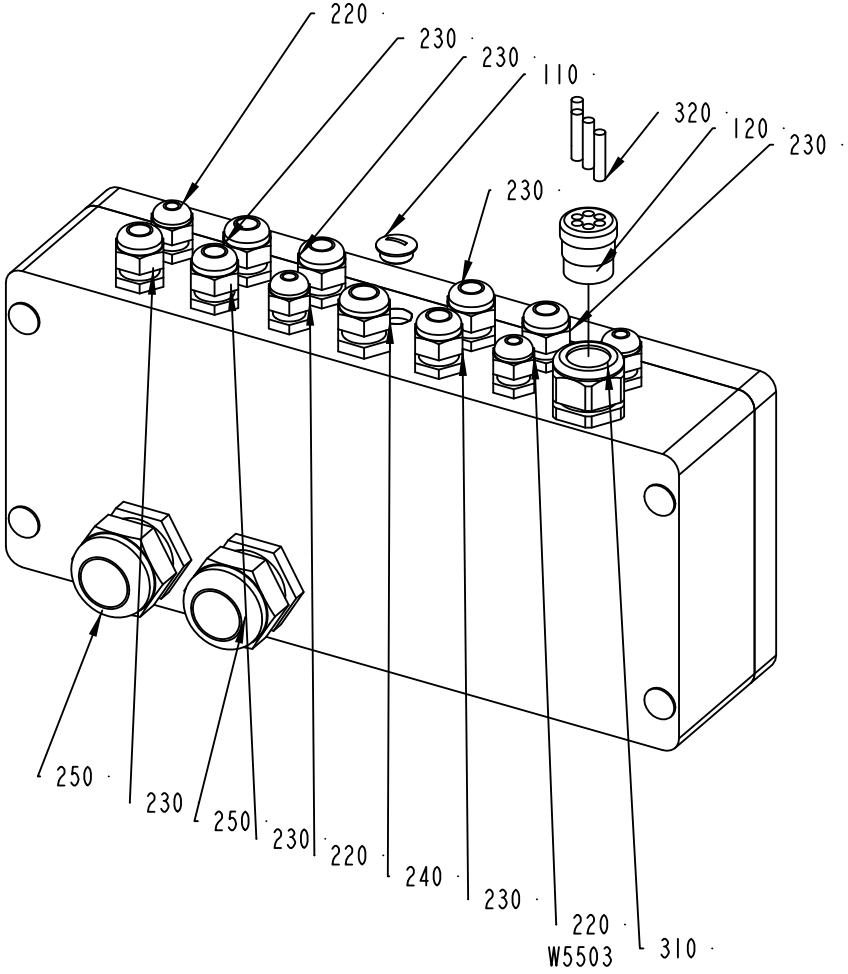

VIEW FROM A

2527253-1
313511

ECM: 339947 - 20080402
Group number: 2527253-0100
Assembly Drawing: 2527253-1_1_AC

Pos	Part No	UN	Qty	Description	Page No
-					
010	2537112-0000		1	BOX	
020	2546496-0000		1	RAIL	
110	90002-0013		1	BLANK-OFF PLUG, PR 15,2 SKINDICHT-BLK9	
120	90012-0125		1	GLAND FITTING	
200	312115-0372		4	SCREW ISO4762 M6X25 A4 80	
210	312121-0364		2	SCREW ISO 1207 M6X10 4.8-5.8 Z.PL.	
220	352103-0100		4	CABLE GLAND, STR 9, PR15,2/PG9	
230	352103-0106		7	CABLE GLAND, ST 11, PR18,6/PG11	
240	352103-0108		1	CABLE GLAND, ST 13,5 , PR20,4/PG13,5	
250	352103-0121		2	CABLE GLAND, ST 29, PR37,0/PG29	
260	353021-0301		46	TERMINALS,TRIPLE-LEVEL, DLI 2,5/35 PA	
270	353024-0204		8	EARTH TERMINAL WPE 2,5	
280	353031-0203		2	END SUPPORT, WEW 35/2	
290	353032-0301		1	END PLATE WAP, 13132.6	
300	353034-0404		10	BRIDGE CONNECTOR Q10, 13131.0	
310	353240-0005		1	GLAND W/O INSERT PG21 NORMAL	
320	353249-0303		4	SEALING PIN, 5,3X25	
330	359011-0834		1	SET OF SIGNS 6-GW(EARTH)	
340	359011-0817		1	SYMBOL 5-GW (+) 50PC	
350	359011-0818		1	SYMBOL 5-GW (-) 50PC	
360	359011-0823		2	SET OF SIGNS 6-FW 101-150	
370	359705-0015		1	WARNING SIGN ISO, RISK OF ELECTRIC SHOCK	

Pos	Part No	UN	Qty	Description	Page No

Machine Type | Group Description | Used-In | Group Number | Page No

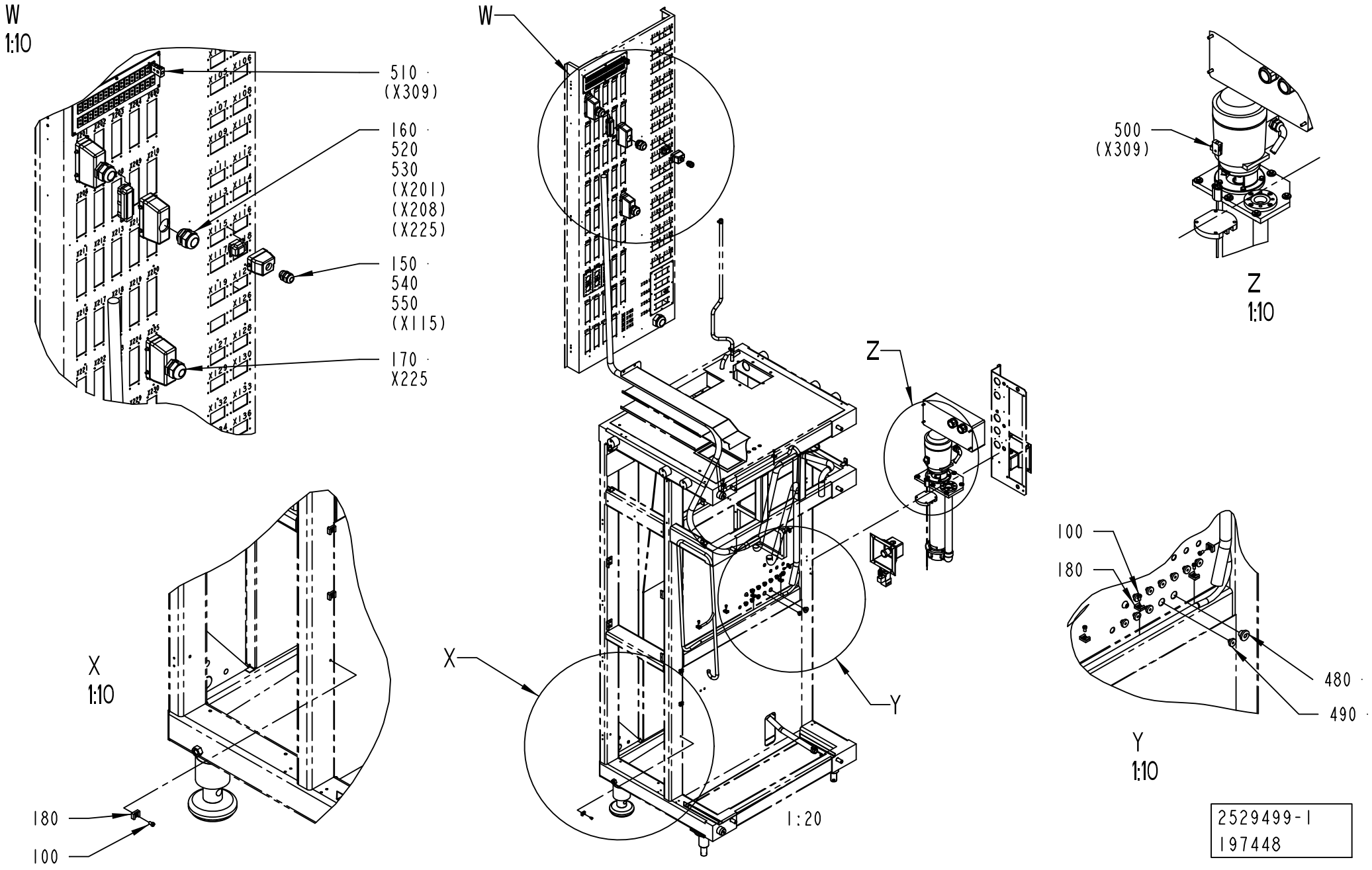
W
1:10
510 · (X309)
160 · 520 530 (X201) (X208) (X225)
150 · 540 550 (X115)
170 · X225
W
500 (X309)
Z
1:10
Z
X
1:10
180
100
X
Y
1:20
100
180
480 ·
490 ·
Y
1:10
2529499-1
197448

ECM: 217855 - 20050701
Group number: 2529499-0100
Assembly Drawing: 2529499-1_1_AB

This list covers pages from 2-54 to 2-57

Pos	Part No	UN	Qty	Description	Page No
-					
100	312125-0364		12	SCREW ISO 1207 M6X10 A4	
150	352103-0108		1	CABLE GLAND, ST 13,5 , PR20,4/PG13,5	
160	352103-0121		3	CABLE GLAND, ST 29, PR37,0/PG29	
170	352103-0120		1	CABLE GLAND, STR 29, PR37,0/PG29	
180	352113-0204		12	ANCHOR PLATES FOR STRIPS, TYPE TM3S25-M	
480	90015-0021		1	LEAD-IN, TET10-14, E-1458023	
490	90015-0021		10	LEAD-IN, TET10-14, E-1458023	
500	90326-0020		1	PLUG, FEMALE YELLOW CR-AL	
510	90326-0022		1	PLUG, MALE YELLOW CR-AL	
520	90110-0150		3	MALE INSERT 121110 0000	
530	90110-0152		3	CABLE HOOD 24-POL 70.352.2428.1	
540	90110-0157		1	CABLE HOOD 6-POL 70.352.0628.1	
550	90110-0159		1	MALE INSERT 70.310.0640.0	
560	359005-0010		1	MARKING LABEL KIT 0 - 9, 04.841.2150.0	
570	359005-0050		3	MARKING LABEL KIT X, 04.841.4550.0	
580	90110-0385		3	MARKING HOLDER, 4.242.3853.0	
W1005	351150-0418	MM	6000	CABLE OLFLEX 4X2,5 MM2 LIGHT/GREY	
W1304	90220-0034	MM	7500	THERMOCABLE TEX/SITW-20F-KX 2X0,5MM2	
W1802	351150-0404	MM	2500	CABLE OLFLEX 4X0,75 MM2 LIGHT/GREY	
W1804	351150-0403	MM	3800	CABLE OLFLEX 3X0,75 MM2 LIGHT/GREY	
W1805	351150-0403	MM	3800	CABLE OLFLEX 3X0,75 MM2 LIGHT/GREY	
W1806	351150-0404	MM	2500	CABLE OLFLEX 4X0,75 MM2 LIGHT/GREY	
W2254	351150-0405	MM	3000	CABLE OLFLEX 5X0,75 MM2 LIGHT/GREY	
W2255	351150-0405	MM	5000	CABLE OLFLEX 5X0,75 MM2 LIGHT/GREY	
W4001	351150-0425	MM	5000	CABLE OLFLEX 25X0,75 MM2 LIGHT/GREY	
W4002	351150-0425	MM	5000	CABLE OLFLEX 25X0,75 MM2 LIGHT/GREY	
W4022	351150-0403	MM	2300	CABLE OLFLEX 3X0,75 MM2 LIGHT/GREY	
W4054	351150-0406	MM	2000	CABLE OLFLEX 7X0,75 MM2 LIGHT/GREY	
W5503	351150-0403	M	3	CABLE OLFLEX 3X0,75 MM2 LIGHT/GREY	

Pos	Part No	UN	Qty	Description	Page No

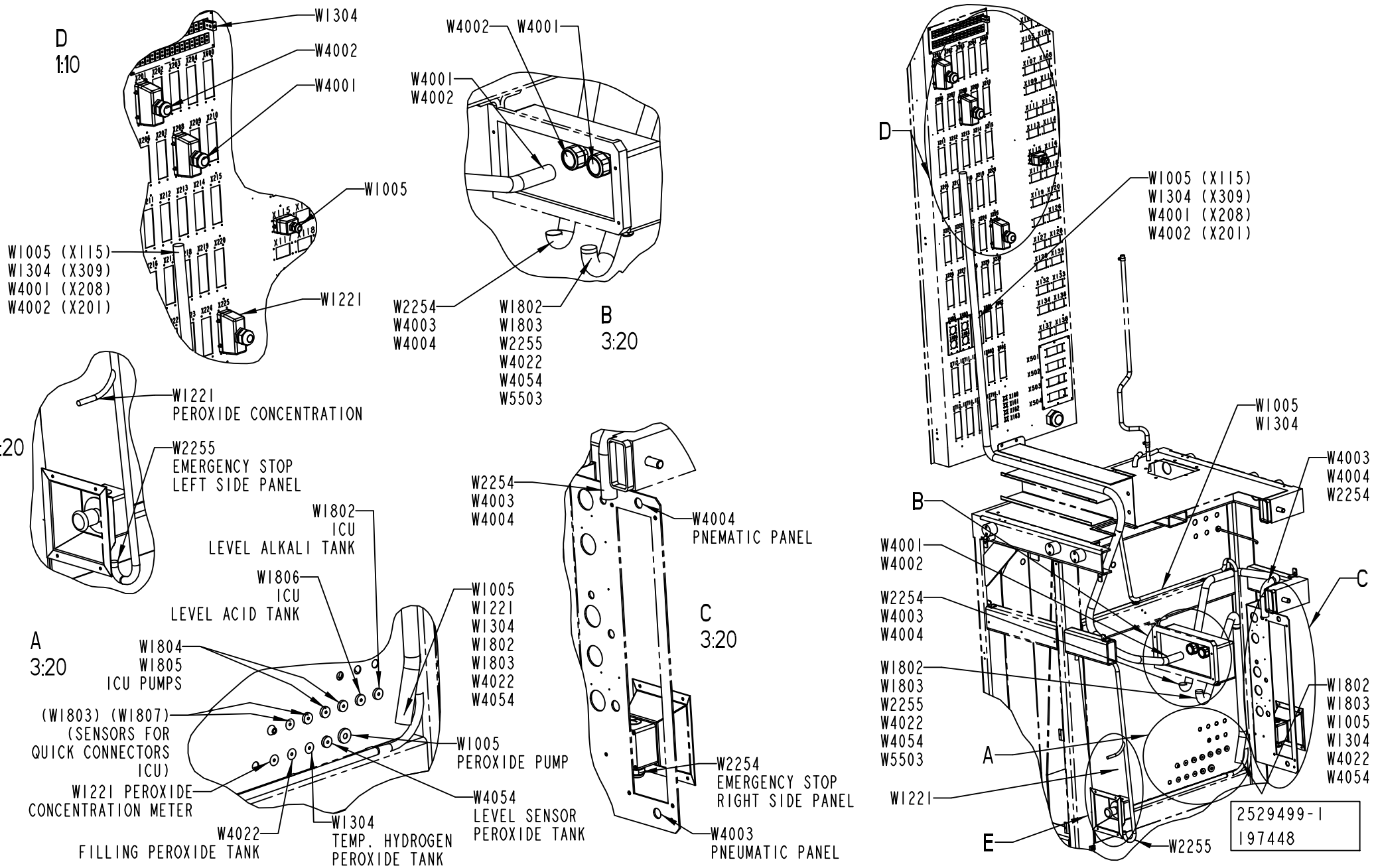
D
1:10
W1304
W4002
W4001
W1005
W1005 (X115)
W1304 (X309)
W4001 (X208)
W4002 (X201)
W1221
W4002
W4001
W4001
W4002
W2254
W4003
W4004
W1802
W1803
W2255
W4022
W4054
W5503
B
3:20
E
3:20
W1221
PEROXIDE CONCENTRATION
W2255
EMERGENCY STOP
LEFT SIDE PANEL
W1802
ICU
LEVEL ALKALI TANK
W1806
ICU
LEVEL ACID TANK
A
3:20
W1804
W1805
ICU PUMPS
(W1803) (W1807)
(SENSORS FOR
QUICK CONNECTORS
ICU)
W1221 PEROXIDE
CONCENTRATION METER
W4022
FILLING PEROXIDE TANK
W1304
TEMP. HYDROGEN
PEROXIDE TANK
W1005
W1221
W1304
W1802
W1803
W4022
W4054
W1005
PEROXIDE PUMP
W4054
LEVEL SENSOR
PEROXIDE TANK
W2254
W4003
W4004
W4004
PNEMATIC PANEL
C
3:20
W2254
EMERGENCY STOP
RIGHT SIDE PANEL
W4003
PNEUMATIC PANEL
D
W1005 (X115)
W1304 (X309)
W4001 (X208)
W4002 (X201)
W1005
W1304
W4003
W4004
W2254
B
W4001
W4002
C
W2254
W4003
W4004
W1802
W1803
W2255
W4022
W4054
W5503
A
W1221
E
W2255
W1802
W1803
W1005
W1304
W4022
W4054
2529499-1
197448

ECM: 217855 - 20050701
Group number: 2529499-0100
Assembly Drawing: 2529499-1_2_AB

This list covers pages from 2-54 to 2-57

Pos	Part No	UN	Qty	Description	Page No
-					
100	312125-0364		12	SCREW ISO 1207 M6X10 A4	
150	352103-0108		1	CABLE GLAND, ST 13,5 , PR20,4/PG13,5	
160	352103-0121		3	CABLE GLAND, ST 29, PR37,0/PG29	
170	352103-0120		1	CABLE GLAND, STR 29, PR37,0/PG29	
180	352113-0204		12	ANCHOR PLATES FOR STRIPS, TYPE TM3S25-M	
480	90015-0021		1	LEAD-IN, TET10-14, E-1458023	
490	90015-0021		10	LEAD-IN, TET10-14, E-1458023	
500	90326-0020		1	PLUG, FEMALE YELLOW CR-AL	
510	90326-0022		1	PLUG, MALE YELLOW CR-AL	
520	90110-0150		3	MALE INSERT 121110 0000	
530	90110-0152		3	CABLE HOOD 24-POL 70.352.2428.1	
540	90110-0157		1	CABLE HOOD 6-POL 70.352.0628.1	
550	90110-0159		1	MALE INSERT 70.310.0640.0	
560	359005-0010		1	MARKING LABEL KIT 0 - 9, 04.841.2150.0	
570	359005-0050		3	MARKING LABEL KIT X, 04.841.4550.0	
580	90110-0385		3	MARKING HOLDER, 4.242.3853.0	
W1005	351150-0418	MM	6000	CABLE OLFLEX 4X2,5 MM2 LIGHT/GREY	
W1304	90220-0034	MM	7500	THERMOCABLE TEX/SITW-20F-KX 2X0,5MM2	
W1802	351150-0404	MM	2500	CABLE OLFLEX 4X0,75 MM2 LIGHT/GREY	
W1804	351150-0403	MM	3800	CABLE OLFLEX 3X0,75 MM2 LIGHT/GREY	
W1805	351150-0403	MM	3800	CABLE OLFLEX 3X0,75 MM2 LIGHT/GREY	
W1806	351150-0404	MM	2500	CABLE OLFLEX 4X0,75 MM2 LIGHT/GREY	
W2254	351150-0405	MM	3000	CABLE OLFLEX 5X0,75 MM2 LIGHT/GREY	
W2255	351150-0405	MM	5000	CABLE OLFLEX 5X0,75 MM2 LIGHT/GREY	
W4001	351150-0425	MM	5000	CABLE OLFLEX 25X0,75 MM2 LIGHT/GREY	
W4002	351150-0425	MM	5000	CABLE OLFLEX 25X0,75 MM2 LIGHT/GREY	
W4022	351150-0403	MM	2300	CABLE OLFLEX 3X0,75 MM2 LIGHT/GREY	
W4054	351150-0406	MM	2000	CABLE OLFLEX 7X0,75 MM2 LIGHT/GREY	
W5503	351150-0403	M	3	CABLE OLFLEX 3X0,75 MM2 LIGHT/GREY	

Pos	Part No	UN	Qty	Description	Page No

Machine Type | Group Description | Used-In | Group Number | Page No

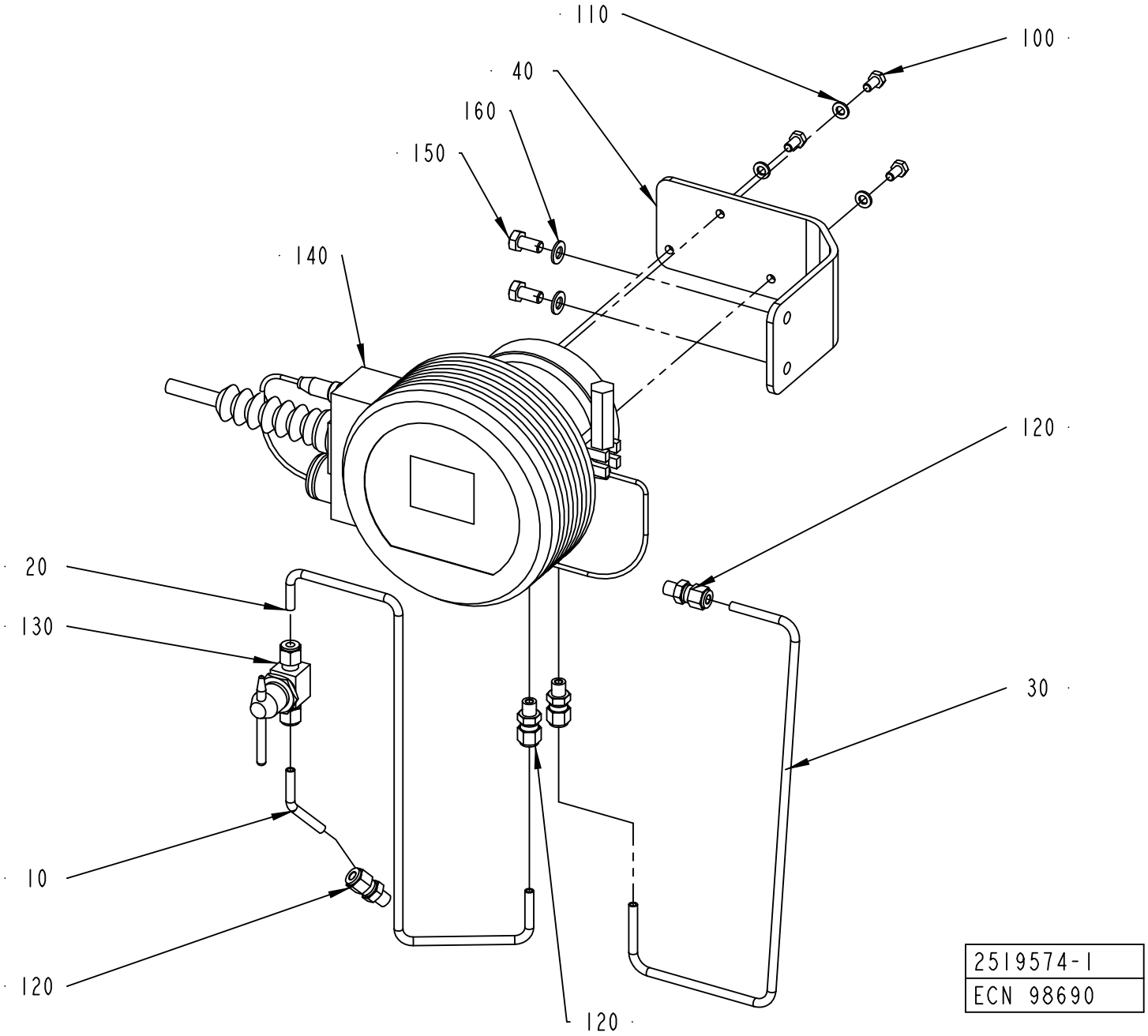
110
100
40
160
150
140
120
20
130
30
10
120
120
2519574-1
ECN 98690

ECM: 224852 - 20050831
Group number: 2519574-0100
Assembly Drawing: 2519574-1_1_AA

Pos	Part No	UN	Qty	Description	Page No
-					
010	2501378-0000		1	PIPE	
020	2531500-0000		1	PIPE	
030	2531501-0000		1	PIPE	
040	2519556-0000		1	BRACKET	
100	312105-0366		3	SCREW M6S ISO 4017 M6X12 A480	
110	315105-0153		3	WASHER BRB 6,4X12 RFR	
120	90458-1477		4	CONNECTOR 6-1/8 NPT, EXT. TAPERED	
130	90458-1478		1	BALL VALVE SS-43GS6MM-SH	
140	90458-1977		1	REFRACTOMETER SET DA15FC15A DFTP A	
	90458-2269		*1*	*DEFLECTOR A0808137*	
	90458-1980		*1*	*REFRACTOMETER DA16FC16B*	
	90458-1979		*1*	*BELLOWS A0710020*	
	90458-1976		*1*	*CABLE A0804273*	
	90458-1950		*1*	*PROBE A0803021 IPT100 1/8" GAS TRIC-B*	
	90458-1892		*1*	*GASKET A0539066 73X90,5X2 MM*	
	90458-1893		*1*	*CARTRIDGE A0111004*	
	90458-1940		*1*	*CLAMP A0515170 3" AISI 304*	
	90458-1943		*1*	*O-RING A0701145 53,65X2,62 MM*	
	90458-1941		*1*	*O-RING A0701180 10,82X1,78 MM*	
150	312105-0449		2	SCREW M6S ISO 4017 M8X16 A480	
160	315105-0165		2	WASHER BRB 8,4X16 RFR	

Pos	Part No	UN	Qty	Description	Page No

Machine Type | Group Description | Used-In | Group Number | Page No

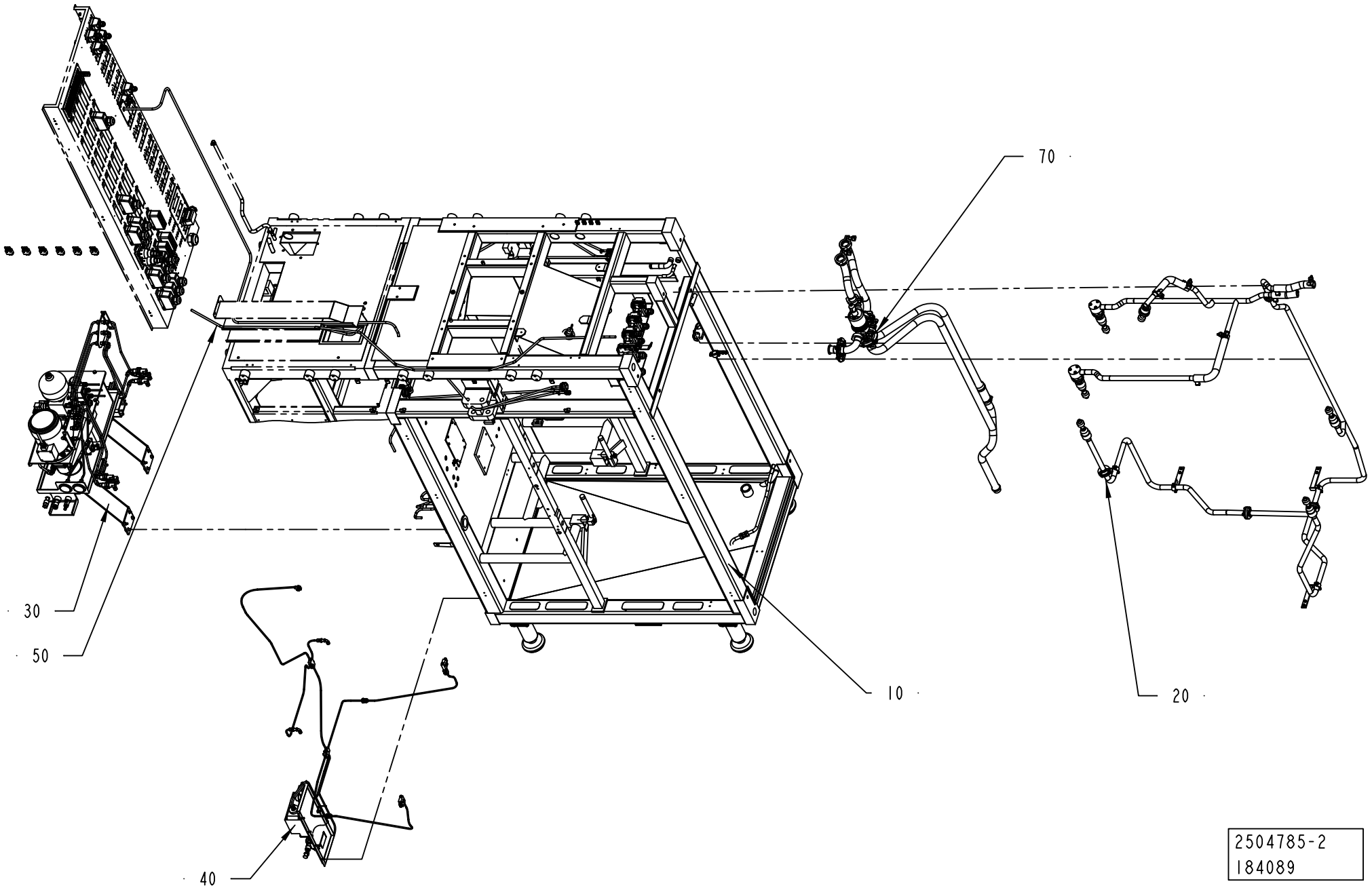
70
30
50
10
20
40
2504785-2
184089

ECM: 274233 - 20061101
Group number: 2504785-0250
Assembly Drawing: 2504785-2_1_AA

Pos	Part No	UN	Qty	Description	Page No
-					
010	2504786-0200		1	MACHINE BODY	**2-63**
020	2504787-0100		1	CLEANING SYSTEM	**2-69, 2-71**
030	2546500-0100		1	HYDRAULIC SYSTEM	**2-73**
040	2529167-0200		1	LUBRICATING SYSTEM	**2-87**
050	2529116-0150		1	ELECTRIC EQUIPMENT	**2-93**
070	2504792-0100		1	DRAINING	**2-125**

Pos	Part No	UN	Qty	Description	Page No

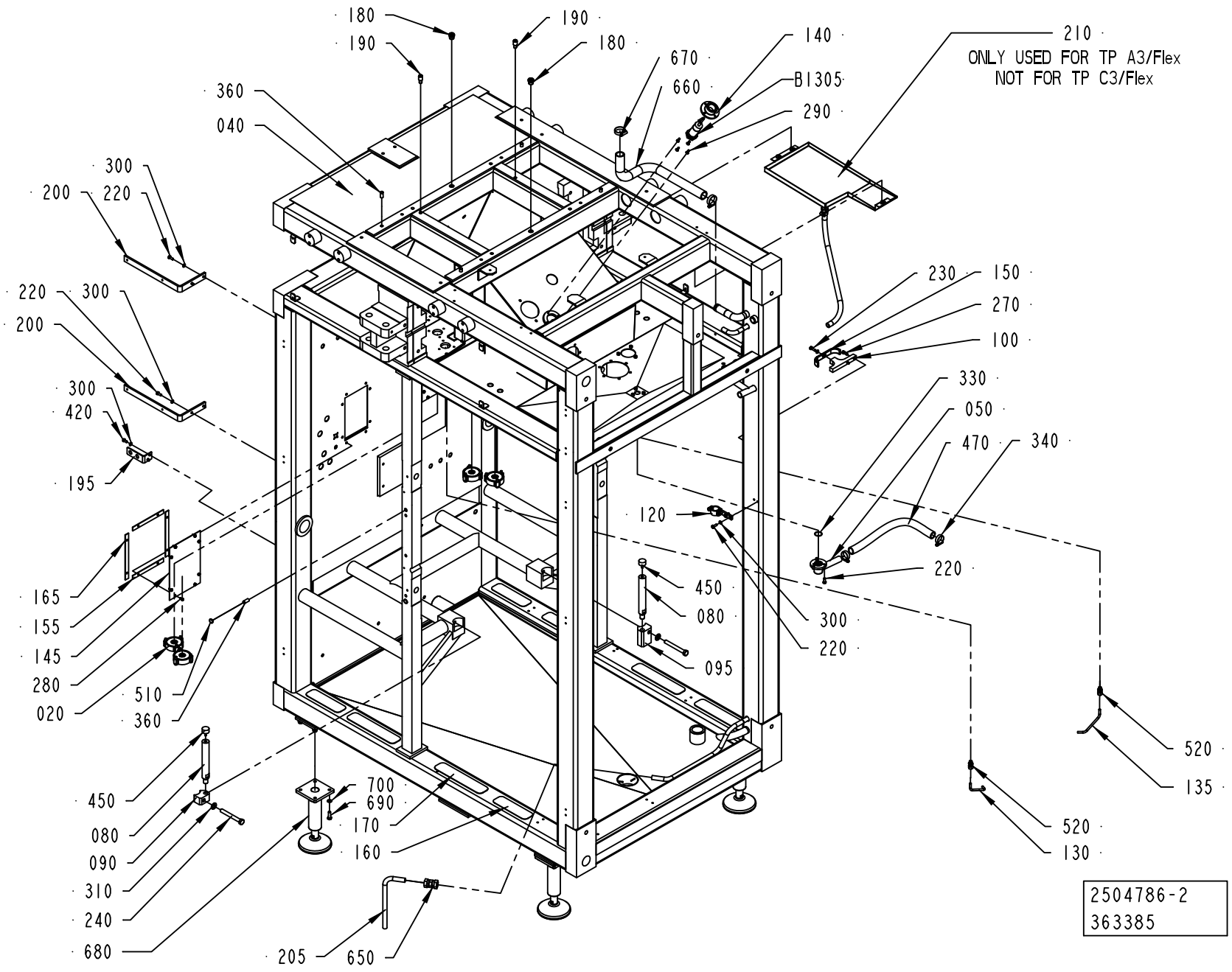
180
190
190
180
360
040
670
660
140
B1305
290
210
ONLY USED FOR TP A3/Flex
NOT FOR TP C3/Flex
300
200
220
220
300
200
230
150
270
100
300
420
195
330
050
470
340
120
220
165
155
145
280
020
510
360
450
080
095
300
220
520
135
520
130
450
080
090
310
240
680
700
690
170
160
205
650
2504786-2
363385

ECM: 369713 - 20090101
Group number: 2504786-0200
Assembly Drawing: 2504786-2_1_AF

Pos	Part No	UN	Qty	Description	Page No
A3/FLEX					
145	2598844-0000		2	COVER	
210	2985891-0100		1	PROTECTION	**2-65**
Common Parts					
020	2542491-0100		4	HOLDER	**2-67**
040	2723460-0000		1	FRAME	
050	2509552-0000		1	DRAINING	
080	2542340-0000		2	COLUMN	
090	2542493-0000		1	BLOCK	
095	2542494-0000		1	BLOCK	
100	2510901-0000		1	BRACKET	
120	2510904-0000		1	HOLDER	
130	2542341-0000		1	DRAINING	
135	2543349-0000		1	DRAINING	
140	450457-0000		1	FLANGE	
150	2537120-0000		1	BRACKET	
155	2529341-0000		4	GASKET	
160	1103298-0000		4	NON-SKID	
165	2529342-0000		4	GASKET	
170	1103300-0000		4	NON-SKID	
180	1490046-0000		2	PIN	
190	2514804-0000		2	PIN	
195	2764809-0000		1	CANTILEVER	
200	2524504-0000		2	BRACKET	
205	2565526-0000		1	PIPE	
220	312105-0368		9	SCREW M6S ISO 4017 M6X16 A480	
230	312105-0370		1	SCREW M6S ISO 4017 M6X20 A480	
240	312105-0552		2	SCREW M6S ISO 4014 M12X100 A480	
270	312115-0368		2	SCREW ISO4762 M6X16 A4 80	
280	312105-0325		16	SCREW M6S ISO 4017 M5X10 A480	
290	312155-0329		4	SCREW DIN 7991 MF6S M5X16 A4 70	
300	315105-0153		9	WASHER BRB 6,4X12 RFR	
310	315105-0178		2	WASHER BRB 13X24 RFR	
330	315202-0709		1	O-RING 23,52X1,78 MM	
340	342991-0105		2	HOSE CLIP,WORM DRIVE TYPE (27)-30	
360	311103-1456		6	PARALLEL PIN ISO 2338 10M6X24 A1	
420	312105-0366		2	SCREW M6S ISO 4017 M6X12 A480	
450	90347-0034		2	VIBRATION DAMPER	
470	90166-0151	MM	440	HOSE	
510	90261-0057		4	PLUG, BLIND, PLASTIC	
520	90030-0184		2	CONN. STR. GE06LRED71	
600	90157-0016		1	LOCKING FLUID LOCTITE 242 50 ML	
650	342727-0214		1	CONN. PIPE G-15-L/SY	
660	90166-0158	MM	700	HOSE	
670	342991-0106		2	HOSE CLIP,WORM DRIVE TYPE (30)-36	
680	90600-0724		4	FOOT 25000N, R0773 611223	
690	312105-0453		16	SCREW M6S ISO 4017 M8X25 A480	
700	315105-0165		16	WASHER BRB 8,4X16 RFR	
B1305	90458-0256		1	PROX.SWITCH IIA 3010-BPKG/6M	

Machine Type	Group Description	Used-In	Group Number	Page No

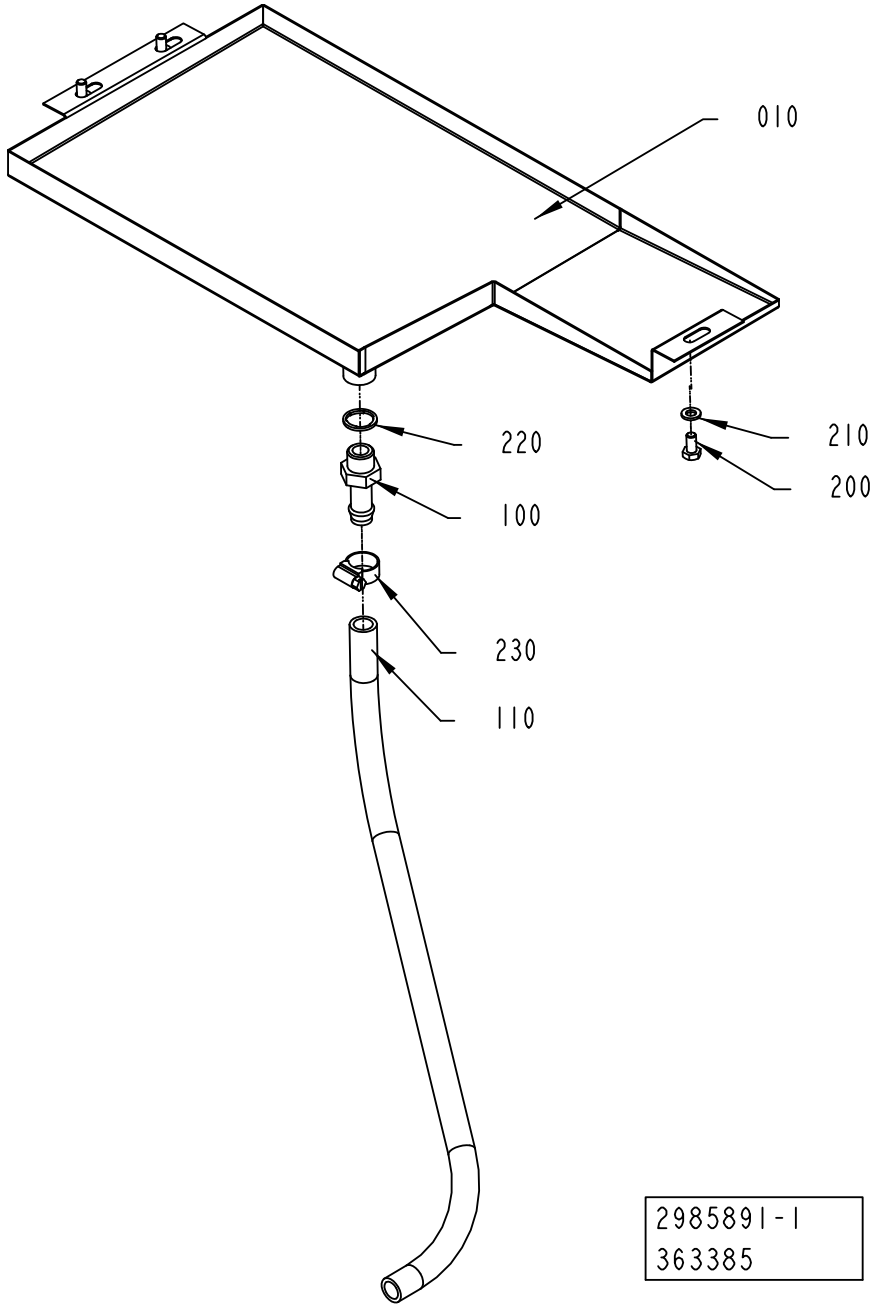
010
220
210
200
100
230
110
2985891-1
363385

ECM: 367383 - 20090101
Group number: 2985891-0100
Assembly Drawing: 2985891-1_1_AA

Pos	Part No	UN	Qty	Description	Page No
-					
10	2932050-0000		1	PROTECTION	
100	90055-0051		1	HOSE NIPPLE, EXT.THR. R3/8X13 MM	
110	90166-0198	MM	700	RUBBER HOSE	
200	312105-0366		3	SCREW M6S ISO 4017 M6X12 A480	
210	315105-0153		3	WASHER BRB 6,4X12 RFR	
220	315239-0111		1	NYLON WASHER G3/8, 3/8RRP	
230	342991-0102		1	HOSE CLIP,WORM DRIVE TYPE (16)-19	

Pos	Part No	UN	Qty	Description	Page No

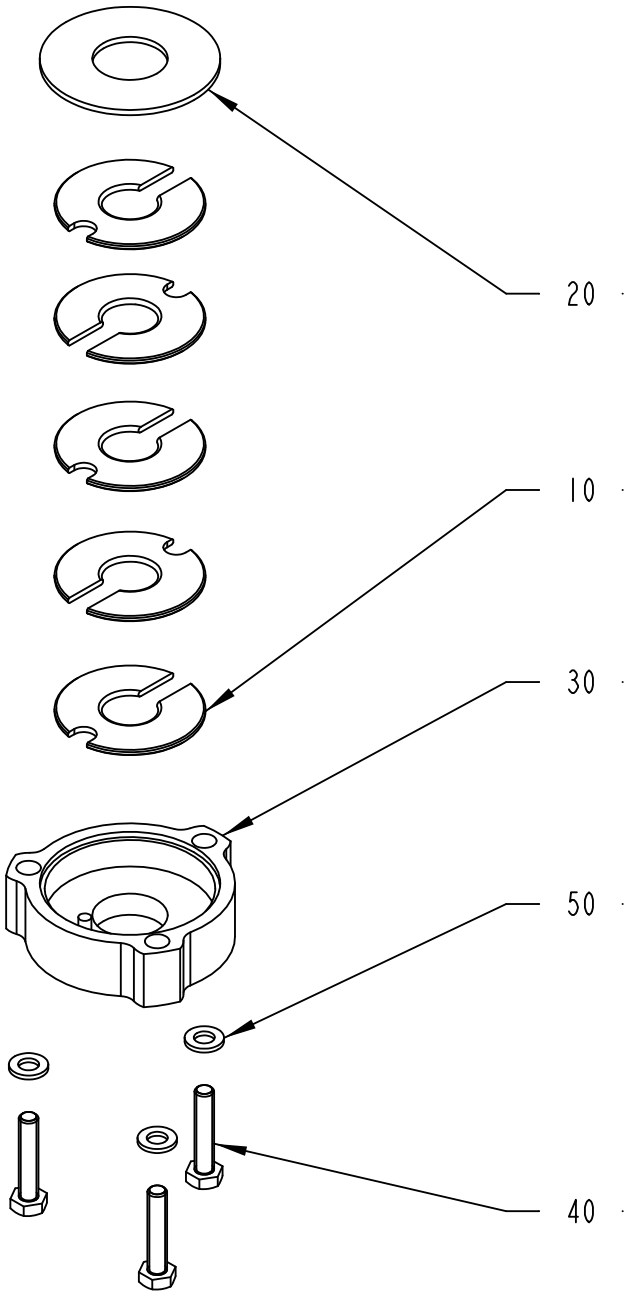

2542491-1
ECM 117204

ECM: 189758 - 20041104
Group number: 2542491-0100
Assembly Drawing: 2542491-1_1_AA

Pos	Part No	UN	Qty	Description	Page No
-					
010	2544303-0000		5	GASKET	
020	2542490-0000		1	LID	
030	2542492-0000		1	LID	
040	312109-0374		3	SCREW M6S ISO 4017 M6X30 A480	
050	315105-0153		3	WASHER BRB 6,4X12 RFR	

Pos	Part No	UN	Qty	Description	Page No

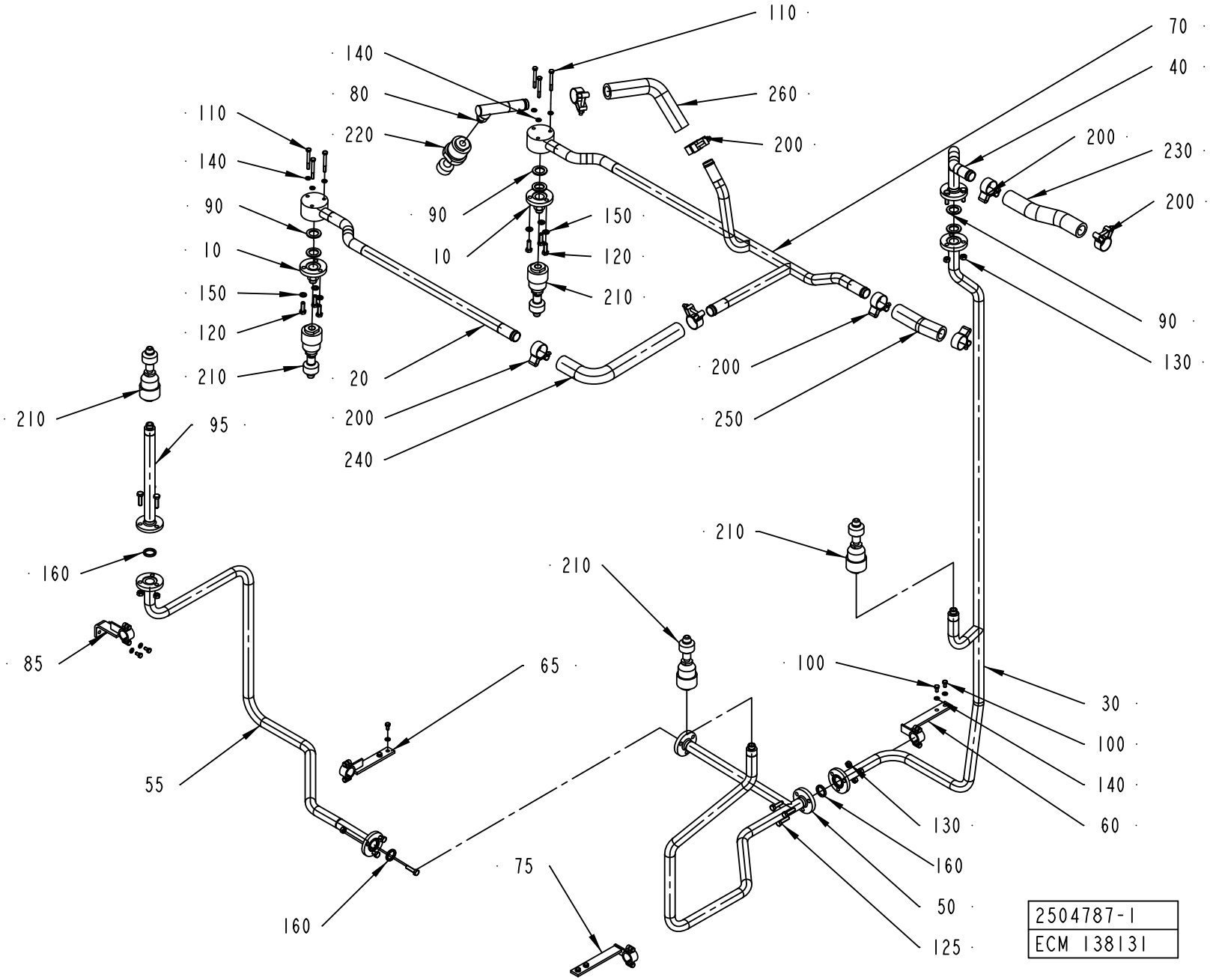
110
140
80
220
260
200
70
40
200
230
200
110
140
90
10
150
120
210
90
10
150
120
210
20
200
240
200
250
90
130
210
95
160
85
210
210
65
100
30
100
140
60
55
130
160
50
125
75
160
2504787-1
ECM 138131

ECM: 325199 - 20080101
Group number: 2504787-0100
Assembly Drawing: 2504787-1_1_AB

This list covers pages from 2-68 to 2-71

Pos	Part No	UN	Qty	Description	Page No
A3/FLEX TBA, A3/FLEX TPA (See drawing on page: 2-68)					
050	2508424-0000		1	PIPE	
075	2529111-0000		1	BRACKET	
210	90424-0066		5	ROT.SPRAY NOZZLE, D26984-B3/8"-PVDF/4.5	
230	90166-0233	MM	260	HOSE	
250	90166-0233	MM	175	HOSE	
A3/FLEX TGA (See drawing on page: 2-70)					
050	2892472-0000		1	PIPE	
075	2927686-0000		1	BRACKET	
210	90424-0066		6	ROT.SPRAY NOZZLE, D26984-B3/8"-PVDF/4.5	
230	90166-0233	MM	570	HOSE	
250	90166-0233	MM	520	HOSE	
Common Parts					
010	1511203-0000		2	PIPE	
020	2506653-0000		1	PIPE	
030	2506933-0000		1	PIPE	
040	2506934-0000		1	PIPE	
055	2529069-0000		1	PIPE	
060	2508427-0000		1	BRACKET	
065	2529110-0000		1	BRACKET	
070	2508428-0000		1	PIPE	
080	2510833-0000		1	PIPE	
085	2544213-0000		1	BRACKET	
090	1037443-0000		6	GASKET	
095	2544214-0000		1	PIPE	
100	312105-0366		8	SCREW M6S ISO 4017 M6X12 A480	
110	312105-0381		6	SCREW M6S ISO 4014 M6X55 A480	
120	312105-0453		6	SCREW M6S ISO 4017 M8X25 A480	
125	312105-0455		9	SCREW M6S ISO 4017 M8X30 A480	
130	312605-0318		12	HEXAGON NUT, M6M M8 A280	
140	315105-0153		14	WASHER BRB 6,4X12 RFR	
150	315105-0165		6	WASHER BRB 8,4X16 RFR	
160	315229-0103		3	GASKETS, 23,1X30,1X3,7 MM 1" FDA	
200	90459-2366		8	HOSE CLIP, (32)-35	
220	90424-0071		1	ROT.SPRAY NOZZLE, D40140-R3/8-PVDF 4.5	
240	90166-0233	MM	430	HOSE	
260	90166-0233	MM	300	HOSE	

Pos	Part No	UN	Qty	Description	Page No

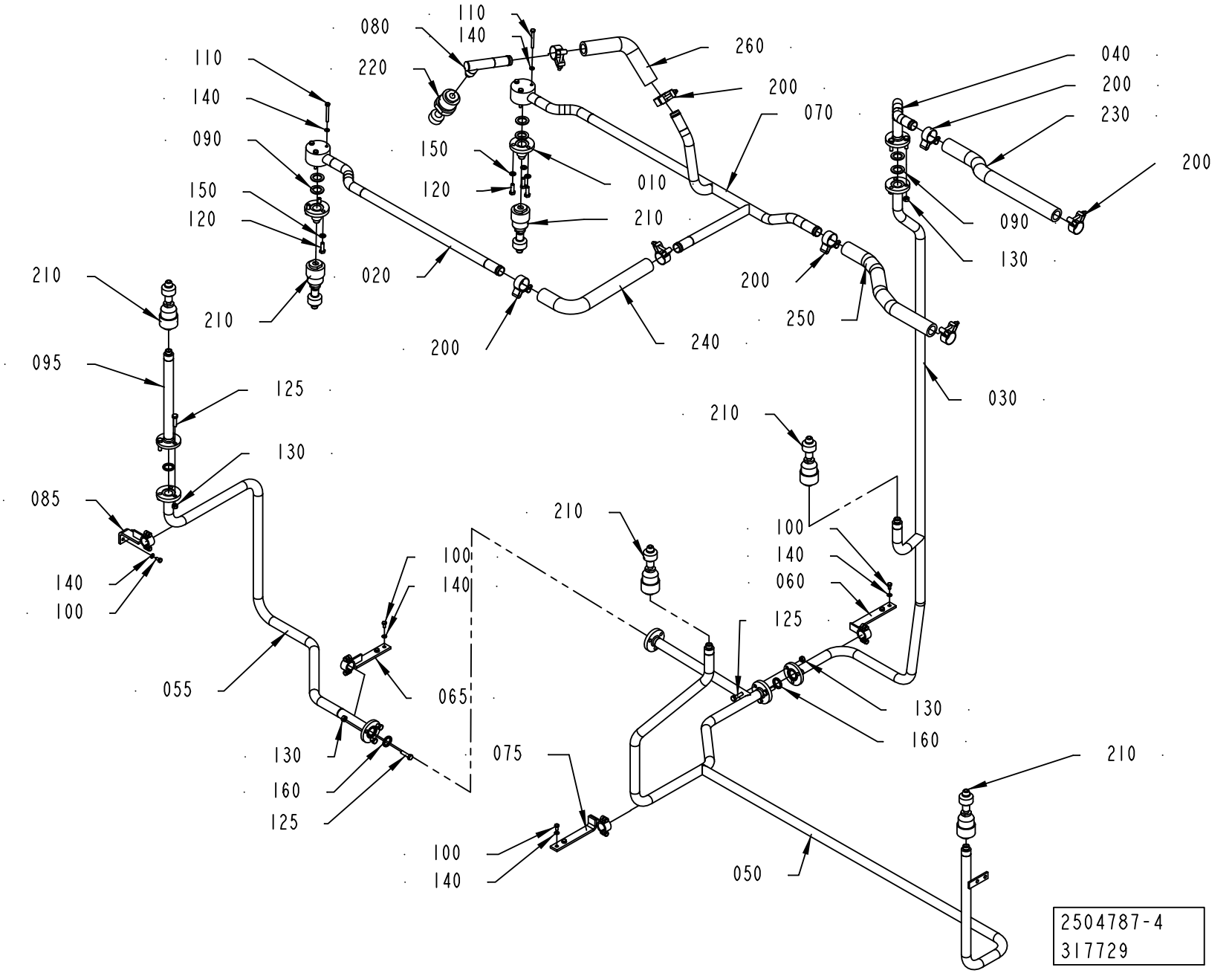
110
140
080
220
260
200
070
040
200
230
200
110
140
090
150
120
150
120
010
210
090
130
210
020
200
250
210
200
240
095
125
030
210
130
085
210
100
140
060
140
100
100
140
125
055
065
130
160
130
160
125
075
210
100
140
050
2504787-4
317729

ECM: 325199 - 20080101
Group number: 2504787-0100
Assembly Drawing: 2504787-4_1_AA

This list covers pages from 2-68 to 2-71

Pos	Part No	UN	Qty	Description	Page No
A3/FLEX TBA, A3/FLEX TPA (See drawing on page: 2-68)					
050	2508424-0000		1	PIPE	
075	2529111-0000		1	BRACKET	
210	90424-0066		5	ROT.SPRAY NOZZLE, D26984-B3/8"-PVDF/4.5	
230	90166-0233	MM	260	HOSE	
250	90166-0233	MM	175	HOSE	
A3/FLEX TGA (See drawing on page: 2-70)					
050	2892472-0000		1	PIPE	
075	2927686-0000		1	BRACKET	
210	90424-0066		6	ROT.SPRAY NOZZLE, D26984-B3/8"-PVDF/4.5	
230	90166-0233	MM	570	HOSE	
250	90166-0233	MM	520	HOSE	
Common Parts					
010	1511203-0000		2	PIPE	
020	2506653-0000		1	PIPE	
030	2506933-0000		1	PIPE	
040	2506934-0000		1	PIPE	
055	2529069-0000		1	PIPE	
060	2508427-0000		1	BRACKET	
065	2529110-0000		1	BRACKET	
070	2508428-0000		1	PIPE	
080	2510833-0000		1	PIPE	
085	2544213-0000		1	BRACKET	
090	1037443-0000		6	GASKET	
095	2544214-0000		1	PIPE	
100	312105-0366		8	SCREW M6S ISO 4017 M6X12 A480	
110	312105-0381		6	SCREW M6S ISO 4014 M6X55 A480	
120	312105-0453		6	SCREW M6S ISO 4017 M8X25 A480	
125	312105-0455		9	SCREW M6S ISO 4017 M8X30 A480	
130	312605-0318		12	HEXAGON NUT, M6M M8 A280	
140	315105-0153		14	WASHER BRB 6,4X12 RFR	
150	315105-0165		6	WASHER BRB 8,4X16 RFR	
160	315229-0103		3	GASKETS, 23,1X30,1X3,7 MM 1" FDA	
200	90459-2366		8	HOSE CLIP, (32)-35	
220	90424-0071		1	ROT.SPRAY NOZZLE, D40140-R3/8-PVDF 4.5	
240	90166-0233	MM	430	HOSE	
260	90166-0233	MM	300	HOSE	

Pos	Part No	UN	Qty	Description	Page No

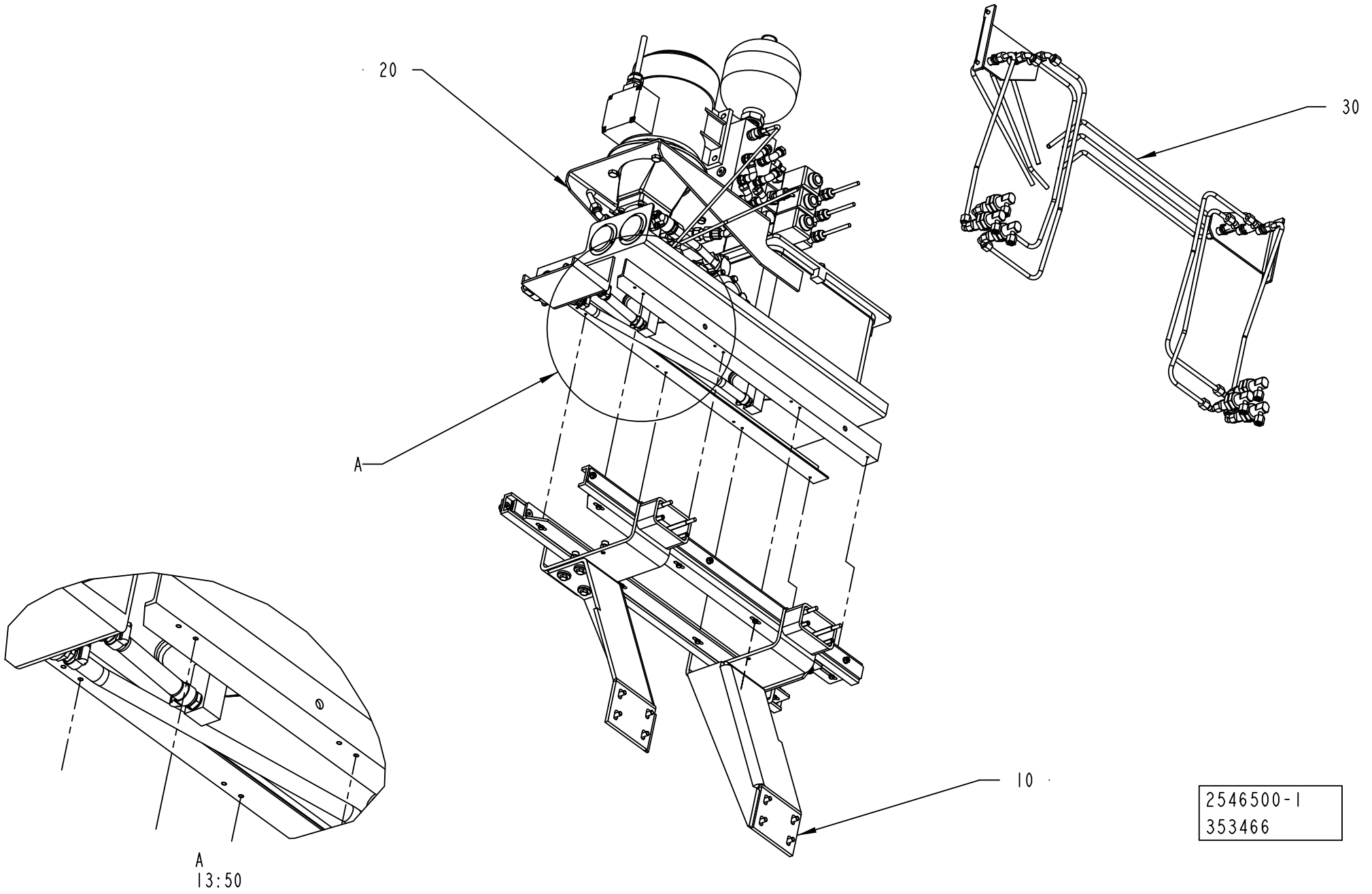
20
30
A
10
A
13:50
2546500-1
353466

ECM: 354186 - 20081001
Group number: 2546500-0100
Assembly Drawing: 2546500-1_1_AC

Pos	Part No	UN	Qty	Description	Page No
-					
005	2552001-0000		1	HYDRAULIC DIAGRAM	
010	2546499-0300		1	GUIDE	**2-75**
020	2558947-0200		1	HYDRAULIC UNIT	**2-77**
030	2520484-0100		1	PIPE WORK-HYDRAULIC	**2-85**

Pos	Part No	UN	Qty	Description	Page No

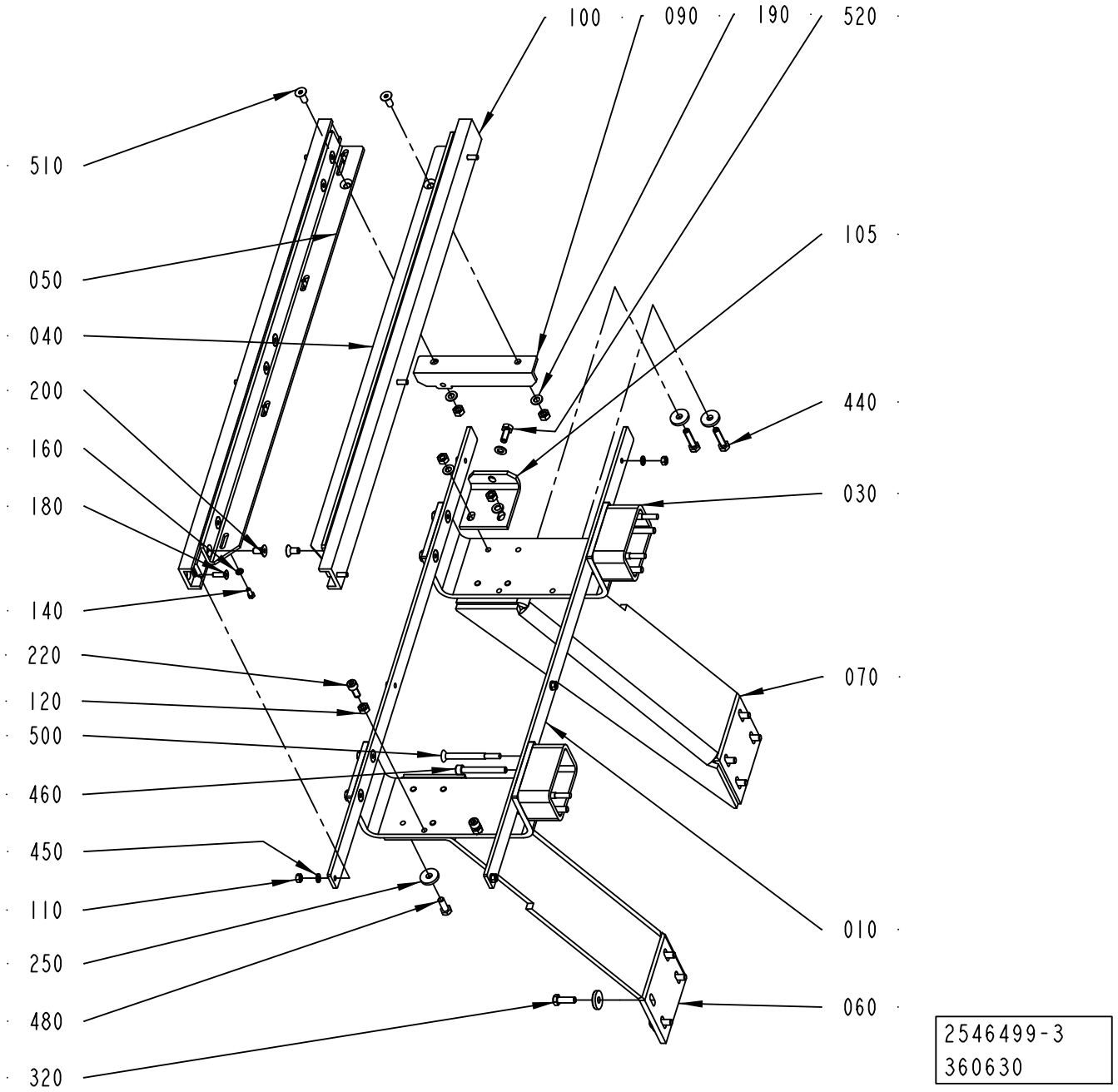
100
090
190
520
510
105
050
040
440
200
160
030
180
140
070
220
120
500
460
010
450
110
060
250
480
320
2546499-3
360630

ECM: 360630 - 20080625
Group number: 2546499-0300
Assembly Drawing: 2546499-3_1_AB

Pos	Part No	UN	Qty	Description	Page No
-					
010	2905300-0000		2	PLATE	
030	2907814-0000		2	BRACKET	
040	2905298-0000		1	ANGLE	
050	2905299-0000		1	ANGLE	
060	2686317-0000		1	SUPPORT	
070	2770115-0000		1	SUPPORT	
090	2905297-0000		1	ANGLE	
100	2891551-0000		2	GUIDE	
105	2978813-0000		1	ANGLE	
110	312605-0316		6	HEXAGON NUT, M6M M6 A280	
120	312605-0318		10	HEXAGON NUT, M6M M8 A280	
140	312105-0327		8	SCREW M6S ISO 4017 M5X12 A480	
160	315105-0146		8	WASHER BRB 5,3X10 RFR	
180	312155-0370		6	SCREW DIN 7991 MF6S M6X20 A4 70	
190	315105-0165		7	WASHER BRB 8,4X16 RFR	
200	312155-0449		12	SCREW DIN 7991 MF6S M8X16 A4 70	
220	312115-0451		2	SCREW ISO4762 M8X20 A4 80	
250	315125-0165		10	WASHER TBRSB 8,4X26X5 A4	
320	312105-0453		8	SCREW M6S ISO 4017 M8X25 A480	
440	312105-0457		2	SCREW M6S ISO 4014 M8X35 A480	
440	315125-0165		6	WASHER TBRSB 8,4X26X5 A4	
450	315106-0153		6	WASHER ISO 7089-6-200 HV A4	
460	312115-0464		4	SCREW ISO4762 M8X65 A4 80	
480	312105-0452		6	SCREW M6S ISO 4017 M8X22 A480	
500	90287-0264		4	SCREW	
510	312155-0451		6	SCREW DIN 7991 MF6S M8X20 A4 70	
520	312105-0451		1	SCREW M6S ISO 4017 M8X20 A480	

Pos	Part No	UN	Qty	Description	Page No

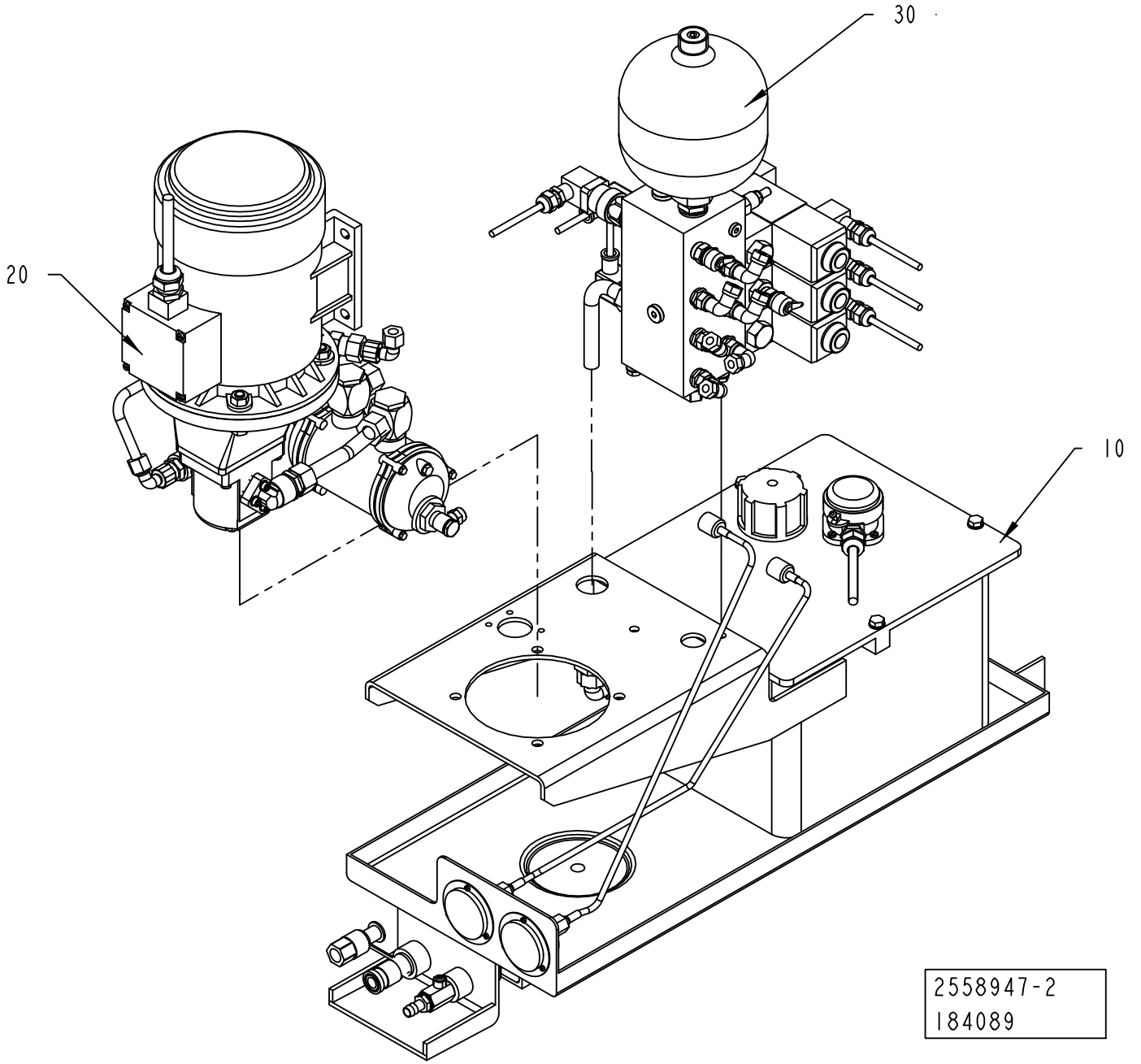
30
20
10
2558947-2
184089

ECM: 192979 - 20050620
Group number: 2558947-0200
Assembly Drawing: 2558947-2_1_AA

Pos	Part No	UN	Qty	Description	Page No
-					
010	2558845-0200		1	TANK	**2-79**
020	2558930-0100		1	PUMP	**2-81**
030	2559111-0200		1	HYDRAULIC VALVE	**2-83**

Pos	Part No	UN	Qty	Description	Page No

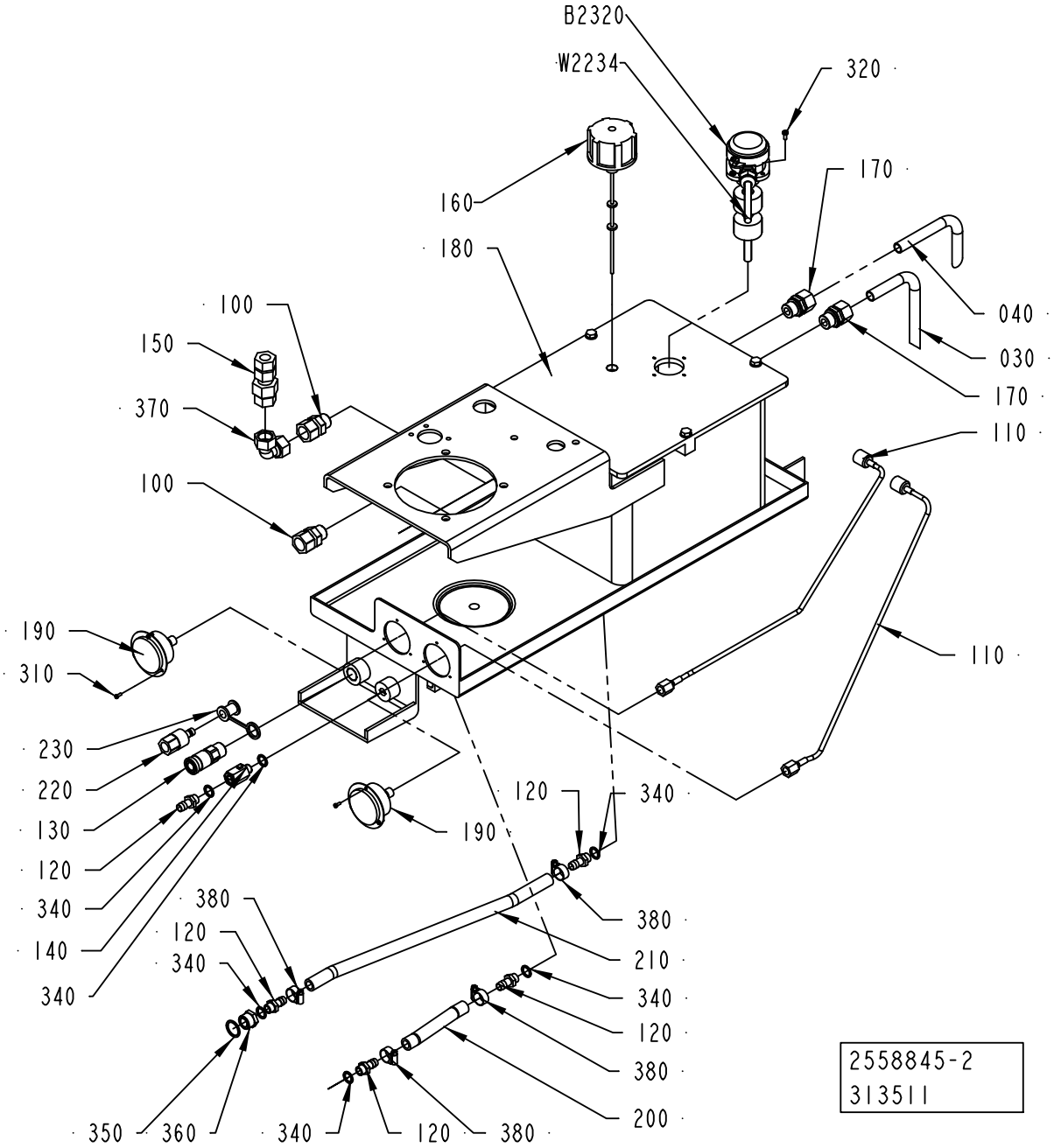
B2320
W2234
320
160
170
180
040
030
100
150
370
170
110
100
190
310
110
230
220
130
120
340
140
340
120
340
190
380
120
340
380
210
340
120
380
200
350
360
340
120
380
2558845-2
313511

ECM: 313511 - 20080402
Group number: 2558845-0200
Assembly Drawing: 2558845-2_1_AB

Pos	Part No	UN	Qty	Description	Page No
-					
030	2569036-0000		1	PIPE	
040	2569037-0000		1	PIPE	
100	90030-0567		2	CONN. STR., 15-R1/2, EXT. THREAD	
110	90148-0101		2	MEASURING HOSE,MINIMESS S110-AC-FA-0063	
120	90163-0052		5	HOSE NIPPLE, EXT.THR. 1/4-12 MM	
130	90163-0076		1	QUICK COUPLING, (F) LP-006-0-WR021	
140	90600-0775		1	BALL VALVE G1/4, 406F-1/4"	
150	90230-0023		1	NON-RETURN VALVE	
160	90277-0086		1	AIR FILTER, UC-SAB-5101 + UC-DIP-206	
170	90457-0035		2	REDUCING UNIUN	
180	90459-5635		1	HYDRAULIC TANK, 12 L, A1-19101+A3-16783	
190	90459-1223		2	PRESSURE GAUGE HYDRAULIC, 1184954.03-11	
200	90166-0121	MM	130	HOSE	
210	90166-0121	MM	440	HOSE	
220	90163-0064		1	QUICK COUPLING, (M) LP-006-2-WR517	
230	90163-0304		1	QUICK COUPLING, LP-006-5-74-KU (DUST CAP	
310	312125-0222		6	SCREW ISO 1207 M3X8 A4	
320	312132-0289		4	SLOTTED HEAD, PAN SCREW, MSCS M4X10	
340	315234-0110		6	WASHER,PL.RND.CU.13,5/18 H=1,5	
350	315234-0113		1	WASHER PL.RND.CU.21,3//26 H=1,5	
360	342701-0205		1	BUSHING,INT./EXT.G-THREAD G1/2"-G1/4"	
370	342744-0114		1	CONN. ELBOW ADJ.,INT 15	
380	342991-0102		4	HOSE CLIP,WORM DRIVE TYPE (16)-19	
B2320	90457-0019		1	LEVEL PROBE, HMFB-S=45-0=80-0=90-T70	
W2234	351150-0406	M	4	CABLE OLFLEX 7X0,75 MM2 LIGHT/GREY	

Pos	Part No	UN	Qty	Description	Page No

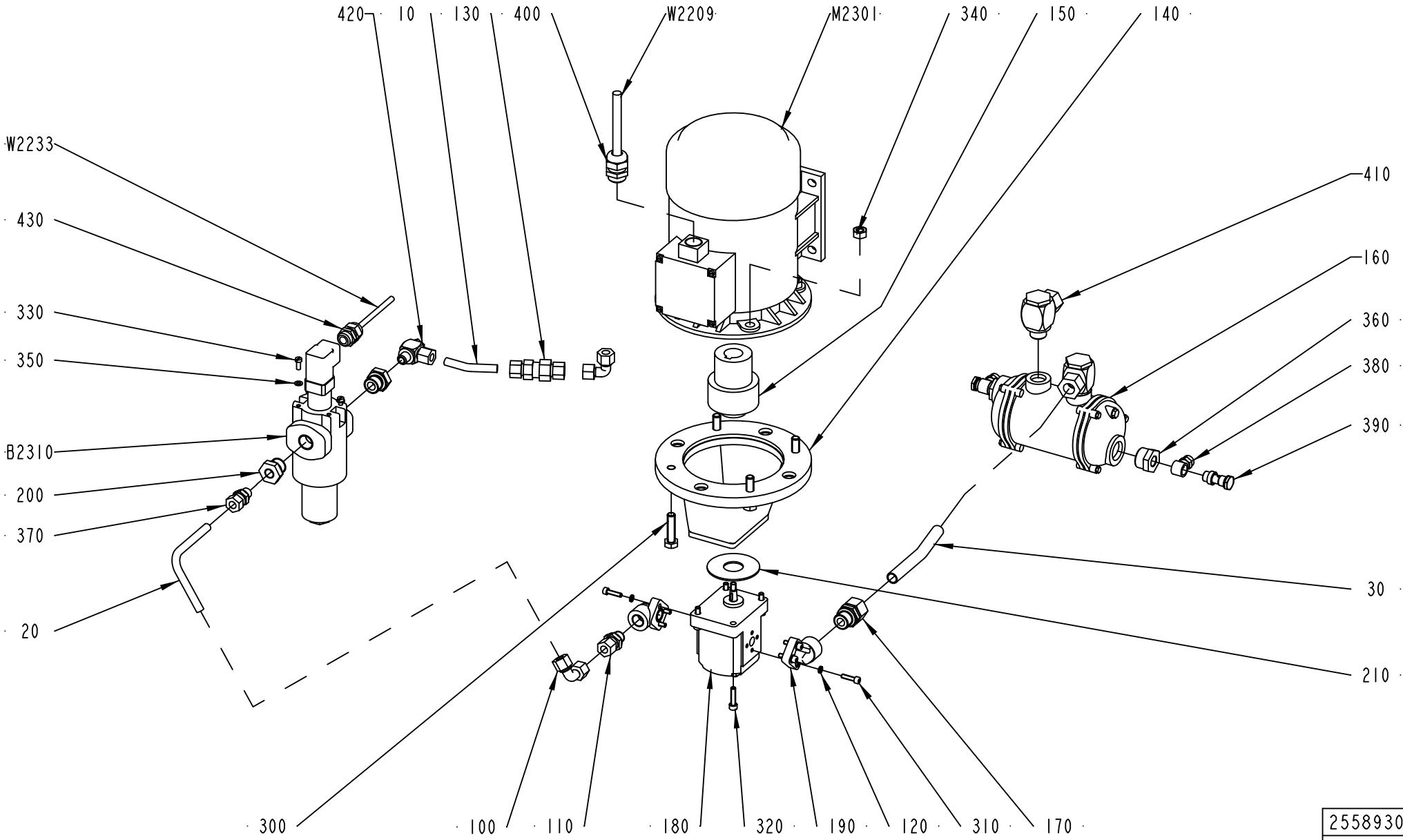

2558930-1
ECM 118242

ECM: 383489 - 20090115
Group number: 2558930-0100
Assembly Drawing: 2558930-1_1_AA

Pos	Part No	UN	Qty	Description	Page No
-					
010	2569035-0000		1	PIPE	
020	2569038-0000		1	PIPE	
030	2569039-0000		1	PIPE	
100	90030-0121		2	CONN. ELBOW ADJ.,INT 10	
110	90030-0157		1	CONN. STR. 10-R3/8, EXT. THREAD	
120	90062-0029		6	LOCK WASHER 5,1X 8,6, T= 1,5 DIN 7980	
130	90230-0017		1	NON-RETURN VALVE RHD 10-L	
140	90321-0574		1	PUMP BRACKET LSE-201	
150	90321-0575		1	SHAFT COUPLING, 24 MM	
160	90422-0008		1	COOLER	
	315202-0612		*1*	*O-RING 75,79X3,53 MM*	
170	90457-0035		1	REDUCING UNIUN	
180	90457-0037		1	HYDR. PUMP TFP100 3/8-S-C001	
190	90457-0039		2	PUMP CONN. ELBOW FLANGE T-26/12-3/8	
200	90457-0043		2	BUSHING, INT/EXT. G-THREAD NO. 1/2-1/4	
210	90457-0046		1	WASHER PLAIN ROUND 25,4/67,5, H=2	
300	312109-0499		4	SCREW M6S ISO 4017 M10X40 A480	
310	312115-0331		6	SCREW ISO4762 M5X20 A4 80	
320	312115-0372		4	SCREW ISO4762 M6X25 A4 80	
330	312125-0327		3	SCREW ISO 1207 M5X12 A4	
340	312605-0320		4	HEXAGON NUT, M6M M10 A280	
350	315105-0146		3	WASHER BRB 5,3X10 RFR	
360	342701-0208		2	BUSHING, INT/EXT. G-THREAD NO. 3/4-1/4	
370	342752-0104		1	CONN. STR. GA-10-G1/4	
380	342980-0122		2	BANJO-CONNECTION,RING 8/6-G1/4 INCH	
390	342980-0304		2	BANJO-HOLLOW BOLT COUPL,EXT.THR.01-G1/4	
400	352103-0111		1	CABLE GLAND, ST 16, PR22,5/PG16	
410	342796-0114		2	CONN. BANJO,WH 15-G1/2	
420	342796-0108		1	CONN. BANJO,WH 10-G1/4	
430	352103-0106		1	CABLE GLAND, ST 11, PR18,6/PG11	
B2310	90459-1224		1	FILTER UNIT, MDF-BNHC-30-LB10-C1.0/B6	
010	*90415-0069*		*1*	*FILT. CLOGG.INDICAT. / 36015000 VM-5-C.0*	
020	*90457-0042*		*1*	*FILTER 10 MICRON, 0030-D-010-BN4HC*	
030	*315202-0510*		*1*	*O-RING 12,37X2,62 MM*	
040	*90600-4477*		*1*	*O-RING 40X2 MM*	
M2301	90457-0036		1	3-PHASE MOTOR,FOOT MOUNT.1,1KW,1410 RPM	
W2209	351150-0418	M	4	CABLE OLFLEX 4X2,5 MM2 LIGHT/GREY	
W2233	351150-0403	M	4	CABLE OLFLEX 3X0,75 MM2 LIGHT/GREY	

Pos	Part No	UN	Qty	Description	Page No

Machine Type | Group Description | Used-In | Group Number | Page No

HYDRAULIC VALVE

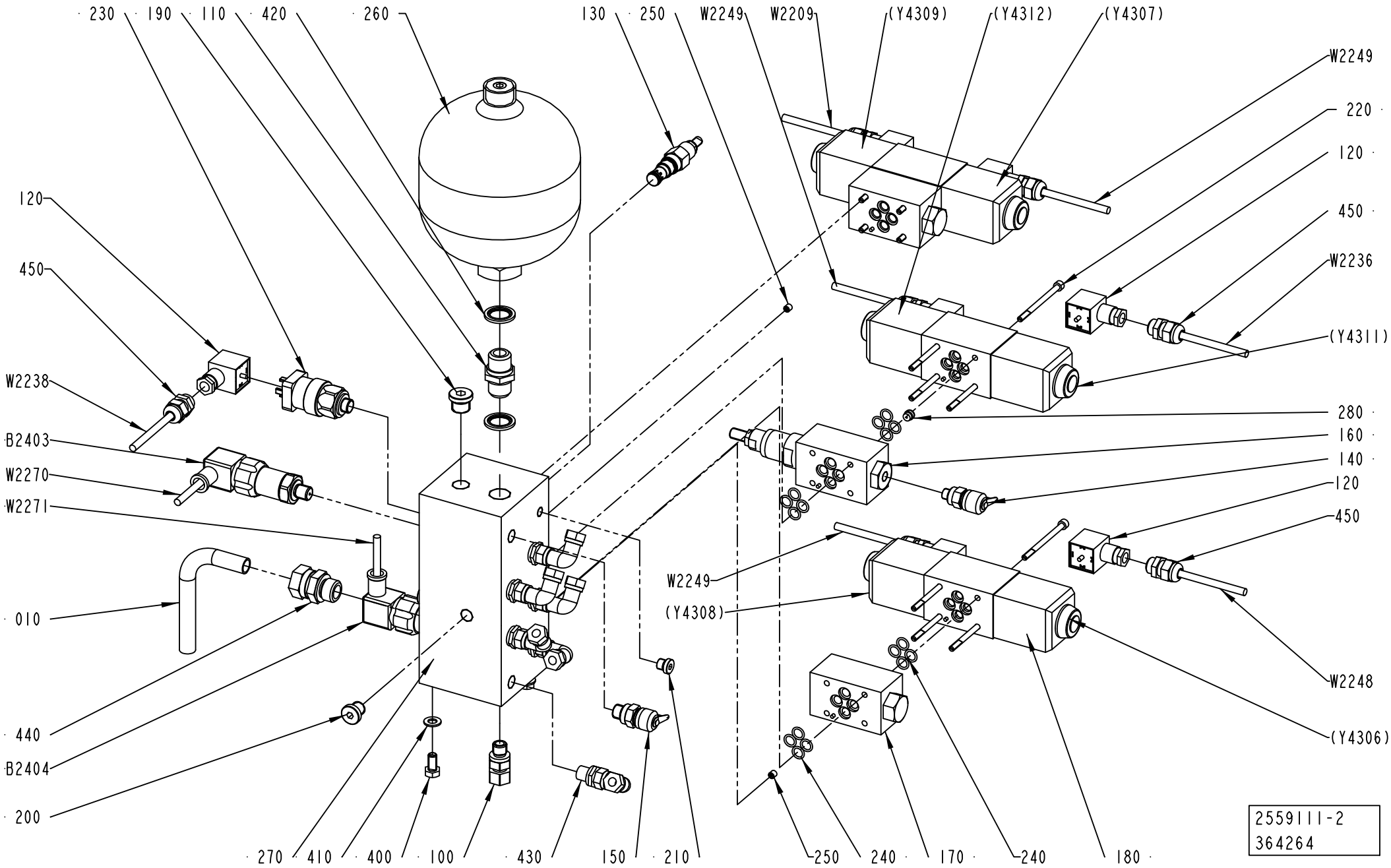

ECM: 370541 - 20090101
Group number: 2559111-0200
Assembly Drawing: 2559111-2_1_AC

Pos	Part No	UN	Qty	Description	Page No
-					
010	2569034-0000		1	PIPE	
100	90030-0178		1	CONN. STR., 10-R1/4, EXT. THREAD	
110	90030-0340		1	NIPPLES, EXT. THREAD, HEXAGON, RA-G1/2A3	
120	90110-0095		7	CONNECTOR 3 POLE + EARTH	
130	90201-0131		1	VALVE	
140	90201-0132		1	VALVE	
150	90201-0133		1	VALVE	
160	90201-0135		1	PRESSURE REDUCING VALVE	
170	90201-0136		2	DIRECT CHECK VALVE, NO. DGMDC-3-Y-PK-41	
180	90459-1690		3	DIRECTIONAL VALVE, DG4V-3-6C-MUH-7-60-EN	
190	90201-0448		1	PLUG	
200	90201-0449		4	PLUG	
210	90201-0450		1	PLUG	
220	90201-0407		3	BOLT KIT REMPLAZA AL 90201-0456	
230	90274-0124		1	PRESSURE SWITCH	
240	90457-0134		24	O-RING	
250	90457-0177		2	FLOW-RESTRICTOR, 2,0 MM, M6	
260	90459-4032		1	HYDR.ACC., SBO-210-1.4E1/112U-210AK	
270	90459-1227		1	MANIFOLD BLOCK, A1-17351	
280	90457-0020		1	FLOW RESTRICTOR 1,5 MM, NO 694346	
400	312105-0449		2	SCREW M6S ISO 4017 M8X16 A480	
410	315105-0165		2	WASHER BRB 8,4X16 RFR	
420	315211-0111		2	BONDED SEAL SS/NBR90 G1/2	
430	342738-0208		6	ADJUSTABLE ELBOW CONNECTION,EXT 8-G1/4	
440	342752-0114		1	CONN. STR. GA-15-G1/2	
450	352103-0101		7	CABLE GLAND, ST 9, PR15,2/PG9	
B2403	90459-1038		1	PRESSURE TRANSMITTER, 250BAR	
B2404	90459-1038		1	PRESSURE TRANSMITTER, 250BAR	
W2208	351150-0403	M	4	CABLE OLFLEX 3X0,75 MM2 LIGHT/GREY	
W2209	351150-0403	M	4	CABLE OLFLEX 3X0,75 MM2 LIGHT/GREY	
W2236	351150-0403	M	4	CABLE OLFLEX 3X0,75 MM2 LIGHT/GREY	
W2237	351150-0403	M	4	CABLE OLFLEX 3X0,75 MM2 LIGHT/GREY	
W2238	351150-0403	M	4	CABLE OLFLEX 3X0,75 MM2 LIGHT/GREY	
W2248	351150-0403	M	4	CABLE OLFLEX 3X0,75 MM2 LIGHT/GREY	
W2249	351150-0403	M	4	CABLE OLFLEX 3X0,75 MM2 LIGHT/GREY	
W2270	90220-0091	M	4	PAIR TWISTED CABLE 2X2X0,25MM2	
W2271	90220-0091	M	4	PAIR TWISTED CABLE 2X2X0,25MM2	

Pos	Part No	UN	Qty	Description	Page No

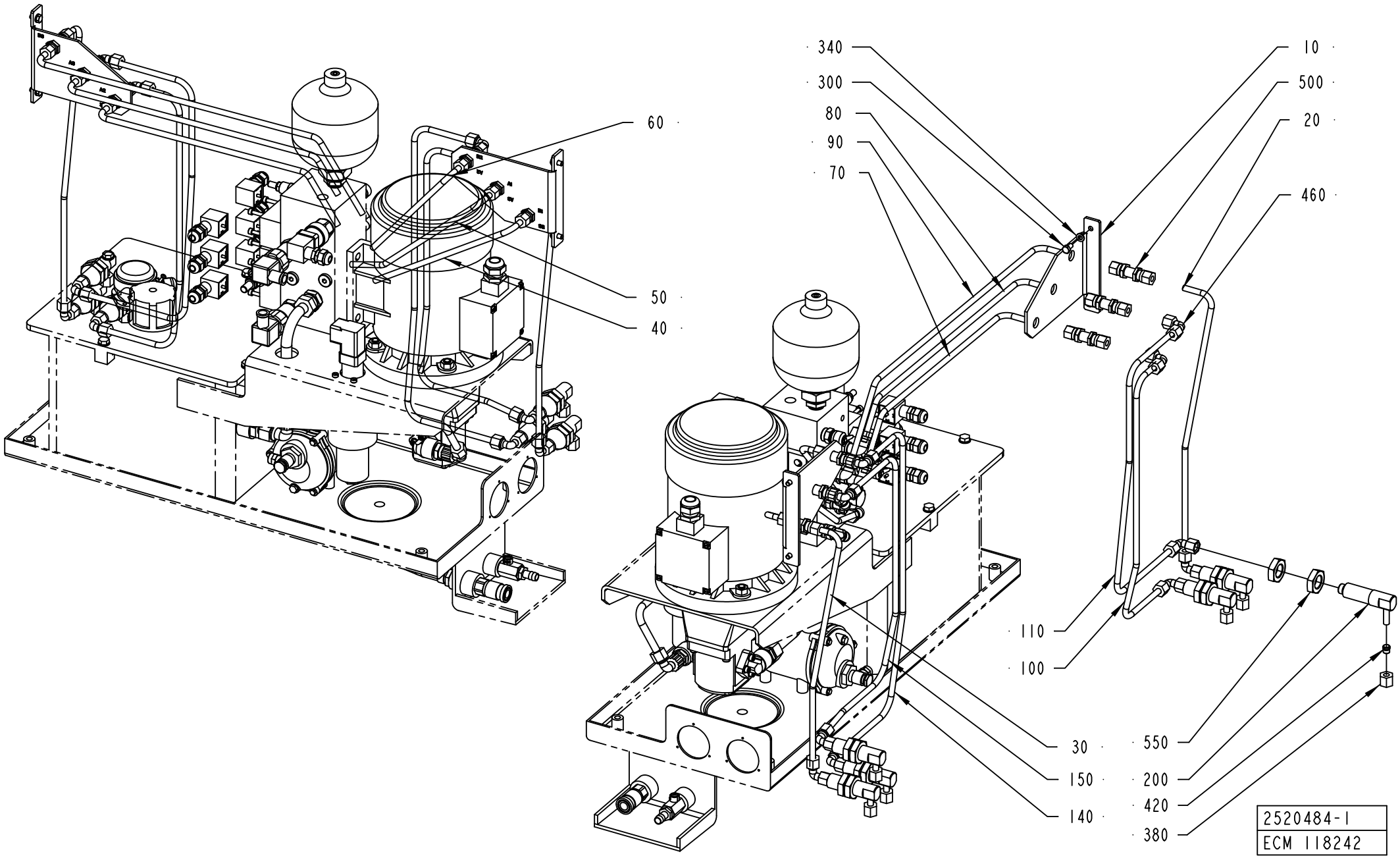
340
300
80
90
70
10
500
20
460
60
50
40
110
100
30
150
140
550
200
420
380
2520484-1
ECM 118242

ECM: 189761 - 20041104
Group number: 2520484-0100
Assembly Drawing: 2520484-1_1_AA

Pos	Part No	UN	Qty	Description	Page No
-					
010	2527525-0000		2	BRACKET	
020	2559310-0000		1	HYDRAULIC PIPE	
030	2559311-0000		1	HYDRAULIC PIPE	
040	2531238-0000		1	HYDRAULIC PIPE	
050	2531237-0000		1	HYDRAULIC PIPE	
060	2531236-0000		1	HYDRAULIC PIPE	
070	2531235-0000		1	HYDRAULIC PIPE	
080	2531234-0000		1	HYDRAULIC PIPE	
090	2531233-0000		1	HYDRAULIC PIPE	
100	2529178-0000		1	HYDRAULIC PIPE	
110	2529179-0000		1	HYDRAULIC PIPE	
140	2529182-0000		1	HYDRAULIC PIPE	
150	2529183-0000		1	HYDRAULIC PIPE	
200	540718-0000		6	ELBOW PIPE JOINT	
300	312105-0366		4	SCREW M6S ISO 4017 M6X12 A480	
340	315105-0153		4	WASHER BRB 6,4X12 RFR	
380	342703-0208		6	NUT, PIPES & CONNECTORS,NUT M-8 SS	
420	90030-0098		6	ACCESSORIES, FERRULE 8	
460	342738-0208		10	ADJUSTABLE ELBOW CONNECTION,EXT 8-G1/4	
500	90030-0067		6	CONN. BULKHEAD SV 8-L/SY	
550	90330-0093		12	NUT, HEXAGON, G1/2	

Pos	Part No	UN	Qty	Description	Page No

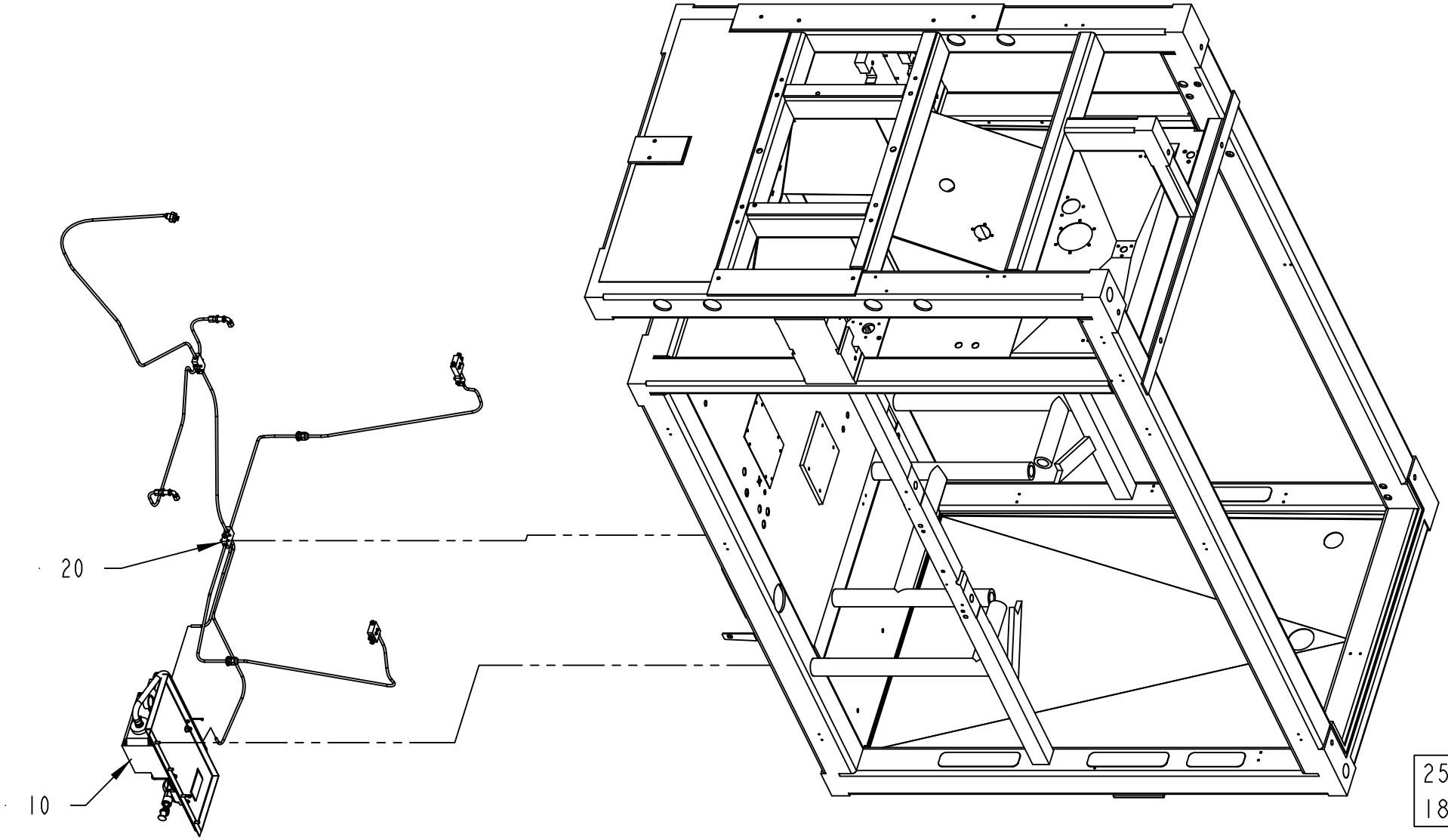
20
10
2529167-2
184089

ECM: 195317 - 20050620
Group number: 2529167-0200
Assembly Drawing: 2529167-2_1_AA

Pos	Part No	UN	Qty	Description	Page No
-					
010	2506776-0200		1	CENTRAL LUBRICATION	**2-89**
020	2504789-0100		1	LUBRICATION UNIT	**2-91**

Pos	Part No	UN	Qty	Description	Page No

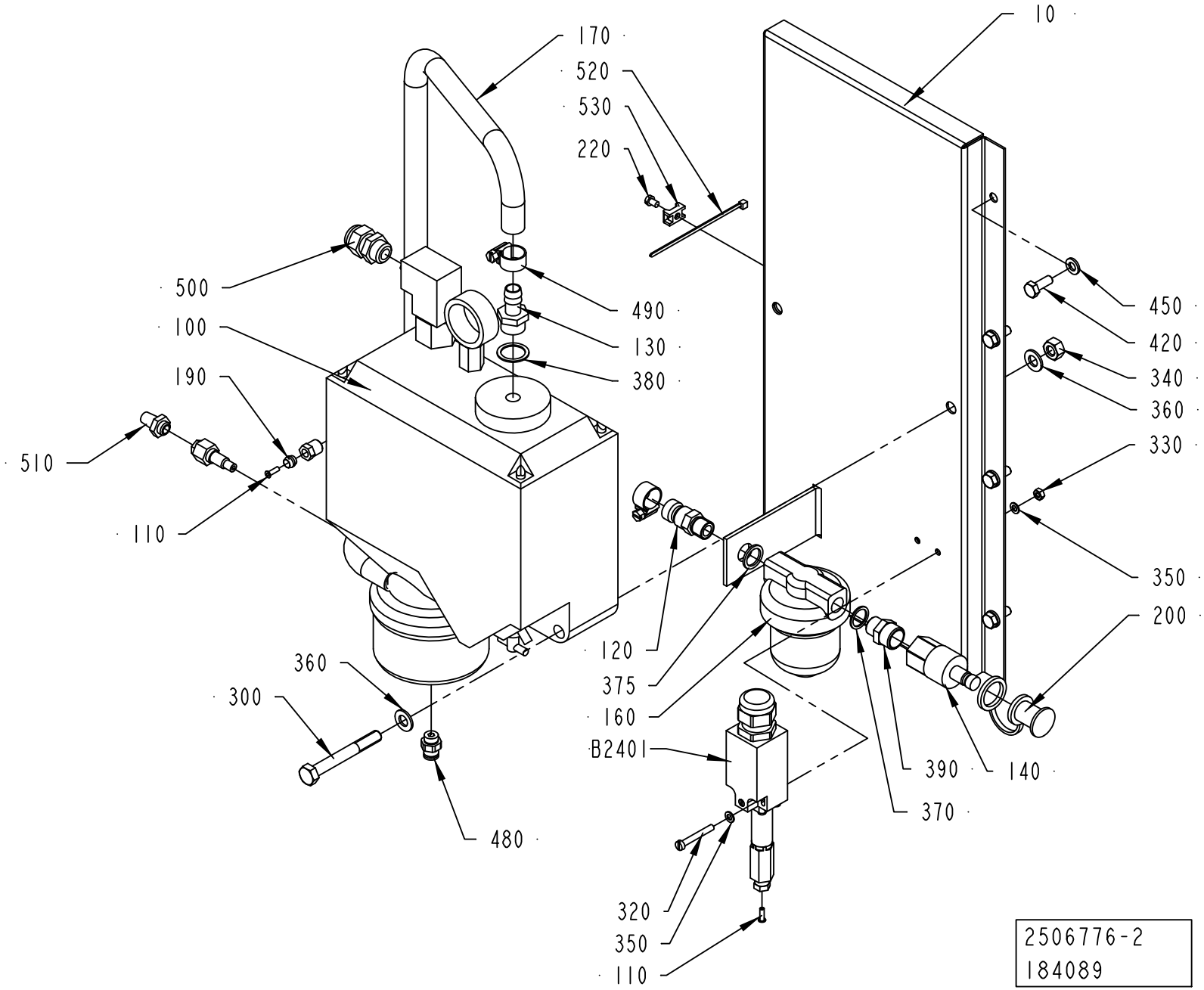
10
170
520
530
220
500
100
190
510
110
490
130
380
450
420
340
360
330
350
200
120
375
160
B2401
360
300
480
390
140
370
320
350
110
2506776-2
184089

ECM: 340461 - 20080403
Group number: 2506776-0200
Assembly Drawing: 2506776-2_1_AA

Pos	Part No	UN	Qty	Description	Page No
-					
010	2688066-0000		1	MOUNTING SHEET	
100	90048-0037		1	OIL PUMP INCL. CONTAINER 1,5 L	
110	90134-0030		2	SLEEVE FOR PLASTIC TUBE	
120	90163-0014		1	QUICK COUPLING, (M) LP-006-1-WR013	
130	90163-0041		1	HOSE NIPPLE, EXT.THR. 3/8-12 MM	
140	90163-0064		1	QUICK COUPLING, (M) LP-006-2-WR517	
160	90415-0033		1	OIL FILTER REFILLING UC-HP-1229-25	
	90415-0330		*1*	*FILTER INSERT ART.NO. HR-1229-25UCC*	
170	90166-0113	MM	850	HOSE	
190	90028-0022		1	CONE TUBE 6 MM	
200	90163-0304		1	QUICK COUPLING, LP-006-5-74-KU (DUST CAP	
220	312125-0285		1	SCREW ISO 1207 M4X6 A4	
300	312105-0464		2	SCREW M6S ISO 4014 M8X65 A480	
320	312125-0299		2	SCREW ISO 1207 M4X30 A4	
330	312605-0312		2	HEXAGON NUT, M6M M4 A280	
340	312605-0318		2	HEXAGON NUT, M6M M8 A280	
350	315105-0136		4	WASHER BRB 4,3X8 RFR	
360	315105-0165		4	WASHER BRB 8,4X16 RFR	
370	315233-0110		1	WASHER CAPTIVE SEALING G1/4	
375	315237-0110		1	WASHER,PL.RND.AL.13,5/18,H=1,5	
380	315233-0111		1	WASHER CAPTIVE SEALING G3/8	
390	342700-0203		1	NIPPLES,HEXAGON,EXT.G-THREAD G3/8"-G1/4"	
420	312105-0368		4	SCREW M6S ISO 4017 M6X16 A480	
450	315105-0153		4	WASHER BRB 6,4X12 RFR	
480	342722-0202		1	PIPE COUPLING 1/8" D=6MM	
490	342991-0101		2	HOSE CLIP,WORM DRIVE TYPE (13)-16	
500	352103-0101		1	CABLE GLAND, ST 9, PR15,2/PG9	
510	346800-0109		1	SILENCER FILTER R1/8"	
520	352113-0101		1	CABLE TIE, BLACK 92X2,5 MM	
530	352113-0205		1	ANCHOR PLATES FOR STRIPS, TYPE TM2S8-C10	
B2401	90274-0084		1	PRESSURE GUARD, 1800 KPA	

Pos	Part No	UN	Qty	Description	Page No

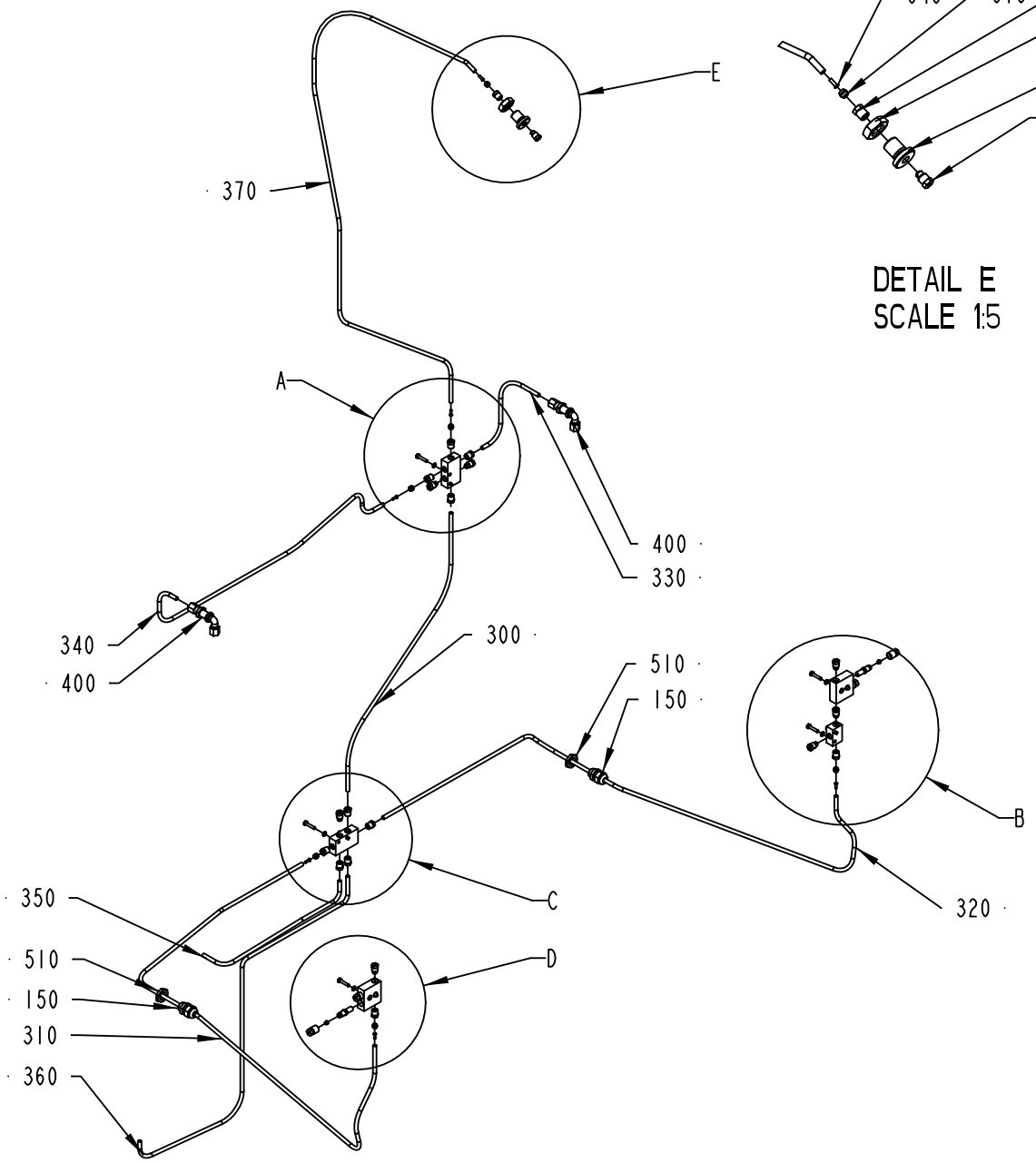

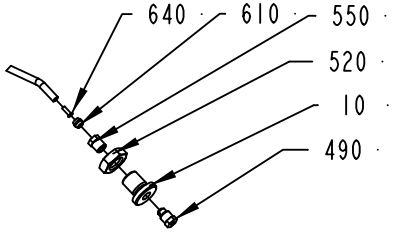

DETAIL E
SCALE 1:5

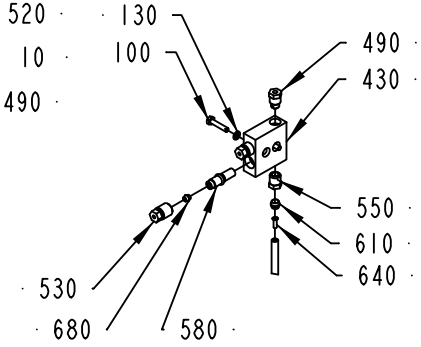

DETAIL D
SCALE 1:5

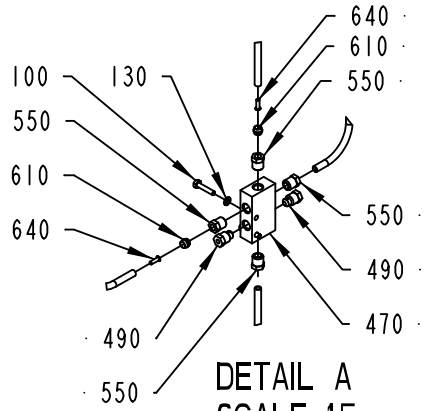

DETAIL A
SCALE 1:5

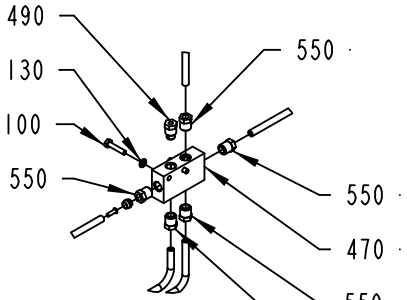

DETAIL C
SCALE 1:5

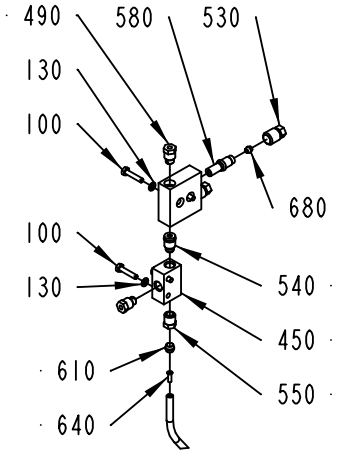

DETAIL B
SCALE 1:5

2504789-1
184089

ECM: 340457 - 20080403
Group number: 2504789-0100
Assembly Drawing: 2504789-1_1_AB

Pos	Part No	UN	Qty	Description	Page No
-					
010	2662012-0000		1	NIPPLE	
100	312105-0295		10	SCREW M6S ISO 4017 M4X20 A470	
130	315105-0136		10	WASHER BRB 4,3X8 RFR	
150	352103-0101		2	CABLE GLAND, ST 9, PR15,2/PG9	
300	90166-0108	MM	550	TUBE 6 MM PA TRANSP.	
310	90166-0108	MM	1700	TUBE 6 MM PA TRANSP.	
320	90166-0108	MM	1100	TUBE 6 MM PA TRANSP.	
330	90166-0108	MM	400	TUBE 6 MM PA TRANSP.	
340	90166-0108	MM	1000	TUBE 6 MM PA TRANSP.	
350	90166-0108	MM	500	TUBE 6 MM PA TRANSP.	
360	90166-0108	MM	1000	TUBE 6 MM PA TRANSP.	
370	90166-0108	MM	1800	TUBE 6 MM PA TRANSP.	
400	90030-0219		2	CONN. ELBOW BULKHEAD WSV 6	
430	90032-0038		2	BLOCK 2 WAYS	
450	90032-0043		1	DISTRIBUTION BLOCK 3 WAYS	
470	90032-0046		2	DISTRIBUTION BLOCK 6 WAYS	
490	90087-0019		7	PLUG M10X1 STAINLESS	
510	90099-0104		2	NUT, PR 15,2 (PG9)	
520	90099-0131		1	NUT HEX. M16X2 SS	
530	90134-0040		4	BUSHING VALVE CONNECTION 4 MM	
540	90134-0054		1	BLOCK CONNECTION M10X1	
550	90134-0055		12	BUSHING/NUT INLET/OUTLET 6 MM	
580	90092-0053		4	METERING VALVE 30 MM3	
610	90028-0022		12	CONE TUBE 6 MM	
640	90134-0030		12	SLEEVE FOR PLASTIC TUBE	
680	90028-0021		4	CONE TUBE 4 MM	

Pos	Part No	UN	Qty	Description	Page No

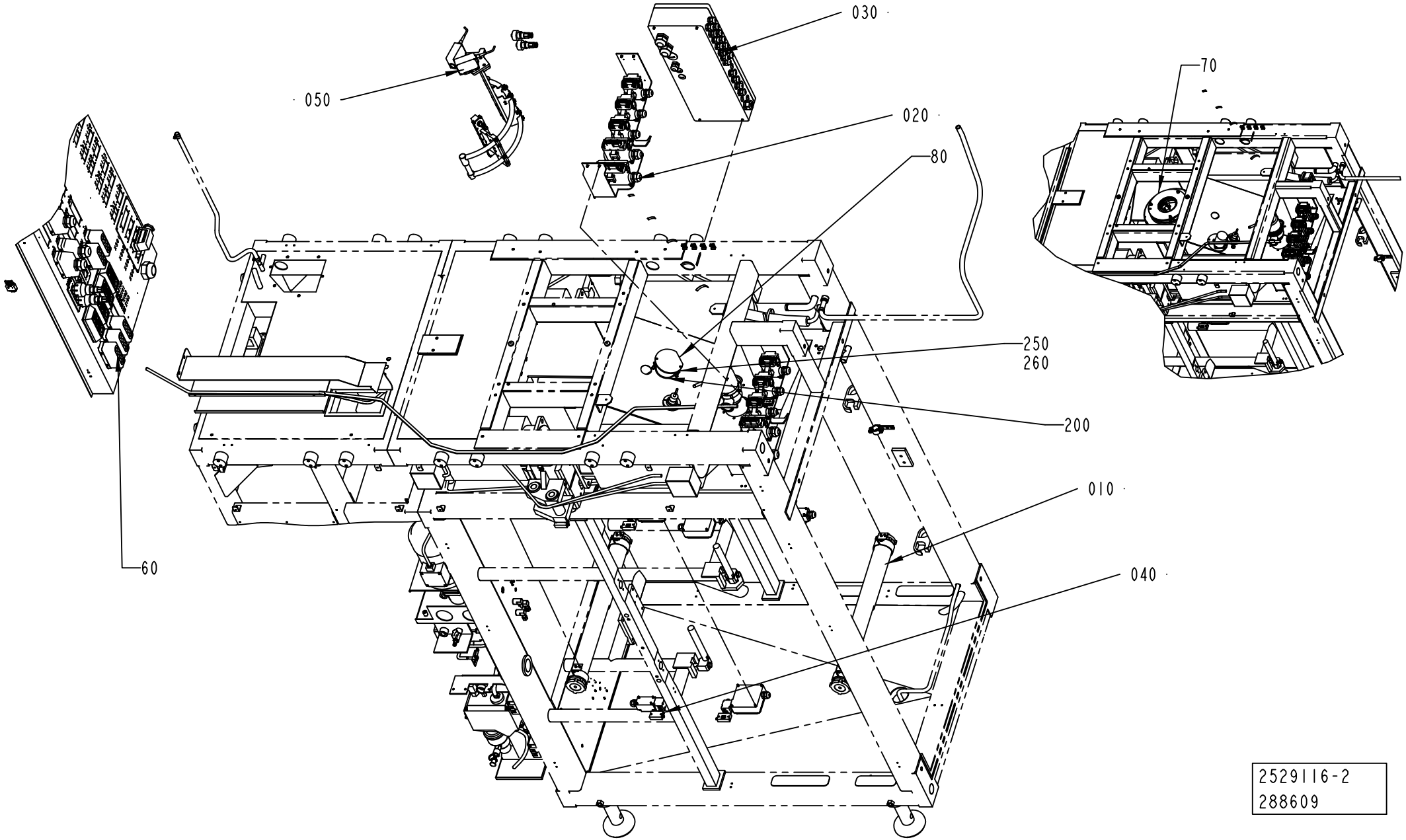
030
050
020
70
80
250
260
200
010
60
040
2529116-2
288609

ECM: 340465 - 20080403
Group number: 2529116-0150
Assembly Drawing: 2529116-2_1_AB

Pos	Part No	UN	Qty	Description	Page No
A3/FLEX TBA, A3/FLEX TPA					
080	2869815-0000		1	LID	
200	315202-0612		1	O-RING 75,79X3,53 MM	
250	312105-0368		2	SCREW M6S ISO 4017 M6X16 A480	
260	315105-0153		2	WASHER BRB 6,4X12 RFR	
A3/FLEX TGA					
070	2832868-0100		1	STEERING DEVICE	**2-95**
Common Parts					
010	2504790-0100		2	LIGHT FIXTURE	**2-97**
020	2506796-0100		1	CABLE CONNECTION	**2-99, 2-101**
030	2527252-0100		1	CONNECTION BOX	**2-103**
040	2529117-0100		1	DOOR SAFETY SWITCH	**2-105**
050	1523216-0200		1	LEVEL CONTROL DEVICE	**2-107**
060	2529410-0150		1	CABLE HARNESS	**2-117, 2-119, 2-121, 2-123**

Pos	Part No	UN	Qty	Description	Page No

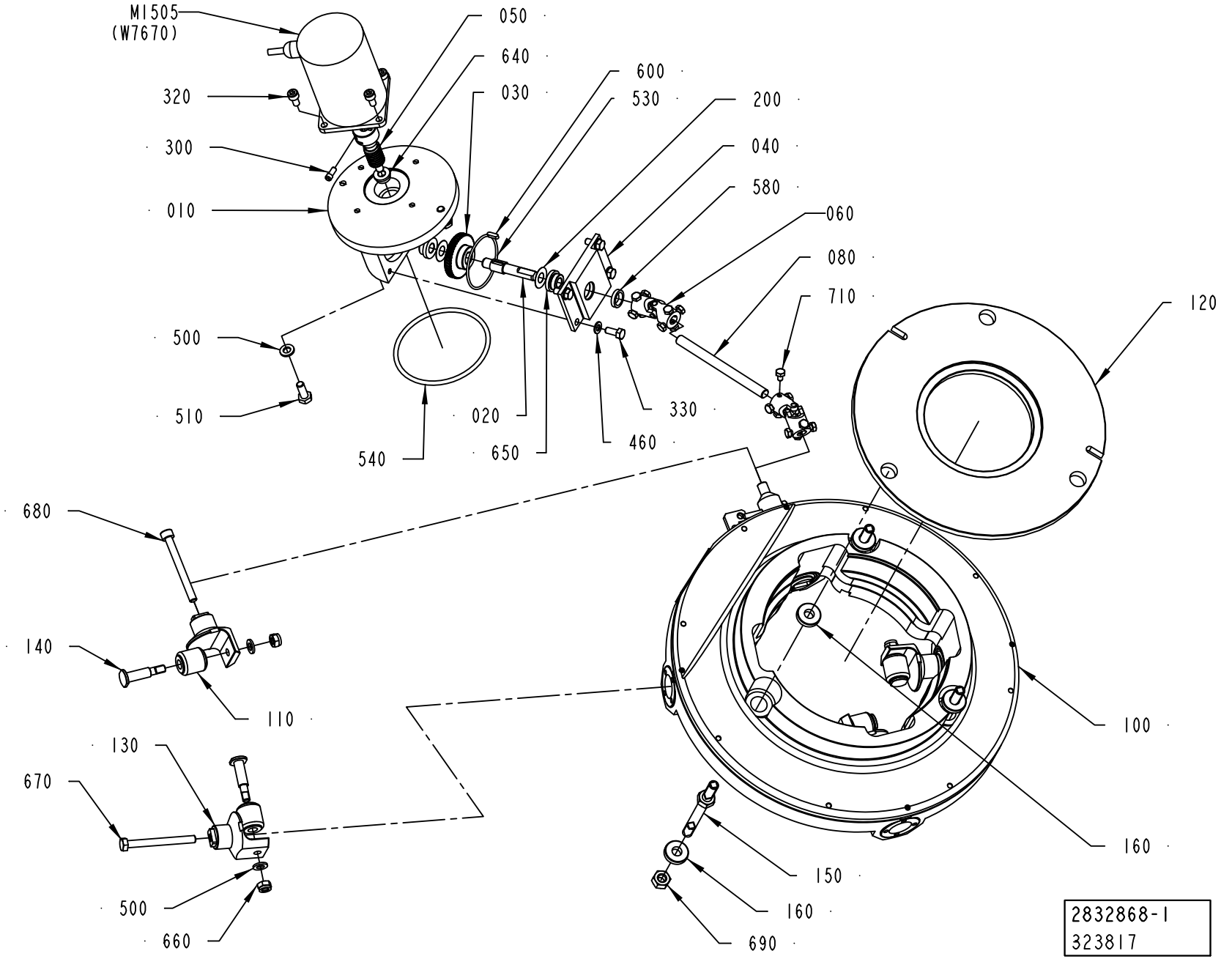
M1505
(W7670)
050
640
030
600
530
200
040
580
060
080
710
120
320
300
010
500
510
540
020
650
460
330
680
140
110
130
670
500
660
100
160
150
160
690
2832868-1
323817

ECM: 340594 - 20080403
Group number: 2832868-0100
Assembly Drawing: 2832868-1_1_AB

Pos	Part No	UN	Qty	Description	Page No
-					
010	2794964-0000		1	MOTOR BRACKET	
020	2794965-0000		1	SHAFT	
030	2876044-0000		1	GEAR WHEEL	
040	2794967-0000		1	COVER	
050	2918611-0000		1	WORM SHAFT	
060	2921201-0000		2	JOINT	
080	2892732-0000		1	SHAFT	
100	2833342-0000		1	STEERING DEVICE	
110	2832867-0000		4	ROLLER	
120	2872063-0000		1	PLATE	
130	2872064-0000		4	BRACKET	
140	2872065-0000		4	PIN	
150	2876041-0000		3	SCREW	
160	2821398-0000		3	WASHER	
200	2033-0011		2	WASHER	
300	2918612-0000		1	SCREW	
320	312115-0325		4	SCREW ISO4762 M5X10 A4 80	
330	312105-0327		4	SCREW M6S ISO 4017 M5X12 A480	
460	315105-0146		4	WASHER BRB 5,3X10 RFR	
500	315105-0153		6	WASHER BRB 6,4X12 RFR	
510	312105-0368		2	SCREW M6S ISO 4017 M6X16 A480	
530	315202-0803		1	O-RING 44,17X1,78 MM	
540	315202-0612		1	O-RING 75,79X3,53 MM	
580	315230-0128		1	BEARING SEAL G8X15X3 MM	
600	315701-0134		1	PARALLEL KEY W. ROUND ENDS 3X3X10 MM	
640	321101-0125		1	FLANGE BUSHING, 6X12X6 MM	
650	321101-0143		2	FLANGE BUSHING, 8X14X8 MM	
660	312812-0316		4	HEXAGON NUT, NY-LOCK M6 A480	
670	312105-0382		3	SCREW M6S ISO 4014 M6X60 A480	
680	312115-0382		1	SCREW ISO4762 M6X60 A4 80	
690	312605-0318		3	HEXAGON NUT, M6M M8 A280	
710	312105-0285		16	SCREW M6S ISO 4017 M4X6 A470	
M1505	90045-0189		1	STEP MOTOR E22NSLT-LNN-NS-02	

Pos	Part No	UN	Qty	Description	Page No

Machine Type | Group Description | Used-In | Group Number | Page No

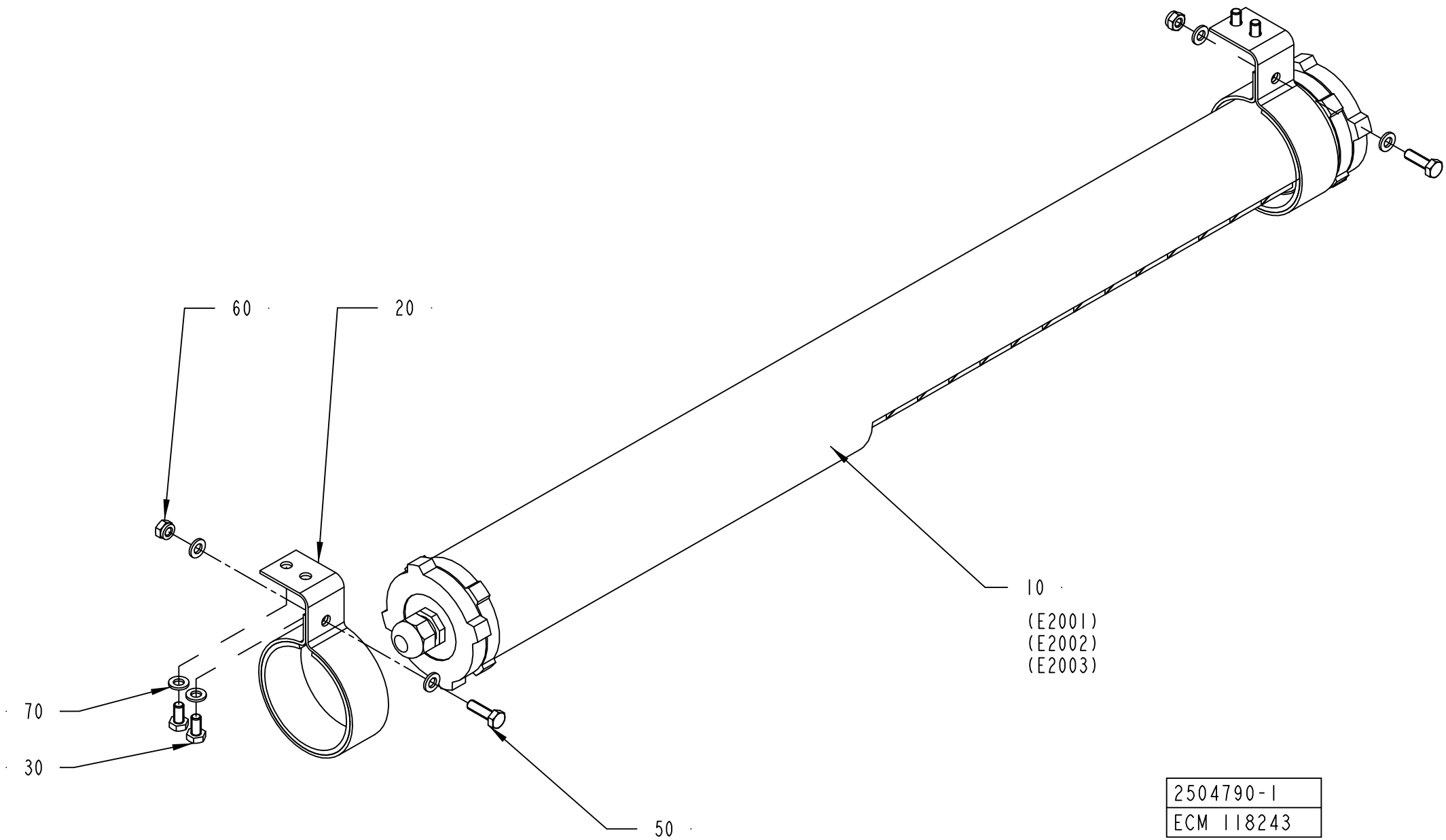
60
20
10
(E2001)
(E2002)
(E2003)
70
30
50
2504790-1
ECM 118243

ECM: 189766 - 20041104
Group number: 2504790-0100
Assembly Drawing: 2504790-1_1_AA

Pos	Part No	UN	Qty	Description	Page No
-					
010	90459-1000		1	LIGHT FIXTURE, RL 70CV-136/230V 50HZ	
020	1140129-0000		2	HOLDER	
030	312105-0366		4	SCREW M6S ISO 4017 M6X12 A480	
050	312105-0370		2	SCREW M6S ISO 4017 M6X20 A480	
060	312812-0316		2	HEXAGON NUT, NY-LOCK M6 A480	
070	315105-0153		8	WASHER BRB 6,4X12 RFR	

Pos	Part No	UN	Qty	Description	Page No

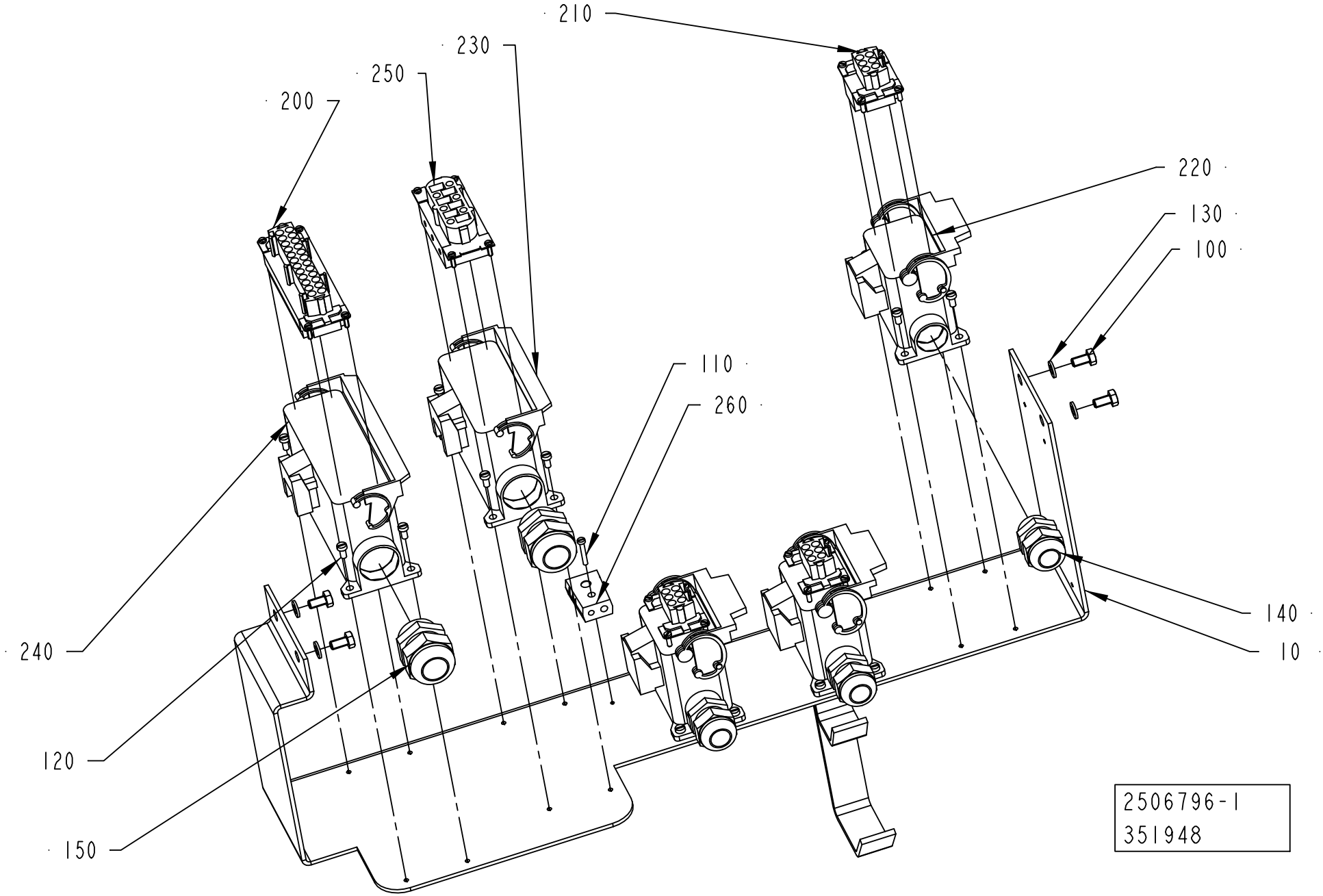
210
230
250
200
220
130
100
110
260
240
120
150
140
10
2506796-1
351948

ECM: 360644 - 20081001
Group number: 2506796-0100
Assembly Drawing: 2506796-1_1_AC

This list covers pages from 2-98 to 2-101

Pos	Part No	UN	Qty	Description	Page No
A3/FLEX TBA, A3/FLEX TPA					
120	312125-0287		20	SCREW ISO 1207 M4X8 A4	
200	90110-0151		1	FEMALE INSERT 24-POL 121130 0000	
240	90110-0225		1	CHASSIS HOUSING 310168-33	
A3/FLEX TGA					
120	312125-0287		24	SCREW ISO 1207 M4X8 A4	
160	353240-0005		2	GLAND W/O INSERT PG21 NORMAL	
170	90458-0188		1	GLAND, INSERT, MULTI HOLE, 1X7/1X10,5	
175	2957794-0000		1	INSERT	
180	90458-0305		1	CABLE GLAND, M12X1,5, NO.5311 1000	
190	90458-0321		1	NUT, M12X1,5	
200	90110-0151		2	FEMALE INSERT 24-POL 121130 0000	
240	90110-0225		2	CHASSIS HOUSING 310168-33	
270	90110-0228		1	CABLE HOOD 24-POL 71.350.2428.0	
280	90110-0150		1	MALE INSERT 121110 0000	
290	90458-0860		1	PROX.SWITCH E2E-X1B1-5M	
Common Parts					
010	2506920-0000		1	CANTILEVER	
100	312105-0366		4	SCREW M6S ISO 4017 M6X12 A480	
110	312125-0230		1	SCREW ISO 1207 M3X20 A4	
130	315105-0153		4	WASHER BRB 6,4X12 RFR	
140	352103-0111		3	CABLE GLAND, ST 16, PR22,5/PG16	
150	352103-0116		2	CABLE GLAND, ST 21, PR28,3/PG21	
210	90110-0163		3	FEMALE INSERT 70 300 0640 0	
220	90110-0221		3	CHASSIS HOUSING 310162-33	
230	90110-0224		1	CHASSIS HOUSING 310166-33	
250	90110-0247		1	FEMALE INSERT 70.200.0653.0	
260	90326-0020		1	PLUG, FEMALE YELLOW CR-AL	

Pos	Part No	UN	Qty	Description	Page No

CABLE CONNECTION

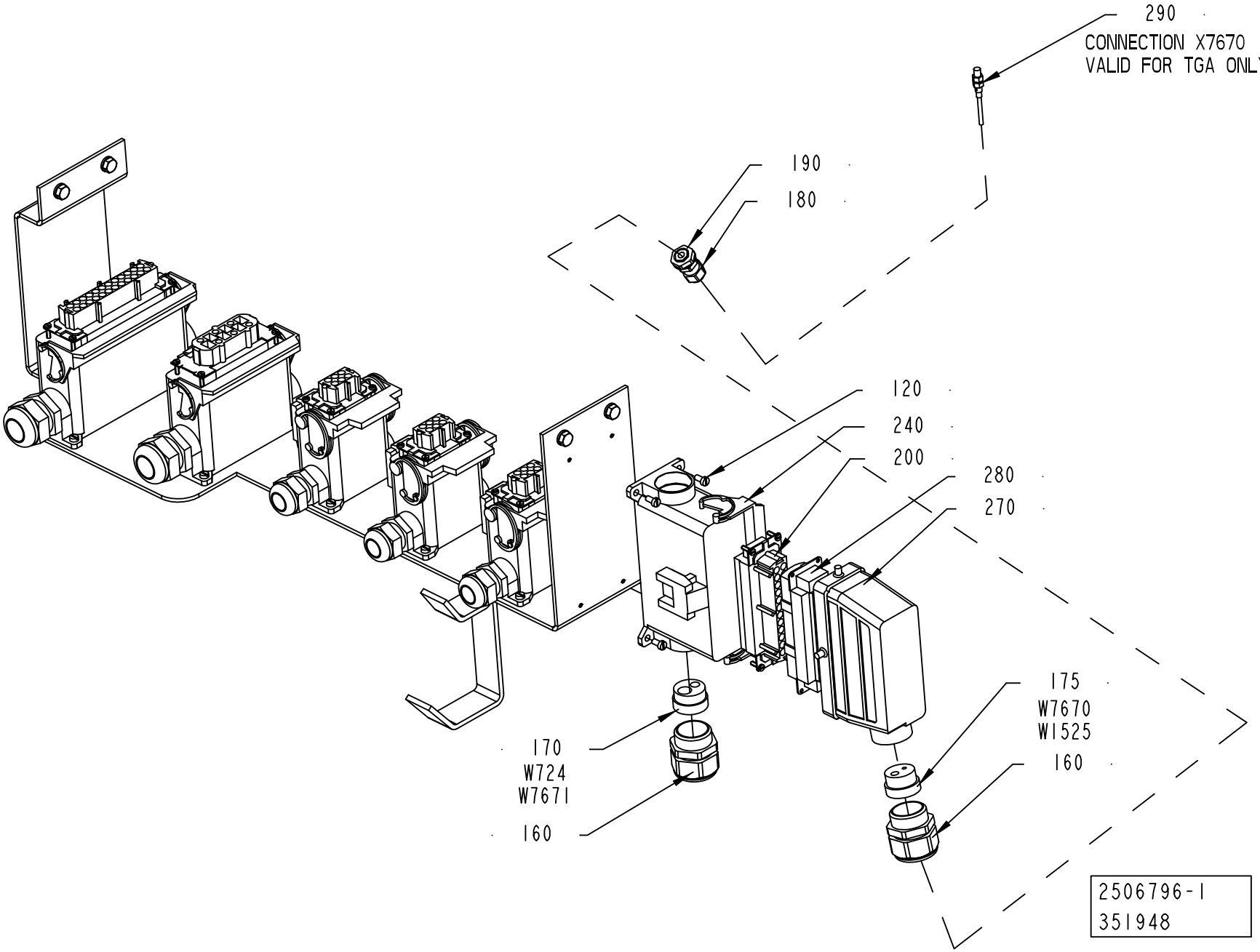

ECM: 360644 - 20081001
Group number: 2506796-0100
Assembly Drawing: 2506796-1_2_AC

This list covers pages from 2-98 to 2-101

Pos	Part No	UN	Qty	Description	Page No
A3/FLEX TBA, A3/FLEX TPA					
120	312125-0287		20	SCREW ISO 1207 M4X8 A4	
200	90110-0151		1	FEMALE INSERT 24-POL 121130 0000	
240	90110-0225		1	CHASSIS HOUSING 310168-33	
A3/FLEX TGA					
120	312125-0287		24	SCREW ISO 1207 M4X8 A4	
160	353240-0005		2	GLAND W/O INSERT PG21 NORMAL	
170	90458-0188		1	GLAND, INSERT, MULTI HOLE, 1X7/1X10,5	
175	2957794-0000		1	INSERT	
180	90458-0305		1	CABLE GLAND, M12X1,5, NO.5311 1000	
190	90458-0321		1	NUT, M12X1,5	
200	90110-0151		2	FEMALE INSERT 24-POL 121130 0000	
240	90110-0225		2	CHASSIS HOUSING 310168-33	
270	90110-0228		1	CABLE HOOD 24-POL 71.350.2428.0	
280	90110-0150		1	MALE INSERT 121110 0000	
290	90458-0860		1	PROX.SWITCH E2E-X1B1-5M	
Common Parts					
010	2506920-0000		1	CANTILEVER	
100	312105-0366		4	SCREW M6S ISO 4017 M6X12 A480	
110	312125-0230		1	SCREW ISO 1207 M3X20 A4	
130	315105-0153		4	WASHER BRB 6,4X12 RFR	
140	352103-0111		3	CABLE GLAND, ST 16, PR22,5/PG16	
150	352103-0116		2	CABLE GLAND, ST 21, PR28,3/PG21	
210	90110-0163		3	FEMALE INSERT 70 300 0640 0	
220	90110-0221		3	CHASSIS HOUSING 310162-33	
230	90110-0224		1	CHASSIS HOUSING 310166-33	
250	90110-0247		1	FEMALE INSERT 70.200.0653.0	
260	90326-0020		1	PLUG, FEMALE YELLOW CR-AL	

Pos	Part No	UN	Qty	Description	Page No

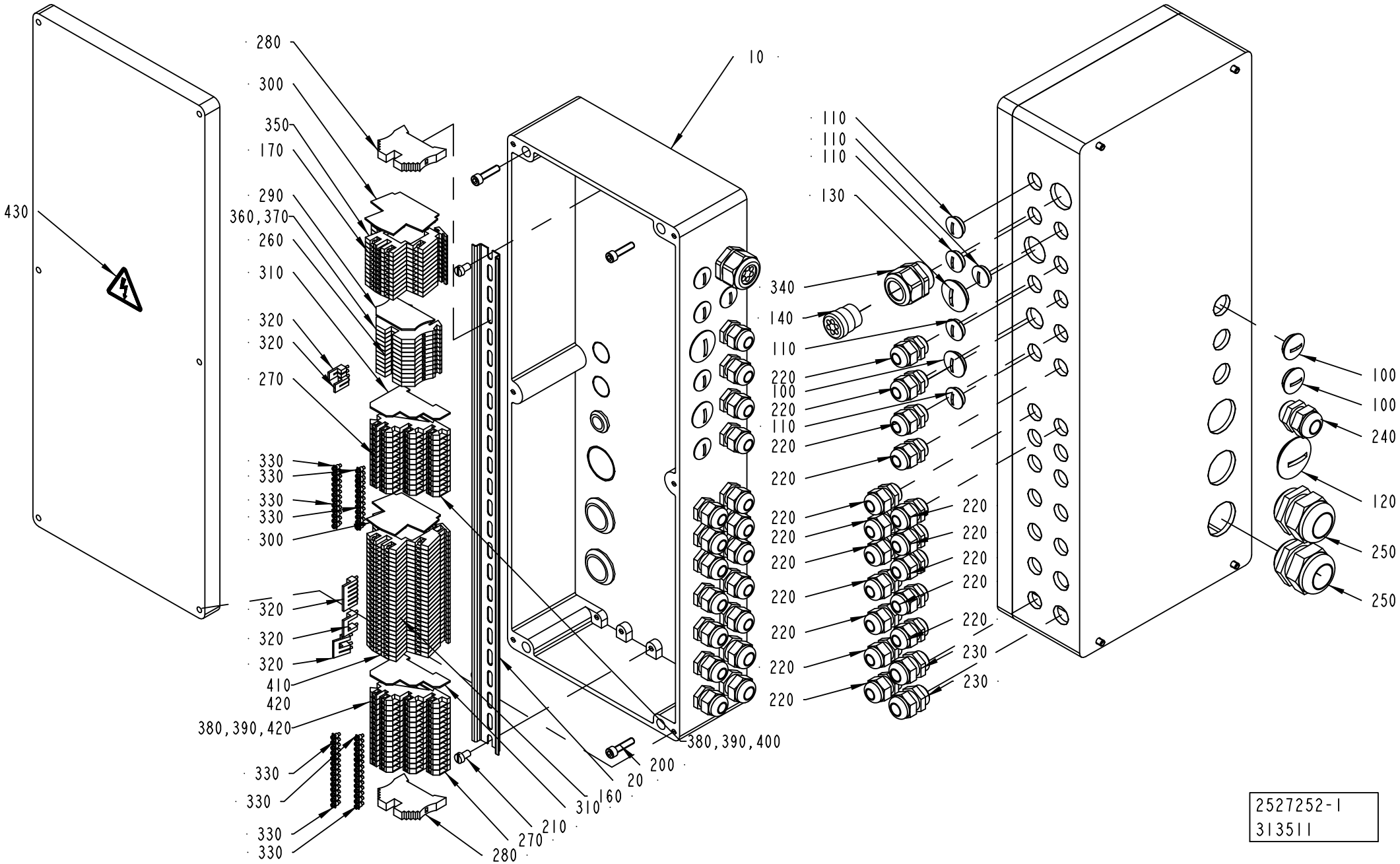

2527252-1
313511

ECM: 339948 - 20080402
Group number: 2527252-0100
Assembly Drawing: 2527252-1_1_AB

Pos	Part No	UN	Qty	Description	Page No
A3/FLEX					
100	90002-0004		3	BLANK-OFF PLUG, PR 22,5 SKINDICHT-BLK16	
110	90002-0009		5	BLANK-OFF PLUG, PR 18.6 SKINDICHT-BLK11	
200	312115-0372		4	SCREW ISO4762 M6X25 A4 80	
220	352103-0106		16	CABLE GLAND, ST 11, PR18,6/PG11	
240	352103-0110		1	CABLE GLAND, STR 16, PR22,5/PG16	
250	352103-0121		2	CABLE GLAND, ST 29, PR37,0/PG29	
270	353021-0301		26	TERMINALS,TRIPLE-LEVEL, DLI 2,5/35 PA	
400	359011-0811		2	MARKING PLATES 5-FW 201-2	
Common Parts					
010	2537111-0000		1	CONNECTION BOX	
020	1347878-0000		1	RAIL	
120	90002-0010		1	BLANK-OFF PLUG, PR 37 SKINDICHT-BLK29	
130	90002-0012		1	BLANK-OFF PLUG, PR 28,3 SKINDICHT-BLK21	
140	90012-0125		1	GLAND FITTING	
160	90077-0113		26	FEED THROUGH TERMINAL, 10-00102150-1	
170	90458-1136		11	TERMINAL BLOCK, 103630	
210	312121-0364		2	SCREW ISO 1207 M6X10 4.8-5.8 Z.PL.	
230	352103-0108		2	CABLE GLAND, ST 13,5 , PR20,4/PG13,5	
260	353021-0212		11	FEED THROUGH TERMINAL, 10200.0	
280	353031-0203		2	END SUPPORT, WEW 35/2	
290	353032-0004		1	END PLATE WAP 2,5-10 BEIGE	
300	353032-0009		2	END PLATE, WAP FOR WDK	
310	353032-0301		2	END PLATE WAP, 13132.6	
320	353034-0030		4	BRIDGE CONNECTOR WQV 2,5/10, 10544.6	
330	353034-0404		1	BRIDGE CONNECTOR Q10, 13131.0	
340	353240-0005		1	GLAND W/O INSERT PG21 NORMAL	
350	359011-0834		1	SET OF SIGNS 6-GW(EARTH)	
360	359011-0807		1	MARKING PLATES 5-FW 1-50	
370	359011-0807		1	MARKING PLATES 5-FW 1-50	
380	359011-0817		1	SYMBOL 5-GW (+) 50PC	
390	359011-0818		1	SYMBOL 5-GW (-) 50PC	
410	359011-0824		2	SET OF SIGNS 6-FW 151-200	
420	359011-0823		2	SET OF SIGNS 6-FW 101-150	
430	359705-0015		1	WARNING SIGN ISO, RISK OF ELECTRIC SHOCK	
W2109	351150-0403	M	2	CABLE OLFLEX 3X0,75 MM2 LIGHT/GREY	
W2235	351150-0403	M	2	CABLE OLFLEX 3X0,75 MM2 LIGHT/GREY	

Pos	Part No	UN	Qty	Description	Page No

DOOR SAFETY SWITCH

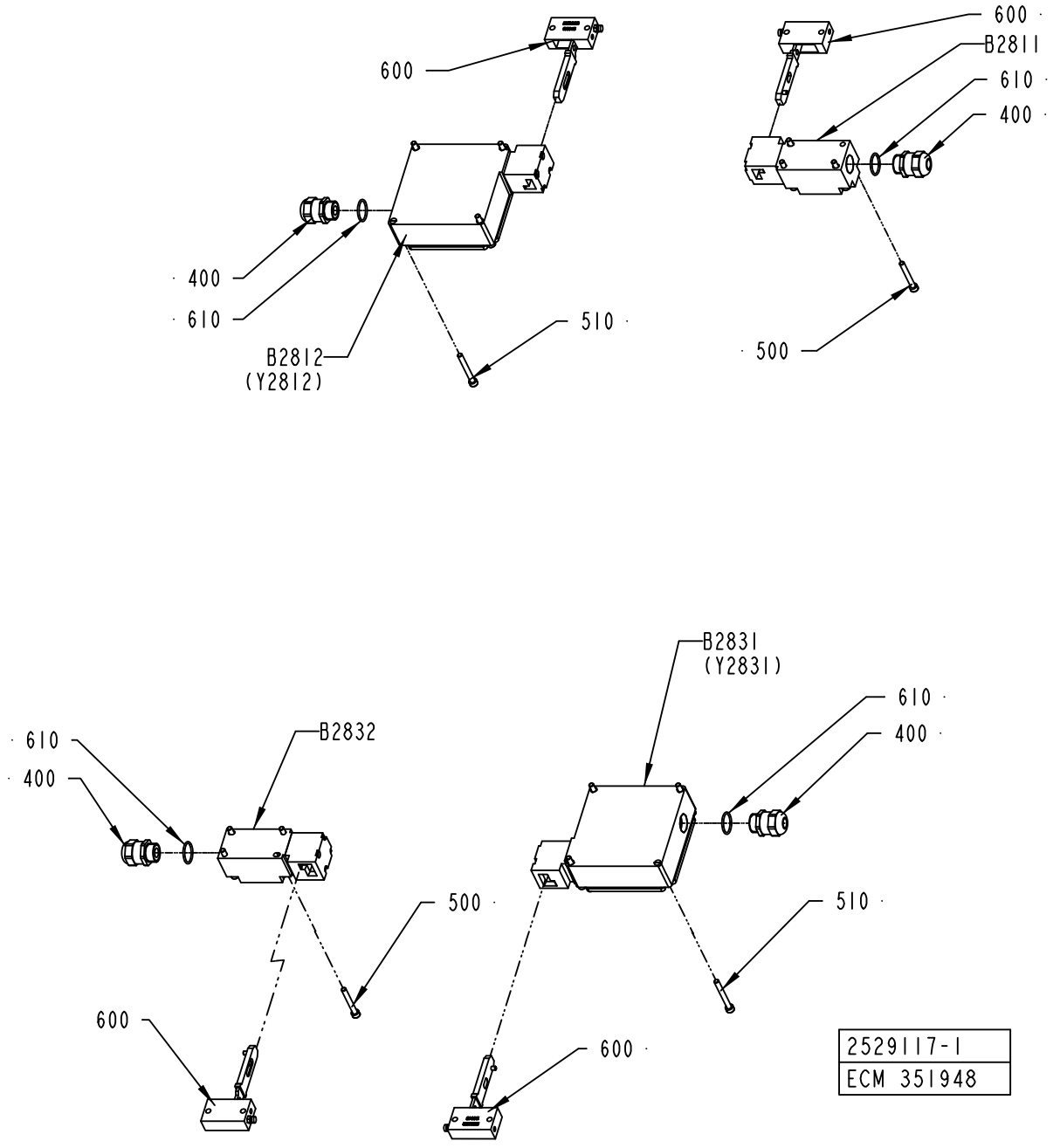

ECM: 360646 - 20081001
Group number: 2529117-0100
Assembly Drawing: 2529117-1_1_AB

Pos	Part No	UN	Qty	Description	Page No
-					
400	90458-0307		4	CABLE GLAND, M20X1,5, NO.5311 1020	
500	312115-0339		8	SCREW ISO4762 M5X40 A4 80	
510	312115-0340		8	SCREW ISO4762 M5X45 A4 80	
600	90600-5274		4	KEY FOR SAF.SW.TZRE024PG RC1635-103845 Z	
610	315206-0707		4	O-RING 20,35X1,78 MM	
B2811	90044-0204		1	KEY SAF.SW. NZIVZ-538-E	
B2812	90457-0196		1	KEY SAF.SW. TZ2RE024PG RC1635	
B2831	90457-0196		1	KEY SAF.SW. TZ2RE024PG RC1635	
B2832	90044-0204		1	KEY SAF.SW. NZIVZ-538-E	

Pos	Part No	UN	Qty	Description	Page No

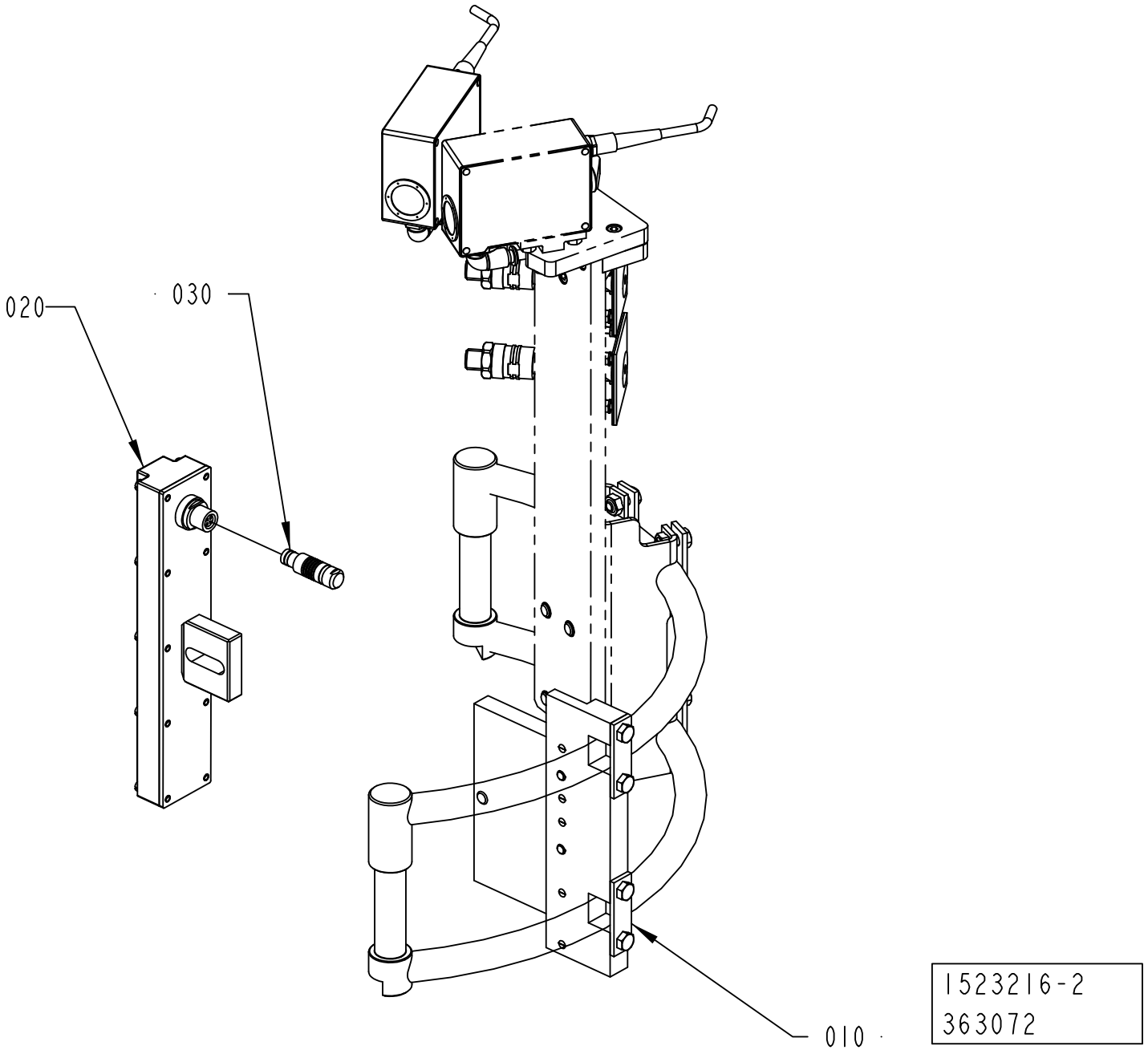
020
030
010
1523216-2
363072

ECM: 363118 - 20090101
Group number: 1523216-0200
Assembly Drawing: 1523216-2_1_AC

Pos	Part No	UN	Qty	Description	Page No
-					
010	1487338-0200		1	SUPPORT LEVEL DETECTOR	**2-109, 2-111, 2-113, 2-115**
020	2968260-0000		1	LEVEL PROBE	
030	90459-4705		1	LOCKING PLUG, S 103 A 053-130+ AND 90220	
	90459-4707		*1*	*RECEPTACLE, MOD.DBEE 103 A 053-130*	

Pos	Part No	UN	Qty	Description	Page No

SUPPORT LEVEL DETECTOR

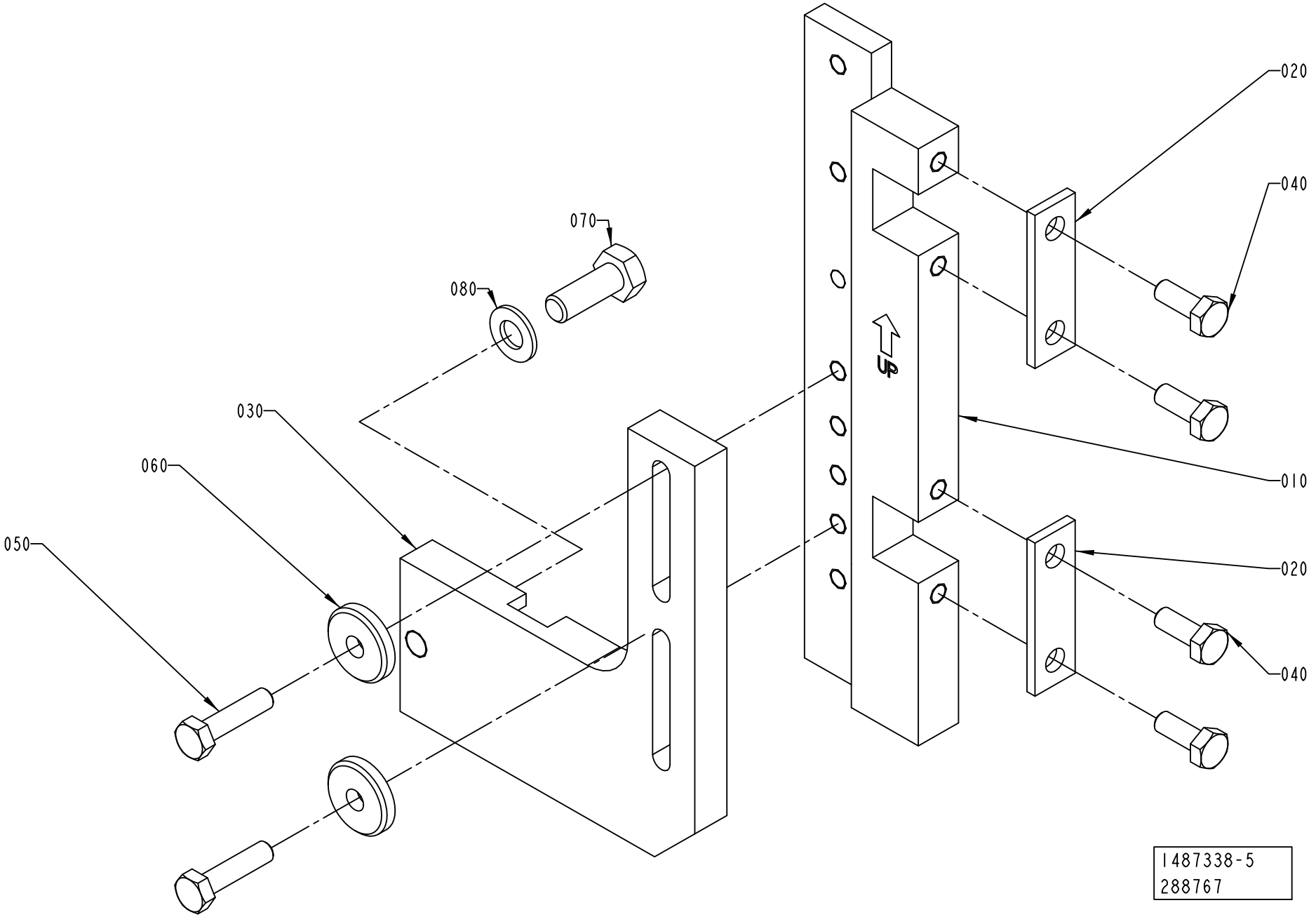

Pos	Part No	UN	Qty	Description	Page No
TBA 0200M, TBA 0200B, TBA 0200SQ, TBA 0250S, TBA 0250B, TBA 0330S, TPA 0330SQ, TPA 0250SQ, TPA 0200SQ, TBA 0250SQ (See drawing on page: 2-108)					
010	2715298-0000		1	BRACKET	
030	1348359-0000		1	BRACKET	
TBA 0200S, TPA 0500SQ (See drawing on page: 2-112)					
010	2715298-0000		1	BRACKET	
030	2874952-0000		1	BRACKET	
TBA 0500S, TBA 0500SQ, TBA 0500B, TBA 1000B, TBA 1000SQ, TBA 1000S, TBA 1500S, TPA 1000SQ NOQC (See drawing on page: 2-110)					
010	2715298-0000		1	BRACKET	
030	1317475-0000		1	BRACKET	
TBA 1890S, TBA 2000S, TBA 1400B (See drawing on page: 2-110)					
010	2715299-0000		1	BRACKET	
030	2656899-0000		1	BRACKET	
TGA 1000SQ, TGA 0750SQ, TGA 0500SQ (See drawing on page: 2-114)					
010	2888153-0000		1	BRACKET	
020	2797439-0000		1	FASTENING PLATE	
030	1317475-0000		1	BRACKET	
040	312105-0368		2	SCREW M6S ISO 4017 M6X16 A480	
TPA 1000SQ QC, TPA 0750SQ QC (See drawing on page: 2-110)					
010	2715299-0000		1	BRACKET	
030	1317475-0000		1	BRACKET	
Common Parts					
020	1036673-0000		2	WASHER	
040	312105-0368		4	SCREW M6S ISO 4017 M6X16 A480	
050	312105-0372		2	SCREW M6S ISO 4017 M6X25 A480	
060	315125-0153		2	WASHER TBRSB 6,4X22X4 A4	
070	312105-0452		1	SCREW M6S ISO 4017 M8X22 A480	
080	315105-0165		1	WASHER BRB 8,4X16 RFR	

Pos	Part No	UN	Qty	Description	Page No

SUPPORT LEVEL DETECTOR

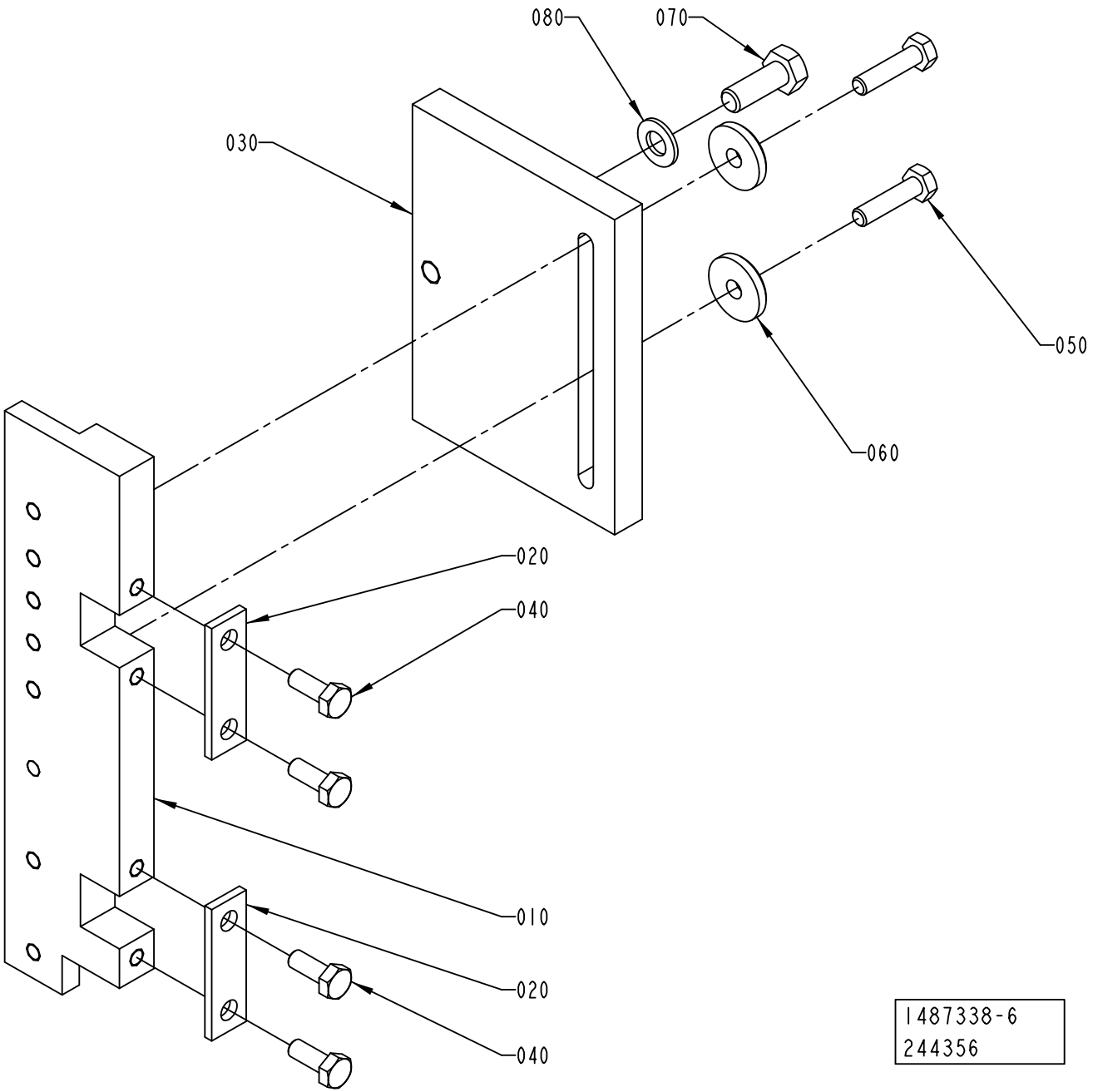

Pos	Part No	UN	Qty	Description	Page No
TBA 0200M, TBA 0200B, TBA 0200SQ, TBA 0250S, TBA 0250B, TBA 0330S, TPA 0330SQ, TPA 0250SQ, TPA 0200SQ, TBA 0250SQ (See drawing on page: 2-108)					
010	2715298-0000		1	BRACKET	
030	1348359-0000		1	BRACKET	
TBA 0200S, TPA 0500SQ (See drawing on page: 2-112)					
010	2715298-0000		1	BRACKET	
030	2874952-0000		1	BRACKET	
TBA 0500S, TBA 0500SQ, TBA 0500B, TBA 1000B, TBA 1000SQ, TBA 1000S, TBA 1500S, TPA 1000SQ NOQC (See drawing on page: 2-110)					
010	2715298-0000		1	BRACKET	
030	1317475-0000		1	BRACKET	
TBA 1890S, TBA 2000S, TBA 1400B (See drawing on page: 2-110)					
010	2715299-0000		1	BRACKET	
030	2656899-0000		1	BRACKET	
TGA 1000SQ, TGA 0750SQ, TGA 0500SQ (See drawing on page: 2-114)					
010	2888153-0000		1	BRACKET	
020	2797439-0000		1	FASTENING PLATE	
030	1317475-0000		1	BRACKET	
040	312105-0368		2	SCREW M6S ISO 4017 M6X16 A480	
TPA 1000SQ QC, TPA 0750SQ QC (See drawing on page: 2-110)					
010	2715299-0000		1	BRACKET	
030	1317475-0000		1	BRACKET	
Common Parts					
020	1036673-0000		2	WASHER	
040	312105-0368		4	SCREW M6S ISO 4017 M6X16 A480	
050	312105-0372		2	SCREW M6S ISO 4017 M6X25 A480	
060	315125-0153		2	WASHER TBRSB 6,4X22X4 A4	
070	312105-0452		1	SCREW M6S ISO 4017 M8X22 A480	
080	315105-0165		1	WASHER BRB 8,4X16 RFR	

Pos	Part No	UN	Qty	Description	Page No

SUPPORT LEVEL DETECTOR

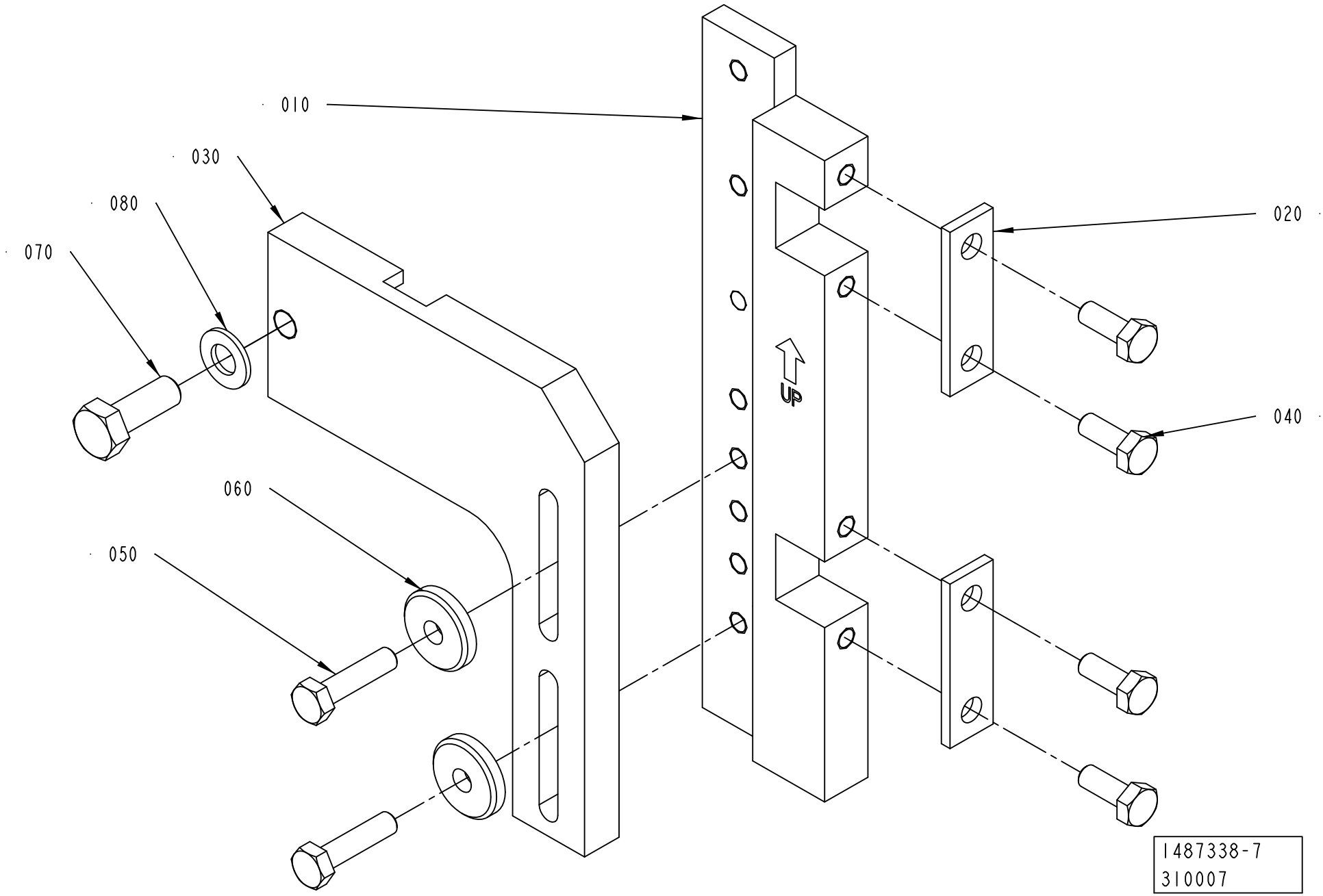

Pos	Part No	UN	Qty	Description	Page No
TBA 0200M, TBA 0200B, TBA 0200SQ, TBA 0250S, TBA 0250B, TBA 0330S, TPA 0330SQ, TPA 0250SQ, TPA 0200SQ, TBA 0250SQ (See drawing on page: 2-108)					
010	2715298-0000		1	BRACKET	
030	1348359-0000		1	BRACKET	
TBA 0200S, TPA 0500SQ (See drawing on page: 2-112)					
010	2715298-0000		1	BRACKET	
030	2874952-0000		1	BRACKET	
TBA 0500S, TBA 0500SQ, TBA 0500B, TBA 1000B, TBA 1000SQ, TBA 1000S, TBA 1500S, TPA 1000SQ NOQC (See drawing on page: 2-110)					
010	2715298-0000		1	BRACKET	
030	1317475-0000		1	BRACKET	
TBA 1890S, TBA 2000S, TBA 1400B (See drawing on page: 2-110)					
010	2715299-0000		1	BRACKET	
030	2656899-0000		1	BRACKET	
TGA 1000SQ, TGA 0750SQ, TGA 0500SQ (See drawing on page: 2-114)					
010	2888153-0000		1	BRACKET	
020	2797439-0000		1	FASTENING PLATE	
030	1317475-0000		1	BRACKET	
040	312105-0368		2	SCREW M6S ISO 4017 M6X16 A480	
TPA 1000SQ QC, TPA 0750SQ QC (See drawing on page: 2-110)					
010	2715299-0000		1	BRACKET	
030	1317475-0000		1	BRACKET	
Common Parts					
020	1036673-0000		2	WASHER	
040	312105-0368		4	SCREW M6S ISO 4017 M6X16 A480	
050	312105-0372		2	SCREW M6S ISO 4017 M6X25 A480	
060	315125-0153		2	WASHER TBRSB 6,4X22X4 A4	
070	312105-0452		1	SCREW M6S ISO 4017 M8X22 A480	
080	315105-0165		1	WASHER BRB 8,4X16 RFR	

Pos	Part No	UN	Qty	Description	Page No

SUPPORT LEVEL DETECTOR

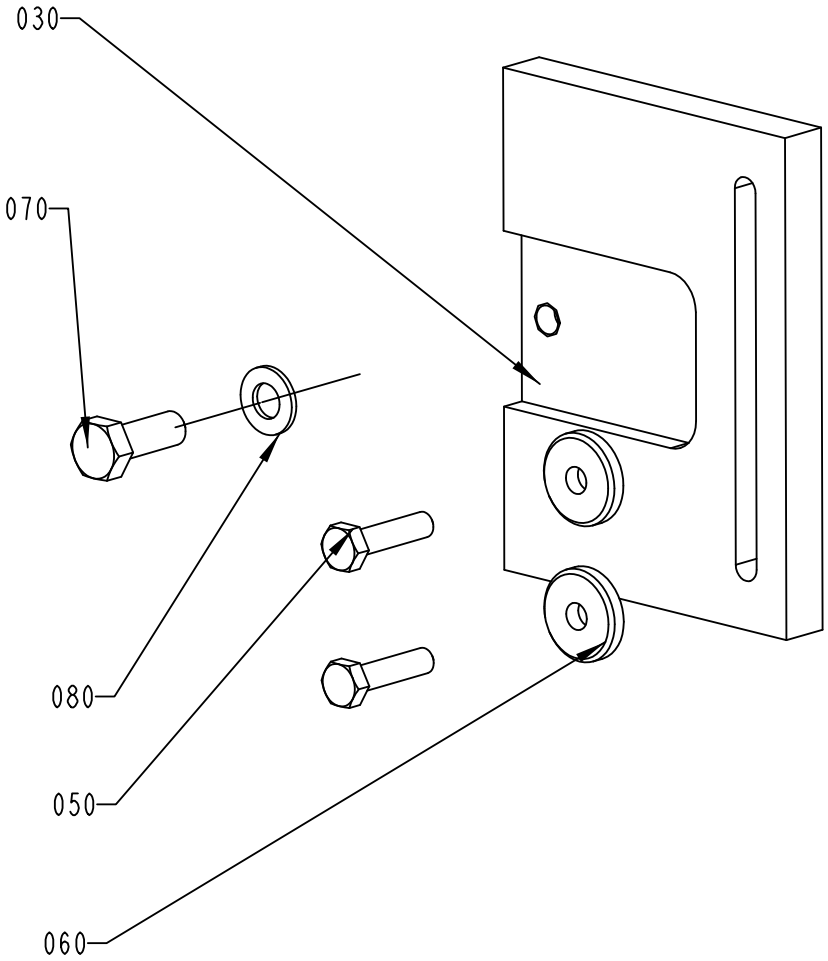

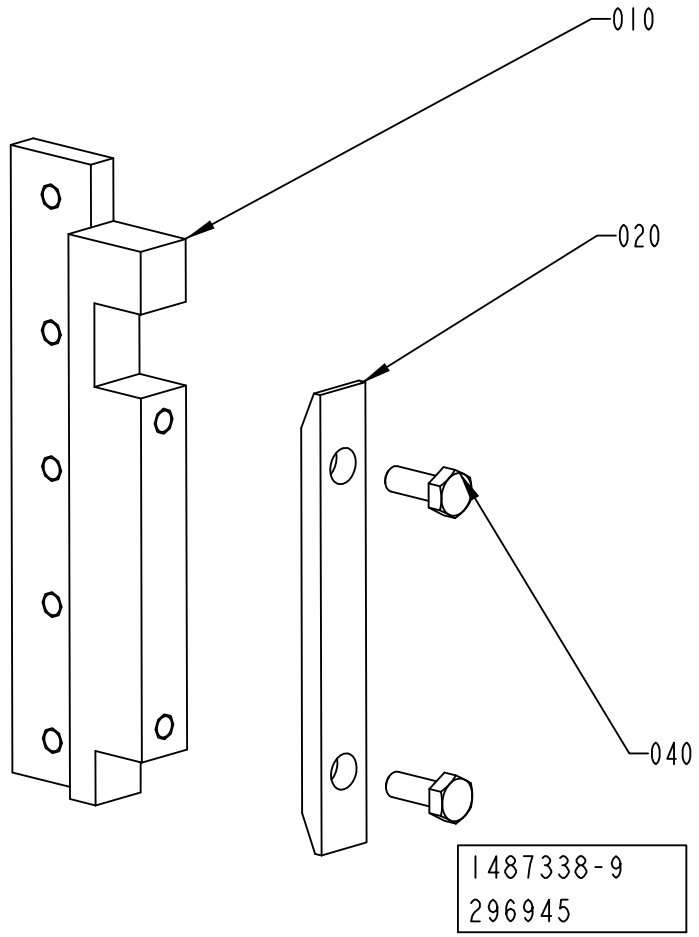

Pos	Part No	UN	Qty	Description	Page No
TBA 0200M, TBA 0200B, TBA 0200SQ, TBA 0250S, TBA 0250B, TBA 0330S, TPA 0330SQ, TPA 0250SQ, TPA 0200SQ, TBA 0250SQ (See drawing on page: 2-108)					
010	2715298-0000		1	BRACKET	
030	1348359-0000		1	BRACKET	
TBA 0200S, TPA 0500SQ (See drawing on page: 2-112)					
010	2715298-0000		1	BRACKET	
030	2874952-0000		1	BRACKET	
TBA 0500S, TBA 0500SQ, TBA 0500B, TBA 1000B, TBA 1000SQ, TBA 1000S, TBA 1500S, TPA 1000SQ NOQC (See drawing on page: 2-110)					
010	2715298-0000		1	BRACKET	
030	1317475-0000		1	BRACKET	
TBA 1890S, TBA 2000S, TBA 1400B (See drawing on page: 2-110)					
010	2715299-0000		1	BRACKET	
030	2656899-0000		1	BRACKET	
TGA 1000SQ, TGA 0750SQ, TGA 0500SQ (See drawing on page: 2-114)					
010	2888153-0000		1	BRACKET	
020	2797439-0000		1	FASTENING PLATE	
030	1317475-0000		1	BRACKET	
040	312105-0368		2	SCREW M6S ISO 4017 M6X16 A480	
TPA 1000SQ QC, TPA 0750SQ QC (See drawing on page: 2-110)					
010	2715299-0000		1	BRACKET	
030	1317475-0000		1	BRACKET	
Common Parts					
020	1036673-0000		2	WASHER	
040	312105-0368		4	SCREW M6S ISO 4017 M6X16 A480	
050	312105-0372		2	SCREW M6S ISO 4017 M6X25 A480	
060	315125-0153		2	WASHER TBRSB 6,4X22X4 A4	
070	312105-0452		1	SCREW M6S ISO 4017 M8X22 A480	
080	315105-0165		1	WASHER BRB 8,4X16 RFR	

Pos	Part No	UN	Qty	Description	Page No

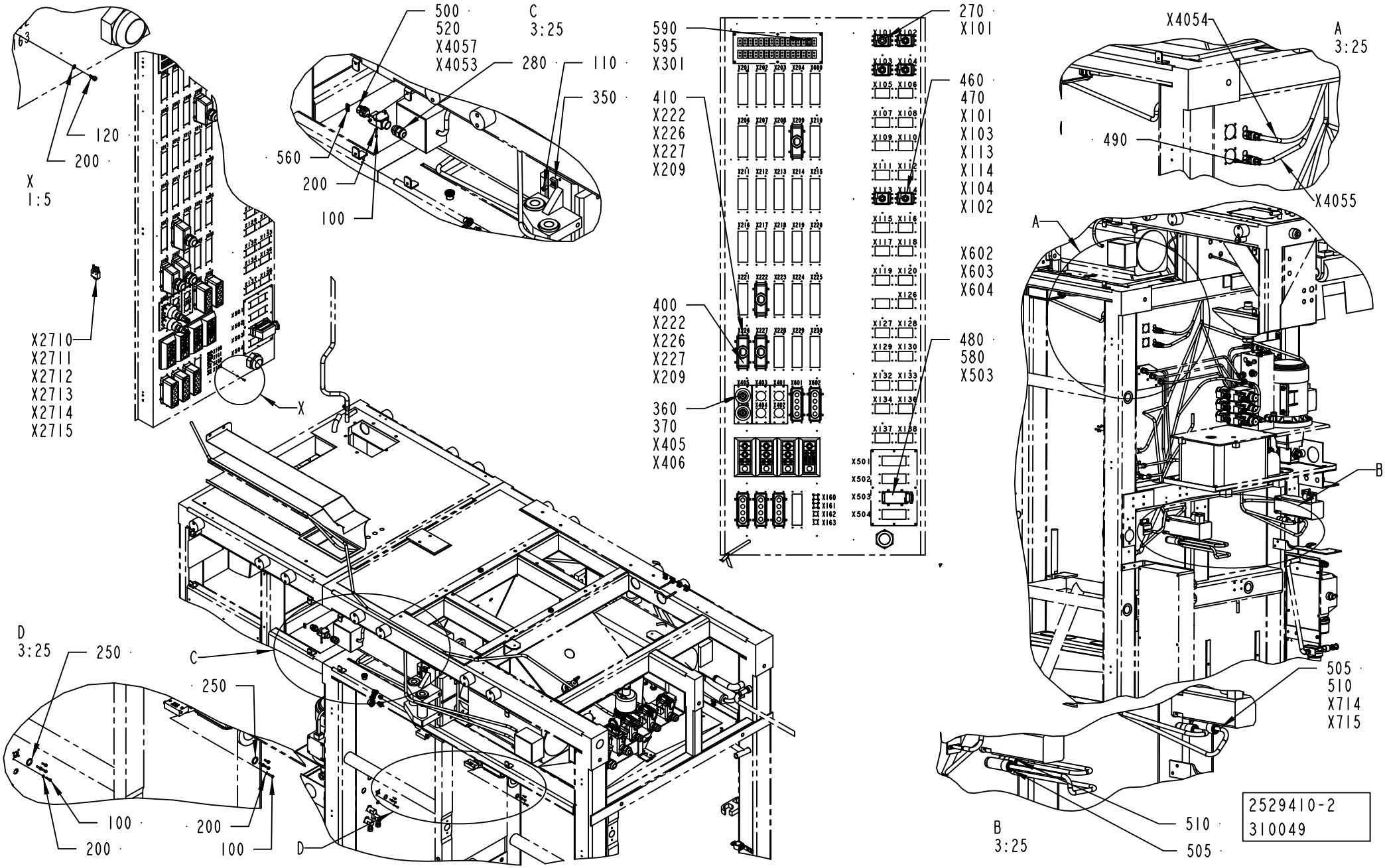
163
120
200
X
1:5
X2710
X2711
X2712
X2713
X2714
X2715
500
520
X4057
X4053
C
3:25
280
110
350
560
200
100
590
595
X301
410
X222
X226
X227
X209
400
X222
X226
X227
X209
360
370
X405
X406
270
X101
460
470
X101
X103
X113
X114
X104
X102
X602
X603
X604
480
580
X503
X4054
A
3:25
490
X4055
A
B
505
510
X714
X715
B
3:25
510
505
2529410-2
310049
D
3:25
250
250
C
100
200
200
100
D

ECM: 340554 - 20080403
Group number: 2529410-0150
Assembly Drawing: 2529410-2_1_AD

This list covers pages from 2-116 to 2-123

Pos	Part No	UN	Qty	Description	Page No
A3/FLEX TBA, A3/FLEX TPA (See drawing on pages: 2-116, 2-118, 2-120, 2-122)					
100	312125-0226		12	SCREW ISO 1207 M3X12 A4	
200	315105-0124		20	WASHER BRB 3,2X6 RFR	
250	315202-0211		2	O-RING 13,3X2,4 MM	
400	90110-0150		4	MALE INSERT 121110 0000	
410	90110-0152		4	CABLE HOOD 24-POL 70.352.2428.1	
490	90459-6568		2	CONNECTOR M12 5-POLES FEMALE, RKCN5/7	
W2090	2540596-0003		1	COAXIAL CABLE	
W2091	2540596-0003		1	COAXIAL CABLE	
A3/FLEX TGA (See drawing on pages: 2-116, 2-118, 2-120, 2-122)					
100	312125-0226		12	SCREW ISO 1207 M3X12 A4	
200	315105-0124		20	WASHER BRB 3,2X6 RFR	
250	315202-0211		2	O-RING 13,3X2,4 MM	
400	90110-0150		5	MALE INSERT 121110 0000	
410	90110-0152		5	CABLE HOOD 24-POL 70.352.2428.1	
490	90459-6568		2	CONNECTOR M12 5-POLES FEMALE, RKCN5/7	
W2090	2540596-0003		1	COAXIAL CABLE	
W2091	2540596-0003		1	COAXIAL CABLE	
W724	90220-0107	M	7000	SCR. CABLE 5X0,75MM2	
W7671	351150-0404	M	7000	CABLE OLFLEX 4X0,75 MM2 LIGHT/GREY	
Common Parts					
110	312125-0364		17	SCREW ISO 1207 M6X10 A4	
120	312115-0222		8	SCREW ISO4762 M3X8 A4 80	
270	352103-0110		1	CABLE GLAND, STR 16, PR22,5/PG16	
280	352103-0106		2	CABLE GLAND, ST 11, PR18,6/PG11	
290	352103-0108		6	CABLE GLAND, ST 13,5 , PR20,4/PG13,5	
300	352103-0120		6	CABLE GLAND, STR 29, PR37,0/PG29	
310	352103-0121		4	CABLE GLAND, ST 29, PR37,0/PG29	
350	352113-0204		17	ANCHOR PLATES FOR STRIPS, TYPE TM3S25-M	
360	90110-0235		2	CABLE CONTACT, PX0739/P	
370	90459-1501		2	CABLE SEALING, 12023/I, ELFA. 44-625-78	
460	90110-0157		6	CABLE HOOD 6-POL 70.352.0628.1	
470	90110-0159		6	MALE INSERT 70.310.0640.0	
480	90110-0156		1	MALE INSERT 70.210.0653.0	
500	90110-0296		2	FEMALE INSERT HDC-HA-4BS 149840-B/2	
520	90110-0370		2	BASE HOUSING	
550	90110-0381		5	COVER, 310601-33 CYR24.4	
560	90110-0385		1	MARKING HOLDER, 4.242.3853.0	
580	90110-0244		1	CABLE HOOD 6-POL 70.350.1628.0	
590	90326-0022		2	PLUG, MALE YELLOW CR-AL	
595	90326-0020		2	PLUG, FEMALE YELLOW CR-AL	
600	90458-1175		2	MULTI DIAMETER MODULE, CM 15W40	
610	90458-1174		4	MULTI DIAMETER MODULE, CM 20W40	
620	90458-1173		7	MULTI DIAMETER MODULE, CM 30W40	
650	359005-0010		11	MARKING LABEL KIT 0 - 9, 04.841.2150.0	
660	359005-0050		11	MARKING LABEL KIT X, 04.841.4550.0	
670	90110-0385		12	MARKING HOLDER, 4.242.3853.0	
W2001	351150-0425	MM	5500	CABLE OLFLEX 25X0,75 MM2 LIGHT/GREY	
W2002	351150-0425	MM	5500	CABLE OLFLEX 25X0,75 MM2 LIGHT/GREY	
W2003	351150-0166	MM	4500	CABLE OLFLEX 4X4 MM2 LIGHT/GREY	
W2005	351150-0412	MM	7000	CABLE OLFLEX 3X1,5 MM2 LIGHT/GREY	
W2007	351150-0418	MM	6200	CABLE OLFLEX 4X2,5 MM2 LIGHT/GREY	
W2008	351150-0418	MM	6200	CABLE OLFLEX 4X2,5 MM2 LIGHT/GREY	
W2009	351150-0418	MM	7000	CABLE OLFLEX 4X2,5 MM2 LIGHT/GREY	
W2050	351150-0425	MM	5500	CABLE OLFLEX 25X0,75 MM2 LIGHT/GREY	
W2055	90220-0034	MM	7500	THERMOCABLE TEX/SITW-20F-KX 2X0,5MM2	
W2071	351150-0412	MM	4500	CABLE OLFLEX 3X1,5 MM2 LIGHT/GREY	
W2072	351150-0412	MM	4500	CABLE OLFLEX 3X1,5 MM2 LIGHT/GREY	
W2211	351150-0412	MM	6000	CABLE OLFLEX 3X1,5 MM2 LIGHT/GREY	
W2225	351150-0405	MM	6500	CABLE OLFLEX 5X0,75 MM2 LIGHT/GREY	
W2226	351150-0406	MM	6500	CABLE OLFLEX 7X0,75 MM2 LIGHT/GREY	
W2230	351150-0405	MM	7500	CABLE OLFLEX 5X0,75 MM2 LIGHT/GREY	
W2231	351150-0406	MM	7500	CABLE OLFLEX 7X0,75 MM2 LIGHT/GREY	
W2232	351150-0406	MM	8000	CABLE OLFLEX 7X0,75 MM2 LIGHT/GREY	
W2235	351150-0403	MM	2500	CABLE OLFLEX 3X0,75 MM2 LIGHT/GREY	
W2244	351150-0412	MM	6000	CABLE OLFLEX 3X1,5 MM2 LIGHT/GREY	
W2270	90220-0091	MM	7000	PAIR TWISTED CABLE 2X2X0,25MM2	
W2271	90220-0091	MM	7000	PAIR TWISTED CABLE 2X2X0,25MM2	
W2710	90459-7174		1	MOTOR POWER CABLE 2090-XXNPMP-10S15	
W2711	90459-7174		1	MOTOR POWER CABLE 2090-XXNPMP-10S15	
W2712	90459-7174		1	MOTOR POWER CABLE 2090-XXNPMP-10S15	
W2713	90459-7174		1	MOTOR POWER CABLE 2090-XXNPMP-10S15	
W2714	90459-2566		1	MOTOR CABLE 16 AWG 2090-XXNPMP-16S15	
W2715	90459-2566		1	MOTOR CABLE 16 AWG 2090-XXNPMP-16S15	
W2720	90600-3188		1	MOTOR FEEDBACK CABLE 2090-XXNFMP-S07/C	
W2721	90600-3188		1	MOTOR FEEDBACK CABLE 2090-XXNFMP-S07/C	
W2722	90600-3188		1	MOTOR FEEDBACK CABLE 2090-XXNFMP-S07/C	
W2723	90600-3188		1	MOTOR FEEDBACK CABLE 2090-XXNFMP-S07/C	
W2724	90600-3188		1	MOTOR FEEDBACK CABLE 2090-XXNFMP-S07/C	
W2725	90600-3188		1	MOTOR FEEDBACK CABLE 2090-XXNFMP-S07/C	
W2730	90459-2577		1	MOTOR BRAKE CABLE 2090-UXNBMP-18S15	
W2731	90459-2577		1	MOTOR BRAKE CABLE 2090-UXNBMP-18S15	
W2732	90459-2577		1	MOTOR BRAKE CABLE 2090-UXNBMP-18S15	
W2733	90459-2577		1	MOTOR BRAKE CABLE 2090-UXNBMP-18S15	

Machine Type | Group Description | Used-In | Group Number | Page No

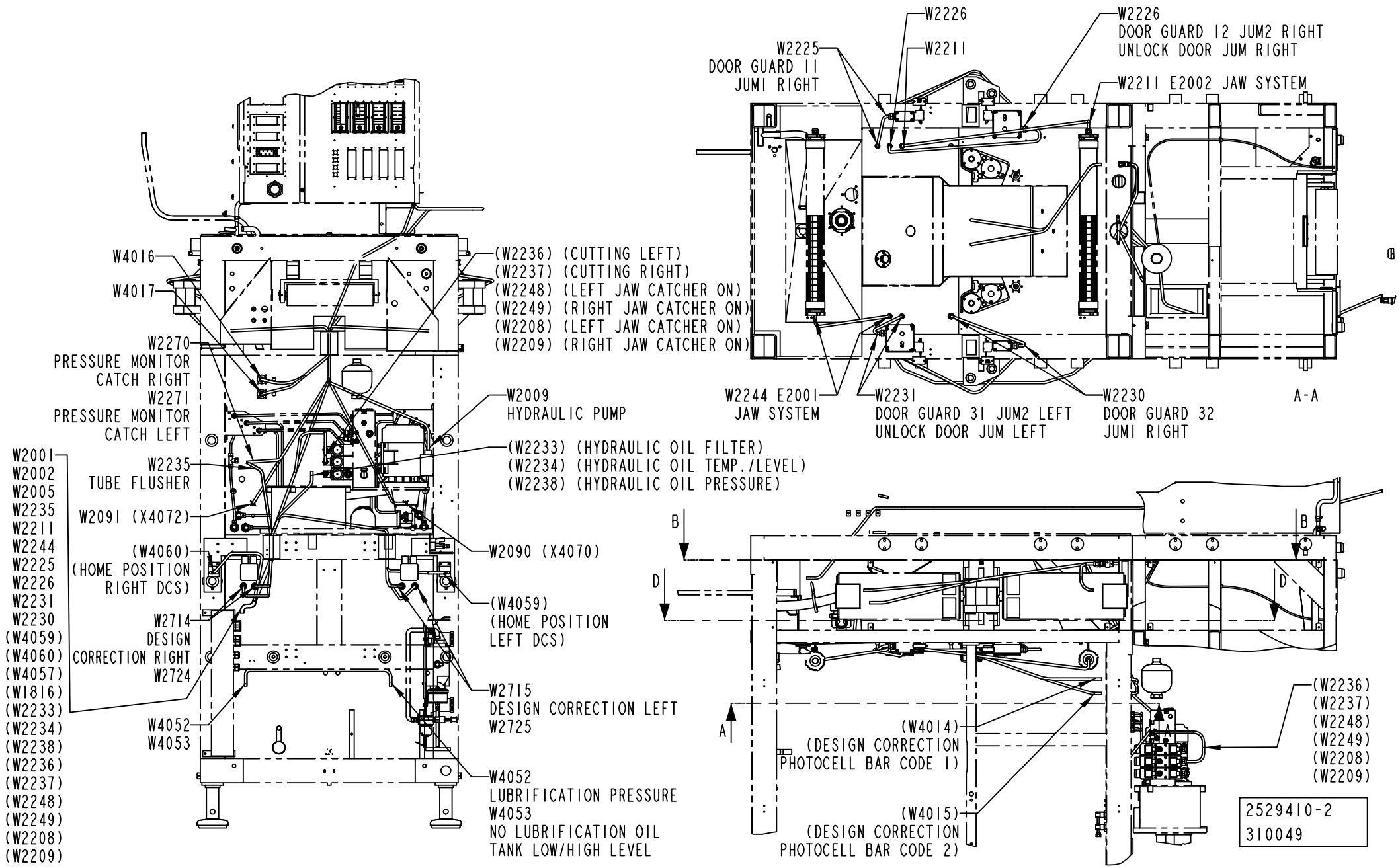
W2226
W2225
DOOR GUARD 11
JUMI RIGHT
W2211
W2226
DOOR GUARD 12 JUM2 RIGHT
UNLOCK DOOR JUM RIGHT
W2211 E2002 JAW SYSTEM
W4016
W4017
(W2236) (CUTTING LEFT)
(W2237) (CUTTING RIGHT)
(W2248) (LEFT JAW CATCHER ON)
(W2249) (RIGHT JAW CATCHER ON)
(W2208) (LEFT JAW CATCHER ON)
(W2209) (RIGHT JAW CATCHER ON)
W2270
PRESSURE MONITOR
CATCH RIGHT
W2271
PRESSURE MONITOR
CATCH LEFT
W2009
HYDRAULIC PUMP
W2244 E2001
JAW SYSTEM
W2231
DOOR GUARD 31 JUM2 LEFT
UNLOCK DOOR JUM LEFT
W2230
DOOR GUARD 32
JUMI RIGHT
A-A
W2001
W2002
W2005
W2235
W2211
W2244
W2225
W2226
W2231
W2230
(W4059)
(W4060)
(W4057)
(W1816)
(W2233)
(W2234)
(W2238)
(W2236)
(W2237)
(W2248)
(W2249)
(W2208)
(W2209)
W2235
TUBE FLUSHER
(W2233) (HYDRAULIC OIL FILTER)
(W2234) (HYDRAULIC OIL TEMP./LEVEL)
(W2238) (HYDRAULIC OIL PRESSURE)
W2091 (X4072)
(W4060)
(HOME POSITION
RIGHT DCS)
W2090 (X4070)
(W4059)
(HOME POSITION
LEFT DCS)
W2714
DESIGN
CORRECTION RIGHT
W2724
W2715
DESIGN CORRECTION LEFT
W2725
W4052
W4053
W4052
LUBRIFICATION PRESSURE
W4053
NO LUBRIFICATION OIL
TANK LOW/HIGH LEVEL
B
D
A
(W4014)
(DESIGN CORRECTION
PHOTOCELL BAR CODE 1)
(W4015)
(DESIGN CORRECTION
PHOTOCELL BAR CODE 2)
(W2236)
(W2237)
(W2248)
(W2249)
(W2208)
(W2209)
2529410-2
310049

Pos	Part No	UN	Qty	Description	Page No
Common Parts (Cont'd)					
W2734	90459-2577		1	MOTOR BRAKE CABLE 2090-UXNBMP-18S15	
W2735	90459-2577		1	MOTOR BRAKE CABLE 2090-UXNBMP-18S15	
W4016	90220-0165	MM	8200	SCR. CABLE 5X0,34MM2	
W4017	90220-0165	MM	8200	SCR. CABLE 5X0,34MM2	
W4052	351150-0403	MM	3200	CABLE OLFLEX 3X0,75 MM2 LIGHT/GREY	
W4053	351150-0404	MM	3200	CABLE OLFLEX 4X0,75 MM2 LIGHT/GREY	
X2710	90459-2551		1	CONNECTOR, MOTOR FEEDBACK 15 PIN MALE	
X2711	90459-2551		1	CONNECTOR, MOTOR FEEDBACK 15 PIN MALE	
X2712	90459-2551		1	CONNECTOR, MOTOR FEEDBACK 15 PIN MALE	
X2713	90459-2551		1	CONNECTOR, MOTOR FEEDBACK 15 PIN MALE	
X2714	90459-2551		1	CONNECTOR, MOTOR FEEDBACK 15 PIN MALE	
X2715	90459-2551		1	CONNECTOR, MOTOR FEEDBACK 15 PIN MALE	
X610	90458-1178		1	FRAME CF 8	
X611	90458-1178		1	FRAME CF 8	
X612	90458-1178		1	FRAME CF 8	
X613	90458-1178		1	FRAME CF 8	

Pos	Part No	UN	Qty	Description	Page No

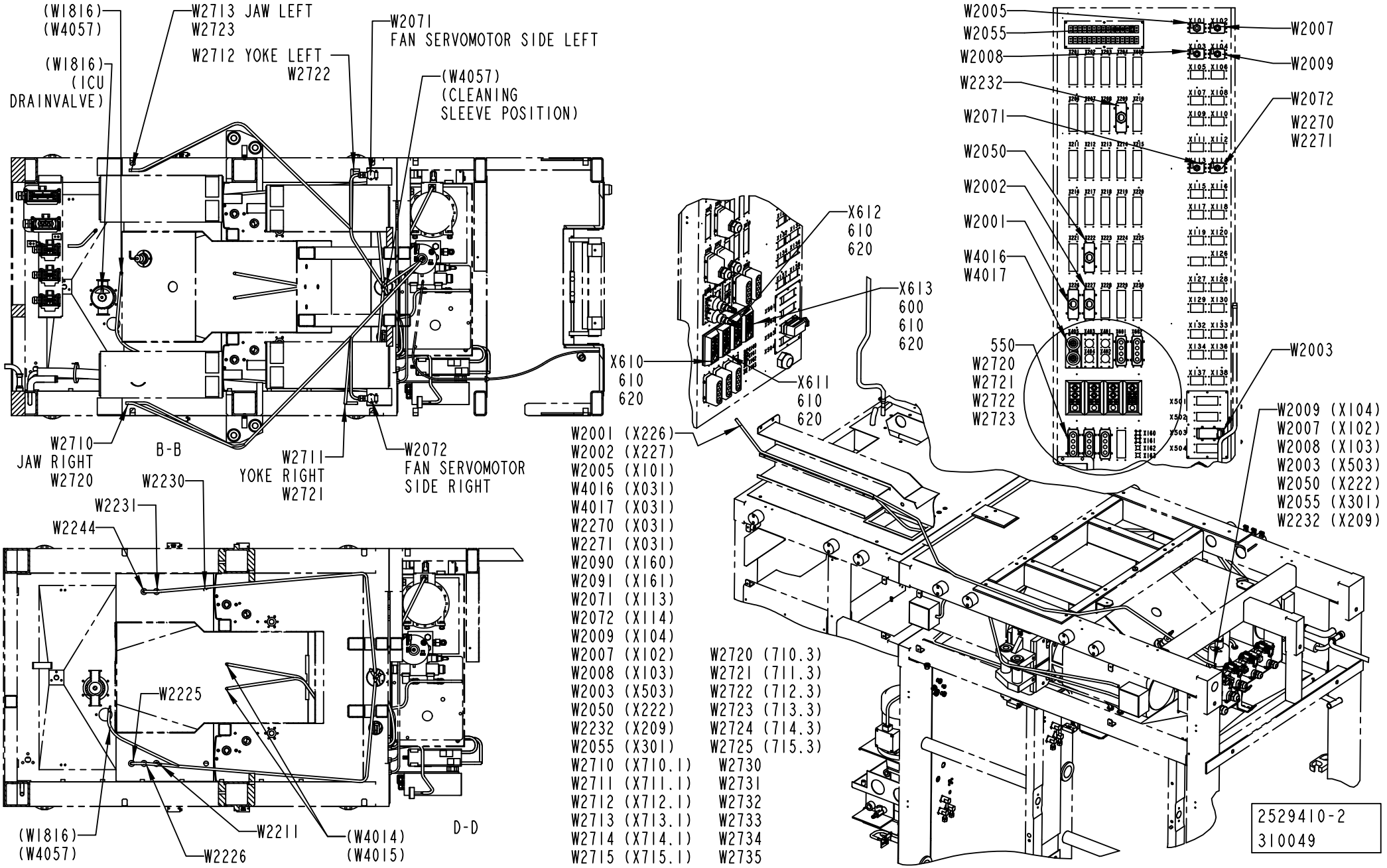
(W1816)
(W4057)
W2713 JAW LEFT
W2723
W2712 YOKE LEFT
W2722
W2071
FAN SERVOMOTOR SIDE LEFT
(W1816)
(ICU
DRAINVALVE)
(W4057)
(CLEANING
SLEEVE POSITION)
W2710
JAW RIGHT
W2720
B-B
W2711
YOKE RIGHT
W2721
W2072
FAN SERVOMOTOR
SIDE RIGHT
W2230
W2231
W2244
W2225
(W1816)
(W4057)
W2211
W2226
(W4014)
(W4015)
D-D
X612
610
620
X613
600
610
620
X610
610
620
X611
610
620
W2005
W2055
W2008
W2232
W2071
W2050
W2002
W2001
W4016
W4017
550
W2720
W2721
W2722
W2723
W2007
W2009
W2072
W2270
W2271
W2003
W2001 (X226)
W2002 (X227)
W2005 (X101)
W4016 (X031)
W4017 (X031)
W2270 (X031)
W2271 (X031)
W2090 (X160)
W2091 (X161)
W2071 (X113)
W2072 (X114)
W2009 (X104)
W2007 (X102)
W2008 (X103)
W2003 (X503)
W2050 (X222)
W2232 (X209)
W2055 (X301)
W2710 (X710.1)
W2711 (X711.1)
W2712 (X712.1)
W2713 (X713.1)
W2714 (X714.1)
W2715 (X715.1)
W2720 (710.3)
W2721 (711.3)
W2722 (712.3)
W2723 (713.3)
W2724 (714.3)
W2725 (715.3)
W2730
W2731
W2732
W2733
W2734
W2735
W2009 (X104)
W2007 (X102)
W2008 (X103)
W2003 (X503)
W2050 (X222)
W2055 (X301)
W2232 (X209)
2529410-2
310049

ECM: 340554 - 20080403
Group number: 2529410-0150
Assembly Drawing: 2529410-2_3_AD

This list covers pages from 2-116 to 2-123

Pos	Part No	UN	Qty	Description	Page No
SEE PREVIOUS LISTS PAGES: 2-117, 2-119.					

Pos	Part No	UN	Qty	Description	Page No

VALID FOR TGA ONLY

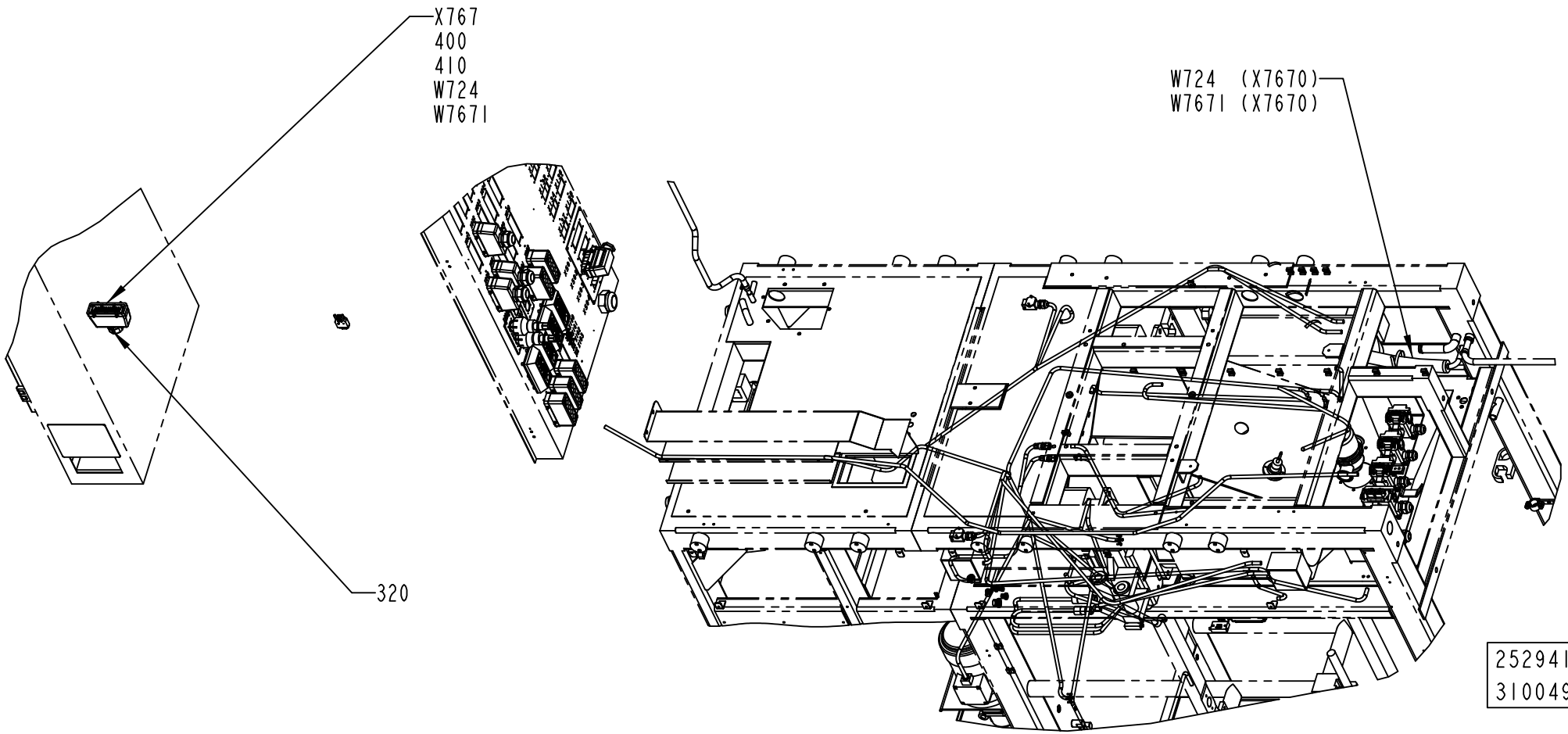

Pos	Part No	UN	Qty	Description	Page No
SEE PREVIOUS LISTS PAGES: 2-117, 2-119.					

Pos	Part No	UN	Qty	Description	Page No

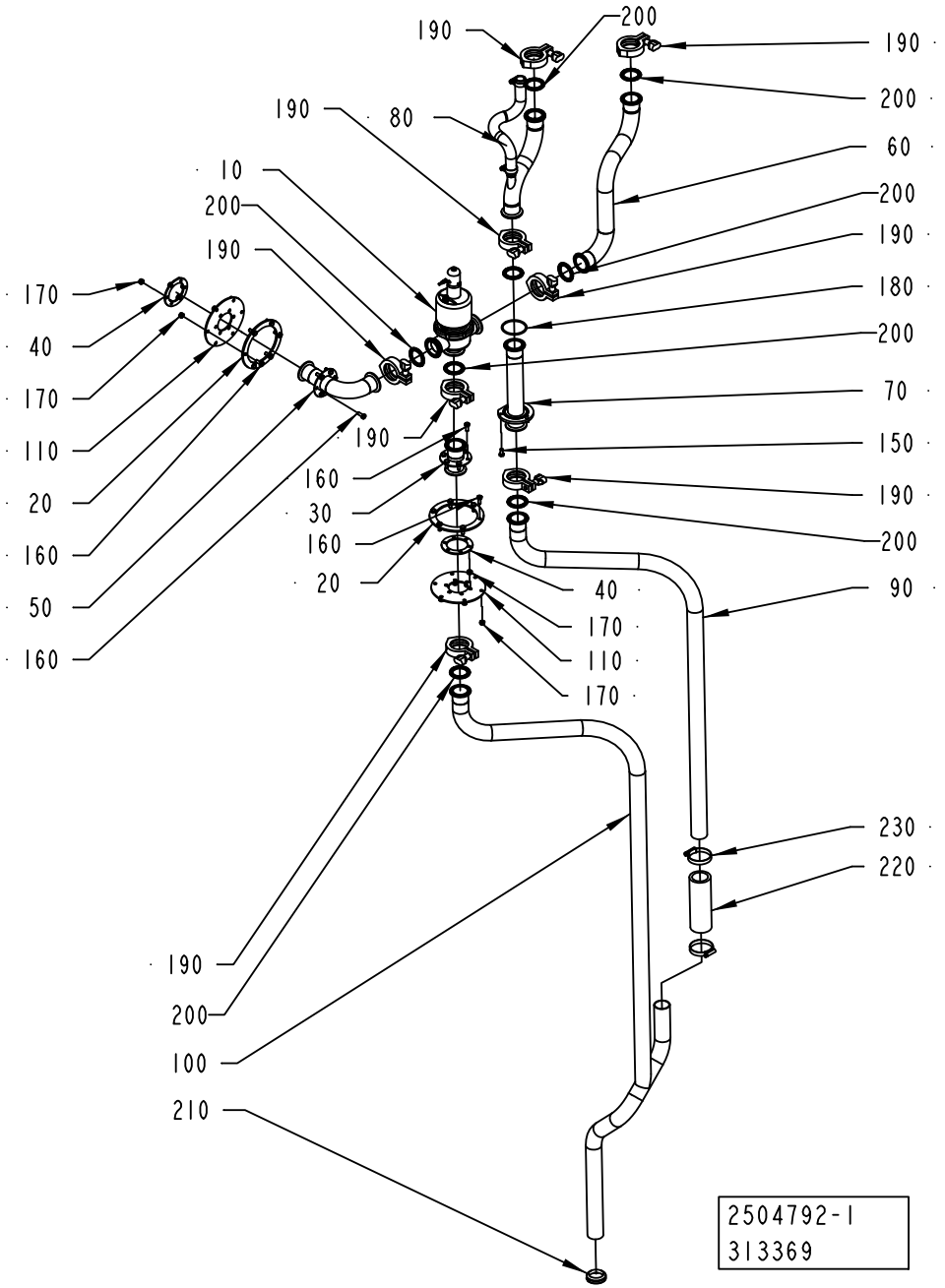
190
200
190
190
80
200
60
10
200
200
190
190
180
170
200
40
70
170
150
110
190
20
200
160
90
50
40
160
170
110
170
230
220
190
200
100
210
2504792-1
313369

ECM: 366165 - 20081002
Group number: 2504792-0100
Assembly Drawing: 2504792-1_1_AB

Pos	Part No	UN	Qty	Description	Page No
A3/FLEX					
080	2869180-0100		1	DRAIN PIPE	**2-127**
Common Parts					
010	2500088-0100		1	3-WAY VALVE	**2-129**
020	1498856-0000		2	FLANGE	
030	1498857-0000		1	CONNECTION	
040	1498858-0000		2	FLANGE	
050	2509544-0000		1	PIPE	
060	2509545-0000		1	PIPE	
070	2509546-0000		1	CONNECTION	
090	2594647-0000		1	PIPE	
100	2594646-0000		1	PIPE	
110	1498855-0000		2	GASKET	
150	312105-0367		3	SCREW M6S ISO 4017 M6X14 A480	
160	312105-0368		24	SCREW M6S ISO 4017 M6X16 A480	
170	312812-0316		24	HEXAGON NUT, NY-LOCK M6 A480	
180	315202-0302		1	O-RING 54,5X3 MM	
190	342840-0103		8	CLAMPING PIECE	
200	342850-0304		8	GASKET 35,4X49,1X5,2 1"1/2 FDA	
210	315220-0183		1	V-RINGS 36X46X13 MM V-40S	
220	90166-0236	M	0.2	HOSE, 38/51 REINFORCED RUBBER	
230	342991-0109		2	HOSE CLIP,WORM DRIVE TYPE (48)-50	

Pos	Part No	UN	Qty	Description	Page No

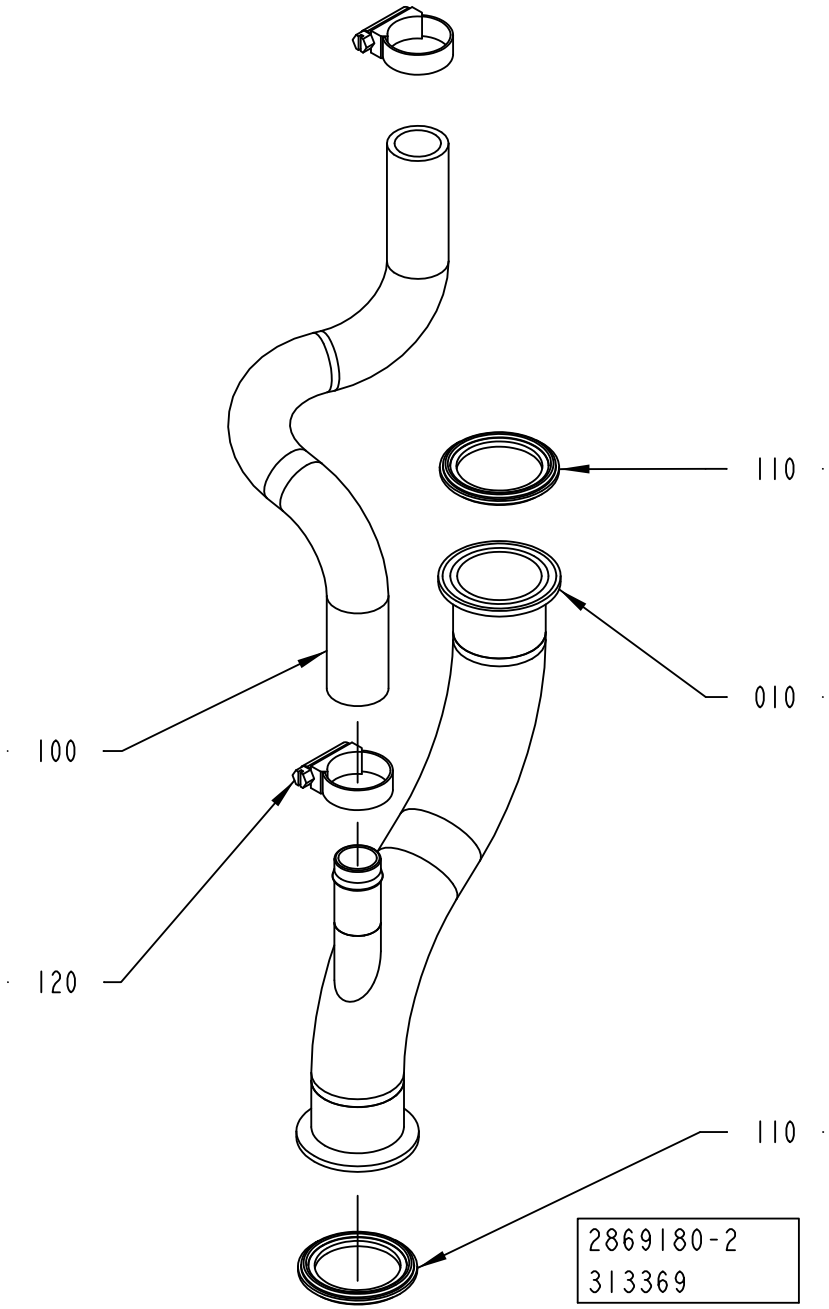
110
010
100
120
110
2869180-2
313369

ECM: 313369 - 20070628
Group number: 2869180-0100
Assembly Drawing: 2869180-2_1_AA

Pos	Part No	UN	Qty	Description	Page No
A3/FLEX					
010	2833352-0000		1	PIPE	
Common Parts					
100	90458-2752	MM	500	PLASTIC HOSE, 3/4"X1"	
110	342850-0304		2	GASKET 35,4X49,1X5,2 1"1/2 FDA	
120	342991-0104		2	HOSE CLIP,WORM DRIVE TYPE (23)-27	

Pos	Part No	UN	Qty	Description	Page No

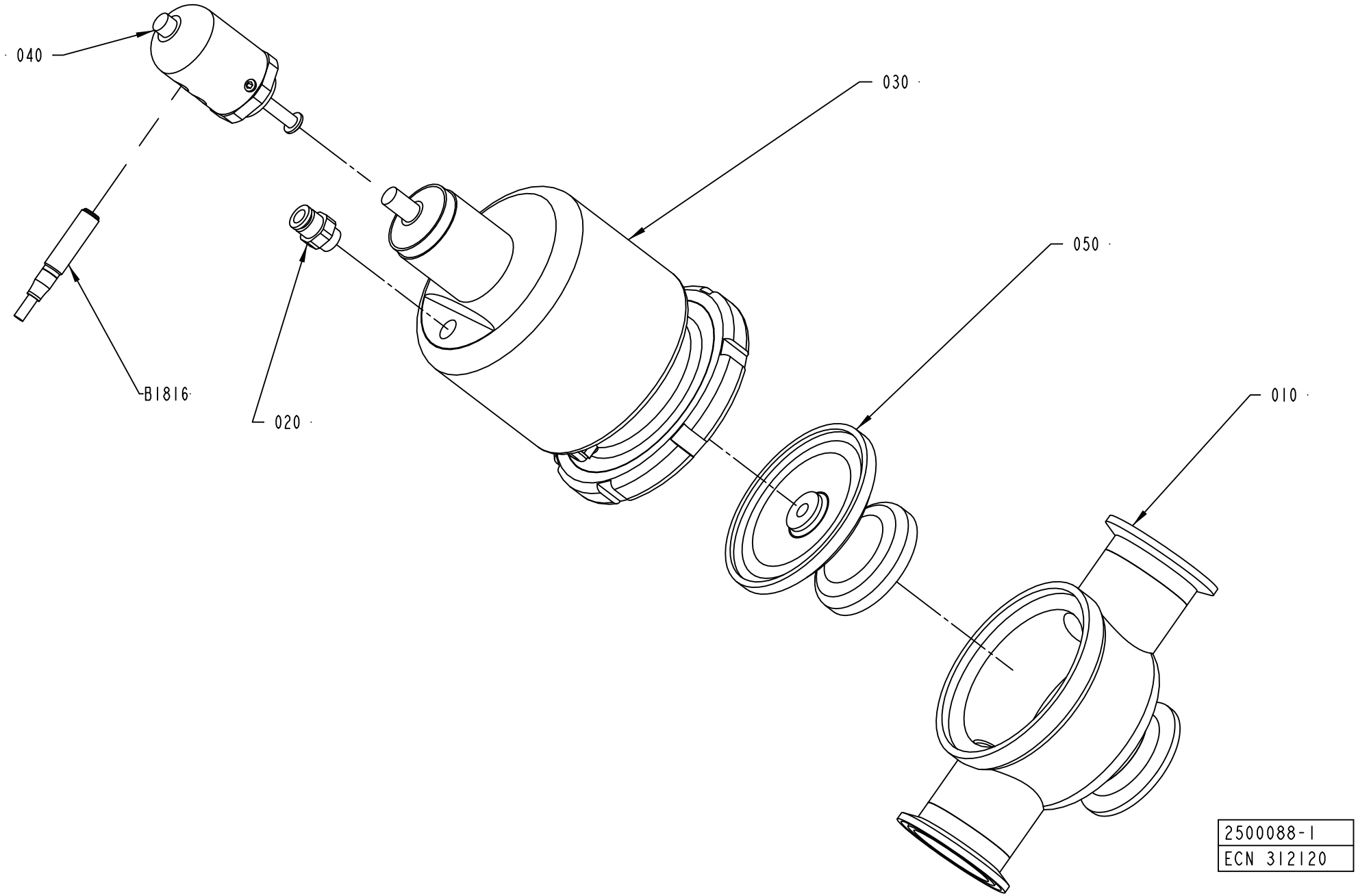
040
030
050
010
B1816
020
2500088-1
ECN 312120

ECM: 342899 - 20080402
Group number: 2500088-0100
Assembly Drawing: 2500088-1_1_AC

Pos	Part No	UN	Qty	Description	Page No
-					
010	2501292-0000		1	VALVE HOUSING	
020	342722-0202		1	PIPE COUPLING 1/8" D=6MM	
030	90458-1531		1	ACTUATOR, N.O., PA 38/100	
	90458-1533		*1*	*LOCK RING N7-29, FOR PA 38*	
	90458-1534		*1*	*SILENCER N4-23, FOR PA 38/100*	
040	90458-1537		1	HOLDER FOR SENSORS, PA38/PO-TET-PTFE	
050	90458-1541		1	DIAPHRAGM, NA 38/25 PFTE	
	90458-1542		*1*	*SUPPORT FOR NA 38/25 DIAPHRAGM*	
B1816	90600-0473		1	INDUCTIVE SWITCH E2A-S08KS01-WP-B1-TP 5M	

Pos	Part No	UN	Qty	Description	Page No

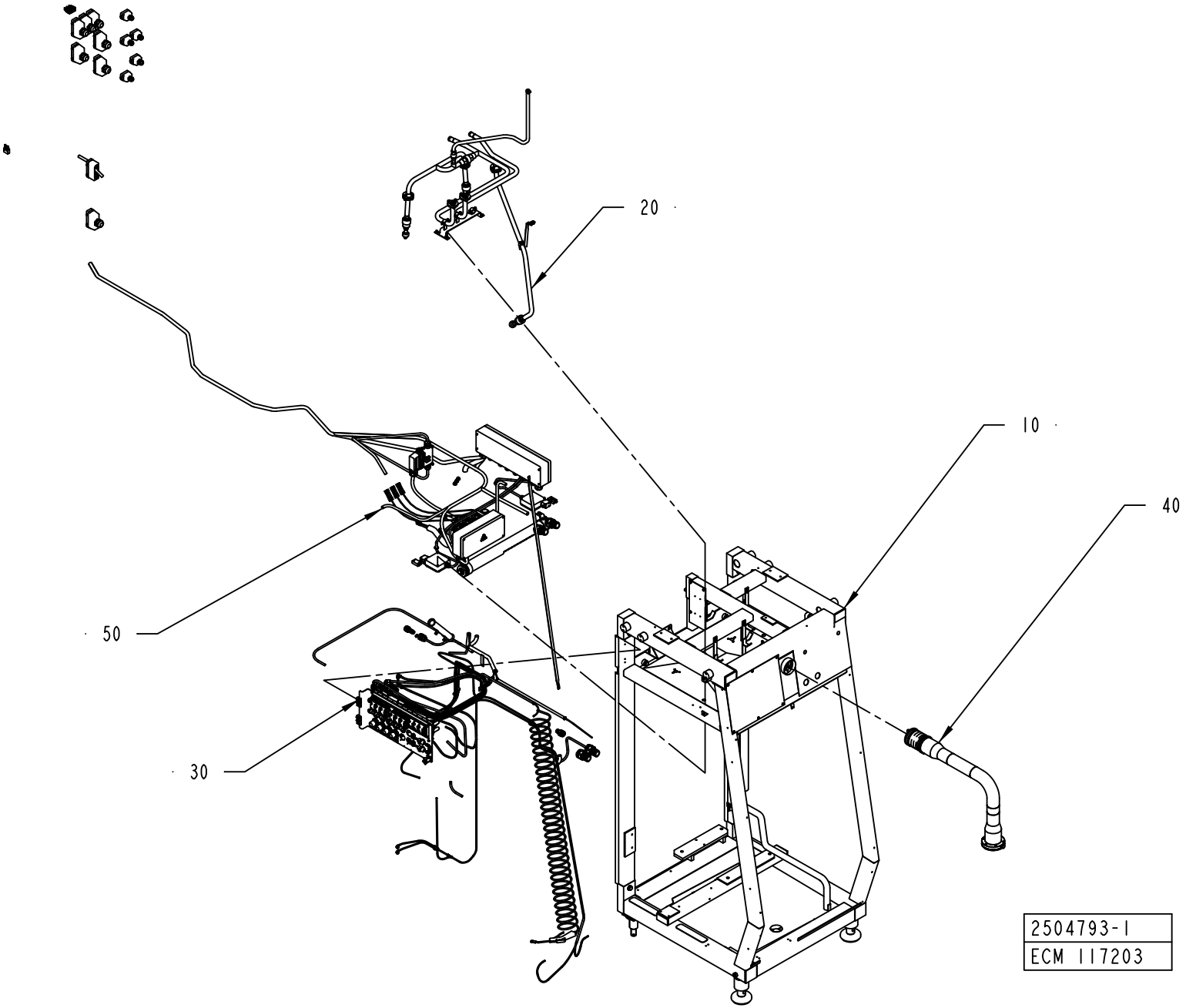
20
10
40
50
30
2504793-1
ECM 117203

ECM: 274236 - 20061101
Group number: 2504793-0150
Assembly Drawing: 2504793-1_1_AA

Pos	Part No	UN	Qty	Description	Page No
-					
010	2504794-0100		1	MACHINE BODY	**2-133, 2-135, 2-137**
020	2504795-0100		1	CLEANING SYSTEM	**2-145, 2-147**
030	2528044-0100		1	PNEUMATIC SYSTEM	**2-149, 2-151**
040	1095863-0200		1	PIVOT ARM	**2-179**
050	2527300-0150		1	ELECTRIC EQUIPMENT	**2-183**

Pos	Part No	UN	Qty	Description	Page No

MACHINE BODY

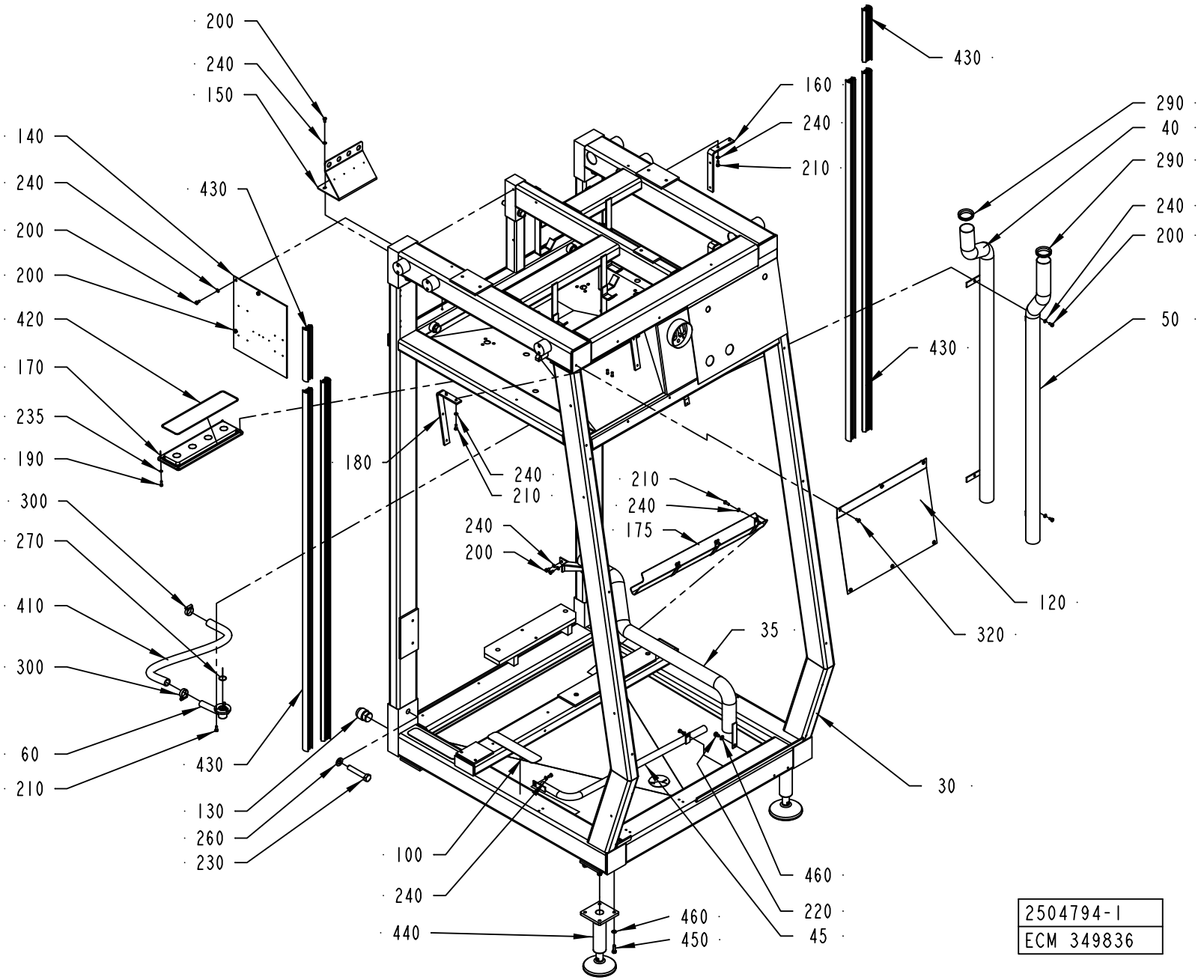

ECM: 352563 - 20081001
Group number: 2504794-0100
Assembly Drawing: 2504794-1_1_AE

This list covers pages from 2-132 to 2-137

Pos	Part No	UN	Qty	Description	Page No
A3/FLEX TGA (See drawing on pages: 2-134, 2-136)					
020	2817754-0100		1	CABLE DUCT	**2-139**
025	2807190-0100		1	PLATE	**2-141**
030	2810647-0000		1	FRAME	
035	2792844-0000		1	PIPE	
040	2792827-0000		2	PIPE	
045	2792841-0000		1	PIPE	
080	2792828-0000		1	ANGLE	
090	2827935-0000		2	SEALING STRIP	
105	2830238-0100		1	COVER	**2-143**
110	2827936-0000		1	SEALING STRIP	
120	2792839-0000		1	COVER PLATE	
200	312105-0366		6	SCREW M6S ISO 4017 M6X12 A480	
210	312105-0368		7	SCREW M6S ISO 4017 M6X16 A480	
240	315105-0153		10	WASHER BRB 6,4X12 RFR	
290	315220-0225		2	V-RINGS 67X79X15,5 MM V-75S	
310	311103-0401		6	PARALLEL PIN ISO 2338 8M6X20 A1	
315	312605-0316		1	HEXAGON NUT, M6M M6 A280	
370	315220-0198		3	V-RINGS 45X55X13 MM V-50S	
385	315237-0110		1	WASHER,PL.RND.AL.13,5/18,H=1,5	
460	315105-0165		8	WASHER BRB 8,4X16 RFR	
470	352103-0110		2	CABLE GLAND, STR 16, PR22,5/PG16	
500	90099-0110		2	NUT, PR 22,5 (PG16)	
510	90330-0026		1	PLUG, EXT. G-THREAD, G1/4	
520	90002-0013		2	BLANK-OFF PLUG, PR 15,2 SKINDICHT-BLK9	
530	90099-0104		2	NUT, PR 15,2 (PG9)	
540	90143-0060	MM	100	EDGE STRIP 9,5X6,3MM BLACK PVC	
A3/FLEX TBA, A3/FLEX TPA (See drawing on page: 2-132)					
030	2504437-0000		1	FRAME	
035	2530300-0000		1	PIPE	
040	2530301-0000		1	PIPE	
045	2530303-0000		1	PIPE	
050	2530302-0000		1	PIPE	
120	2510785-0000		1	COVER PLATE	
150	2509941-0000		1	SUPPORT	
160	2520431-0000		2	SUPPORT	
175	2529169-0000		1	HOLDER	
180	2520430-0000		2	HOLDER	
200	312105-0366		12	SCREW M6S ISO 4017 M6X12 A480	
210	312105-0368		14	SCREW M6S ISO 4017 M6X16 A480	
220	312105-0447		1	SCREW M6S ISO 4017 M8X12 A480	
240	315105-0153		23	WASHER BRB 6,4X12 RFR	
250	315105-0165		1	WASHER BRB 8,4X16 RFR	
290	315220-0198		2	V-RINGS 45X55X13 MM V-50S	
460	315105-0165		9	WASHER BRB 8,4X16 RFR	
Common Parts					
060	2509552-0000		1	DRAINING	
100	1103300-0000		3	NON-SKID	
130	2506636-0000		2	PIN	
140	2506921-0000		1	SUPPORT	
170	2661082-0000		1	PLATE	
190	312105-0329		4	SCREW M6S ISO 4017 M5X16 A480	
230	312105-0638		7	SCREW M6S ISO 4014 M16X90 A480	
235	315105-0146		4	WASHER BRB 5,3X10 RFR	
260	315105-0186		7	WASHER BRB 17X30 RFR	
270	315202-0709		1	O-RING 23,52X1,78 MM	
300	342991-0105		2	HOSE CLIP,WORM DRIVE TYPE (27)-30	
320	90287-0075		6	SCREW SLOT. PAN HEAD LKCS M6X12	
410	90166-0151	MM	610	HOSE	
420	90161-0001	MM	800	O-RING MATERIAL 3 MM	
430	90459-1009	MM	7000	RUBBER STRIP, 1025088988	
440	90600-0724		2	FOOT 25000N, R0773 611223	
450	312105-0453		8	SCREW M6S ISO 4017 M8X25 A480	
550	90143-0060	MM	800	EDGE STRIP 9,5X6,3MM BLACK PVC	

Machine Type | Group Description | Used-In | Group Number | Page No

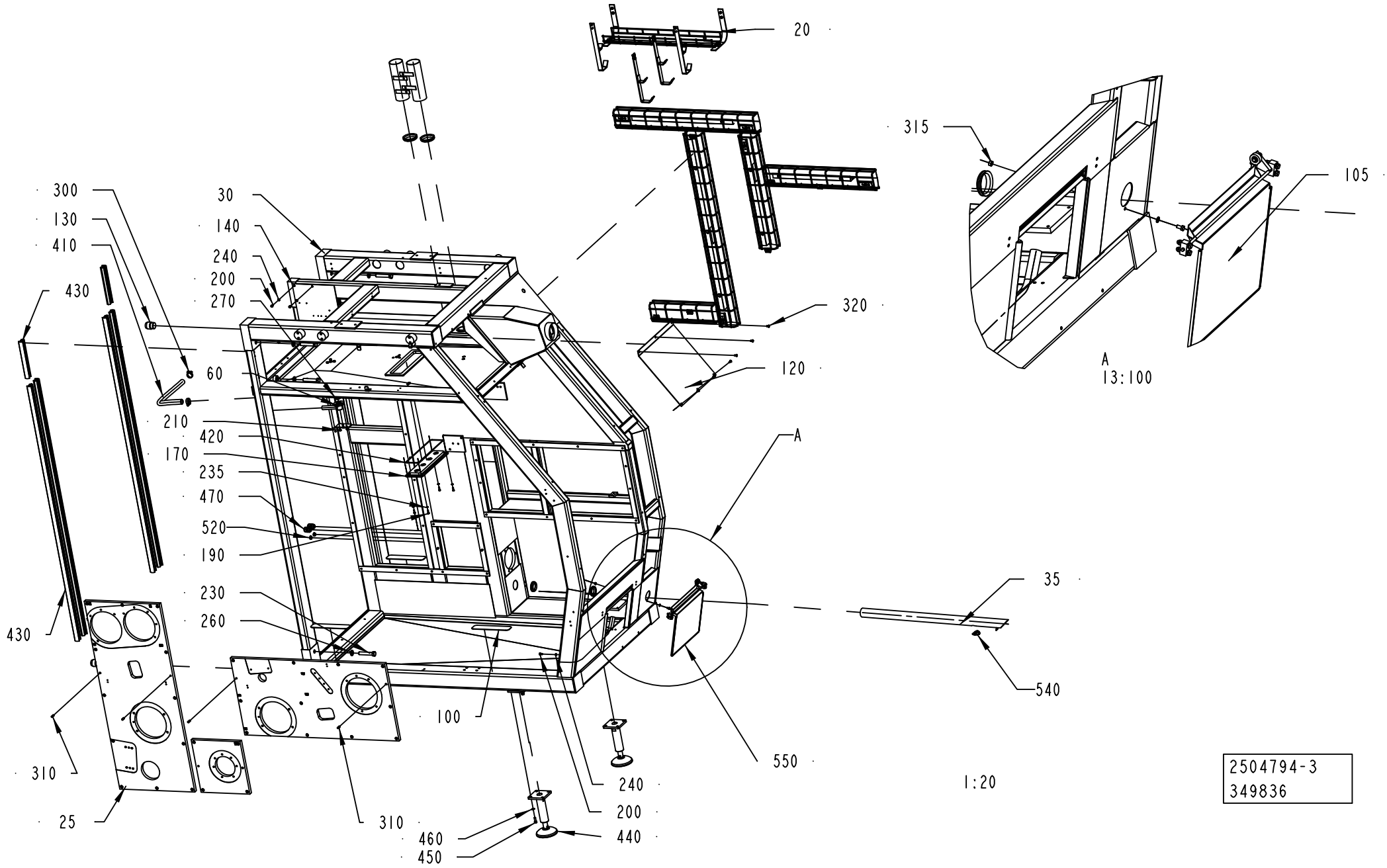
20
315
105
300
130
410
430
30
140
240
200
270
320
120
60
210
420
170
235
470
520
190
230
260
A
35
540
430
100
550
310
25
310
460
450
240
200
440
A
13:100
1:20
2504794-3
349836

ECM: 352563 - 20081001
Group number: 2504794-0100
Assembly Drawing: 2504794-3_1_AD

This list covers pages from 2-132 to 2-137

Pos	Part No	UN	Qty	Description	Page No
A3/FLEX TGA (See drawing on pages: 2-134, 2-136)					
020	2817754-0100		1	CABLE DUCT	**2-139**
025	2807190-0100		1	PLATE	**2-141**
030	2810647-0000		1	FRAME	
035	2792844-0000		1	PIPE	
040	2792827-0000		2	PIPE	
045	2792841-0000		1	PIPE	
080	2792828-0000		1	ANGLE	
090	2827935-0000		2	SEALING STRIP	
105	2830238-0100		1	COVER	**2-143**
110	2827936-0000		1	SEALING STRIP	
120	2792839-0000		1	COVER PLATE	
200	312105-0366		6	SCREW M6S ISO 4017 M6X12 A480	
210	312105-0368		7	SCREW M6S ISO 4017 M6X16 A480	
240	315105-0153		10	WASHER BRB 6,4X12 RFR	
290	315220-0225		2	V-RINGS 67X79X15,5 MM V-75S	
310	311103-0401		6	PARALLEL PIN ISO 2338 8M6X20 A1	
315	312605-0316		1	HEXAGON NUT, M6M M6 A280	
370	315220-0198		3	V-RINGS 45X55X13 MM V-50S	
385	315237-0110		1	WASHER,PL.RND.AL.13,5/18,H=1,5	
460	315105-0165		8	WASHER BRB 8,4X16 RFR	
470	352103-0110		2	CABLE GLAND, STR 16, PR22,5/PG16	
500	90099-0110		2	NUT, PR 22,5 (PG16)	
510	90330-0026		1	PLUG, EXT. G-THREAD, G1/4	
520	90002-0013		2	BLANK-OFF PLUG, PR 15,2 SKINDICHT-BLK9	
530	90099-0104		2	NUT, PR 15,2 (PG9)	
540	90143-0060	MM	100	EDGE STRIP 9,5X6,3MM BLACK PVC	
A3/FLEX TBA, A3/FLEX TPA (See drawing on page: 2-132)					
030	2504437-0000		1	FRAME	
035	2530300-0000		1	PIPE	
040	2530301-0000		1	PIPE	
045	2530303-0000		1	PIPE	
050	2530302-0000		1	PIPE	
120	2510785-0000		1	COVER PLATE	
150	2509941-0000		1	SUPPORT	
160	2520431-0000		2	SUPPORT	
175	2529169-0000		1	HOLDER	
180	2520430-0000		2	HOLDER	
200	312105-0366		12	SCREW M6S ISO 4017 M6X12 A480	
210	312105-0368		14	SCREW M6S ISO 4017 M6X16 A480	
220	312105-0447		1	SCREW M6S ISO 4017 M8X12 A480	
240	315105-0153		23	WASHER BRB 6,4X12 RFR	
250	315105-0165		1	WASHER BRB 8,4X16 RFR	
290	315220-0198		2	V-RINGS 45X55X13 MM V-50S	
460	315105-0165		9	WASHER BRB 8,4X16 RFR	
Common Parts					
060	2509552-0000		1	DRAINING	
100	1103300-0000		3	NON-SKID	
130	2506636-0000		2	PIN	
140	2506921-0000		1	SUPPORT	
170	2661082-0000		1	PLATE	
190	312105-0329		4	SCREW M6S ISO 4017 M5X16 A480	
230	312105-0638		7	SCREW M6S ISO 4014 M16X90 A480	
235	315105-0146		4	WASHER BRB 5,3X10 RFR	
260	315105-0186		7	WASHER BRB 17X30 RFR	
270	315202-0709		1	O-RING 23,52X1,78 MM	
300	342991-0105		2	HOSE CLIP,WORM DRIVE TYPE (27)-30	
320	90287-0075		6	SCREW SLOT. PAN HEAD LKCS M6X12	
410	90166-0151	MM	610	HOSE	
420	90161-0001	MM	800	O-RING MATERIAL 3 MM	
430	90459-1009	MM	7000	RUBBER STRIP, 1025088988	
440	90600-0724		2	FOOT 25000N, R0773 611223	
450	312105-0453		8	SCREW M6S ISO 4017 M8X25 A480	
550	90143-0060	MM	800	EDGE STRIP 9,5X6,3MM BLACK PVC	

Machine Type | Group Description | Used-In | Group Number | Page No

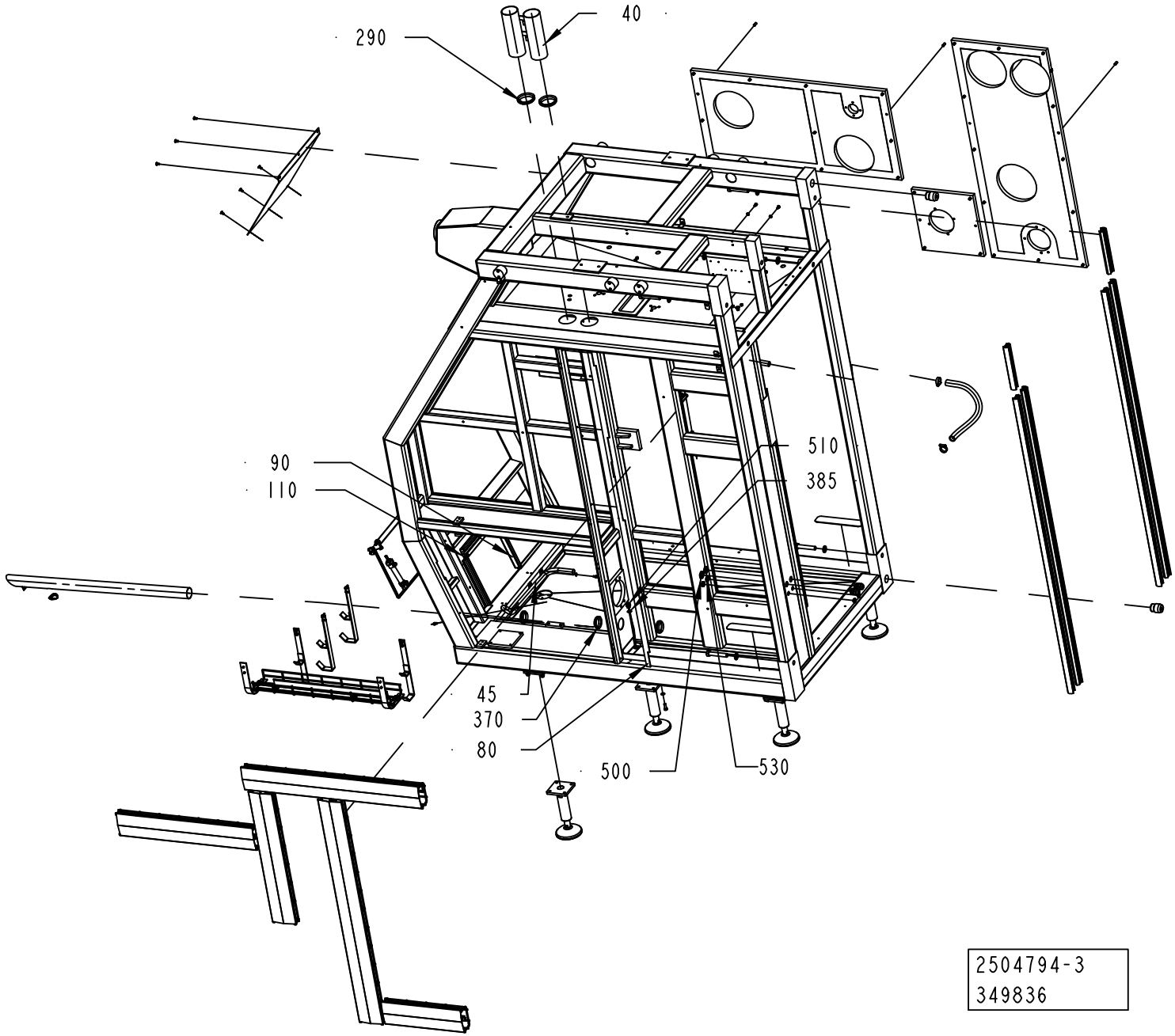
40
290
90
110
510
385
45
370
80
500
530
2504794-3
349836

ECM: 352563 - 20081001
Group number: 2504794-0100
Assembly Drawing: 2504794-3_2_AD

This list covers pages from 2-132 to 2-137

Pos	Part No	UN	Qty	Description	Page No
A3/FLEX TGA (See drawing on pages: 2-134, 2-136)					
020	2817754-0100		1	CABLE DUCT	**2-139**
025	2807190-0100		1	PLATE	**2-141**
030	2810647-0000		1	FRAME	
035	2792844-0000		1	PIPE	
040	2792827-0000		2	PIPE	
045	2792841-0000		1	PIPE	
080	2792828-0000		1	ANGLE	
090	2827935-0000		2	SEALING STRIP	
105	2830238-0100		1	COVER	**2-143**
110	2827936-0000		1	SEALING STRIP	
120	2792839-0000		1	COVER PLATE	
200	312105-0366		6	SCREW M6S ISO 4017 M6X12 A480	
210	312105-0368		7	SCREW M6S ISO 4017 M6X16 A480	
240	315105-0153		10	WASHER BRB 6,4X12 RFR	
290	315220-0225		2	V-RINGS 67X79X15,5 MM V-75S	
310	311103-0401		6	PARALLEL PIN ISO 2338 8M6X20 A1	
315	312605-0316		1	HEXAGON NUT, M6M M6 A280	
370	315220-0198		3	V-RINGS 45X55X13 MM V-50S	
385	315237-0110		1	WASHER,PL.RND.AL.13,5/18,H=1,5	
460	315105-0165		8	WASHER BRB 8,4X16 RFR	
470	352103-0110		2	CABLE GLAND, STR 16, PR22,5/PG16	
500	90099-0110		2	NUT, PR 22,5 (PG16)	
510	90330-0026		1	PLUG, EXT. G-THREAD, G1/4	
520	90002-0013		2	BLANK-OFF PLUG, PR 15,2 SKINDICHT-BLK9	
530	90099-0104		2	NUT, PR 15,2 (PG9)	
540	90143-0060	MM	100	EDGE STRIP 9,5X6,3MM BLACK PVC	
A3/FLEX TBA, A3/FLEX TPA (See drawing on page: 2-132)					
030	2504437-0000		1	FRAME	
035	2530300-0000		1	PIPE	
040	2530301-0000		1	PIPE	
045	2530303-0000		1	PIPE	
050	2530302-0000		1	PIPE	
120	2510785-0000		1	COVER PLATE	
150	2509941-0000		1	SUPPORT	
160	2520431-0000		2	SUPPORT	
175	2529169-0000		1	HOLDER	
180	2520430-0000		2	HOLDER	
200	312105-0366		12	SCREW M6S ISO 4017 M6X12 A480	
210	312105-0368		14	SCREW M6S ISO 4017 M6X16 A480	
220	312105-0447		1	SCREW M6S ISO 4017 M8X12 A480	
240	315105-0153		23	WASHER BRB 6,4X12 RFR	
250	315105-0165		1	WASHER BRB 8,4X16 RFR	
290	315220-0198		2	V-RINGS 45X55X13 MM V-50S	
460	315105-0165		9	WASHER BRB 8,4X16 RFR	
Common Parts					
060	2509552-0000		1	DRAINING	
100	1103300-0000		3	NON-SKID	
130	2506636-0000		2	PIN	
140	2506921-0000		1	SUPPORT	
170	2661082-0000		1	PLATE	
190	312105-0329		4	SCREW M6S ISO 4017 M5X16 A480	
230	312105-0638		7	SCREW M6S ISO 4014 M16X90 A480	
235	315105-0146		4	WASHER BRB 5,3X10 RFR	
260	315105-0186		7	WASHER BRB 17X30 RFR	
270	315202-0709		1	O-RING 23,52X1,78 MM	
300	342991-0105		2	HOSE CLIP,WORM DRIVE TYPE (27)-30	
320	90287-0075		6	SCREW SLOT. PAN HEAD LKCS M6X12	
410	90166-0151	MM	610	HOSE	
420	90161-0001	MM	800	O-RING MATERIAL 3 MM	
430	90459-1009	MM	7000	RUBBER STRIP, 1025088988	
440	90600-0724		2	FOOT 25000N, R0773 611223	
450	312105-0453		8	SCREW M6S ISO 4017 M8X25 A480	
550	90143-0060	MM	800	EDGE STRIP 9,5X6,3MM BLACK PVC	

Machine Type | Group Description | Used-In | Group Number | Page No

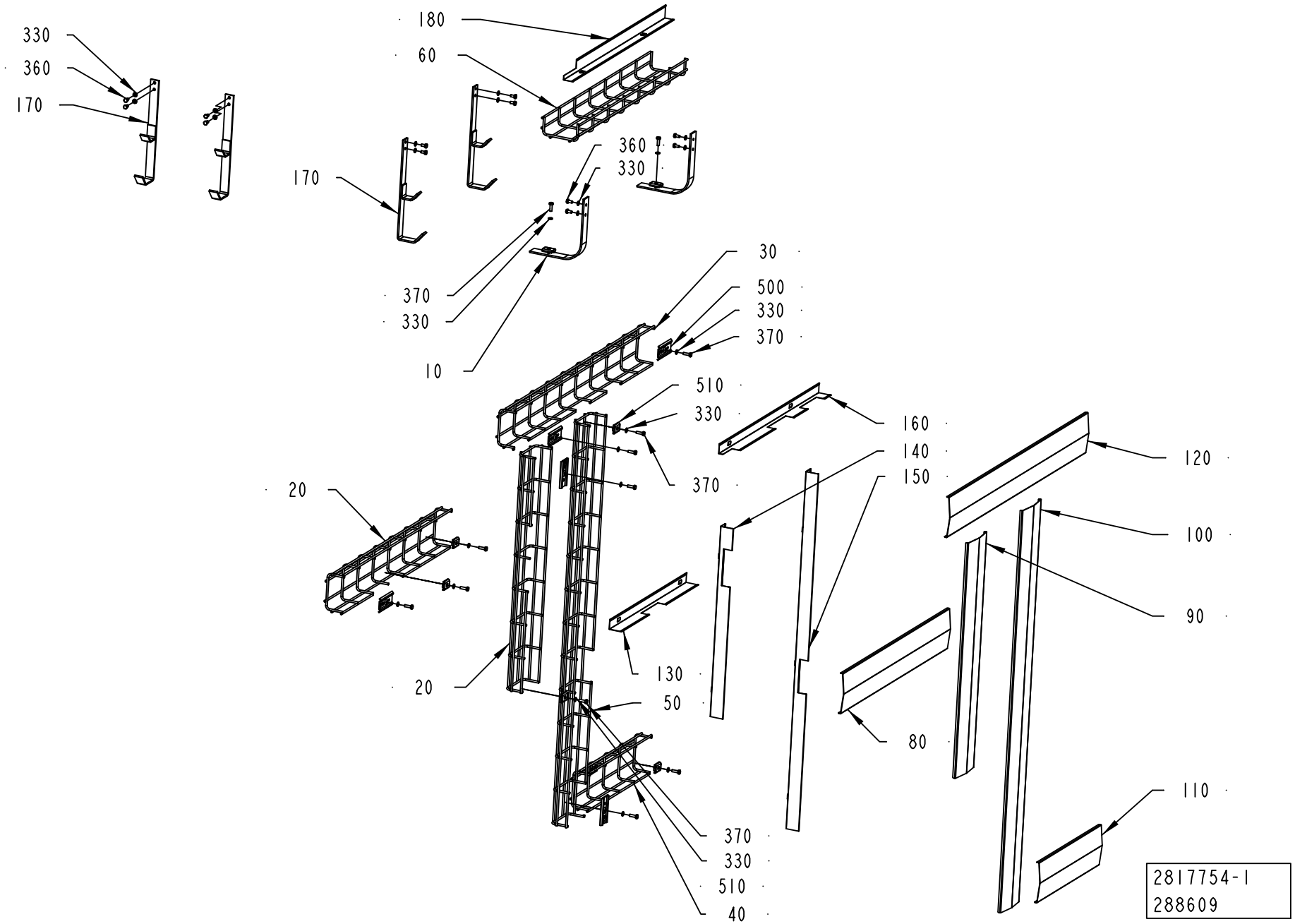
330
360
170
180
60
170
360
330
370
330
10
30
500
330
370
510
330
370
20
20
160
140
150
120
100
90
130
50
80
110
370
330
510
40
2817754-1
288609

ECM: 295617 - 20061227
Group number: 2817754-0100
Assembly Drawing: 2817754-1_1_AC

Pos	Part No	UN	Qty	Description	Page No
-					
010	2856533-0000		2	BRACKET	
020	2817750-0000		2	CABLE	
030	2817751-0000		1	CABLE	
040	2817752-0000		1	CABLE	
050	2817753-0000		1	CABLE	
060	2830240-0000		1	CABLE	
080	2817769-0000		1	LID	
090	2817770-0000		1	LID	
100	2817771-0000		1	LID	
110	2817772-0000		1	LID	
120	2817773-0000		1	LID	
130	2817745-0000		1	PLATE	
140	2817746-0000		1	PLATE	
150	2817747-0000		1	PLATE	
160	2817748-0000		1	PLATE	
170	2515217-0000		3	BRACKET	
180	2830239-0000		1	PLATE	
300	312605-0316		2	HEXAGON NUT, M6M M6 A280	
330	315105-0153		24	WASHER BRB 6,4X12 RFR	
360	312105-0366		12	SCREW M6S ISO 4017 M6X12 A480	
370	312101-0370		12	SCREW M6S M6X20 FZB	
500	90181-0182		7	CABLE TRENCH PARTS	
510	90181-0183		5	CABLE DUCT, FITTING, B2	

Pos	Part No	UN	Qty	Description	Page No

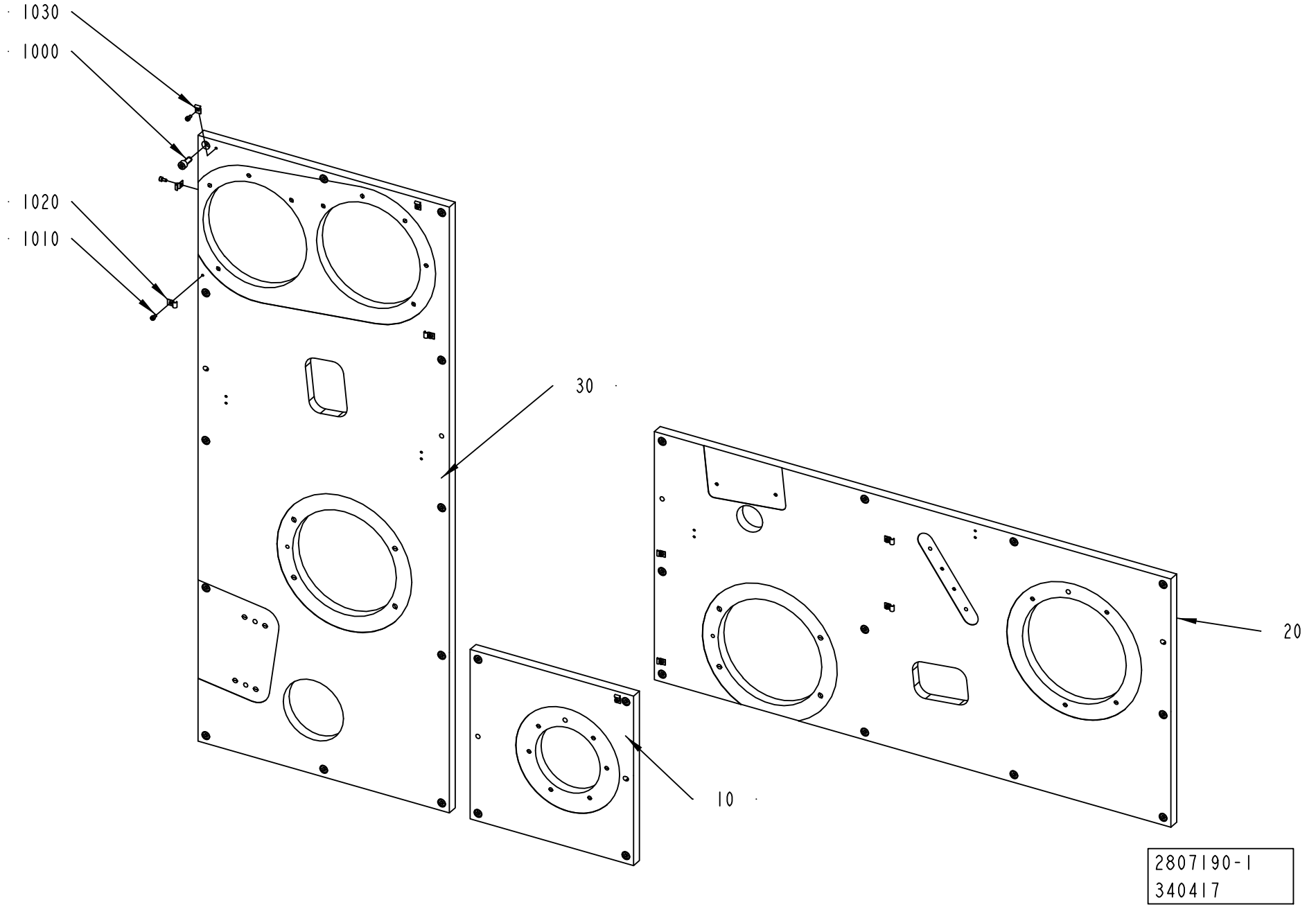
1030
1000
1020
1010
30
20
10
2807190-1
340417

ECM: 369821 - 20090101
Group number: 2807190-0100
Assembly Drawing: 2807190-1_1_AC

Pos	Part No	UN	Qty	Description	Page No
-					
010	2807161-0000		1	PLATE	
020	2807162-0000		1	PLATE	
030	2807163-0000		1	PLATE	
1000	312115-0451		31	SCREW ISO4762 M8X20 A4 80	
1010	312115-0285		10	SCREW ISO4762 M4X6 A4 80	
1020	90165-0056		7	PIPE CLIP FOR TUBE D=4 MM	
1030	90165-0058		2	PIPE CLIP FOR TUBE D=2,5 MM	
1040	90165-0057		1	PIPE CLIP FOR TUBE D=6 MM	

Pos	Part No	UN	Qty	Description	Page No

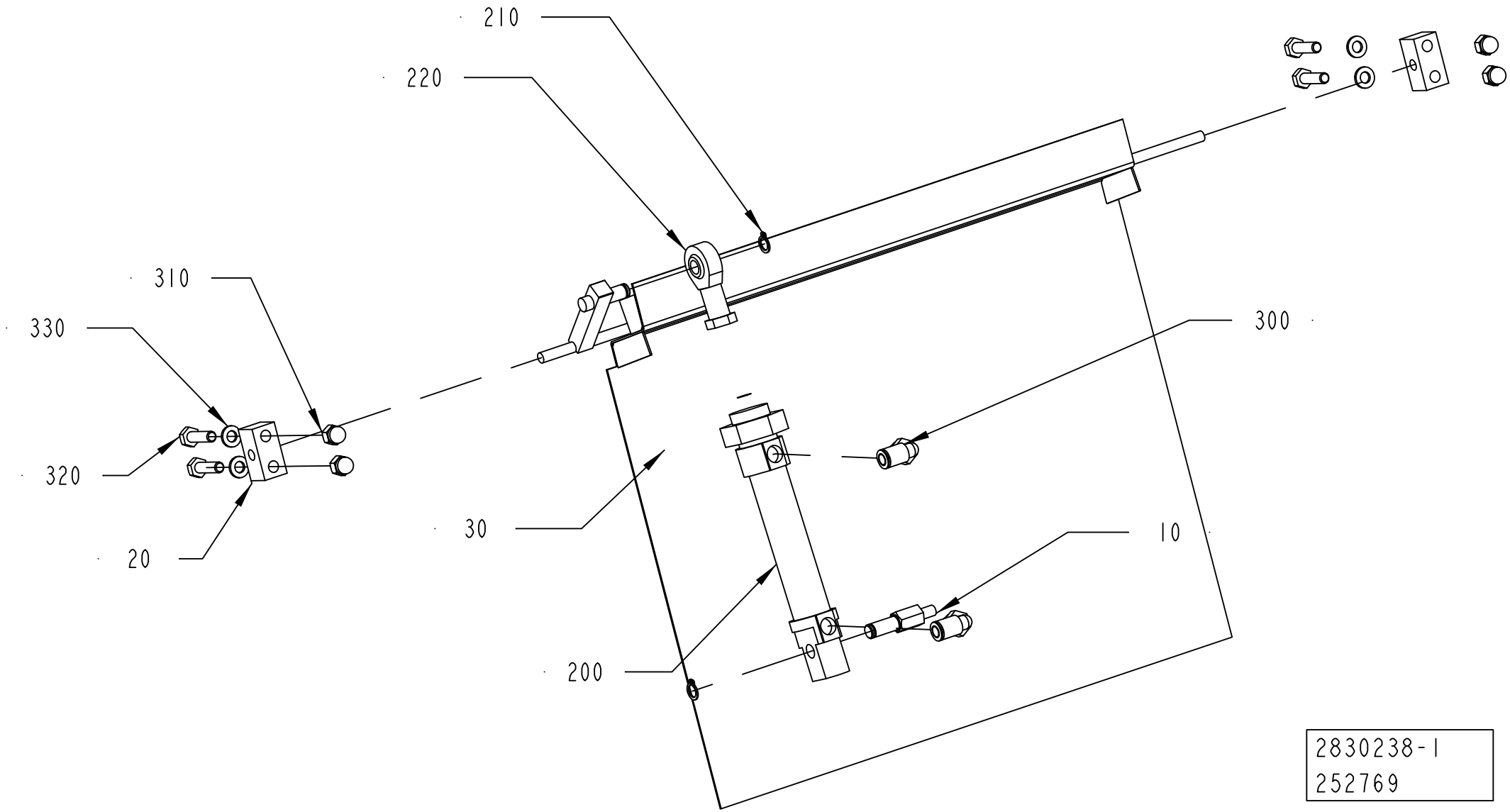
210
220
310
330
320
20
30
200
300
10
2830238-1
252769

ECM: 998706 - 20061104
Group number: 2830238-0100
Assembly Drawing: 2830238-1_1_AA

Pos	Part No	UN	Qty	Description	Page No
-					
010	2827937-0000		1	SHAFT	
020	2827933-0000		1	PALLET	
030	2827934-0000		2	PLATE	
200	90458-2102		1	DOUBLE ACTING, MINI-ISO, CYL. 20-50	
210	90141-0015		2	RETAINING RING FOR SHAFT DIN 471 8 SS	
220	90115-0139		1	ROD END, ID=8 MM, M8X1,25	
300	350002-0006		2	PUSH-IN L-FITTING QSL-F-G1/8-6	
310	312705-0316		4	NUT HEX. DOMED CAP MHM-6 M6 A280	
320	312105-0371		4	SCREW M6S ISO 4017 M6X22 A480	
330	315105-0153		4	WASHER BRB 6,4X12 RFR	

Pos	Part No	UN	Qty	Description	Page No

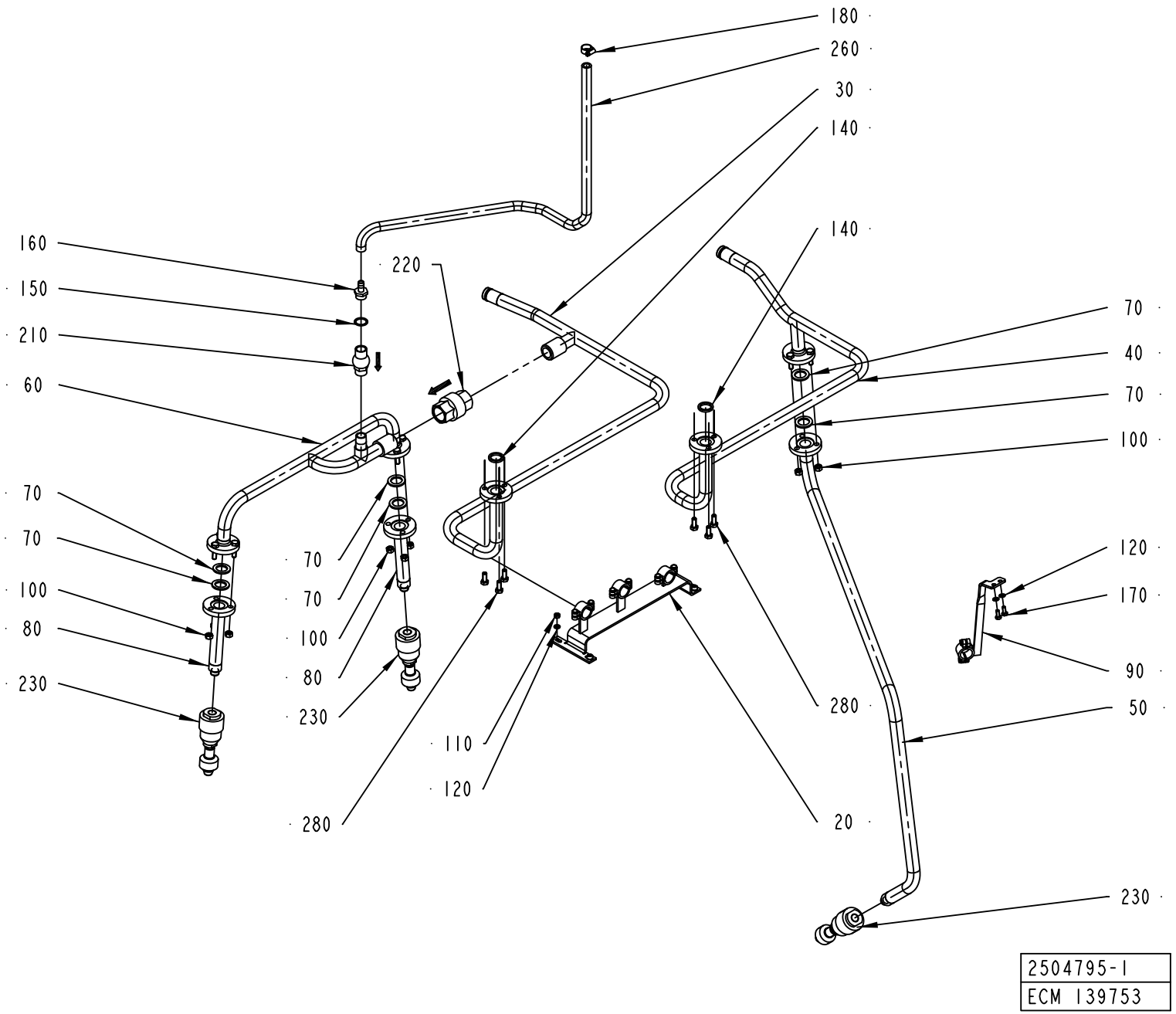
180
260
30
140
140
160
150
210
60
220
70
40
70
100
70
70
100
80
230
70
70
100
80
230
120
170
90
280
50
110
120
280
20
230
2504795-1
ECM 139753

ECM: 325192 - 20080101
Group number: 2504795-0100
Assembly Drawing: 2504795-1_1_AC

This list covers pages from 2-144 to 2-147

Pos	Part No	UN	Qty	Description	Page No
A3/FLEX TBA, A3/FLEX TPA (See drawing on page: 2-144)					
030	2506922-0000		1	PIPE	
040	2506923-0000		1	PIPE	
050	2506924-0000		1	PIPE	
060	2506925-0000		1	PIPE	
080	2508425-0000		2	PIPE	
090	2519430-0000		1	BRACKET	
140	315229-0103		2	GASKETS, 23,1X30,1X3,7 MM 1" FDA	
230	90424-0066		3	ROT.SPRAY NOZZLE, D26984-B3/8"-PVDF/4.5	
280	312105-0451		6	SCREW M6S ISO 4017 M8X20 A480	
A3/FLEX TGA (See drawing on page: 2-146)					
030	2769610-0000		1	PIPE	
040	2769607-0000		1	PIPE	
050	2921008-0000		1	PIPE	
060	2769608-0000		1	PIPE	
080	2508425-0000		1	PIPE	
090	2792843-0000		1	BRACKET	
095	2892473-0000		1	PIPE	
140	315229-0103		2	GASKETS, 23,1X30,1X3,7 MM 1" FDA	
230	90424-0066		3	ROT.SPRAY NOZZLE, D26984-B3/8"-PVDF/4.5	
280	312105-0451		6	SCREW M6S ISO 4017 M8X20 A480	
Common Parts					
020	2508426-0000		1	BRACKET	
070	1037443-0000		6	GASKET	
100	312605-0318		9	HEXAGON NUT, M6M M8 A280	
110	312605-0316		4	HEXAGON NUT, M6M M6 A280	
120	315105-0153		6	WASHER BRB 6,4X12 RFR	
150	315233-0113		1	WASHER CAPTIVE SEALING G1/2	
160	342901-0105		1	HOSE NIPPLE, EXT.THR. R1/2-12 MM	
170	312105-0367		2	SCREW M6S ISO 4017 M6X14 A480	
180	342991-0102		1	HOSE CLIP,WORM DRIVE TYPE (16)-19	
210	90230-0042		1	NON-RETURN VALVE 1/2"	
220	90230-0044		1	NON-RETURN VALVE 1"	
	90230-0308		*1*	*GASKET KIT*	
260	90166-0121	MM	1000	HOSE	

Pos	Part No	UN	Qty	Description	Page No

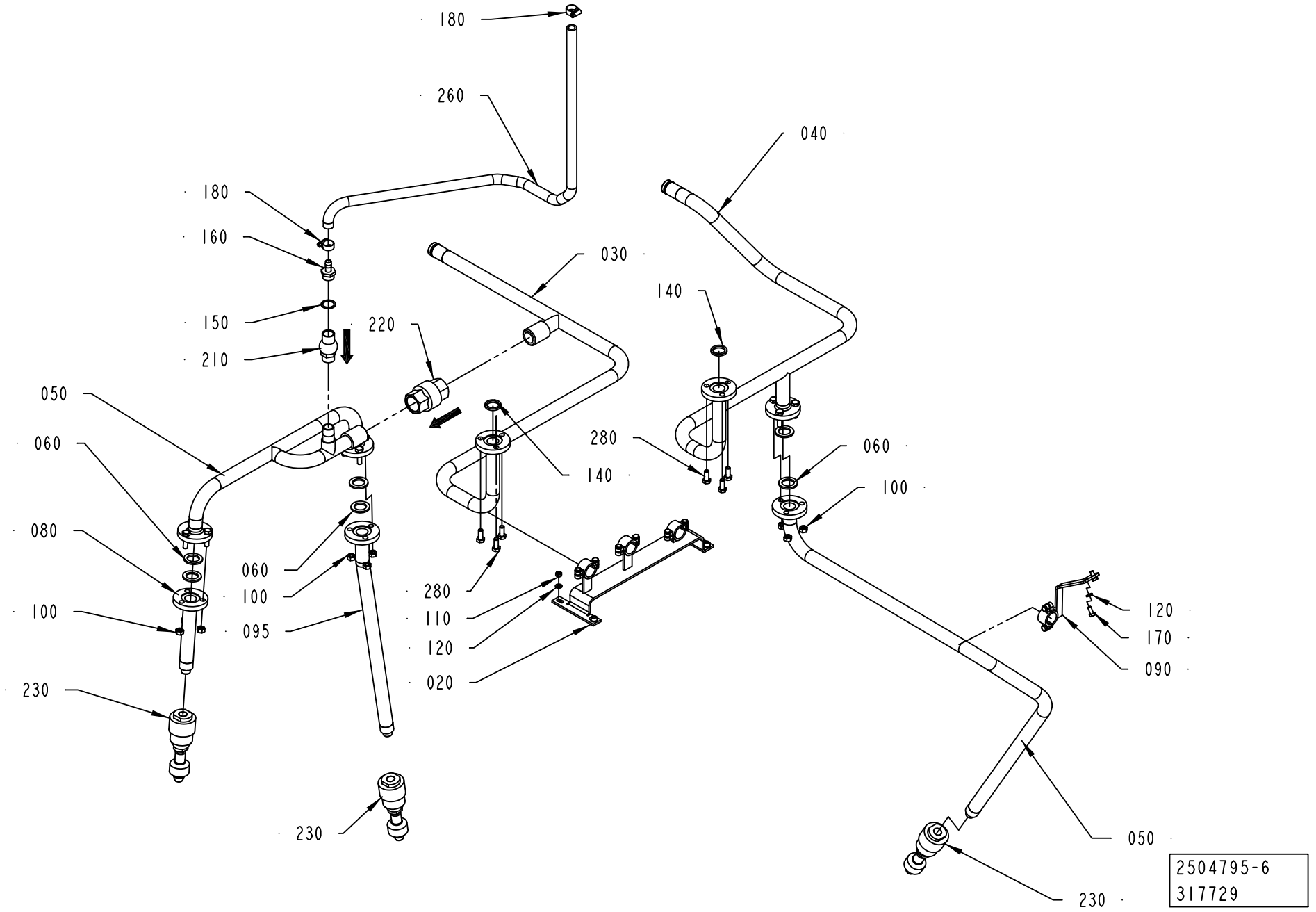
180
260
040
180
160
030
140
150
220
210
050
060
280
060
140
100
080
060
100
280
100
095
110
120
120
170
090
020
230
230
050
230
2504795-6
317729

ECM: 325192 - 20080101
Group number: 2504795-0100
Assembly Drawing: 2504795-6_1_AA

This list covers pages from 2-144 to 2-147

Pos	Part No	UN	Qty	Description	Page No
A3/FLEX TBA, A3/FLEX TPA (See drawing on page: 2-144)					
030	2506922-0000		1	PIPE	
040	2506923-0000		1	PIPE	
050	2506924-0000		1	PIPE	
060	2506925-0000		1	PIPE	
080	2508425-0000		2	PIPE	
090	2519430-0000		1	BRACKET	
140	315229-0103		2	GASKETS, 23,1X30,1X3,7 MM 1" FDA	
230	90424-0066		3	ROT.SPRAY NOZZLE, D26984-B3/8"-PVDF/4.5	
280	312105-0451		6	SCREW M6S ISO 4017 M8X20 A480	
A3/FLEX TGA (See drawing on page: 2-146)					
030	2769610-0000		1	PIPE	
040	2769607-0000		1	PIPE	
050	2921008-0000		1	PIPE	
060	2769608-0000		1	PIPE	
080	2508425-0000		1	PIPE	
090	2792843-0000		1	BRACKET	
095	2892473-0000		1	PIPE	
140	315229-0103		2	GASKETS, 23,1X30,1X3,7 MM 1" FDA	
230	90424-0066		3	ROT.SPRAY NOZZLE, D26984-B3/8"-PVDF/4.5	
280	312105-0451		6	SCREW M6S ISO 4017 M8X20 A480	
Common Parts					
020	2508426-0000		1	BRACKET	
070	1037443-0000		6	GASKET	
100	312605-0318		9	HEXAGON NUT, M6M M8 A280	
110	312605-0316		4	HEXAGON NUT, M6M M6 A280	
120	315105-0153		6	WASHER BRB 6,4X12 RFR	
150	315233-0113		1	WASHER CAPTIVE SEALING G1/2	
160	342901-0105		1	HOSE NIPPLE, EXT.THR. R1/2-12 MM	
170	312105-0367		2	SCREW M6S ISO 4017 M6X14 A480	
180	342991-0102		1	HOSE CLIP,WORM DRIVE TYPE (16)-19	
210	90230-0042		1	NON-RETURN VALVE 1/2"	
220	90230-0044		1	NON-RETURN VALVE 1"	
	90230-0308		*1*	*GASKET KIT*	
260	90166-0121	MM	1000	HOSE	

Pos	Part No	UN	Qty	Description	Page No

Machine Type | Group Description | Used-In | Group Number | Page No

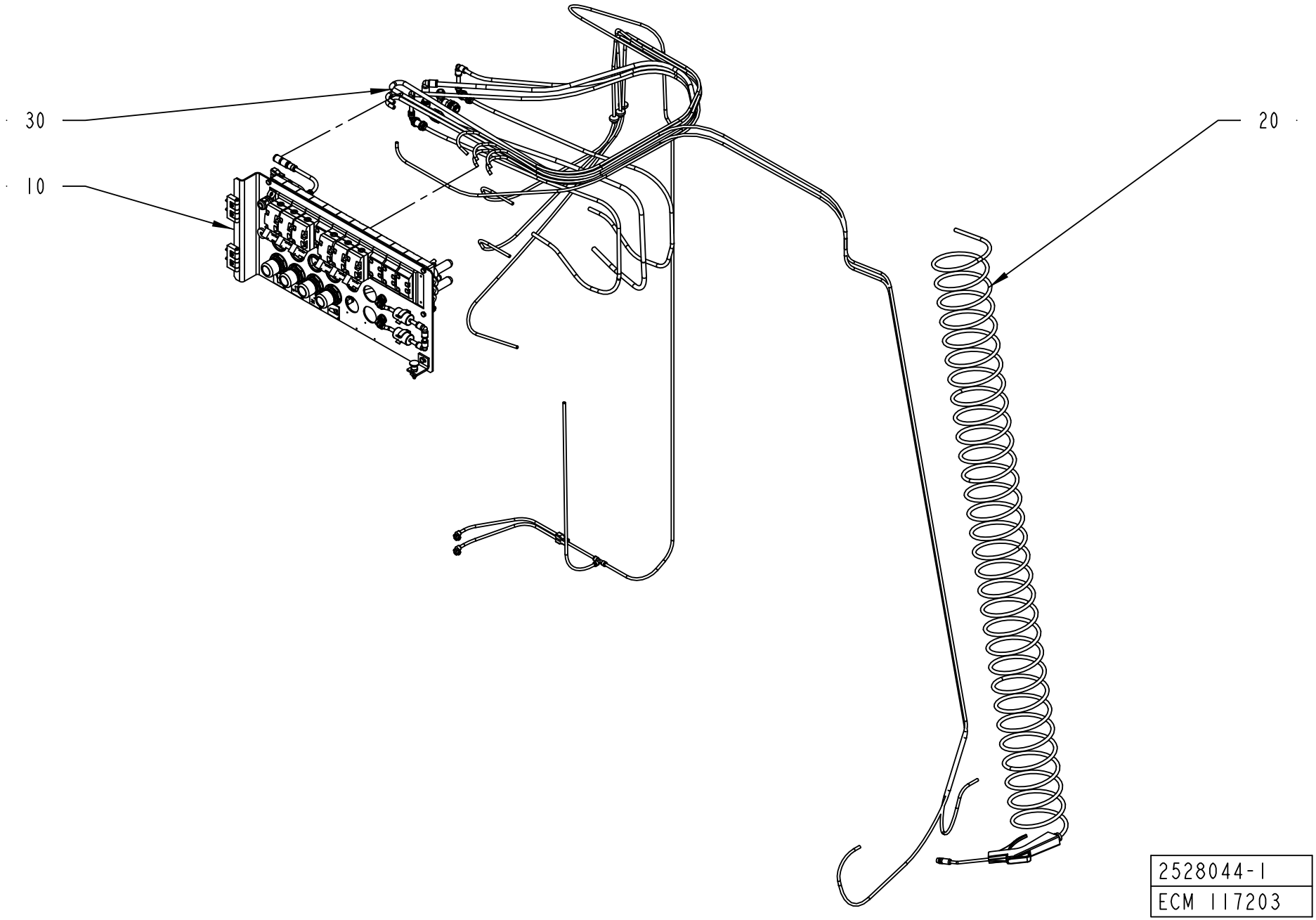
30
10
20
2528044-1
ECM 117203

ECM: 998704 - 20061104
Group number: 2528044-0100
Assembly Drawing: 2528044-1_1_AA

This list covers pages from 2-148 to 2-151

Pos	Part No	UN	Qty	Description	Page No
A3/FLEX TGA (See drawing on page: 2-150)					
030	2556392-0100		1	HOSE INSTALLATION	**2-153**
A3/FLEX TBA, A3/FLEX TPA (See drawing on page: 2-148)					
030	2528046-0100		1	HOSE INSTALLATION	**2-155, 2-157, 2-159**
Common Parts					
010	2506362-0100		1	VALVE PANEL	**2-161, 2-163, 2-165, 2-167, 2-169**
020	1095682-0100		1	AIR JET GUN	**2-177**

Pos	Part No	UN	Qty	Description	Page No

Machine Type | Group Description | Used-In | Group Number | Page No

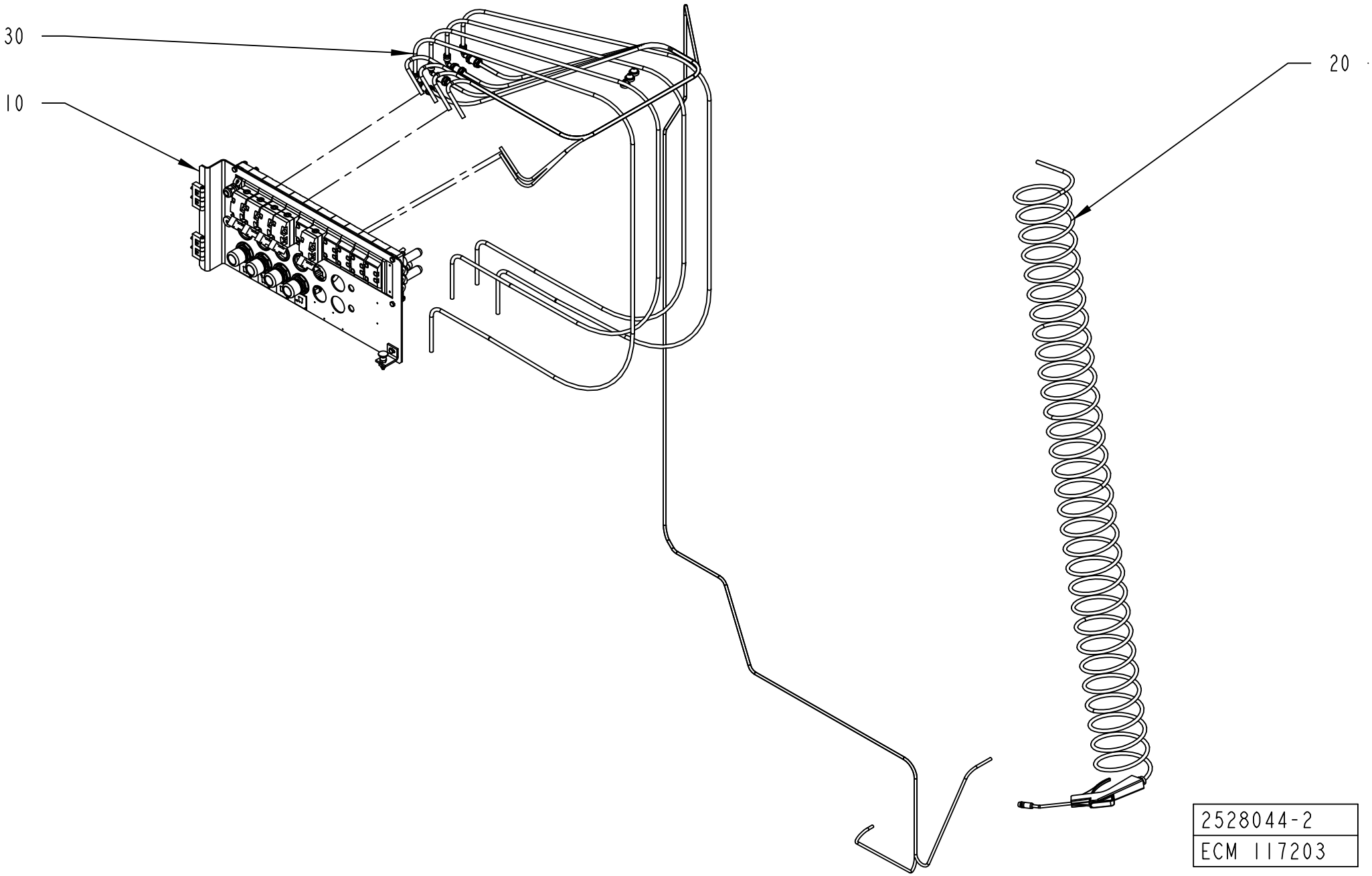
30
10
20
2528044-2
ECM 117203

Pos	Part No	UN	Qty	Description	Page No
A3/FLEX TGA (See drawing on page: 2-150)					
030	2556392-0100		1	HOSE INSTALLATION	**2-153**
A3/FLEX TBA, A3/FLEX TPA (See drawing on page: 2-148)					
030	2528046-0100		1	HOSE INSTALLATION	**2-155, 2-157, 2-159**
Common Parts					
010	2506362-0100		1	VALVE PANEL	**2-161, 2-163, 2-165, 2-167, 2-169**
020	1095682-0100		1	AIR JET GUN	**2-177**

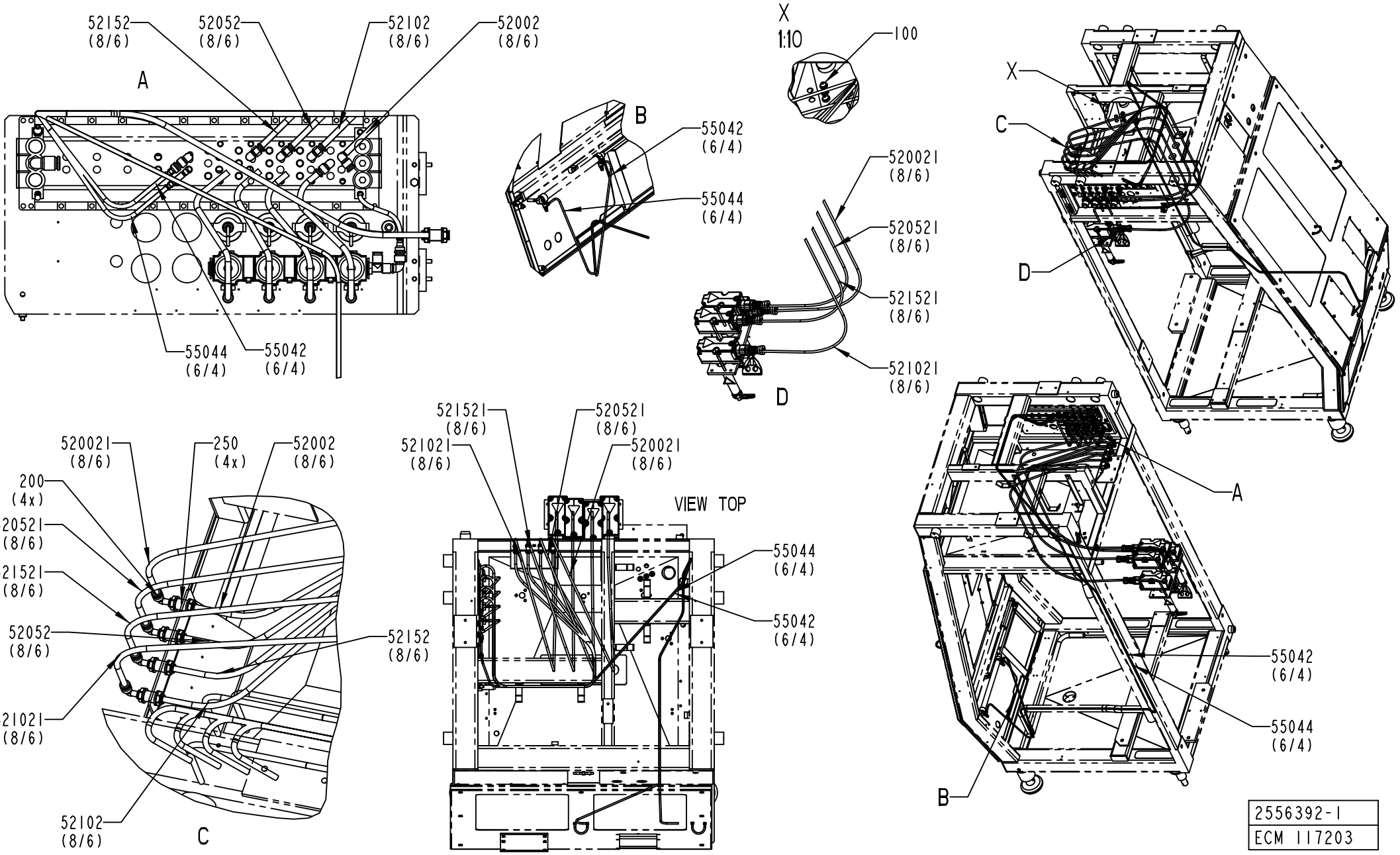
52152 (8/6)
52052 (8/6)
52102 (8/6)
52002 (8/6)
A
55044 (6/4)
55042 (6/4)
B
55042 (6/4)
55044 (6/4)
X
1:10
100
520021 (8/6)
520521 (8/6)
521521 (8/6)
521021 (8/6)
D
X
C
D
A
B
55042 (6/4)
55044 (6/4)
520021 (8/6)
250 (4x)
52002 (8/6)
200 (4x)
520521 (8/6)
521521 (8/6)
52052 (8/6)
52152 (8/6)
521021 (8/6)
52102 (8/6)
C
521521 (8/6)
520521 (8/6)
521021 (8/6)
520021 (8/6)
VIEW TOP
55044 (6/4)
55042 (6/4)
2556392-1
ECM 117203

ECM: 298751 - 20070701
Group number: 2556392-0100
Assembly Drawing: 2556392-1_1_AA

Pos	Part No	UN	Qty	Description	Page No
-					
100	90015-0020		3	LEAD-IN, TET5-7, E-1458016	
200	90055-0204		4	ELBOW WITH TAILPIECE 8/8 MM LONG	
250	342768-0103		4	BULKHEAD CONNECTOR, 8 MM	
52002	90166-0013	MM	1840	TUBE 8 MM PA BLUE	
520021	90166-0013	MM	2470	TUBE 8 MM PA BLUE	
52052	90166-0013	MM	1760	TUBE 8 MM PA BLUE	
520521	90166-0013	MM	2330	TUBE 8 MM PA BLUE	
52102	90166-0013	MM	1840	TUBE 8 MM PA BLUE	
521021	90166-0013	MM	2320	TUBE 8 MM PA BLUE	
52152	90166-0013	MM	1780	TUBE 8 MM PA BLUE	
521521	90166-0013	MM	2440	TUBE 8 MM PA BLUE	
550422	90166-0081	MM	4800	TUBE 6 MM PA BLUE	
55044	90166-0081	MM	4800	TUBE 6 MM PA BLUE	

Pos	Part No	UN	Qty	Description	Page No

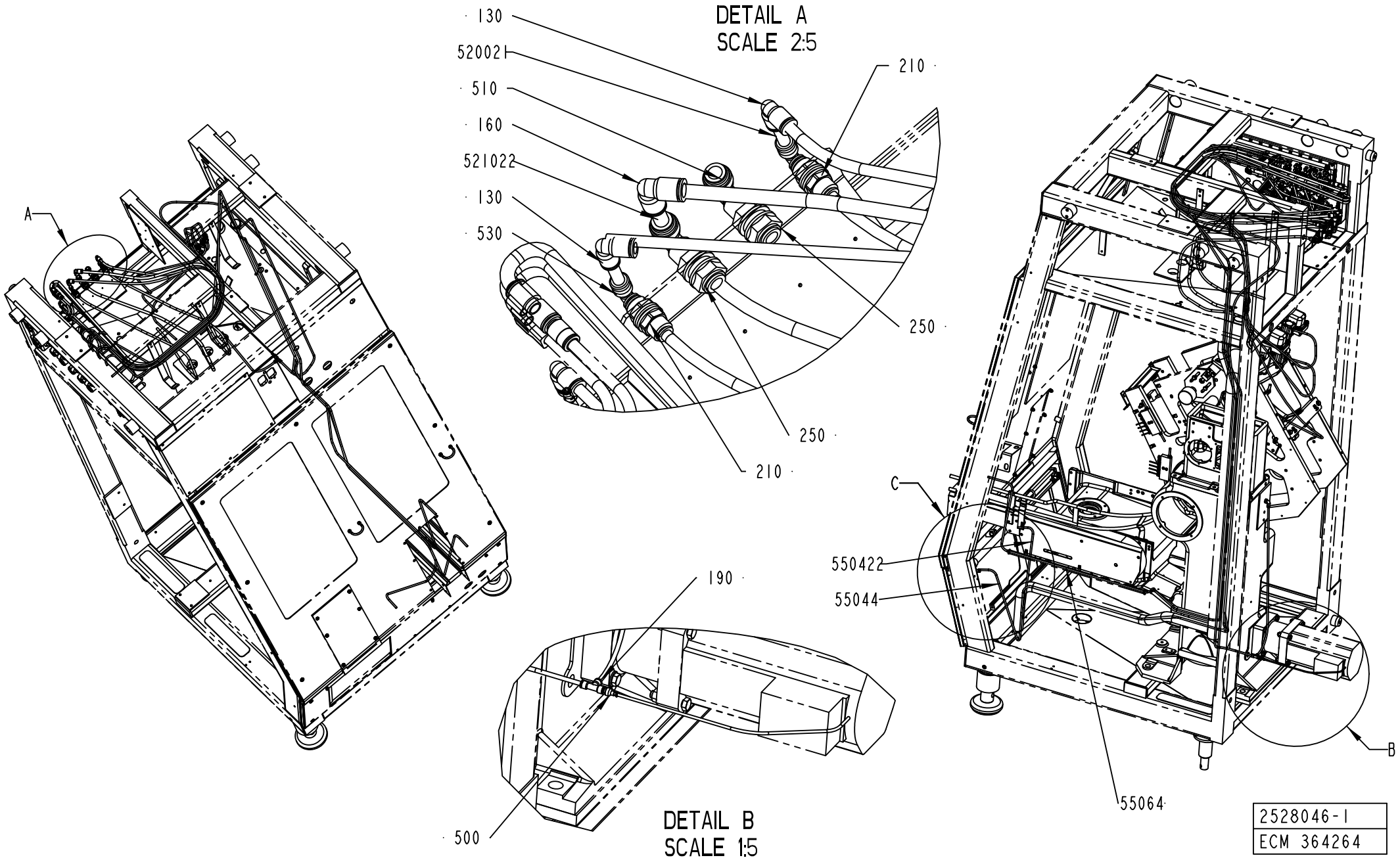
DETAIL A
SCALE 2:5
130
52002
510
160
521022
130
530
210
250
250
210
A
C
550422
55044
190
500
DETAIL B
SCALE 1:5
55064
B
2528046-1
ECM 364264

Pos	Part No	UN	Qty	Description	Page No
A3/FLEX DIMC/FLEX (See drawing on pages: 2-154, 2-156, 2-158)					
55064	90166-0081	MM	4300	TUBE 6 MM PA BLUE	
A3/FLEX QC (See drawing on pages: 2-154, 2-156, 2-158)					
55052	90166-0081	MM	2450	TUBE 6 MM PA BLUE	
55054	90166-0081	MM	2300	TUBE 6 MM PA BLUE	
Common Parts					
130	342735-0103		2	ELBOW PIPE JOINT	
160	342735-0104		1	ELBOW PIPE JOINT	
190	342748-0102		1	T-CONNECTION 6MM	
210	342768-0103		2	BULKHEAD CONNECTOR, 8 MM	
250	342768-0104		2	BULKHEAD CONNECTOR, 10 MM	
300	350010-0002		3	PUSH-IN BULKHEAD FITTING QSS-F-6	
310	350013-0002		2	PLUG QSC-6H	
500	342716-0202		1	REDUCER 4-6	
50011	90166-0081	MM	4200	TUBE 6 MM PA BLUE	
500111	90166-0081	MM	760	TUBE 6 MM PA BLUE	
500112	90166-0081	MM	170	TUBE 6 MM PA BLUE	
500113	315400-0016	MM	500	TUBE PUN-H-4X0,75-BL	
500114	90166-0081	MM	320	TUBE 6 MM PA BLUE	
510	90055-0248		2	ELBOW WITH TAILPIECE 10/10 MM	
520021	90166-0013	MM	140	TUBE 8 MM PA BLUE	
520022	90166-0013	MM	1960	TUBE 8 MM PA BLUE	
5200221	90166-0013	MM	1200	TUBE 8 MM PA BLUE	
520023	90166-0013	MM	2050	TUBE 8 MM PA BLUE	
5200231	90166-0013	MM	1200	TUBE 8 MM PA BLUE	
52102	90166-0216	MM	2600	TUBE 10 MM PUR BLUE	
521021	90166-0216	MM	1150	TUBE 10 MM PUR BLUE	
521022	90166-0216	MM	70	TUBE 10 MM PUR BLUE	
530	90055-0172		2	ELBOW WITH TAILPIECE 8/8 MM	
53154	90166-0081	MM	2800	TUBE 6 MM PA BLUE	
550422	90166-0081	M	4800	TUBE 6 MM PA BLUE	
55044	90166-0081	MM	4800	TUBE 6 MM PA BLUE	

Pos	Part No	UN	Qty	Description	Page No

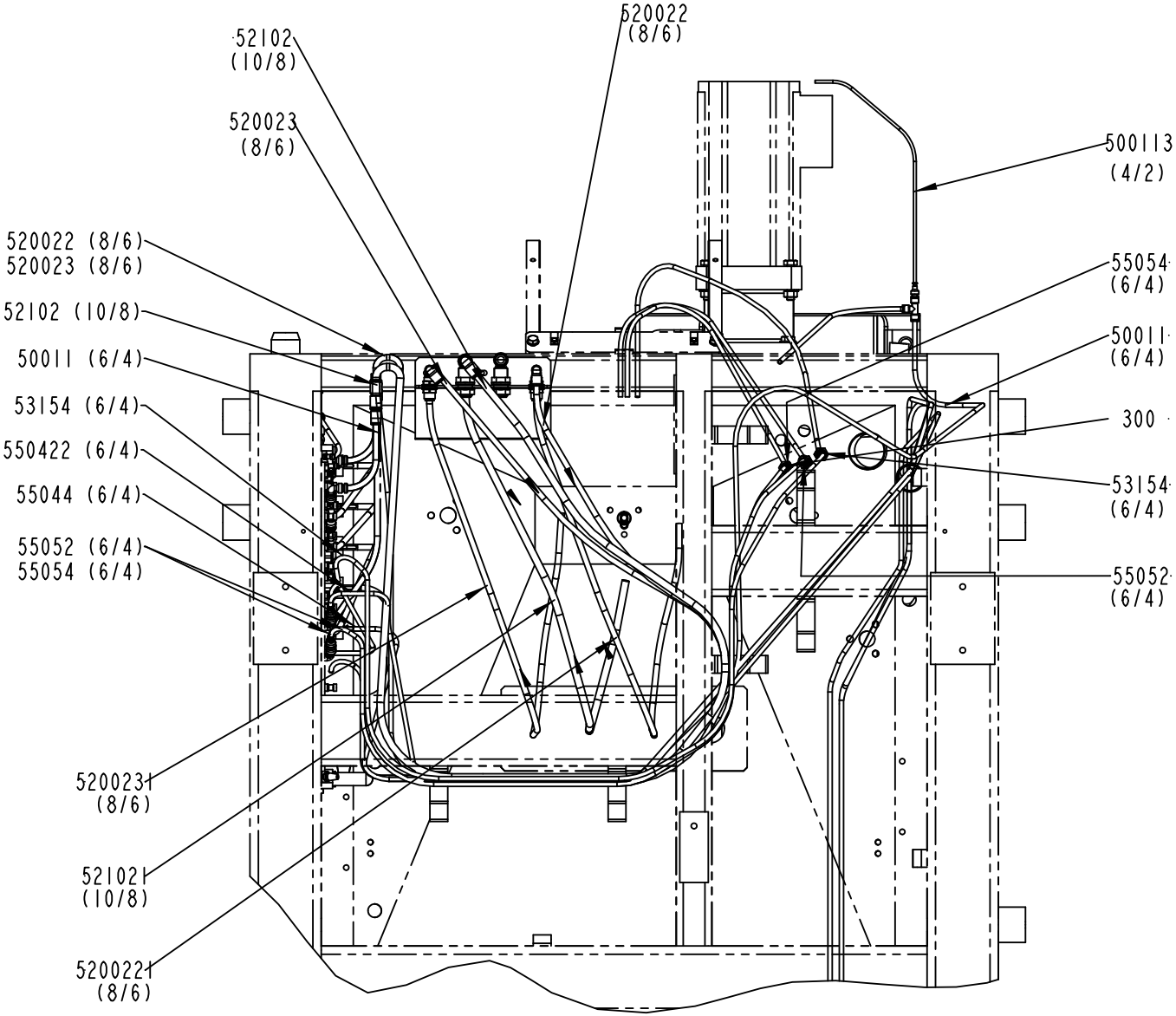

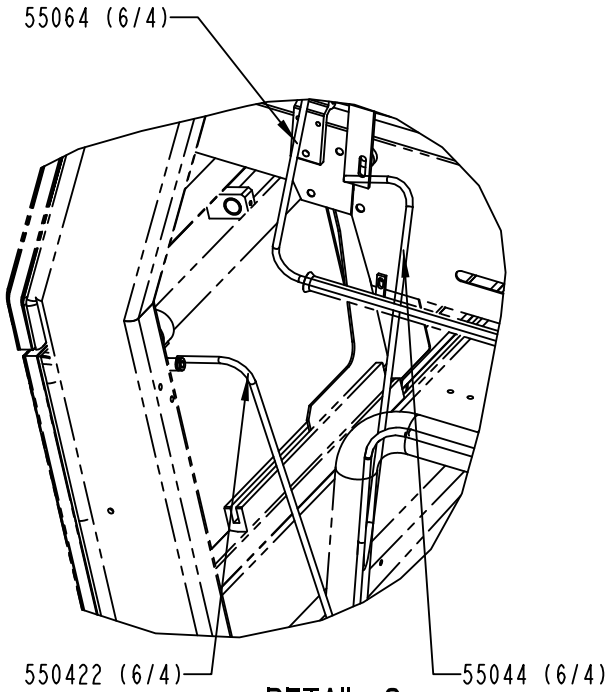

DETAIL C
SCALE 1:5

2528046-1
ECM 364264

ECM: 370542 - 20090101
Group number: 2528046-0100
Assembly Drawing: 2528046-1_2_AE

This list covers pages from 2-154 to 2-159

Pos	Part No	UN	Qty	Description	Page No
A3/FLEX DIMC/FLEX (See drawing on pages: 2-154, 2-156, 2-158)					
55064	90166-0081	MM	4300	TUBE 6 MM PA BLUE	
A3/FLEX QC (See drawing on pages: 2-154, 2-156, 2-158)					
55052	90166-0081	MM	2450	TUBE 6 MM PA BLUE	
55054	90166-0081	MM	2300	TUBE 6 MM PA BLUE	
Common Parts					
130	342735-0103		2	ELBOW PIPE JOINT	
160	342735-0104		1	ELBOW PIPE JOINT	
190	342748-0102		1	T-CONNECTION 6MM	
210	342768-0103		2	BULKHEAD CONNECTOR, 8 MM	
250	342768-0104		2	BULKHEAD CONNECTOR, 10 MM	
300	350010-0002		3	PUSH-IN BULKHEAD FITTING QSS-F-6	
310	350013-0002		2	PLUG QSC-6H	
500	342716-0202		1	REDUCER 4-6	
50011	90166-0081	MM	4200	TUBE 6 MM PA BLUE	
500111	90166-0081	MM	760	TUBE 6 MM PA BLUE	
500112	90166-0081	MM	170	TUBE 6 MM PA BLUE	
500113	315400-0016	MM	500	TUBE PUN-H-4X0,75-BL	
500114	90166-0081	MM	320	TUBE 6 MM PA BLUE	
510	90055-0248		2	ELBOW WITH TAILPIECE 10/10 MM	
520021	90166-0013	MM	140	TUBE 8 MM PA BLUE	
520022	90166-0013	MM	1960	TUBE 8 MM PA BLUE	
5200221	90166-0013	MM	1200	TUBE 8 MM PA BLUE	
520023	90166-0013	MM	2050	TUBE 8 MM PA BLUE	
5200231	90166-0013	MM	1200	TUBE 8 MM PA BLUE	
52102	90166-0216	MM	2600	TUBE 10 MM PUR BLUE	
521021	90166-0216	MM	1150	TUBE 10 MM PUR BLUE	
521022	90166-0216	MM	70	TUBE 10 MM PUR BLUE	
530	90055-0172		2	ELBOW WITH TAILPIECE 8/8 MM	
53154	90166-0081	MM	2800	TUBE 6 MM PA BLUE	
550422	90166-0081	M	4800	TUBE 6 MM PA BLUE	
55044	90166-0081	MM	4800	TUBE 6 MM PA BLUE	

Pos	Part No	UN	Qty	Description	Page No

Machine Type | Group Description | Used-In | Group Number | Page No

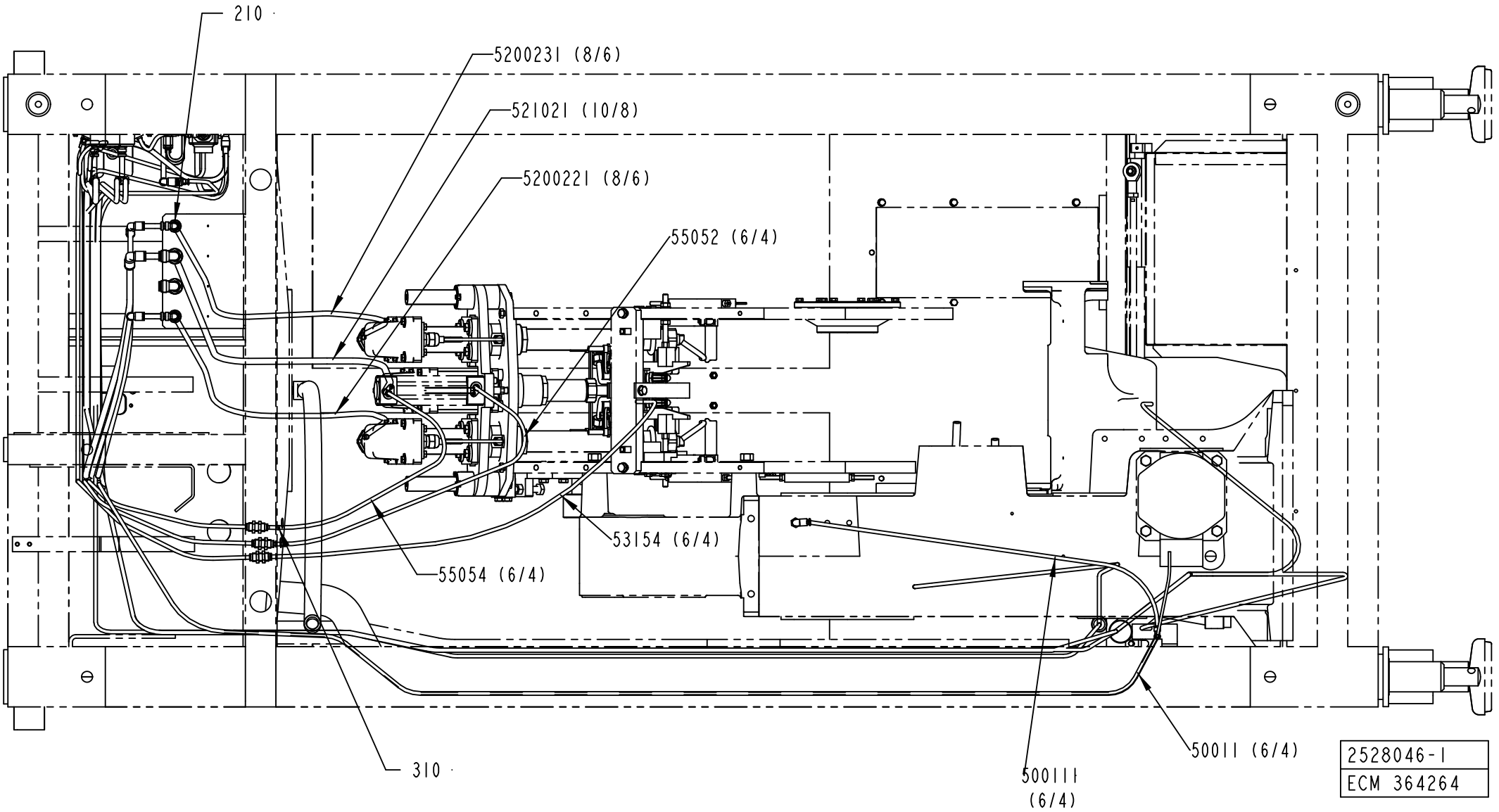
210
5200231 (8/6)
521021 (10/8)
5200221 (8/6)
55052 (6/4)
53154 (6/4)
55054 (6/4)
310
500111 (6/4)
50011 (6/4)
2528046-1
ECM 364264

Pos	Part No	UN	Qty	Description	Page No
A3/FLEX DIMC/FLEX (See drawing on pages: 2-154, 2-156, 2-158)					
55064	90166-0081	MM	4300	TUBE 6 MM PA BLUE	
A3/FLEX QC (See drawing on pages: 2-154, 2-156, 2-158)					
55052	90166-0081	MM	2450	TUBE 6 MM PA BLUE	
55054	90166-0081	MM	2300	TUBE 6 MM PA BLUE	
Common Parts					
130	342735-0103		2	ELBOW PIPE JOINT	
160	342735-0104		1	ELBOW PIPE JOINT	
190	342748-0102		1	T-CONNECTION 6MM	
210	342768-0103		2	BULKHEAD CONNECTOR, 8 MM	
250	342768-0104		2	BULKHEAD CONNECTOR, 10 MM	
300	350010-0002		3	PUSH-IN BULKHEAD FITTING QSS-F-6	
310	350013-0002		2	PLUG QSC-6H	
500	342716-0202		1	REDUCER 4-6	
50011	90166-0081	MM	4200	TUBE 6 MM PA BLUE	
500111	90166-0081	MM	760	TUBE 6 MM PA BLUE	
500112	90166-0081	MM	170	TUBE 6 MM PA BLUE	
500113	315400-0016	MM	500	TUBE PUN-H-4X0,75-BL	
500114	90166-0081	MM	320	TUBE 6 MM PA BLUE	
510	90055-0248		2	ELBOW WITH TAILPIECE 10/10 MM	
520021	90166-0013	MM	140	TUBE 8 MM PA BLUE	
520022	90166-0013	MM	1960	TUBE 8 MM PA BLUE	
5200221	90166-0013	MM	1200	TUBE 8 MM PA BLUE	
520023	90166-0013	MM	2050	TUBE 8 MM PA BLUE	
5200231	90166-0013	MM	1200	TUBE 8 MM PA BLUE	
52102	90166-0216	MM	2600	TUBE 10 MM PUR BLUE	
521021	90166-0216	MM	1150	TUBE 10 MM PUR BLUE	
521022	90166-0216	MM	70	TUBE 10 MM PUR BLUE	
530	90055-0172		2	ELBOW WITH TAILPIECE 8/8 MM	
53154	90166-0081	MM	2800	TUBE 6 MM PA BLUE	
550422	90166-0081	M	4800	TUBE 6 MM PA BLUE	
55044	90166-0081	MM	4800	TUBE 6 MM PA BLUE	

Pos	Part No	UN	Qty	Description	Page No

VALVE PANEL

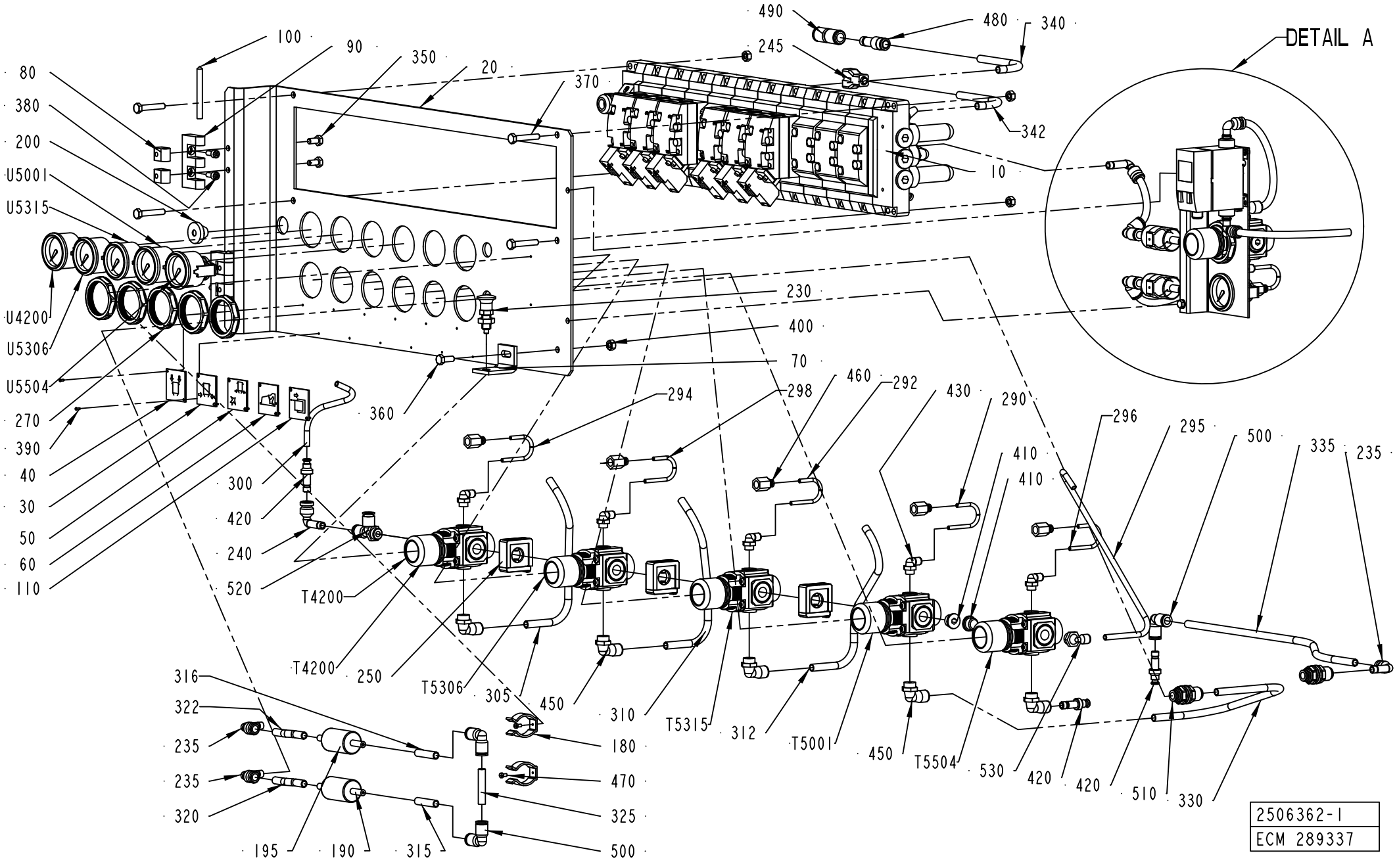
DETAIL A
80
380
200
U5001
U5315
U4200
U5306
U5504
270
390
40
30
50
60
110
100
90
350
20
370
490
480
340
245
342
10
230
400
70
360
294
298
460
292
430
290
296
295
500
335
235
410
410
300
420
240
520
T4200
T4200
T4200
250
T5306
305
450
310
T5315
312
T5001
450
T5504
530
420
420
510
330
316
322
235
235
320
195
190
315
180
470
325
500
2506362-1
ECM 289337

ECM: 366422 - 20081001
Group number: 2506362-0100
Assembly Drawing: 2506362-1_1_AD

This list covers pages from 2-160 to 2-169

Pos	Part No	UN	Qty	Description	Page No
A3/FLEX TBA 0500B, A3/FLEX TBA 1000B, A3/FLEX TBA 1000S STDA7, A3/FLEX TBA 1000SQ, A3/FLEX TBA 1000S NOMOLDEDCAP, A3/FLEX TPA 1000SQ, A3/FLEX TBA 0200S, A3/FLEX TBA 1500S, A3/FLEX TBA 0200B, A3/FLEX TBA 0250B, A3/FLEX TBA 0330S, A3/FLEX TPA 0330SQ, A3/FLEX TBA 0200M, A3/FLEX TBA 0250S, A3/FLEX TBA 0500S, A3/FLEX TPA 500SQ NOMOLDEDCAP (See drawing on page: 2-160)					
	2512829-0000		1	PNEUMATIC DIAGRAM	
	2527368-0000		1	PNEUMATIC DIAGRAM	
030	1144607-0000		1	SIGN	
040	1144606-0000		1	SIGN	
050	1129370-0000		1	SIGN	
060	479964-0000		1	SIGN	
180	90165-0019		2	TOOL CLIP, 81/3, OPEN, 20 - 30 MM	
190	90277-0045		1	FILTER / 9900-05-BK	
195	90277-0046		1	FILTER / 9933-05-101	
235	90055-0172		3	ELBOW WITH TAILPIECE 8/8 MM	
245	90055-0100		1	Y-CONNECTION, 6-6	
270	90457-0078		5	PANEL NUT	
295	90166-0081	MM	350	TUBE 6 MM PA BLUE	
315	90166-0013	MM	40	TUBE 8 MM PA BLUE	
316	90166-0013	MM	40	TUBE 8 MM PA BLUE	
320	90166-0013	MM	60	TUBE 8 MM PA BLUE	
322	90166-0013	MM	60	TUBE 8 MM PA BLUE	
325	90166-0013	MM	40	TUBE 8 MM PA BLUE	
330	90166-0013	MM	325	TUBE 8 MM PA BLUE	
335	90166-0013	MM	450	TUBE 8 MM PA BLUE	
340	90166-0013	MM	350	TUBE 8 MM PA BLUE	
342	90166-0013	MM	80	TUBE 8 MM PA BLUE	
410	342713-0210		2	PLUG, EXT THREAD HEX SOCKET	
430	90458-2955		5	ELBOW PIPE JOINT, EXT.THREAD,	
450	90458-2958		5	ELBOW PIPE JOINT, EXT.THREAD, D=8MM-G1/4	
460	342770-0101		5	RAIGHT COUPLING INT, D=4 MM - G1/8	
470	312125-0220		2	SCREW ISO 1207 M3X6 A4	
480	342716-0206		1	REDUCER 8-10	
490	342728-0104		1	PIPE COUPLING 10 MM	
500	342735-0103		3	ELBOW PIPE JOINT	
510	342768-0103		2	BULKHEAD CONNECTOR, 8 MM	
530	90458-2957		1	ELBOW PIPE JOINT, EXT.THREAD, D=6MM-G1/4	
T4200	90113-0469		1	MANIFOLD REGULATOR 4 BAR	
T5001	90457-0144		1	REGULATOR 0,3-2 BAR	
T5306	90113-0469		1	MANIFOLD REGULATOR 4 BAR	
T5315	90113-0469		1	MANIFOLD REGULATOR 4 BAR	
U4200	90043-0064		1	PRESSURE GAUGE, 2048 D=40 MM	
U5001	90043-0090		1	PRESSURE GAUGE, 2048 D=40 MM	
U5306	90043-0064		1	PRESSURE GAUGE, 2048 D=40 MM	
U5315	90043-0064		1	PRESSURE GAUGE, 2048 D=40 MM	
A3/FLEX TBA 1000S LIGHTCAP (See drawing on pages: 2-160, 2-162, 2-164)					
	2871037-0000		1	PNEUMATIC DIAGRAM	
030	1144607-0000		1	SIGN	
040	1144606-0000		1	SIGN	
050	1129370-0000		1	SIGN	
060	479964-0000		1	SIGN	
180	90165-0019		4	TOOL CLIP, 81/3, OPEN, 20 - 30 MM	
190	90277-0045		2	FILTER / 9900-05-BK	
195	90277-0046		2	FILTER / 9933-05-101	
235	90055-0172		5	ELBOW WITH TAILPIECE 8/8 MM	
245	90055-0100		1	Y-CONNECTION, 6-6	
270	90457-0078		6	PANEL NUT	
295	90166-0081	MM	350	TUBE 6 MM PA BLUE	
316	90166-0013	MM	200	TUBE 8 MM PA BLUE	
325	90166-0013	MM	40	TUBE 8 MM PA BLUE	
330	90166-0013	MM	325	TUBE 8 MM PA BLUE	
335	90166-0013	MM	450	TUBE 8 MM PA BLUE	
340	90166-0013	MM	350	TUBE 8 MM PA BLUE	
342	90166-0013	MM	80	TUBE 8 MM PA BLUE	
410	342713-0210		3	PLUG, EXT THREAD HEX SOCKET	
430	90458-2955		6	ELBOW PIPE JOINT, EXT.THREAD,	
450	90458-2958		5	ELBOW PIPE JOINT, EXT.THREAD, D=8MM-G1/4	
460	342770-0101		6	RAIGHT COUPLING INT, D=4 MM - G1/8	
480	342716-0206		1	REDUCER 8-10	
490	342728-0104		1	PIPE COUPLING 10 MM	
510	342768-0103		2	BULKHEAD CONNECTOR, 8 MM	
530	90458-2957		1	ELBOW PIPE JOINT, EXT.THREAD, D=6MM-G1/4	
600	2868212-0000		1	HOLDER	
610	90055-0204		1	ELBOW WITH TAILPIECE 8/8 MM LONG	
620	90459-2117		1	ADAPTER PLATE SDE1-..-W.., 194297	
630	315106-0124		4	WASHER ISO 7089-3-200 HV A4	
640	312625-0310		4	HEXAGON THIN NUT, EN 24035 ML6M M3 A4	
650	90166-0013	MM	200	TUBE 8 MM PA BLUE	
660	90166-0013	MM	7000	TUBE 8 MM PA BLUE	
670	90166-0013	MM	300	TUBE 8 MM PA BLUE	
680	90166-0013	MM	200	TUBE 8 MM PA BLUE	
690	312105-0327		2	SCREW M6S ISO 4017 M5X12 A480	
700	315105-0146		4	WASHER BRB 5,3X10 RFR	
710	312605-0314		2	HEXAGON NUT, M6M M5 A280	

Machine Type | Group Description | Used-In | Group Number | Page No

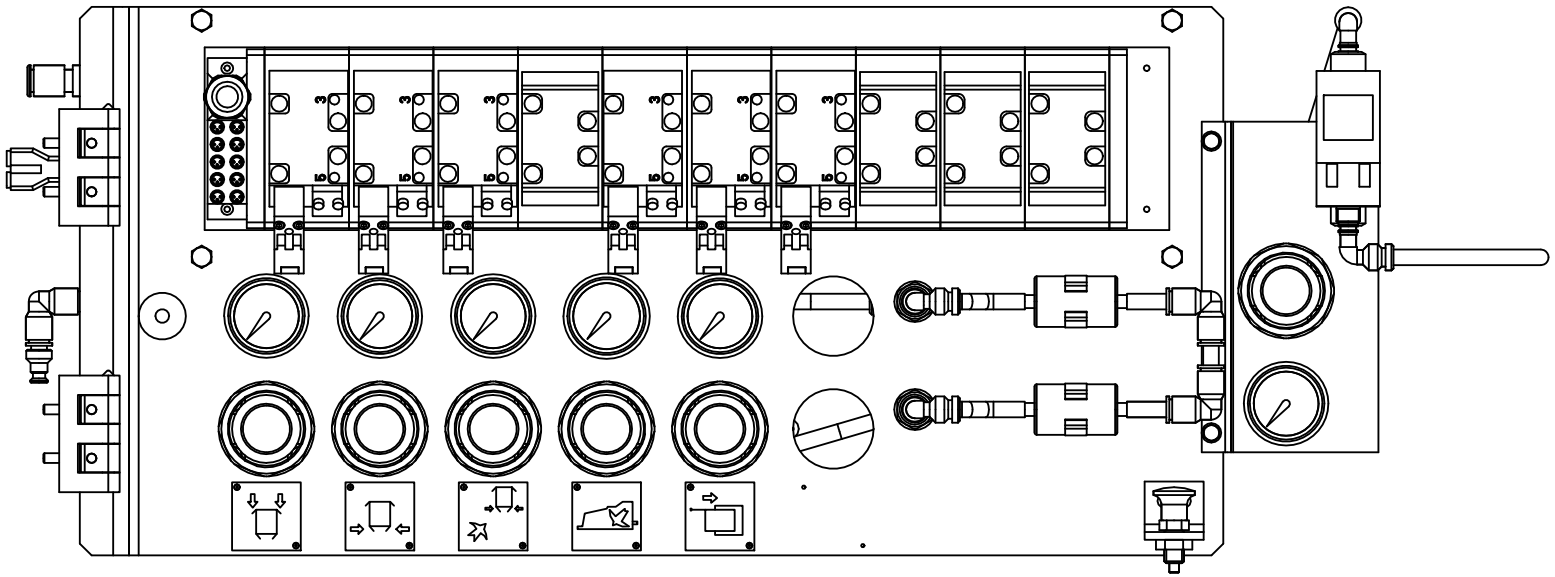

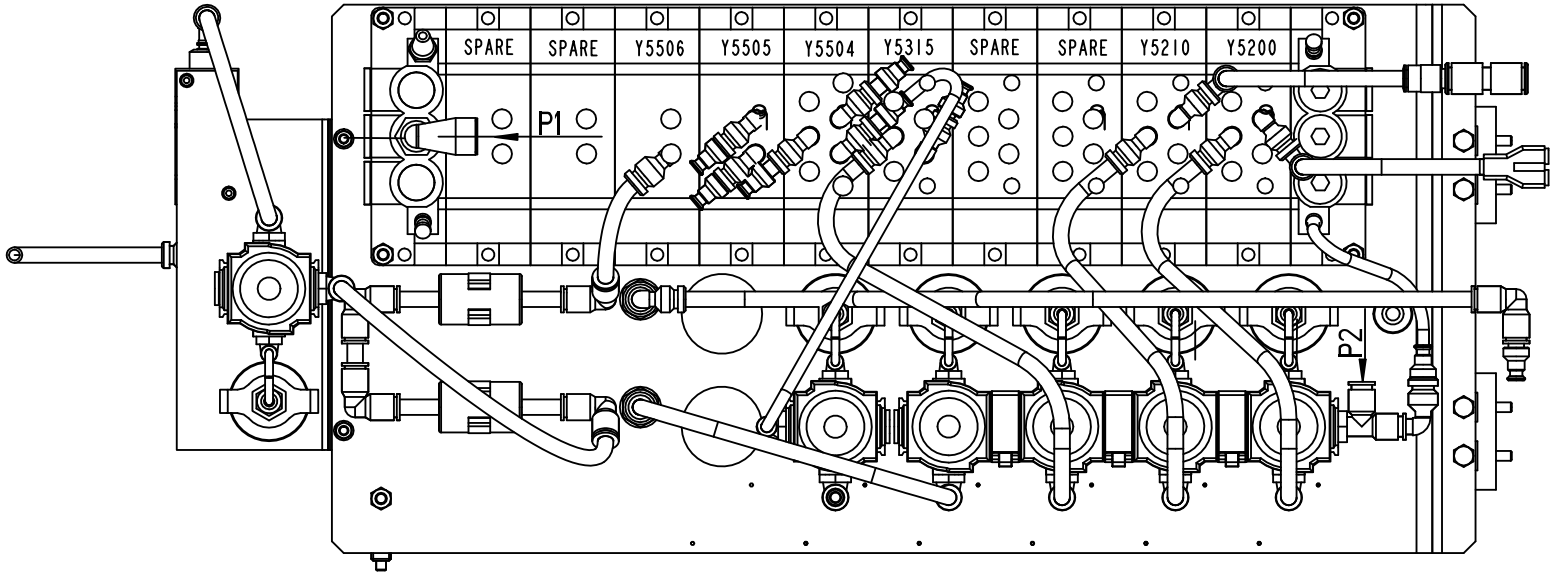

2506362-1
ECM 289337

ECM: 366422 - 20081001
Group number: 2506362-0100
Assembly Drawing: 2506362-1_2_AD

This list covers pages from 2-160 to 2-169

Pos	Part No	UN	Qty	Description	Page No
A3/FLEX TBA 1000S LIGHTCAP (Cont'd) (See drawing on pages: 2-162, 2-164)					
720	90166-0095	MM	90	TUBE 4 MM PA BLUE (50M)	
B5516	90600-1769		1	FLOW SENSOR, SFE1-LF-F200-HQ8-P2I-M12	
T4200	90113-0469		1	MANIFOLD REGULATOR 4 BAR	
T5001	90457-0144		1	REGULATOR 0,3-2 BAR	
T5306	90113-0469		1	MANIFOLD REGULATOR 4 BAR	
T5315	90113-0469		1	MANIFOLD REGULATOR 4 BAR	
T5506	90113-0469		1	MANIFOLD REGULATOR 4 BAR	
U4200	90043-0064		1	PRESSURE GAUGE, 2048 D=40 MM	
U5001	90043-0090		1	PRESSURE GAUGE, 2048 D=40 MM	
U5306	90043-0064		1	PRESSURE GAUGE, 2048 D=40 MM	
U5315	90043-0064		1	PRESSURE GAUGE, 2048 D=40 MM	
U5506	90043-0064		1	PRESSURE GAUGE, 2048 D=40 MM	
W5516	90459-5578		1	ACTUATOR/SENSOR CABLE PRKT 5-56/5M	
A3/FLEX TBA 1890S, A3/FLEX TBA 2000S, A3/FLEX TBA 1400B					
	2527368-0000		1	PNEUMATIC DIAGRAM	
	2719737-0000		1	PNEUMATIC DIAGRAM	
030	1144607-0000		1	SIGN	
040	1144606-0000		1	SIGN	
050	1129370-0000		1	SIGN	
060	479964-0000		1	SIGN	
180	90165-0019		2	TOOL CLIP, 81/3, OPEN, 20 - 30 MM	
190	90277-0045		1	FILTER / 9900-05-BK	
195	90277-0046		1	FILTER / 9933-05-101	
235	90055-0172		3	ELBOW WITH TAILPIECE 8/8 MM	
245	90055-0100		1	Y-CONNECTION, 6-6	
270	90457-0078		5	PANEL NUT	
295	90166-0081	MM	350	TUBE 6 MM PA BLUE	
315	90166-0013	MM	40	TUBE 8 MM PA BLUE	
316	90166-0013	MM	40	TUBE 8 MM PA BLUE	
320	90166-0013	MM	60	TUBE 8 MM PA BLUE	
322	90166-0013	MM	60	TUBE 8 MM PA BLUE	
325	90166-0013	MM	40	TUBE 8 MM PA BLUE	
330	90166-0013	MM	325	TUBE 8 MM PA BLUE	
335	90166-0013	MM	450	TUBE 8 MM PA BLUE	
340	90166-0013	MM	350	TUBE 8 MM PA BLUE	
342	90166-0013	MM	80	TUBE 8 MM PA BLUE	
410	342713-0210		2	PLUG, EXT THREAD HEX SOCKET	
430	90458-2955		5	ELBOW PIPE JOINT, EXT.THREAD,	
450	90458-2958		5	ELBOW PIPE JOINT, EXT.THREAD, D=8MM-G1/4	
460	342770-0101		5	RAIGHT COUPLING INT, D=4 MM - G1/8	
470	312125-0220		2	SCREW ISO 1207 M3X6 A4	
480	342716-0206		1	REDUCER 8-10	
490	342728-0104		1	PIPE COUPLING 10 MM	
500	342735-0103		3	ELBOW PIPE JOINT	
510	342768-0103		2	BULKHEAD CONNECTOR, 8 MM	
530	90458-2957		1	ELBOW PIPE JOINT, EXT.THREAD, D=6MM-G1/4	
T4200	90113-0469		1	MANIFOLD REGULATOR 4 BAR	
T5001	90457-0144		1	REGULATOR 0,3-2 BAR	
T5306	90113-0469		1	MANIFOLD REGULATOR 4 BAR	
T5315	90113-0469		1	MANIFOLD REGULATOR 4 BAR	
U4200	90043-0064		1	PRESSURE GAUGE, 2048 D=40 MM	
U5001	90043-0090		1	PRESSURE GAUGE, 2048 D=40 MM	
U5306	90043-0064		1	PRESSURE GAUGE, 2048 D=40 MM	
U5315	90043-0064		1	PRESSURE GAUGE, 2048 D=40 MM	
A3/FLEX TGA 1000SQ, A3/FLEX TGA 0500SQ, A3/FLEX TGA 0750SQ (See drawing on pages: 2-160, 2-162, 2-164, 2-166)					
	2547470-0000		1	PNEUMATIC DIAGRAM	
	2876477-0000		1	PNEUMATIC DIAGRAM	
035	2545141-0000		1	SIGN	
045	2545159-0000		1	SIGN	
055	2545201-0000		1	SIGN	
065	2546323-0000		1	SIGN	
270	90457-0078		5	PANEL NUT	
295	90166-0081	MM	250	TUBE 6 MM PA BLUE	
317	90166-0013	MM	325	TUBE 8 MM PA BLUE	
410	342713-0210		2	PLUG, EXT THREAD HEX SOCKET	
420	342716-0203		2	REDUCER 6-8	
430	90458-2955		5	ELBOW PIPE JOINT, EXT.THREAD,	
450	90458-2958		5	ELBOW PIPE JOINT, EXT.THREAD, D=8MM-G1/4	
460	342770-0101		5	RAIGHT COUPLING INT, D=4 MM - G1/8	
530	90458-2957		1	ELBOW PIPE JOINT, EXT.THREAD, D=6MM-G1/4	
T5200	90113-0469		1	MANIFOLD REGULATOR 4 BAR	
T5205	90113-0469		1	MANIFOLD REGULATOR 4 BAR	
T5210	90113-0469		1	MANIFOLD REGULATOR 4 BAR	
T5215	90113-0469		1	MANIFOLD REGULATOR 4 BAR	
U5200	90043-0064		1	PRESSURE GAUGE, 2048 D=40 MM	
U5205	90043-0064		1	PRESSURE GAUGE, 2048 D=40 MM	
U5210	90043-0064		1	PRESSURE GAUGE, 2048 D=40 MM	
U5215	90043-0064		1	PRESSURE GAUGE, 2048 D=40 MM	
A3/FLEX TPA 500SQ LIGHTCAP (See drawing on page: 2-168)					
	2527368-0000		1	PNEUMATIC DIAGRAM	
	2871037-0000		1	PNEUMATIC DIAGRAM	
030	1144607-0000		1	SIGN	

Machine Type | Group Description | Used-In | Group Number | Page No

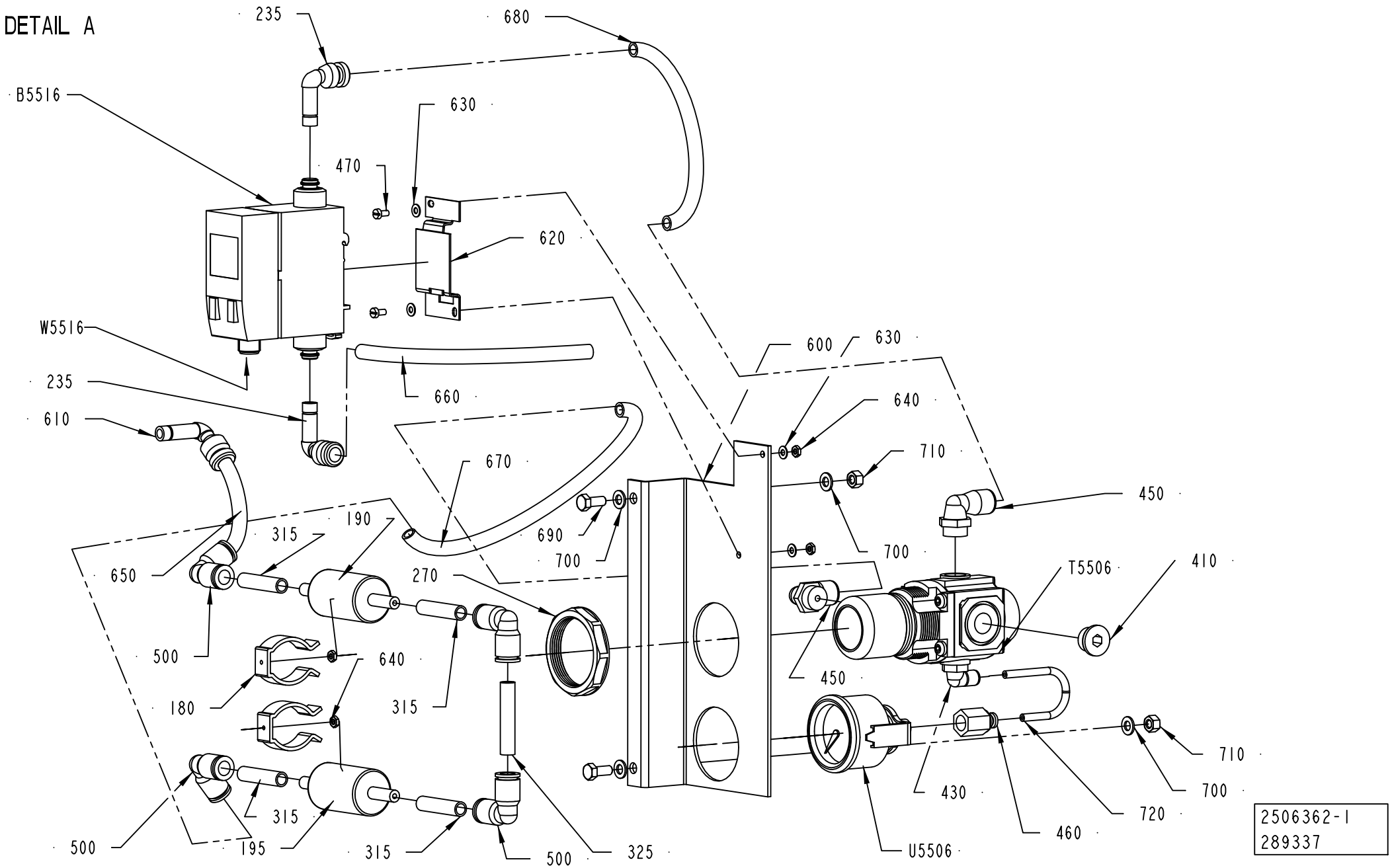
DETAIL A
235
680
B5516
630
470
620
W5516
600
630
235
660
640
610
710
670
450
190
315
690
700
650
700
T5506
410
270
500
640
450
180
315
710
700
430
720
460
500
315
195
315
500
325
U5506
2506362-1
289337

ECM: 366422 - 20081001
Group number: 2506362-0100
Assembly Drawing: 2506362-1_3_AD

This list covers pages from 2-160 to 2-169

Pos	Part No	UN	Qty	Description	Page No
A3/FLEX TPA 500SQ LIGHTCAP (Cont'd) (See drawing on pages: 2-160, 2-162, 2-164)					
040	1144606-0000		1	SIGN	
050	1129370-0000		1	SIGN	
060	479964-0000		1	SIGN	
180	90165-0019		4	TOOL CLIP, 81/3, OPEN, 20 - 30 MM	
190	90277-0045		2	FILTER / 9900-05-BK	
195	90277-0046		2	FILTER / 9933-05-101	
235	90055-0172		5	ELBOW WITH TAILPIECE 8/8 MM	
245	90055-0100		1	Y-CONNECTION, 6-6	
270	90457-0078		6	PANEL NUT	
295	90166-0081	MM	350	TUBE 6 MM PA BLUE	
315	90166-0013	MM	40	TUBE 8 MM PA BLUE	
316	90166-0013	MM	200	TUBE 8 MM PA BLUE	
320	90166-0013	MM	60	TUBE 8 MM PA BLUE	
322	90166-0013	MM	60	TUBE 8 MM PA BLUE	
325	90166-0013	MM	40	TUBE 8 MM PA BLUE	
330	90166-0013	MM	325	TUBE 8 MM PA BLUE	
335	90166-0013	MM	450	TUBE 8 MM PA BLUE	
340	90166-0013	MM	350	TUBE 8 MM PA BLUE	
342	90166-0013	MM	80	TUBE 8 MM PA BLUE	
410	342713-0210		3	PLUG, EXT THREAD HEX SOCKET	
430	90458-2955		6	ELBOW PIPE JOINT, EXT.THREAD,	
450	90458-2958		5	ELBOW PIPE JOINT, EXT.THREAD, D=8MM-G1/4	
460	342770-0101		6	RAIGHT COUPLING INT, D=4 MM - G1/8	
480	342716-0206		1	REDUCER 8-10	
490	342728-0104		1	PIPE COUPLING 10 MM	
510	342768-0103		2	BULKHEAD CONNECTOR, 8 MM	
530	90458-2957		1	ELBOW PIPE JOINT, EXT.THREAD, D=6MM-G1/4	
600	2868212-0000		1	HOLDER	
610	90055-0204		1	ELBOW WITH TAILPIECE 8/8 MM LONG	
620	90459-2117		1	ADAPTER PLATE SDE1-..-W.., 194297	
630	315106-0124		4	WASHER ISO 7089-3-200 HV A4	
640	312625-0310		4	HEXAGON THIN NUT, EN 24035 ML6M M3 A4	
650	90166-0013	MM	200	TUBE 8 MM PA BLUE	
660	90166-0013	MM	7000	TUBE 8 MM PA BLUE	
670	90166-0013	MM	300	TUBE 8 MM PA BLUE	
680	90166-0013	MM	200	TUBE 8 MM PA BLUE	
690	312105-0327		2	SCREW M6S ISO 4017 M5X12 A480	
700	315105-0146		4	WASHER BRB 5,3X10 RFR	
710	312605-0314		2	HEXAGON NUT, M6M M5 A280	
720	90166-0095	MM	90	TUBE 4 MM PA BLUE (50M)	
B5516	90600-1769		1	FLOW SENSOR, SFE1-LF-F200-HQ8-P2I-M12	
T4200	90113-0469		1	MANIFOLD REGULATOR 4 BAR	
T5001	90457-0144		1	REGULATOR 0,3-2 BAR	
T5306	90113-0469		1	MANIFOLD REGULATOR 4 BAR	
T5315	90113-0469		1	MANIFOLD REGULATOR 4 BAR	
T5506	90113-0469		1	MANIFOLD REGULATOR 4 BAR	
U4200	90043-0064		1	PRESSURE GAUGE, 2048 D=40 MM	
U5001	90043-0090		1	PRESSURE GAUGE, 2048 D=40 MM	
U5306	90043-0064		1	PRESSURE GAUGE, 2048 D=40 MM	
U5315	90043-0064		1	PRESSURE GAUGE, 2048 D=40 MM	
U5506	90043-0064		1	PRESSURE GAUGE, 2048 D=40 MM	
W5516	90459-5578		1	ACTUATOR/SENSOR CABLE PRKT 5-56/5M	
Common Parts					
010	2506363-0100		1	VALVE RAMP	**2-171, 2-173, 2-175**
020	2506364-0000		1	PLATE	
070	1348197-0000		1	HOLDER	
080	1129770-0000		4	BLOCKING PIECE	
090	1035792-0000		2	E-HINGE	
100	988685-0000		2	PIN	
110	2598025-0000		1	SIGN	
200	90015-0023		1	LEAD-IN, TET7-10, E-1458019	
230	90051-0112		1	LOCK KNOB, NO. GN 617 NIK5	
240	90055-0118		1	ELBOW WITH TAILPIECE 8/8 MM	
250	90113-0140		3	QUICK CLAMP	
290	90166-0095	MM	90	TUBE 4 MM PA BLUE (50M)	
292	90166-0095	MM	90	TUBE 4 MM PA BLUE (50M)	
294	90166-0095	MM	90	TUBE 4 MM PA BLUE (50M)	
296	90166-0095	MM	90	TUBE 4 MM PA BLUE (50M)	
298	90166-0095	MM	90	TUBE 4 MM PA BLUE (50M)	
300	90166-0081	MM	150	TUBE 6 MM PA BLUE	
305	90166-0013	MM	290	TUBE 8 MM PA BLUE	
310	90166-0013	MM	285	TUBE 8 MM PA BLUE	
312	90166-0013	MM	315	TUBE 8 MM PA BLUE	
350	312105-0366		4	SCREW M6S ISO 4017 M6X12 A480	
360	312105-0368		1	SCREW M6S ISO 4017 M6X16 A480	
370	312109-0376		4	SCREW M6S ISO 4017 M6X35 A480	
380	312115-0327		4	SCREW ISO4762 M5X12 A4 80	
390	312502-0120		10	DRIVE SCREW ROUND HEAD KDS 0X5	
400	312605-0316		5	HEXAGON NUT, M6M M6 A280	
520	342772-0122		1	ELBOW FITTING, 8 - G1/4	
T5504	90113-0469		1	MANIFOLD REGULATOR 4 BAR	
U5504	90043-0064		1	PRESSURE GAUGE, 2048 D=40 MM	

Machine Type | Group Description | Used-In | Group Number | Page No

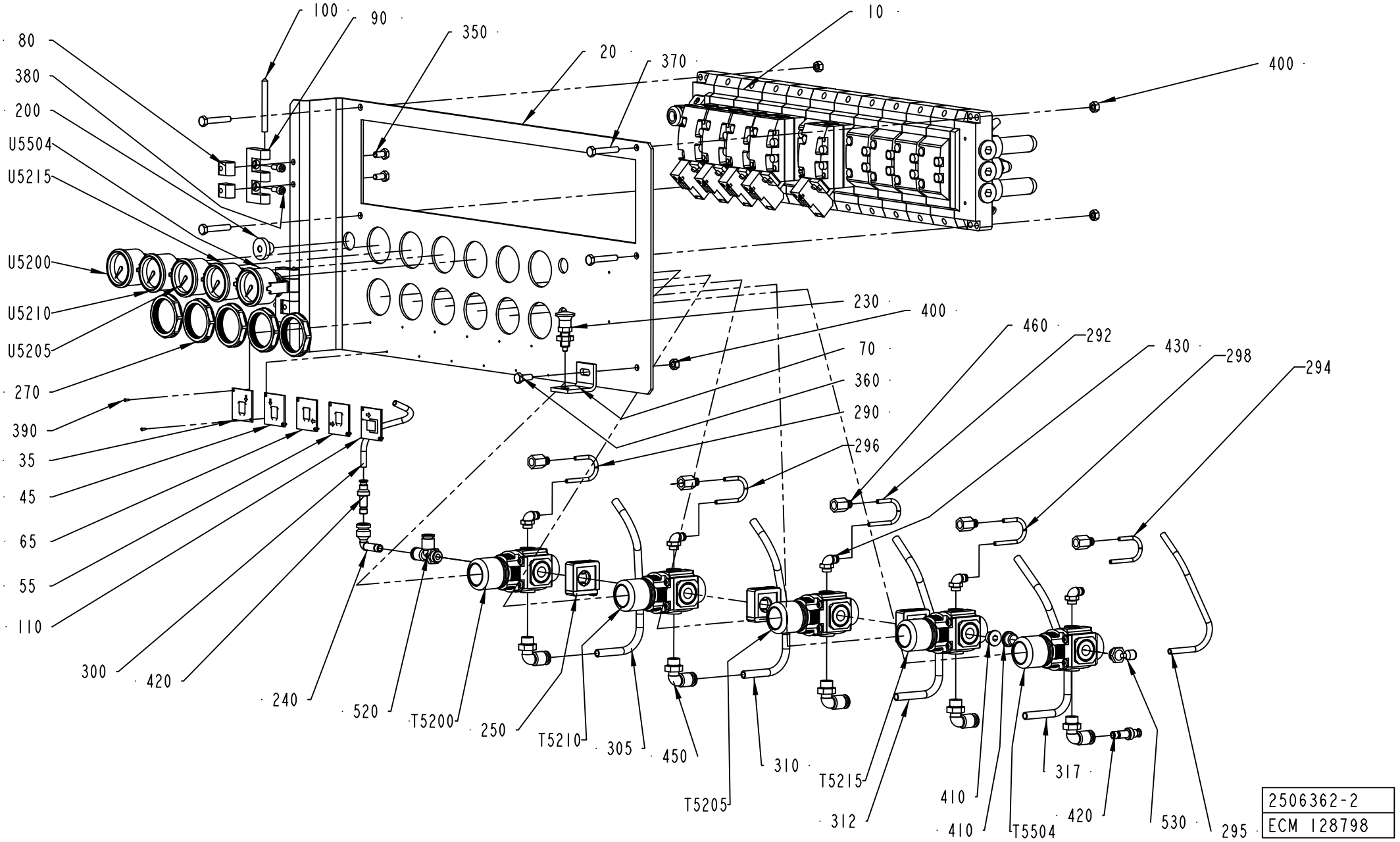

2506362-2
ECM 128798

ECM: 366422 - 20081001
Group number: 2506362-0100
Assembly Drawing: 2506362-2_1_AB

This list covers pages from 2-160 to 2-169

Pos	Part No	UN	Qty	Description	Page No
SEE PREVIOUS LISTS PAGES: 2-161, 2-163, 2-165.					

Pos	Part No	UN	Qty	Description	Page No

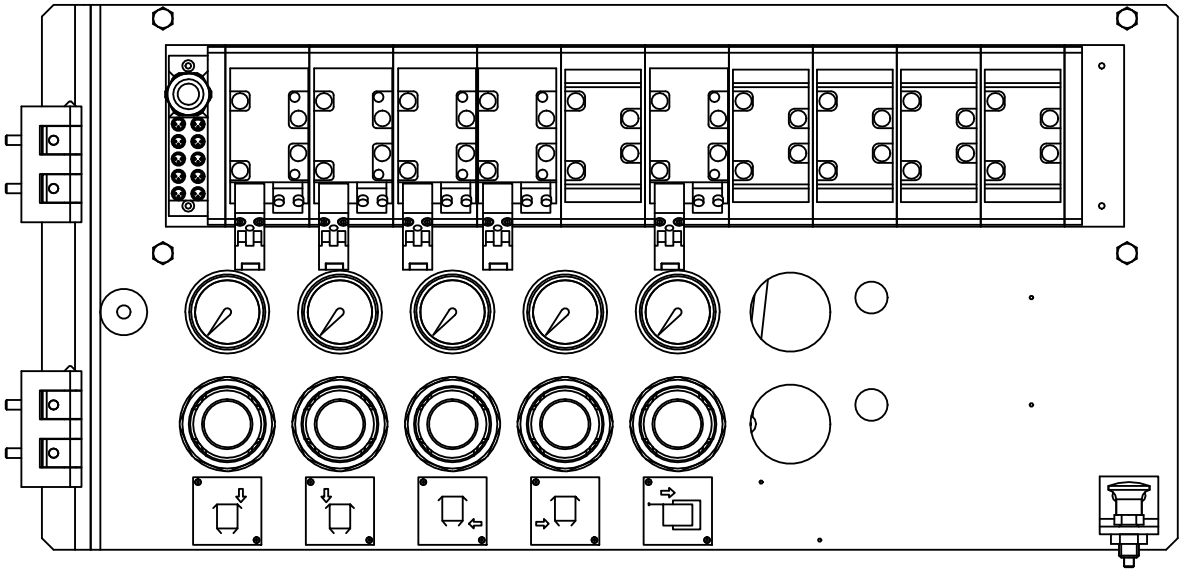

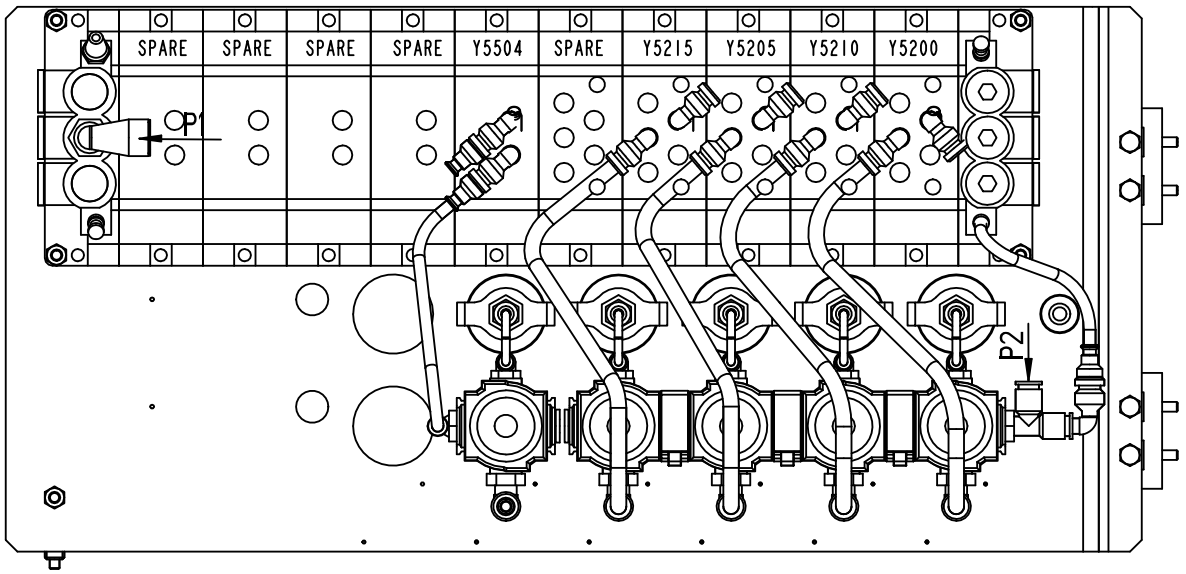

2506362-2
ECM 128798

ECM: 366422 - 20081001
Group number: 2506362-0100
Assembly Drawing: 2506362-2_2_AB

This list covers pages from 2-160 to 2-169

Pos	Part No	UN	Qty	Description	Page No
SEE PREVIOUS LISTS PAGES: 2-161, 2-163, 2-165.					

Pos	Part No	UN	Qty	Description	Page No

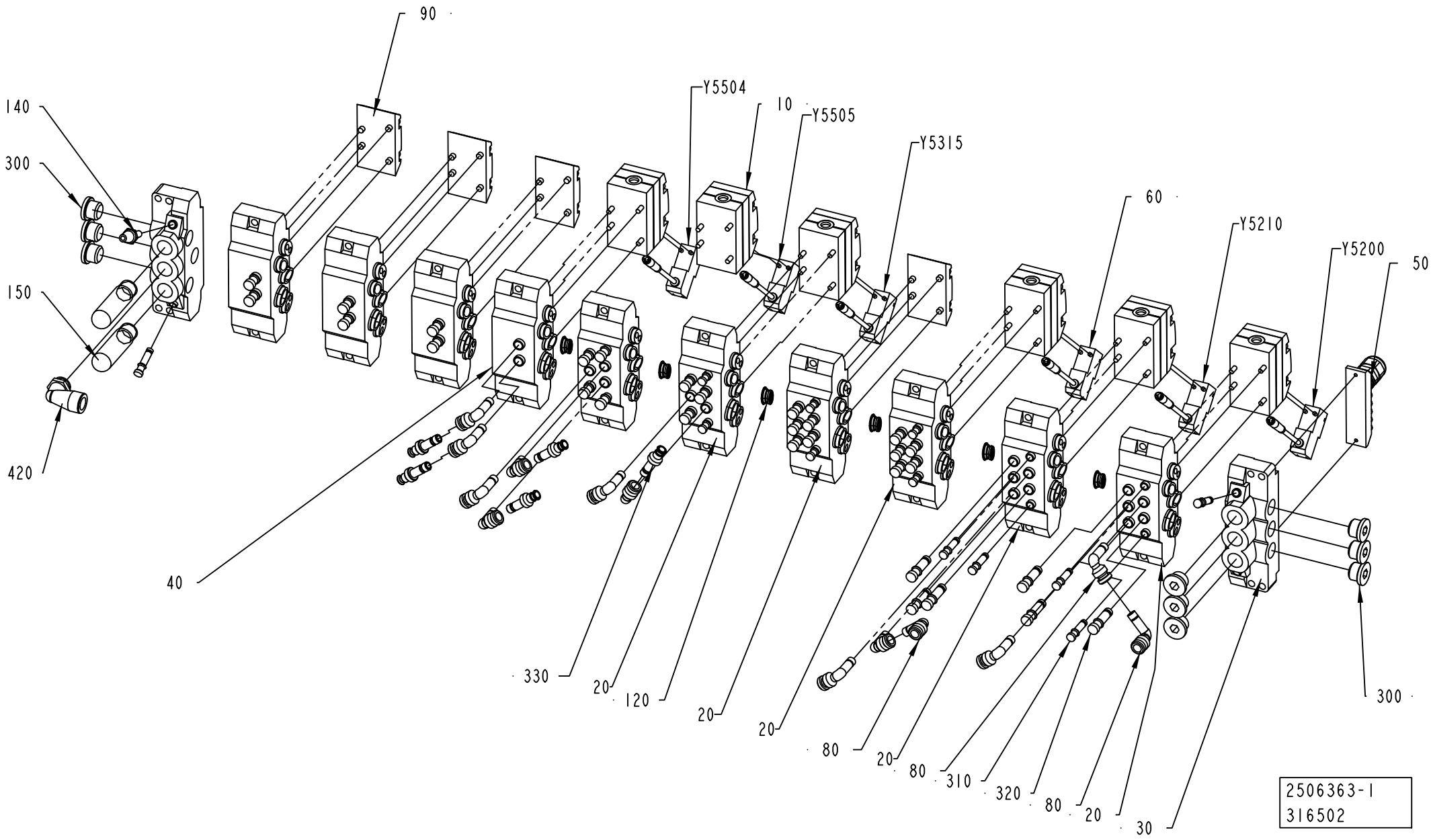
90
140
300
150
420
40
Y5504
10
Y5505
Y5315
60
Y5210
Y5200
50
330
20
120
20
20
80
20
80
310
320
80
20
30
300
2506363-1
316502

ECM: 327678 - 20080401
Group number: 2506363-0100
Assembly Drawing: 2506363-1_1_AC

This list covers pages from 2-170 to 2-175

Pos	Part No	UN	Qty	Description	Page No
A3/FLEX NOQC DIMC/FLEX (See drawing on page: 2-174)					
010	90042-0215		6	VALVE BODY 5/2 UNISTABLE	
060	90042-0538		1	PILOT VALVE L=500MM	
080	90055-0172		11	ELBOW WITH TAILPIECE 8/8 MM	
090	90042-0519		4	BLANK PLATE ISO SIZE 1	
320	342715-0103		26	BLIND PLUG 8 MM	
330	342716-0203		4	REDUCER 6-8	
Y5315	90042-0538		1	PILOT VALVE L=500MM	
Y5506	90042-0538		1	PILOT VALVE L=500MM	
A3/FLEX TBA NOQC NODIMC, A3/FLEX TPA NOQC NODIMC, A3/FLEX TGA QC NODIMC (See drawing on page: 2-172)					
010	90042-0215		5	VALVE BODY 5/2 UNISTABLE	
060	90042-0538		1	PILOT VALVE L=500MM	
080	90055-0172		10	ELBOW WITH TAILPIECE 8/8 MM	
090	90042-0519		5	BLANK PLATE ISO SIZE 1	
320	342715-0103		27	BLIND PLUG 8 MM	
330	342716-0203		3	REDUCER 6-8	
Y5315	90042-0538		1	PILOT VALVE L=500MM	
A3/FLEX TPA QC NODIMC, A3/FLEX TBA QC NODIMC (See drawing on page: 2-170)					
010	90042-0215		6	VALVE BODY 5/2 UNISTABLE	
060	90042-0538		1	PILOT VALVE L=500MM	
080	90055-0172		13	ELBOW WITH TAILPIECE 8/8 MM	
090	90042-0519		4	BLANK PLATE ISO SIZE 1	
320	342715-0103		29	BLIND PLUG 8 MM	
330	342716-0203		5	REDUCER 6-8	
Y5315	90042-0538		1	PILOT VALVE L=500MM	
Y5505	90042-0538		1	PILOT VALVE L=500MM	
Common Parts					
020	90042-0520		6	BASE PLATE ISO SIZE 1	
030	90042-0522		2	PORTED END PIECE ISO SIZE 1	
040	90042-0532		4	BASE PLATE ISO SIZE 1	
050	90042-0535		1	TERMINAL BOARD 19 CORDS	
120	90042-0528		6	BLANKING KIT SEALS ISO SIZE 1	
140	90328-0017		1	SILENCER, D=6 MM	
150	90328-0024		2	SILENCER G3/8"	
300	342713-0211		9	PLUG, EXT THREAD HEX SOCKET 8638-00-380	
310	342715-0102		12	BLIND PLUG 6 MM	
420	90458-2960		1	ELBOW PIPE JOINT, EXT.THREAD,D=12MM-G3/8	
Y5200	90042-0538		1	PILOT VALVE L=500MM	
Y5210	90042-0538		1	PILOT VALVE L=500MM	
Y5504	90042-0538		1	PILOT VALVE L=500MM	

Pos	Part No	UN	Qty	Description	Page No

Machine Type | Group Description | Used-In | Group Number | Page No

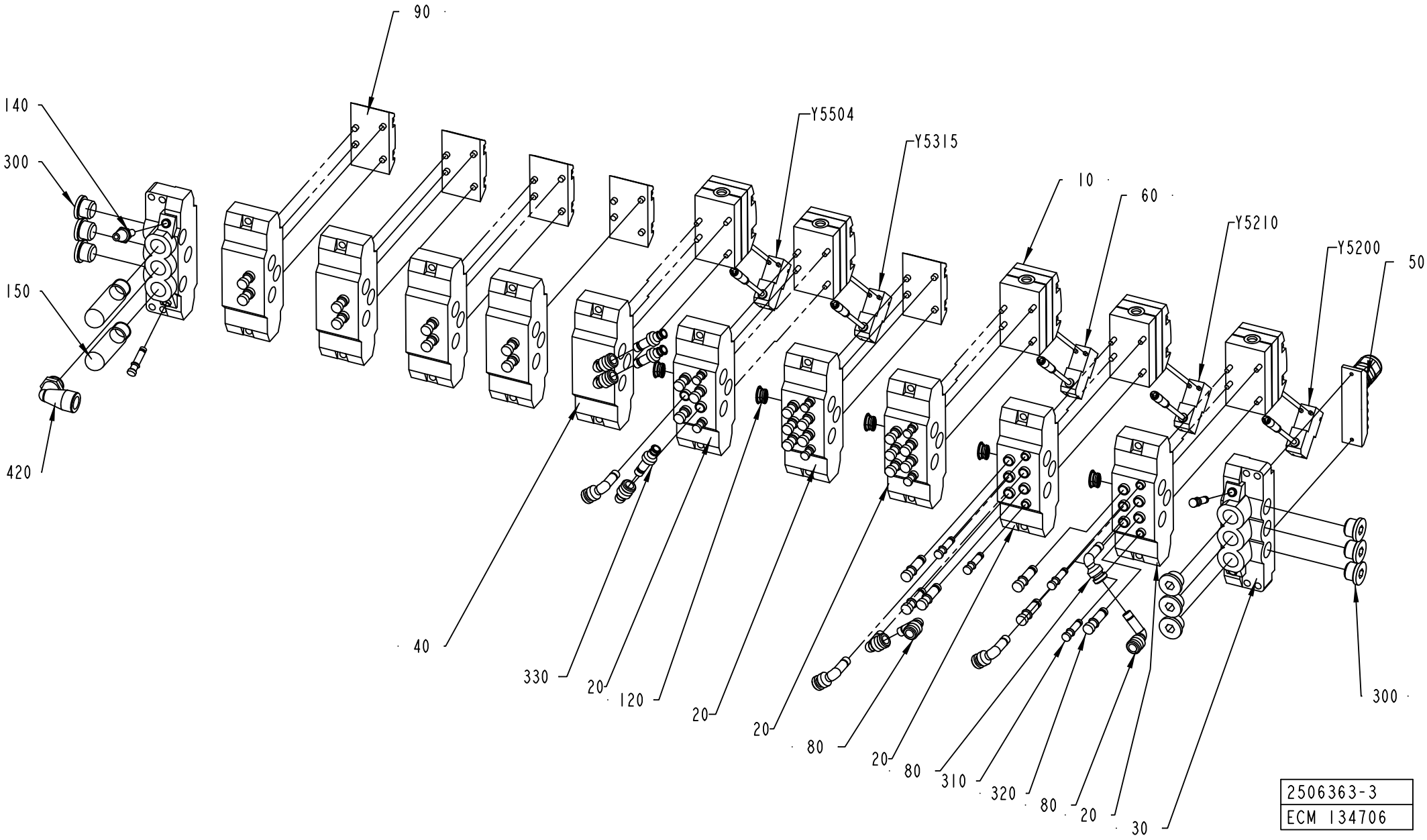
90
140
300
150
420
Y5504
Y5315
10
60
Y5210
Y5200
50
40
330
20
120
20
20
80
20
80
310
320
80
20
30
300
2506363-3
ECM 134706

Pos	Part No	UN	Qty	Description	Page No
A3/FLEX NOQC DIMC/FLEX (See drawing on page: 2-174)					
010	90042-0215		6	VALVE BODY 5/2 UNISTABLE	
060	90042-0538		1	PILOT VALVE L=500MM	
080	90055-0172		11	ELBOW WITH TAILPIECE 8/8 MM	
090	90042-0519		4	BLANK PLATE ISO SIZE 1	
320	342715-0103		26	BLIND PLUG 8 MM	
330	342716-0203		4	REDUCER 6-8	
Y5315	90042-0538		1	PILOT VALVE L=500MM	
Y5506	90042-0538		1	PILOT VALVE L=500MM	
A3/FLEX TBA NOQC NODIMC, A3/FLEX TPA NOQC NODIMC, A3/FLEX TGA QC NODIMC (See drawing on page: 2-172)					
010	90042-0215		5	VALVE BODY 5/2 UNISTABLE	
060	90042-0538		1	PILOT VALVE L=500MM	
080	90055-0172		10	ELBOW WITH TAILPIECE 8/8 MM	
090	90042-0519		5	BLANK PLATE ISO SIZE 1	
320	342715-0103		27	BLIND PLUG 8 MM	
330	342716-0203		3	REDUCER 6-8	
Y5315	90042-0538		1	PILOT VALVE L=500MM	
A3/FLEX TPA QC NODIMC, A3/FLEX TBA QC NODIMC (See drawing on page: 2-170)					
010	90042-0215		6	VALVE BODY 5/2 UNISTABLE	
060	90042-0538		1	PILOT VALVE L=500MM	
080	90055-0172		13	ELBOW WITH TAILPIECE 8/8 MM	
090	90042-0519		4	BLANK PLATE ISO SIZE 1	
320	342715-0103		29	BLIND PLUG 8 MM	
330	342716-0203		5	REDUCER 6-8	
Y5315	90042-0538		1	PILOT VALVE L=500MM	
Y5505	90042-0538		1	PILOT VALVE L=500MM	
Common Parts					
020	90042-0520		6	BASE PLATE ISO SIZE 1	
030	90042-0522		2	PORTED END PIECE ISO SIZE 1	
040	90042-0532		4	BASE PLATE ISO SIZE 1	
050	90042-0535		1	TERMINAL BOARD 19 CORDS	
120	90042-0528		6	BLANKING KIT SEALS ISO SIZE 1	
140	90328-0017		1	SILENCER, D=6 MM	
150	90328-0024		2	SILENCER G3/8"	
300	342713-0211		9	PLUG, EXT THREAD HEX SOCKET 8638-00-380	
310	342715-0102		12	BLIND PLUG 6 MM	
420	90458-2960		1	ELBOW PIPE JOINT, EXT.THREAD,D=12MM-G3/8	
Y5200	90042-0538		1	PILOT VALVE L=500MM	
Y5210	90042-0538		1	PILOT VALVE L=500MM	
Y5504	90042-0538		1	PILOT VALVE L=500MM	

Pos	Part No	UN	Qty	Description	Page No

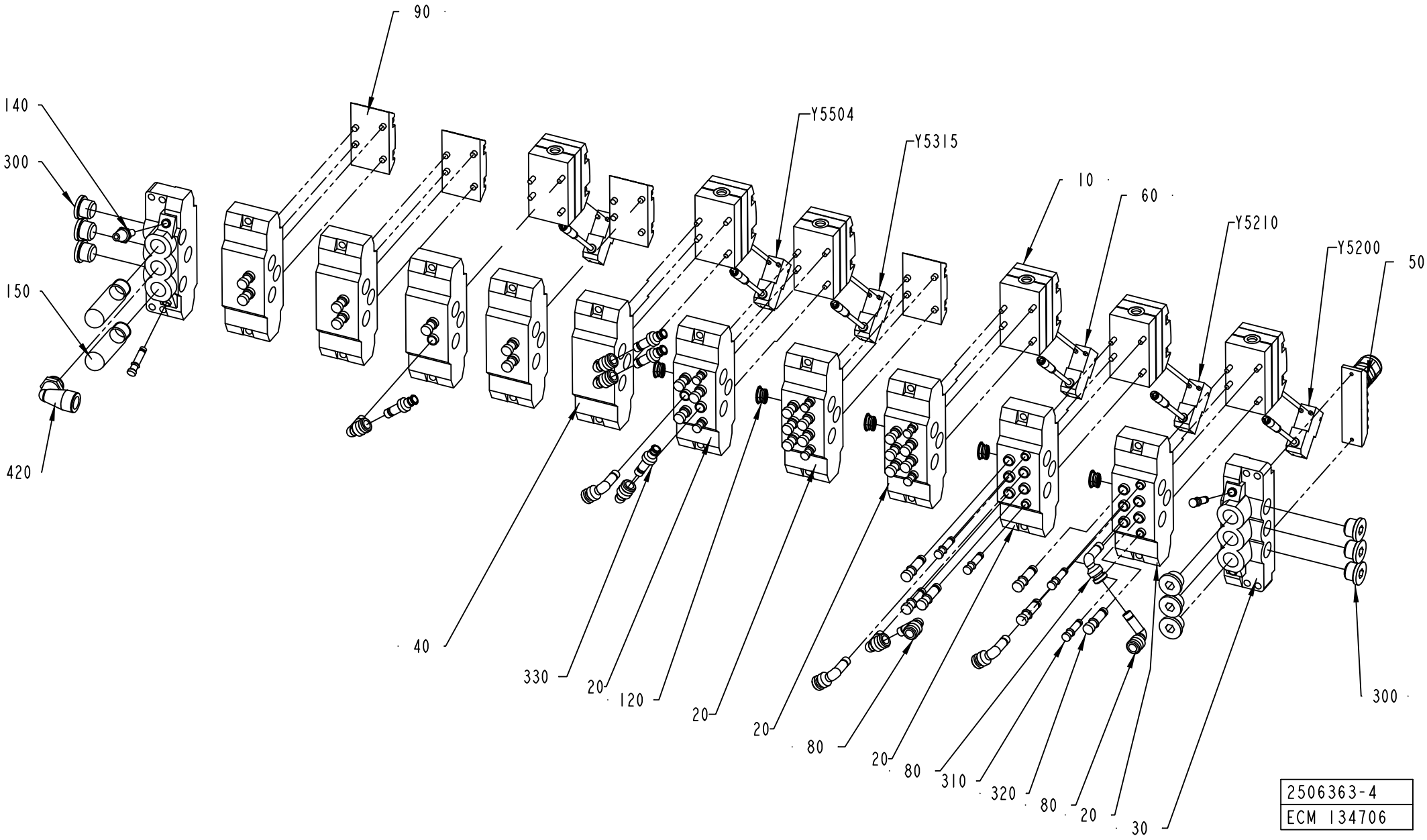
90
140
300
150
420
Y5504
Y5315
10
60
Y5210
Y5200
50
40
330
20
120
20
20
80
20
80
310
320
80
20
30
300
2506363-4
ECM 134706

Pos	Part No	UN	Qty	Description	Page No
A3/FLEX NOQC DIMC/FLEX (See drawing on page: 2-174)					
010	90042-0215		6	VALVE BODY 5/2 UNISTABLE	
060	90042-0538		1	PILOT VALVE L=500MM	
080	90055-0172		11	ELBOW WITH TAILPIECE 8/8 MM	
090	90042-0519		4	BLANK PLATE ISO SIZE 1	
320	342715-0103		26	BLIND PLUG 8 MM	
330	342716-0203		4	REDUCER 6-8	
Y5315	90042-0538		1	PILOT VALVE L=500MM	
Y5506	90042-0538		1	PILOT VALVE L=500MM	
A3/FLEX TBA NOQC NODIMC, A3/FLEX TPA NOQC NODIMC, A3/FLEX TGA QC NODIMC (See drawing on page: 2-172)					
010	90042-0215		5	VALVE BODY 5/2 UNISTABLE	
060	90042-0538		1	PILOT VALVE L=500MM	
080	90055-0172		10	ELBOW WITH TAILPIECE 8/8 MM	
090	90042-0519		5	BLANK PLATE ISO SIZE 1	
320	342715-0103		27	BLIND PLUG 8 MM	
330	342716-0203		3	REDUCER 6-8	
Y5315	90042-0538		1	PILOT VALVE L=500MM	
A3/FLEX TPA QC NODIMC, A3/FLEX TBA QC NODIMC (See drawing on page: 2-170)					
010	90042-0215		6	VALVE BODY 5/2 UNISTABLE	
060	90042-0538		1	PILOT VALVE L=500MM	
080	90055-0172		13	ELBOW WITH TAILPIECE 8/8 MM	
090	90042-0519		4	BLANK PLATE ISO SIZE 1	
320	342715-0103		29	BLIND PLUG 8 MM	
330	342716-0203		5	REDUCER 6-8	
Y5315	90042-0538		1	PILOT VALVE L=500MM	
Y5505	90042-0538		1	PILOT VALVE L=500MM	
Common Parts					
020	90042-0520		6	BASE PLATE ISO SIZE 1	
030	90042-0522		2	PORTED END PIECE ISO SIZE 1	
040	90042-0532		4	BASE PLATE ISO SIZE 1	
050	90042-0535		1	TERMINAL BOARD 19 CORDS	
120	90042-0528		6	BLANKING KIT SEALS ISO SIZE 1	
140	90328-0017		1	SILENCER, D=6 MM	
150	90328-0024		2	SILENCER G3/8"	
300	342713-0211		9	PLUG, EXT THREAD HEX SOCKET 8638-00-380	
310	342715-0102		12	BLIND PLUG 6 MM	
420	90458-2960		1	ELBOW PIPE JOINT, EXT.THREAD,D=12MM-G3/8	
Y5200	90042-0538		1	PILOT VALVE L=500MM	
Y5210	90042-0538		1	PILOT VALVE L=500MM	
Y5504	90042-0538		1	PILOT VALVE L=500MM	

Pos	Part No	UN	Qty	Description	Page No

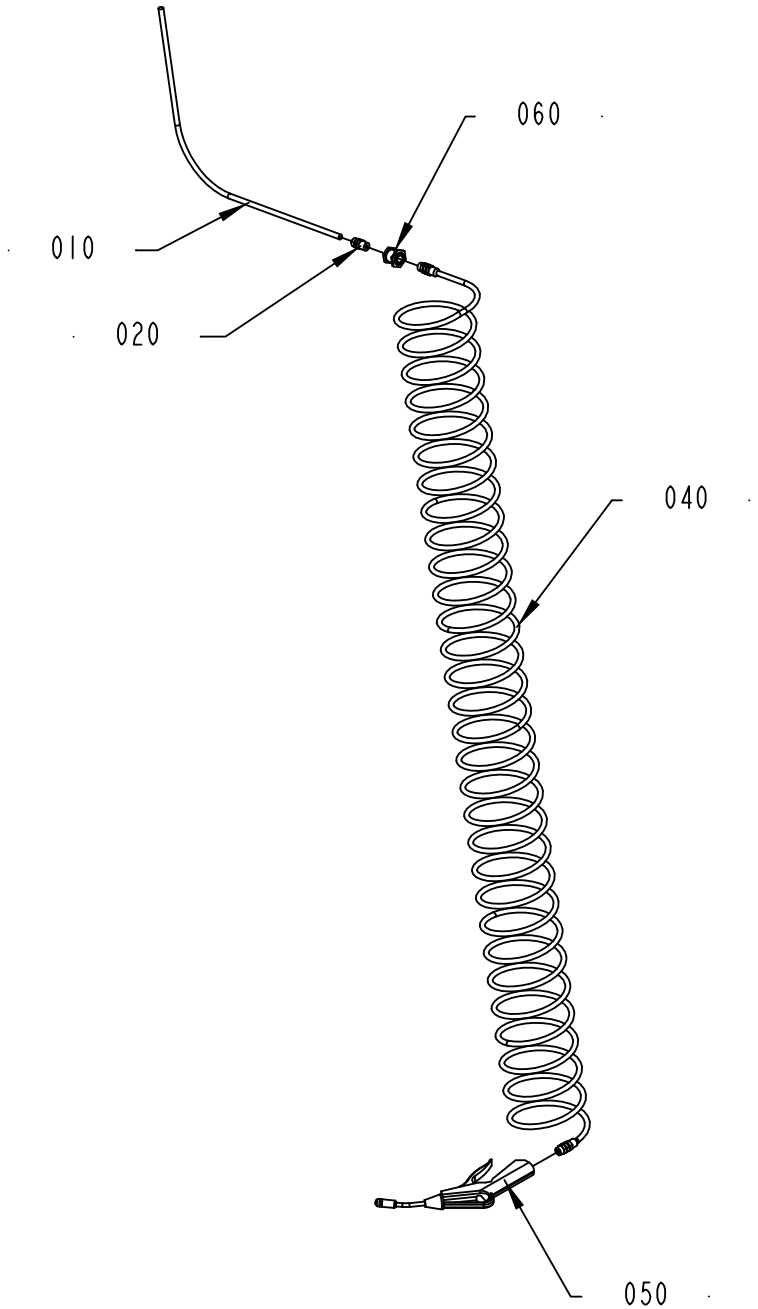
060
010
020
040
050
1095682-1
313511

ECM: 339755 - 20080402
Group number: 1095682-0100
Assembly Drawing: 1095682-1_1_AB

Pos	Part No	UN	Qty	Description	Page No
-					
010	90166-0013	MM	1800	TUBE 8 MM PA BLUE	
020	342920-0122		1	STRAIGHT COUPLING,EXT.THREADED 8/6-R1/4"	
030	342767-0104		1	CONN. BULKHEAD G1/4	
040	90152-0016		1	HOSE (SPIRAL)	
050	90459-0173		1	AIR GUN ASSEMBLY, CEJN SERIE 208	

Pos	Part No	UN	Qty	Description	Page No

PIVOT ARM

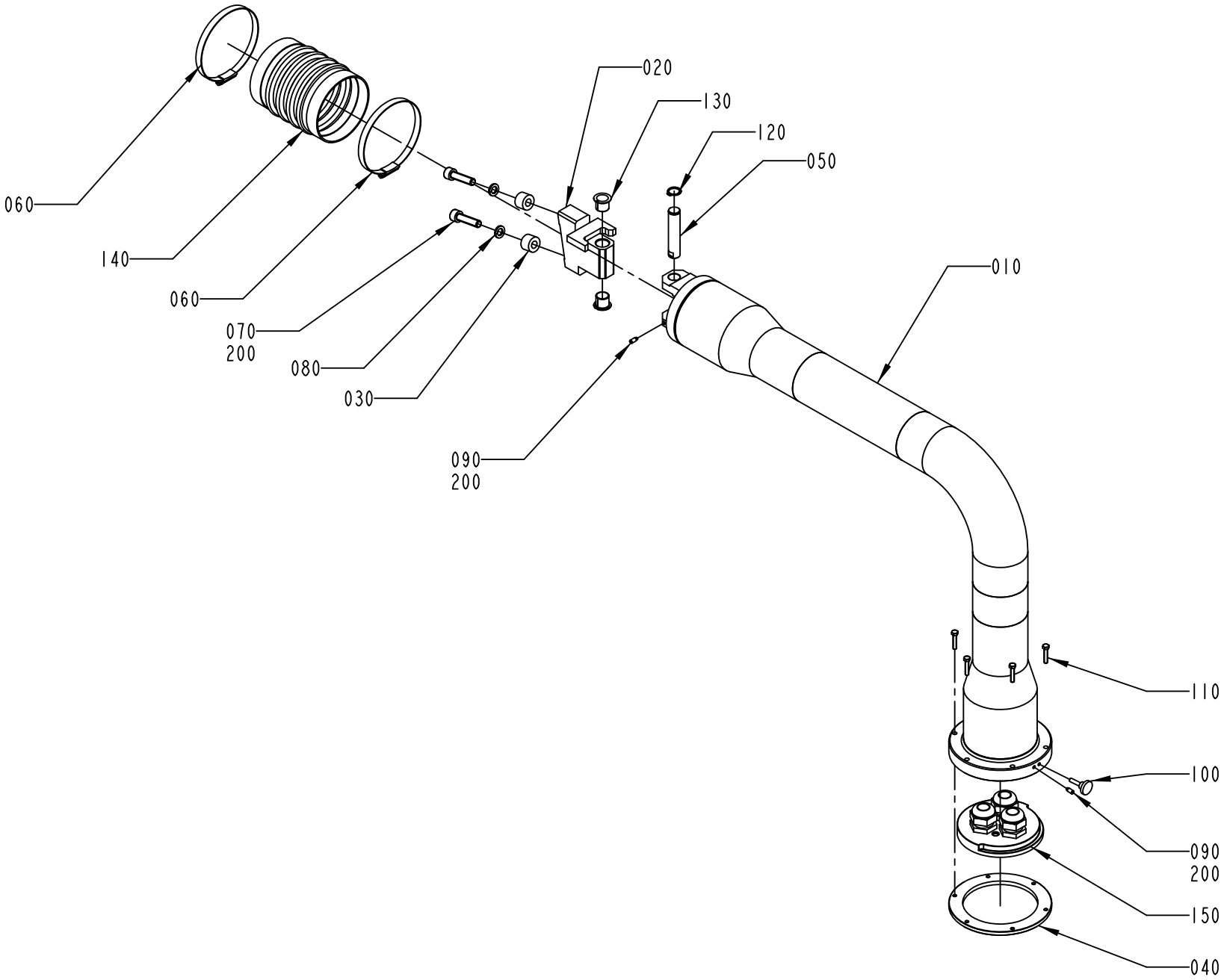

1095863-2
ECM 116300

ECM: 189861 - 20041104
Group number: 1095863-0200
Assembly Drawing: 1095863-2_1_AA

Pos	Part No	UN	Qty	Description	Page No
-					
010	1558974-0000		1	PIPE BRACKET	
020	1558975-0000		1	BLOCKING PIECE	
030	1254494-0000		1	SPACER	
040	1558949-0000		1	PLATE	
050	1558945-0000		1	PIVOT PIN	
060	342991-0114		2	HOSE CLIP,WORM DRIVE TYPE (93)-110	
070	312115-0499		2	SCREW ISO4762 M10X40 A4 80	
080	315402-0173		2	LOCK WASHER FBB 10,2	
090	312311-0327		2	SCREW ISO4028 M5X12 FZB	
100	318860-0106		1	KNOB, ADJUST.HI.EXT.THREAD, NO 8324-3674	
110	312105-0333		6	SCREW M6S ISO 4017 M5X25 A480	
120	315751-0113		1	RETAINING RING FOR SHAFT DIN 471 16 SS	
130	321161-0221		2	FLANGE BUSHING, 16X18X17 MM	
140	90342-0024		1	RUBBER BELLOWS, 100X100 MM	
150	2570616-0100		1	FASTENING PLATE	**2-181**
200	90157-0021	KG	1	LOCKING FLUID LOCTITE 270	

Pos	Part No	UN	Qty	Description	Page No

Machine Type | Group Description | Used-In | Group Number | Page No

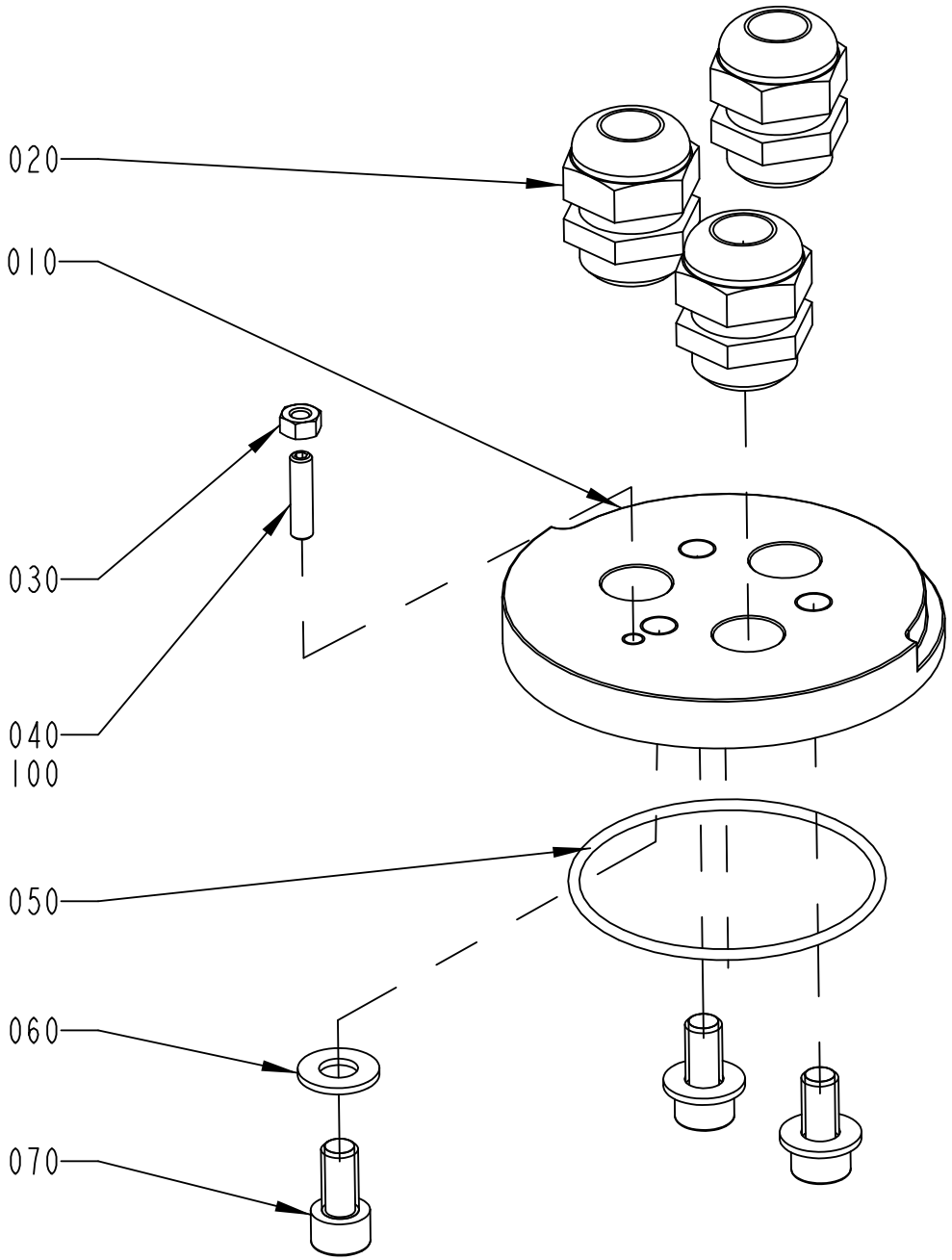

2570616-1
ECM 116300

ECM: 224853 - 20050831
Group number: 2570616-0100
Assembly Drawing: 2570616-1_1_AA

Pos	Part No	UN	Qty	Description	Page No
-					
010	1558948-0000		1	PLATE	
020	352103-0115		3	CABLE GLAND, STR 21, PR28,3/PG21	
030	312605-0316		1	HEXAGON NUT, M6M M6 A280	
040	312318-0372		1	SCREW ISO4029 M6X25 A4	
050	315202-0307		1	O-RING 79,5X3 MM	
060	315105-0173		3	WASHER BRB 10,5X22 RFR	
070	312115-0491		3	SCREW ISO4762 M10X20 A4 80	
100	90157-0021		1	LOCKING FLUID LOCTITE 270	

Pos	Part No	UN	Qty	Description	Page No

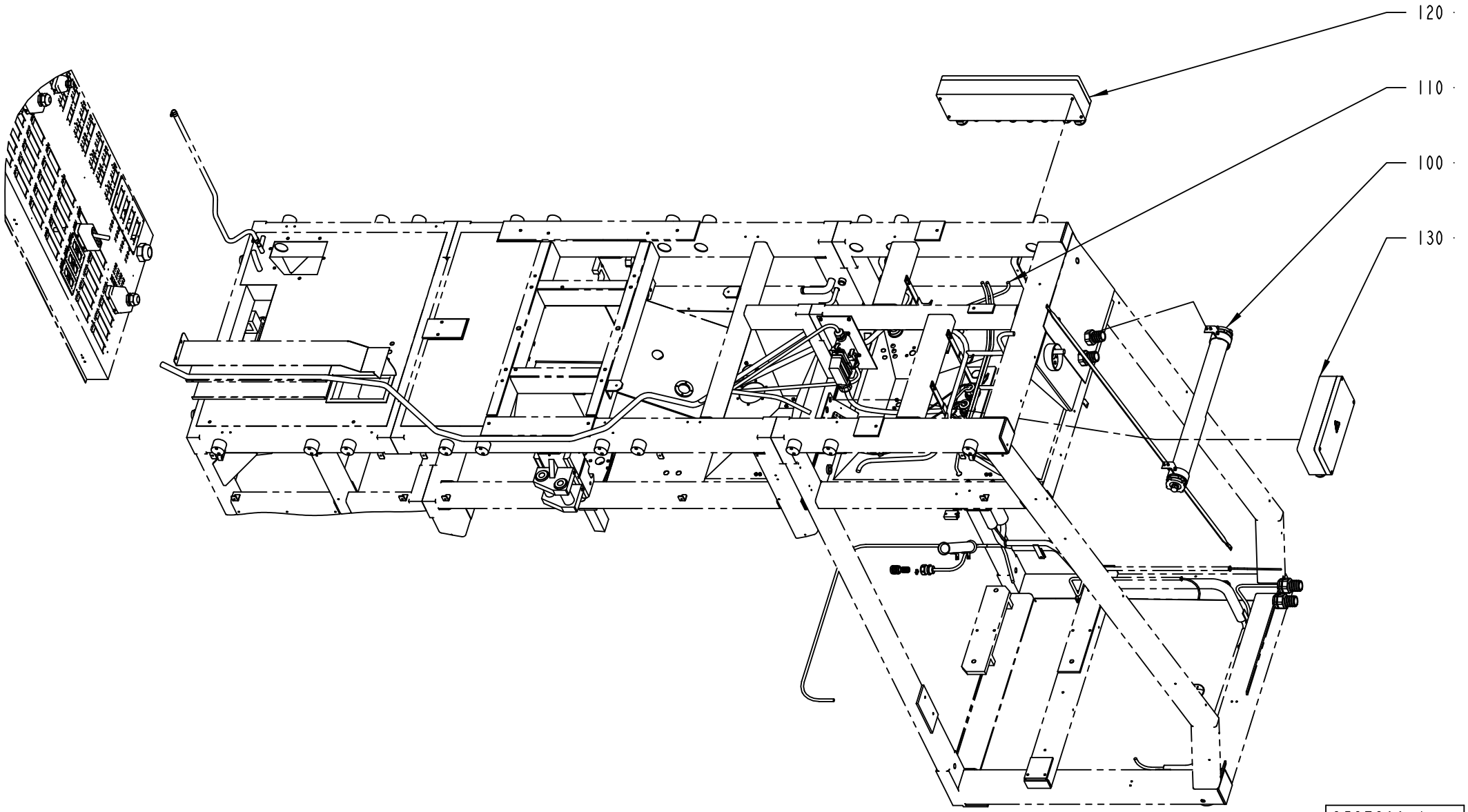

2527300-1
ECM 117203

ECM: 274235 - 20061101
Group number: 2527300-0150
Assembly Drawing: 2527300-1_1_AA

Pos	Part No	UN	Qty	Description	Page No
A3/FLEX TGA (See drawing on page: 2-182)					
110	2773525-0100		1	CABLE HARNESS	**2-185, 2-187**
A3/FLEX TBA, A3/FLEX TPA (See drawing on page: 2-182)					
110	2527295-0150		1	CABLE HARNESS	**2-189, 2-191, 2-193**
Common Parts					
100	2504790-0100		1	LIGHT FIXTURE	**2-97**
120	2527297-0100		1	CONNECTION BOX	**2-195, 2-197**
130	2527299-0100		1	CONNECTION BOX	**2-199**

Pos	Part No	UN	Qty	Description	Page No

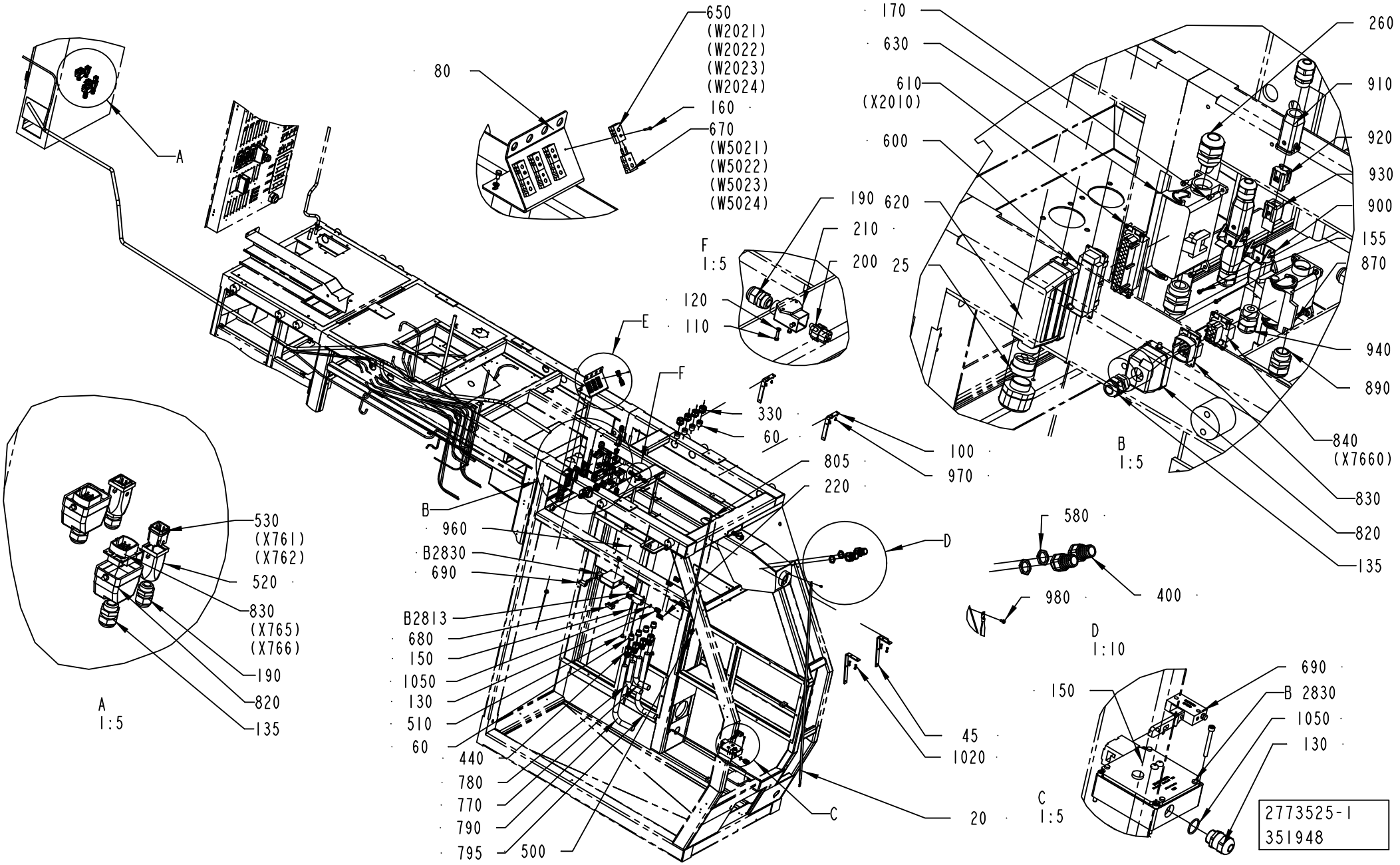
650
(W2021)
(W2022)
(W2023)
(W2024)
80
160
670
(W5021)
(W5022)
(W5023)
(W5024)
A
170
630
610
(X2010)
600
190
620
210
200
25
F
1:5
120
110
E
F
330
60
805
220
100
970
B
960
B2830
690
B2813
680
150
1050
130
510
60
440
780
770
790
795
500
C
20
45
1020
D
580
980
400
D
1:10
690
150
B 2830
1050
130
C
1:5
260
910
920
930
900
155
870
940
890
840
(X7660)
830
820
135
B
1:5
530
(X761)
(X762)
520
830
(X765)
(X766)
190
820
135
A
1:5
2773525-1
351948

ECM: 360648 - 20081001
Group number: 2773525-0100
Assembly Drawing: 2773525-1_1_AE

This list covers pages from 2-184 to 2-187

Pos	Part No	UN	Qty	Description	Page No
-					
020	1129600-0000		1	BRAID	
025	2546498-0000		1	INSERT	
045	2520430-0000		2	HOLDER	
060	1484379-0000		8	INSERT	
080	2509941-0000		1	SUPPORT	
100	2520431-0000		2	SUPPORT	
1020	315105-0153		11	WASHER BRB 6,4X12 RFR	
1050	315206-0707		3	O-RING 20,35X1,78 MM	
110	312125-0226		4	SCREW ISO 1207 M3X12 A4	
120	315105-0124		4	WASHER BRB 3,2X6 RFR	
130	90458-0307		3	CABLE GLAND, M20X1,5, NO.5311 1020	
135	352103-0108		8	CABLE GLAND, ST 13,5 , PR20,4/PG13,5	
150	312115-0340		10	SCREW ISO4762 M5X45 A4 80	
155	312125-0222		4	SCREW ISO 1207 M3X8 A4	
160	312125-0228		4	SCREW ISO 1207 M3X16 A4	
170	312125-0287		8	SCREW ISO 1207 M4X8 A4	
180	352103-0121		4	CABLE GLAND, ST 29, PR37,0/PG29	
190	352103-0106		4	CABLE GLAND, ST 11, PR18,6/PG11	
200	90110-0296		2	FEMALE INSERT HDC-HA-4BS 149840-B/2	
210	90110-0370		2	BASE HOUSING	
220	353101-0153		4	CABLE SHOE 4,0-6,0MM2 M6 YELLOW	
260	352103-0115		1	CABLE GLAND, STR 21, PR28,3/PG21	
330	353241-0003		5	GLAND W/O INSERT PG21 EXTENDED	
400	353243-0008		2	HOSE GLAND W/O INSERT PG29 EXTENDED	
440	353247-0005		4	HOSE GLAND EMC PG21 EXTENDED	
500	90015-0020		2	LEAD-IN, TET5-7, E-1458016	
510	90015-0023		3	LEAD-IN, TET7-10, E-1458019	
520	90459-1045		2	HOOD, HDC HA3 TOVL 1XM20G	
530	90459-6821		2	MALE INSERT HAN 4A, 09 20 004 2611	
580	90099-0120		2	NUT, PR 37 (PG29)	
600	90110-0150		8	MALE INSERT 121110 0000	
610	90110-0151		1	FEMALE INSERT 24-POL 121130 0000	
620	90110-0228		1	CABLE HOOD 24-POL 71.350.2428.0	
630	90110-0513		1	CHASSIS HOUSING, CHP 24L S2	
650	90326-0020		8	PLUG, FEMALE YELLOW CR-AL	
670	90326-0022		8	PLUG, MALE YELLOW CR-AL	
680	90457-0194		1	KEY FOR SAF.SW.048850-C2052	
690	90457-0195		2	KEY FOR SAF.SW.TZRE024PG RC1635-057950	
770	90152-0070	MM	700	METAL HOSE, 32,5X26, UL 2621	
780	90152-0070	MM	700	METAL HOSE, 32,5X26, UL 2621	
790	90152-0070	MM	700	METAL HOSE, 32,5X26, UL 2621	
795	90152-0070	MM	700	METAL HOSE, 32,5X26, UL 2621	
805	90166-0081	MM	3000	TUBE 6 MM PA BLUE	
810	90110-0152		7	CABLE HOOD 24-POL 70.352.2428.1	
820	90110-0157		8	CABLE HOOD 6-POL 70.352.0628.1	
830	90110-0159		8	MALE INSERT 70.310.0640.0	
840	90110-0163		1	FEMALE INSERT 70 300 0640 0	
850	90110-0381		1	COVER, 310601-33 CYR24.4	
870	90110-0221		1	CHASSIS HOUSING 310162-33	
890	352103-0111		1	CABLE GLAND, ST 16, PR22,5/PG16	
900	90459-3081		2	HOUSING HAN A 19 20 003 1250	
910	90459-3080		2	HOOD HAN-BRID 3A 19 20 003 1443	
920	90459-3082		2	MALE INSERT HAN-BRID RJ45 09 12 003 3001	
930	90459-3083		2	FEMALE INSERT HAN-BRID RJ45 09 120032790	
940	90458-0315		4	CABLE GLAND, M20X1,5, NO.5311 1120	
960	312605-0314		2	HEXAGON NUT, M6M M5 A280	
970	312105-0366		3	SCREW M6S ISO 4017 M6X12 A480	
980	312105-0364		1	SCREW M6S ISO 4017 M6X10 A480	
990	352103-0120		2	CABLE GLAND, STR 29, PR37,0/PG29	
B2810	90457-0196		1	KEY SAF.SW. TZ2RE024PG RC1635	
B2813	90044-0204		1	KEY SAF.SW. NZIVZ-538-E	
B2830	90457-0196		1	KEY SAF.SW. TZ2RE024PG RC1635	
W0001	351150-0430	M	8	CABLE OLFLEX 5X35 MM2 LIGHT/GREY	
W2010	351150-0425	MM	8500	CABLE OLFLEX 25X0,75 MM2 LIGHT/GREY	
W2011	351150-0425	MM	8000	CABLE OLFLEX 25X0,75 MM2 LIGHT/GREY	
W2014	351150-0413	MM	7500	CABLE OLFLEX 4GX1,5 MM2 LIGHT/GREY	
W2015	90220-0104	MM	7500	SCR. CABLE 4X1,5MM2	
W2016	351150-0412	MM	8500	CABLE OLFLEX 3X1,5 MM2 LIGHT/GREY	
W2017	351150-0417	MM	2500	CABLE OLFLEX 3X2,5 MM2 LIGHT/GREY	
W2018	351150-0417	MM	2500	CABLE OLFLEX 3X2,5 MM2 LIGHT/GREY	
W2021	90220-0034	MM	7000	THERMOCABLE TEX/SITW-20F-KX 2X0,5MM2	
W2022	90220-0034	MM	7000	THERMOCABLE TEX/SITW-20F-KX 2X0,5MM2	
W2023	90220-0034	MM	7000	THERMOCABLE TEX/SITW-20F-KX 2X0,5MM2	
W2024	90220-0034	MM	7000	THERMOCABLE TEX/SITW-20F-KX 2X0,5MM2	
W2025	351150-0417	MM	2500	CABLE OLFLEX 3X2,5 MM2 LIGHT/GREY	
W2026	351150-0417	MM	2500	CABLE OLFLEX 3X2,5 MM2 LIGHT/GREY	
W2030	351150-0425	MM	8000	CABLE OLFLEX 25X0,75 MM2 LIGHT/GREY	
W2066	90458-2557	MM	9500	CABLE OLFLEX 25X1 MM2	
W2067	90458-2557	MM	9500	CABLE OLFLEX 25X1 MM2	
W2068	1363297-0000		1	CABLE LVDS 10M	
W2073	351150-0412	M	9	CABLE OLFLEX 3X1,5 MM2 LIGHT/GREY	
W2074	351150-0412	M	9	CABLE OLFLEX 3X1,5 MM2 LIGHT/GREY	
W2212	351150-0405	MM	4000	CABLE OLFLEX 5X0,75 MM2 LIGHT/GREY	

Machine Type | Group Description | Used-In | Group Number | Page No

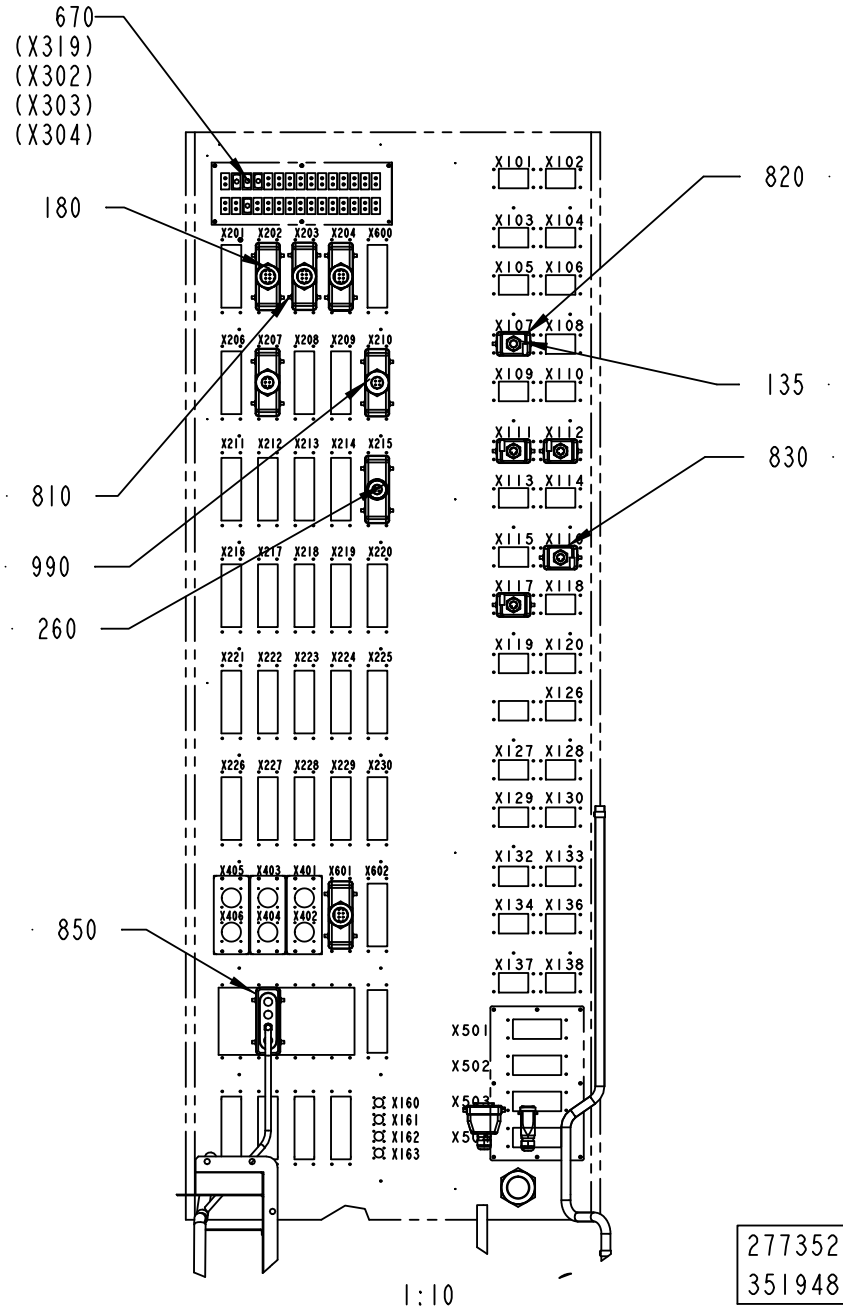
670
(X319)
(X302)
(X303)
(X304)
180
810
990
260
850
820
135
830
X101 X102
X103 X104
X105 X106
X107 X108
X109 X110
X111 X112
X113 X114
X115 X116
X117 X118
X119 X120
X126
X127 X128
X129 X130
X132 X133
X134 X136
X137 X138
X201 X202 X203 X204 X600
X206 X207 X208 X209 X210
X211 X212 X213 X214 X215
X216 X217 X218 X219 X220
X221 X222 X223 X224 X225
X226 X227 X228 X229 X230
X405 X403 X401 X601 X602
X406 X404 X402
X160
X161
X162
X163
X501
X502
X503
X504
1:10
2773525-1
351948

ECM: 360648 - 20081001
Group number: 2773525-0100
Assembly Drawing: 2773525-1_2_AE

This list covers pages from 2-184 to 2-187

Pos	Part No	UN	Qty	Description	Page No
- (Cont'd)					
W2224	351150-0406	MM	3000	CABLE OLFLEX 7X0,75 MM2 LIGHT/GREY	
W2227	351150-0405	M	2.5	CABLE OLFLEX 5X0,75 MM2 LIGHT/GREY	
W2228	351150-0406	MM	2500	CABLE OLFLEX 7X0,75 MM2 LIGHT/GREY	
W4005	351150-0419	MM	7000	CABLE OLFLEX 5X2,5 MM2 LIGHT/GREY	
W4006	351150-0419	MM	7000	CABLE OLFLEX 5X2,5 MM2 LIGHT/GREY	
W4502	2570004-0001		1	CABLE	
W4503	2570004-0001		1	CABLE	
W4505	90459-1812		1	CABLE, ETHERNET RJ 45 CONNECT. 8 M	
W4506	351150-0425	MM	8000	CABLE OLFLEX 25X0,75 MM2 LIGHT/GREY	
W4507	90459-1812		1	CABLE, ETHERNET RJ 45 CONNECT. 8 M	
W5002	351150-0413	MM	5000	CABLE OLFLEX 4GX1,5 MM2 LIGHT/GREY	
W5003	90220-0104	MM	1500	SCR. CABLE 4X1,5MM2	
W5004	351150-0412	MM	2500	CABLE OLFLEX 3X1,5 MM2 LIGHT/GREY	
W5021	90220-0034	M	2.5	THERMOCABLE TEX/SITW-20F-KX 2X0,5MM2	
W5022	90220-0034	M	2.5	THERMOCABLE TEX/SITW-20F-KX 2X0,5MM2	
W5023	90220-0034	M	2.5	THERMOCABLE TEX/SITW-20F-KX 2X0,5MM2	
W5700	351150-0403	MM	1500	CABLE OLFLEX 3X0,75 MM2 LIGHT/GREY	
W729	90220-0107	M	7	SCR. CABLE 5X0,75MM2	
W765	351150-0413	M	8	CABLE OLFLEX 4GX1,5 MM2 LIGHT/GREY	

Pos	Part No	UN	Qty	Description	Page No

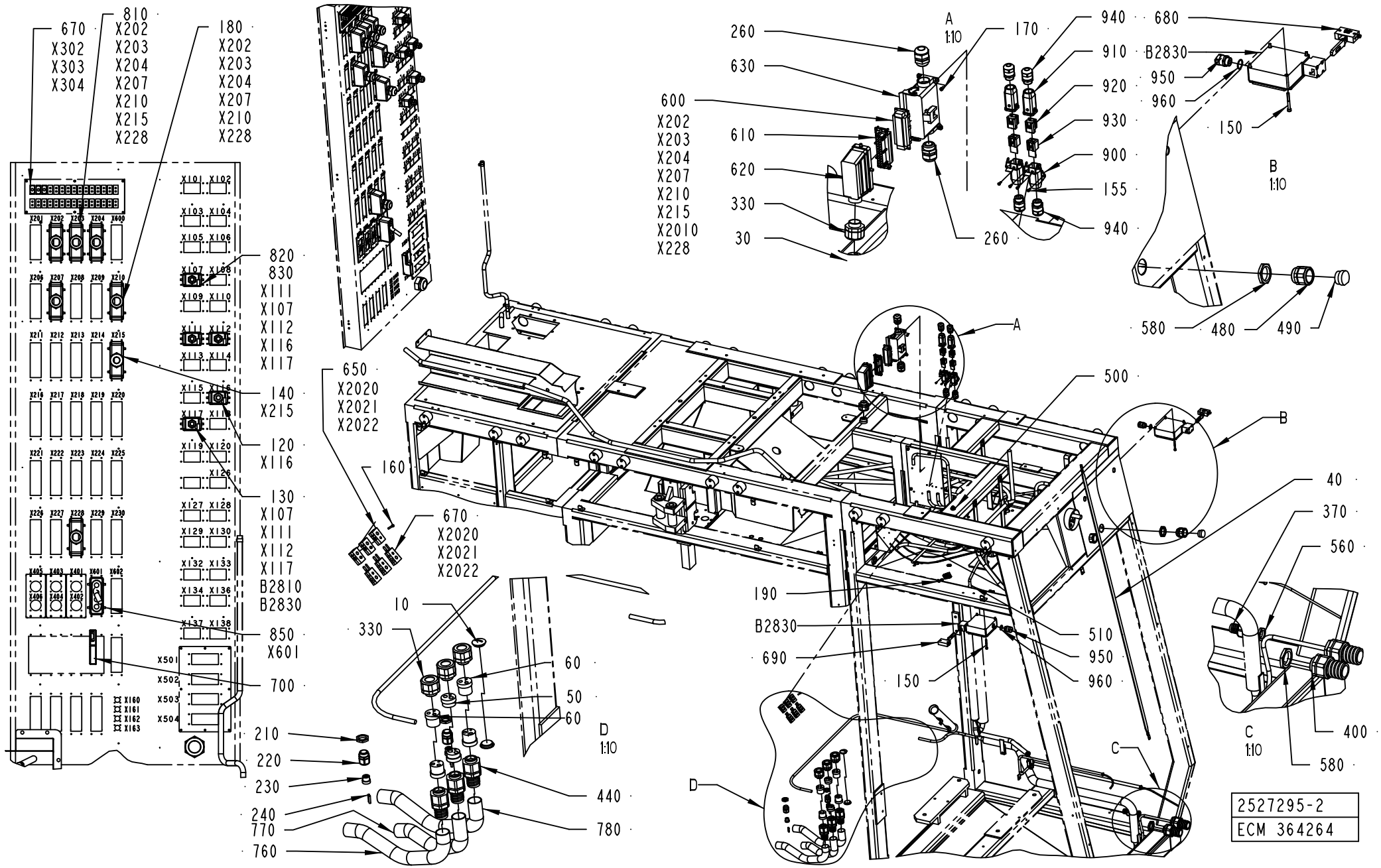
670
X302
X303
X304
810
X202
X203
X204
X207
X210
X215
X228
180
X202
X203
X204
X207
X210
X228
820
830
X111
X107
X112
X116
X117
140
X215
120
X116
130
X107
X111
X112
X117
B2810
B2830
850
X601
700
210
220
230
240
770
760
650
X2020
X2021
X2022
160
670
X2020
X2021
X2022
10
330
60
50
60
D
1:10
440
780
260
630
600
X202
X203
X204
X207
X210
X215
X2010
X228
610
620
330
30
A
1:10
260
170
940
910
920
930
900
155
940
680
B2830
950
960
150
B
1:10
580
480
490
A
500
B
190
B2830
690
150
510
950
960
C
D
40
370
560
400
580
C
1:10
2527295-2
ECM 364264

ECM: 370543 - 20090101
Group number: 2527295-0150
Assembly Drawing: 2527295-2_1_AD

This list covers pages from 2-188 to 2-193

Pos	Part No	UN	Qty	Description	Page No
A3/FLEX NOQC (See drawing on pages: 2-188, 2-190, 2-192)					
130	352103-0108		4	CABLE GLAND, ST 13,5 , PR20,4/PG13,5	
230	353249-0042		2	INSERT, SOLID, E152G	
820	90110-0157		5	CABLE HOOD 6-POL 70.352.0628.1	
830	90110-0159		5	MALE INSERT 70.310.0640.0	
W5700	351150-0403	MM	1500	CABLE OLFLEX 3X0,75 MM2 LIGHT/GREY	
A3/FLEX QC (See drawing on pages: 2-188, 2-190, 2-192)					
130	352103-0108		4	CABLE GLAND, ST 13,5 , PR20,4/PG13,5	
230	2914569-0000		2	INSERT	
820	90110-0157		5	CABLE HOOD 6-POL 70.352.0628.1	
830	90110-0159		5	MALE INSERT 70.310.0640.0	
W5700	351150-0403	MM	1500	CABLE OLFLEX 3X0,75 MM2 LIGHT/GREY	
Common Parts					
010	90002-0012		2	BLANK-OFF PLUG, PR 28,3 SKINDICHT-BLK21	
030	2527371-0000		1	INSERT	
040	1129600-0000		1	BRAID	
050	1484093-0000		2	INSERT	
060	1484379-0000		4	INSERT	
120	352103-0110		1	CABLE GLAND, STR 16, PR22,5/PG16	
140	352103-0120		1	CABLE GLAND, STR 29, PR37,0/PG29	
150	312115-0340		8	SCREW ISO4762 M5X45 A4 80	
155	312125-0222		4	SCREW ISO 1207 M3X8 A4	
160	312125-0228		3	SCREW ISO 1207 M3X16 A4	
170	312125-0287		4	SCREW ISO 1207 M4X8 A4	
180	352103-0121		6	CABLE GLAND, ST 29, PR37,0/PG29	
190	353101-0153		1	CABLE SHOE 4,0-6,0MM2 M6 YELLOW	
210	90099-0118		2	NUT, PR 20,4 (PG13,5)	
220	353240-0003		2	GLAND W/O INSERT PG13,5 NORMAL	
240	353249-0301		3	SEALING PIN, 4X20	
260	352103-0115		2	CABLE GLAND, STR 21, PR28,3/PG21	
330	353241-0003		4	GLAND W/O INSERT PG21 EXTENDED	
370	353243-0005		1	HOSE GLAND W/O INSERT PG16 EXTENDED	
400	353243-0008		2	HOSE GLAND W/O INSERT PG29 EXTENDED	
440	353247-0005		3	HOSE GLAND EMC PG21 EXTENDED	
480	353249-0049		2	INSERT, SOLID, EK155G	
490	353240-0006		2	GLAND W/O INSERT PG29 NORMAL	
500	90015-0020		3	LEAD-IN, TET5-7, E-1458016	
510	90015-0023		5	LEAD-IN, TET7-10, E-1458019	
560	90099-0110		1	NUT, PR 22,5 (PG16)	
580	90099-0120		4	NUT, PR 37 (PG29)	
600	90110-0150		8	MALE INSERT 121110 0000	
610	90110-0151		1	FEMALE INSERT 24-POL 121130 0000	
620	90110-0228		1	CABLE HOOD 24-POL 71.350.2428.0	
630	90110-0513		1	CHASSIS HOUSING, CHP 24L S2	
650	90326-0020		3	PLUG, FEMALE YELLOW CR-AL	
670	90326-0022		6	PLUG, MALE YELLOW CR-AL	
680	90600-5274		1	KEY FOR SAF.SW.TZRE024PG RC1635-103845 Z	
690	90600-5275		1	KEY FOR SAF.SW.TZRE024PG RC1635-104068 Z	
700	90459-2551		1	CONNECTOR, MOTOR FEEDBACK 15 PIN MALE	
760	90152-0070	MM	490	METAL HOSE, 32,5X26, UL 2621	
770	90152-0070	MM	360	METAL HOSE, 32,5X26, UL 2621	
780	90152-0070	MM	510	METAL HOSE, 32,5X26, UL 2621	
810	90110-0152		7	CABLE HOOD 24-POL 70.352.2428.1	
850	90110-0381		1	COVER, 310601-33 CYR24.4	
860	359005-0010		13	MARKING LABEL KIT 0 - 9, 04.841.2150.0	
870	359005-0050		12	MARKING LABEL KIT X, 04.841.4550.0	
890	90110-0385		12	MARKING HOLDER, 4.242.3853.0	
900	90459-3081		2	HOUSING HAN A 19 20 003 1250	
910	90459-3080		2	HOOD HAN-BRID 3A 19 20 003 1443	
920	90459-3082		2	MALE INSERT HAN-BRID RJ45 09 12 003 3001	
930	90459-3083		2	FEMALE INSERT HAN-BRID RJ45 09 120032790	
940	90458-0315		4	CABLE GLAND, M20X1,5, NO.5311 1120	
950	90458-0307		2	CABLE GLAND, M20X1,5, NO.5311 1020	
960	315206-0707		2	O-RING 20,35X1,78 MM	
B2810	90457-0196		1	KEY SAF.SW. TZ2RE024PG RC1635	
B2830	90457-0196		1	KEY SAF.SW. TZ2RE024PG RC1635	
W0001	351150-0430	M	8	CABLE OLFLEX 5X35 MM2 LIGHT/GREY	
W2010	351150-0425	MM	7400	CABLE OLFLEX 25X0,75 MM2 LIGHT/GREY	
W2011	351150-0425	MM	7000	CABLE OLFLEX 25X0,75 MM2 LIGHT/GREY	
W2014	351150-0413	MM	7000	CABLE OLFLEX 4GX1,5 MM2 LIGHT/GREY	
W2015	90220-0104	MM	6900	SCR. CABLE 4X1,5MM2	
W2016	351150-0412	MM	8000	CABLE OLFLEX 3X1,5 MM2 LIGHT/GREY	
W2017	351150-0412	MM	2000	CABLE OLFLEX 3X1,5 MM2 LIGHT/GREY	
W2018	351150-0412	MM	2000	CABLE OLFLEX 3X1,5 MM2 LIGHT/GREY	
W2019	351150-0412	MM	2000	CABLE OLFLEX 3X1,5 MM2 LIGHT/GREY	
W2021	90220-0034	MM	7500	THERMOCABLE TEX/SITW-20F-KX 2X0,5MM2	
W2022	90220-0034	MM	7500	THERMOCABLE TEX/SITW-20F-KX 2X0,5MM2	
W2023	90220-0034	MM	7500	THERMOCABLE TEX/SITW-20F-KX 2X0,5MM2	
W2030	351150-0425	MM	7500	CABLE OLFLEX 25X0,75 MM2 LIGHT/GREY	
W2066	90458-2557	MM	9100	CABLE OLFLEX 25X1 MM2	
W2067	90458-2557	MM	9100	CABLE OLFLEX 25X1 MM2	
W2068	1363297-0000		1	CABLE LVDS 10M	
W2212	351150-0405	MM	4000	CABLE OLFLEX 5X0,75 MM2 LIGHT/GREY	
W2224	351150-0406	MM	1500	CABLE OLFLEX 7X0,75 MM2 LIGHT/GREY	

Machine Type | Group Description | Used-In | Group Number | Page No

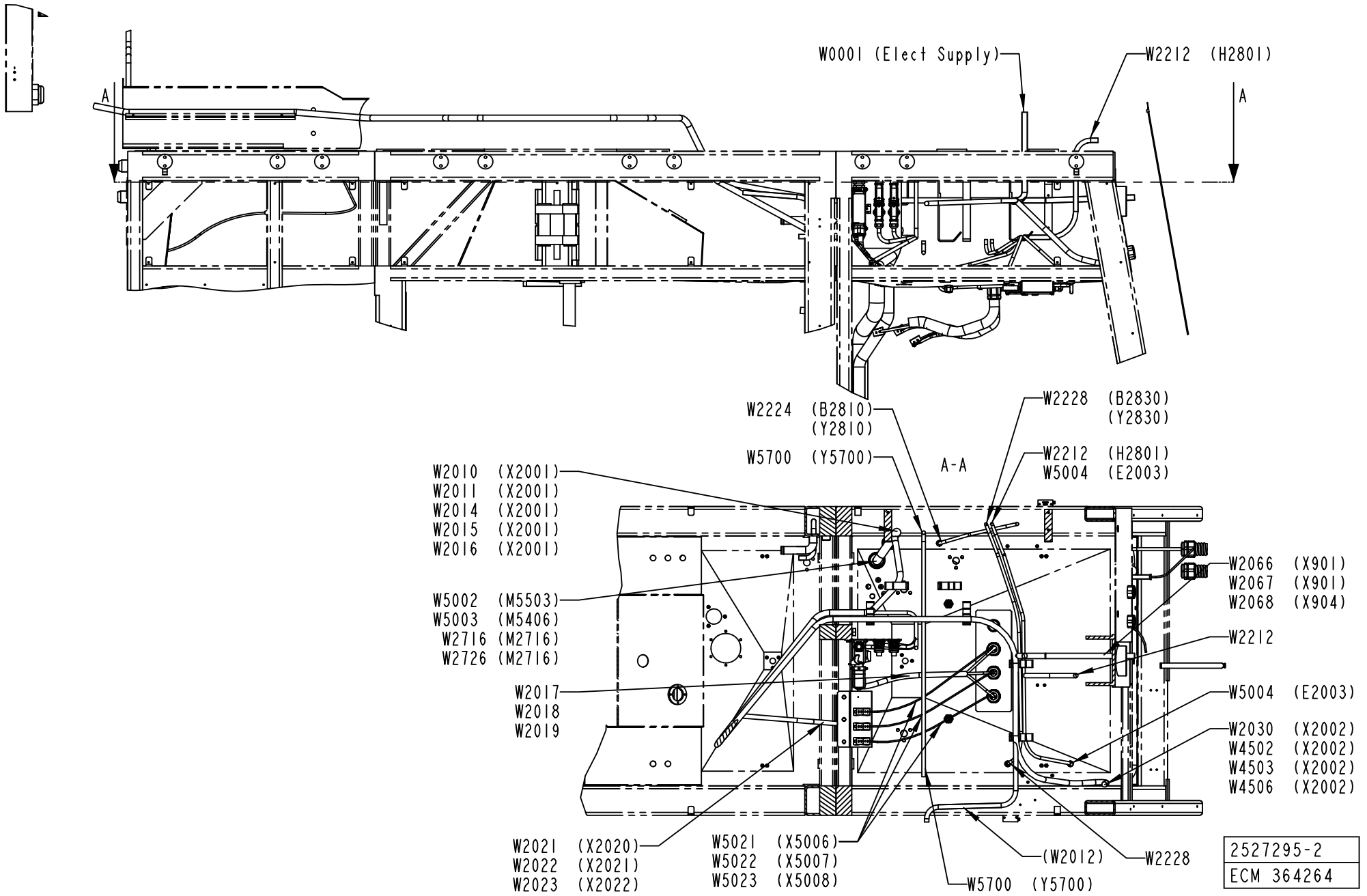
W0001 (Elect Supply)
W2212 (H2801)
A
A
W2224 (B2810)
(Y2810)
W2228 (B2830)
(Y2830)
W5700 (Y5700)
A-A
W2212 (H2801)
W5004 (E2003)
W2010 (X2001)
W2011 (X2001)
W2014 (X2001)
W2015 (X2001)
W2016 (X2001)
W5002 (M5503)
W5003 (M5406)
W2716 (M2716)
W2726 (M2716)
W2017
W2018
W2019
W2066 (X901)
W2067 (X901)
W2068 (X904)
W2212
W5004 (E2003)
W2030 (X2002)
W4502 (X2002)
W4503 (X2002)
W4506 (X2002)
W2021 (X2020)
W2022 (X2021)
W2023 (X2022)
W5021 (X5006)
W5022 (X5007)
W5023 (X5008)
(W2012)
W2228
W5700 (Y5700)
2527295-2
ECM 364264

ECM: 370543 - 20090101
Group number: 2527295-0150
Assembly Drawing: 2527295-2_2_AD

This list covers pages from 2-188 to 2-193

Pos	Part No	UN	Qty	Description	Page No
Common Parts (Cont'd)					
W2228	351150-0406	MM	2500	CABLE OLFLEX 7X0,75 MM2 LIGHT/GREY	
W2716	90459-7175		1	MOTOR POWER CABLE 2090-XXNPMF-10S15/A	
W2726	90459-7176		1	MOTOR FEEDBACK CABLE 2090-XXNFMF-S15	
W4005	351150-0414	MM	6500	CABLE OLFLEX 5X1,5 MM2 LIGHT/GREY	
W4006	351150-0417	MM	6500	CABLE OLFLEX 3X2,5 MM2 LIGHT/GREY	
W4502	2570004-0001		1	CABLE	
W4503	2570004-0001		1	CABLE	
W4505	90459-1812		1	CABLE, ETHERNET RJ 45 CONNECT. 8 M	
W4506	351150-0425	MM	7500	CABLE OLFLEX 25X0,75 MM2 LIGHT/GREY	
W4507	90459-1812		1	CABLE, ETHERNET RJ 45 CONNECT. 8 M	
W5002	351150-0413	MM	5000	CABLE OLFLEX 4GX1,5 MM2 LIGHT/GREY	
W5003	90220-0104	MM	7500	SCR. CABLE 4X1,5MM2	
W5004	351150-0412	MM	2500	CABLE OLFLEX 3X1,5 MM2 LIGHT/GREY	
W5021	90220-0034	M	2	THERMOCABLE TEX/SITW-20F-KX 2X0,5MM2	
W5022	90220-0034	M	2	THERMOCABLE TEX/SITW-20F-KX 2X0,5MM2	
W5023	90220-0034	M	2	THERMOCABLE TEX/SITW-20F-KX 2X0,5MM2	

Pos	Part No	UN	Qty	Description	Page No

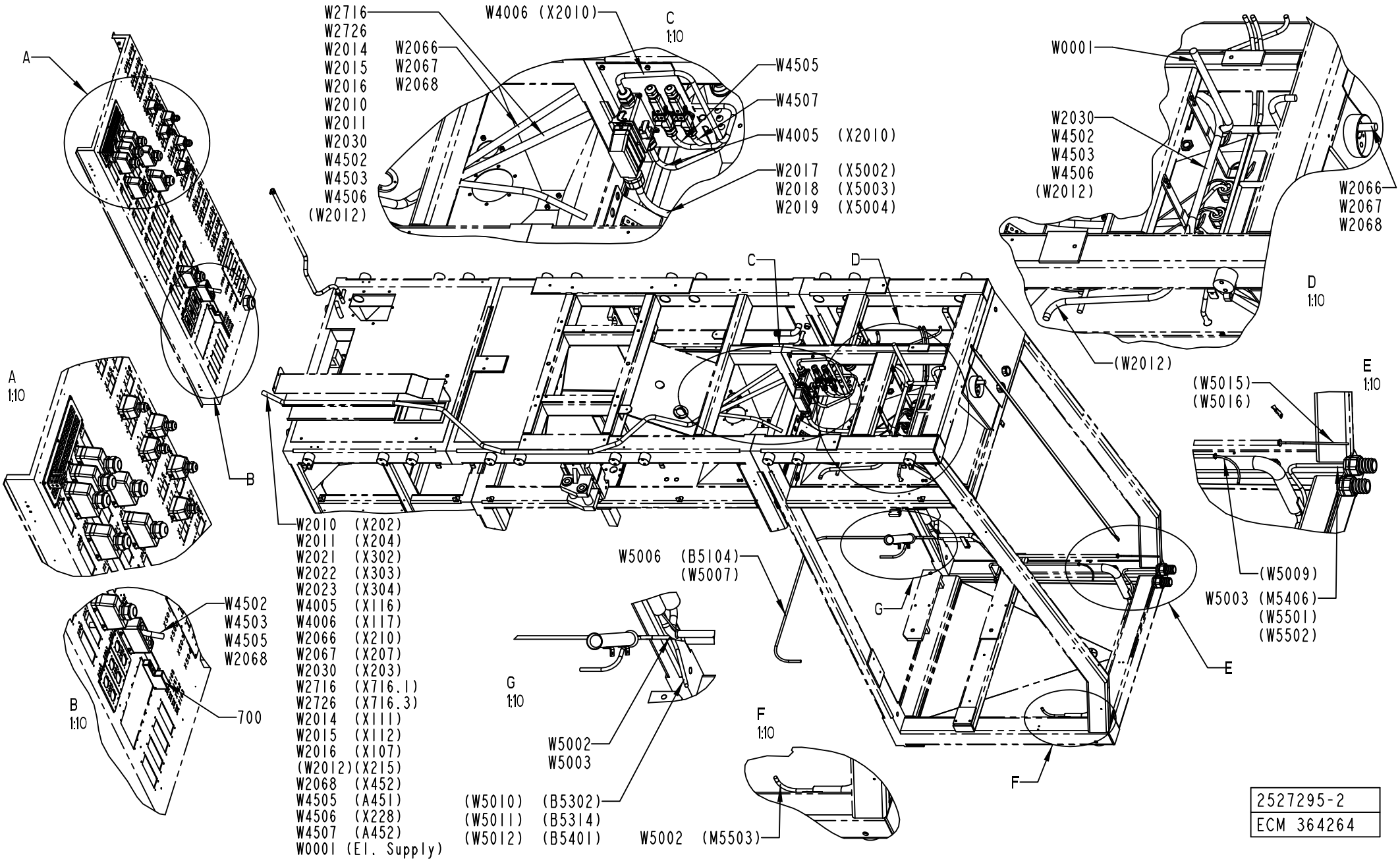
W2716
W2726
W2014
W2015
W2016
W2010
W2011
W2030
W4502
W4503
W4506
(W2012)
W2066
W2067
W2068
W4006 (X2010)
C
1:10
W4505
W4507
W4005 (X2010)
W2017 (X5002)
W2018 (X5003)
W2019 (X5004)
W0001
W2030
W4502
W4503
W4506
(W2012)
W2066
W2067
W2068
D
1:10
(W2012)
A
1:10
B
1:10
W4502
W4503
W4505
W2068
700
W2010 (X202)
W2011 (X204)
W2021 (X302)
W2022 (X303)
W2023 (X304)
W4005 (X116)
W4006 (X117)
W2066 (X210)
W2067 (X207)
W2030 (X203)
W2716 (X716.1)
W2726 (X716.3)
W2014 (X111)
W2015 (X112)
W2016 (X107)
(W2012)(X215)
W2068 (X452)
W4505 (A451)
W4506 (X228)
W4507 (A452)
W0001 (El. Supply)
W5006 (B5104)
(W5007)
G
1:10
W5002
W5003
(W5010) (B5302)
(W5011) (B5314)
(W5012) (B5401)
F
1:10
W5002 (M5503)
E
1:10
(W5015)
(W5016)
(W5009)
W5003 (M5406)
(W5501)
(W5502)
2527295-2
ECM 364264

Pos	Part No	UN	Qty	Description	Page No
SEE PREVIOUS LISTS PAGES: 2-189, 2-191.					

Pos	Part No	UN	Qty	Description	Page No

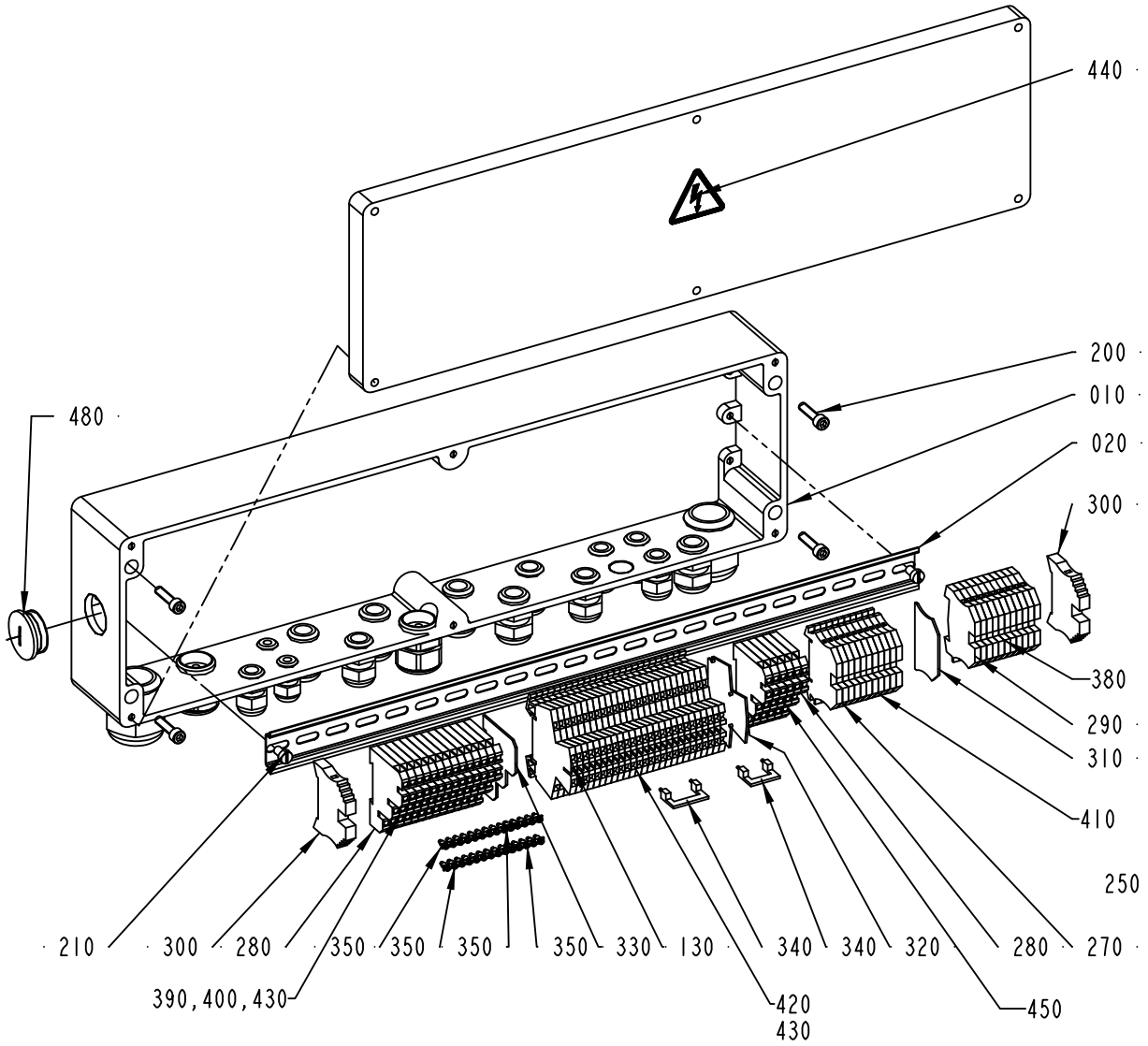

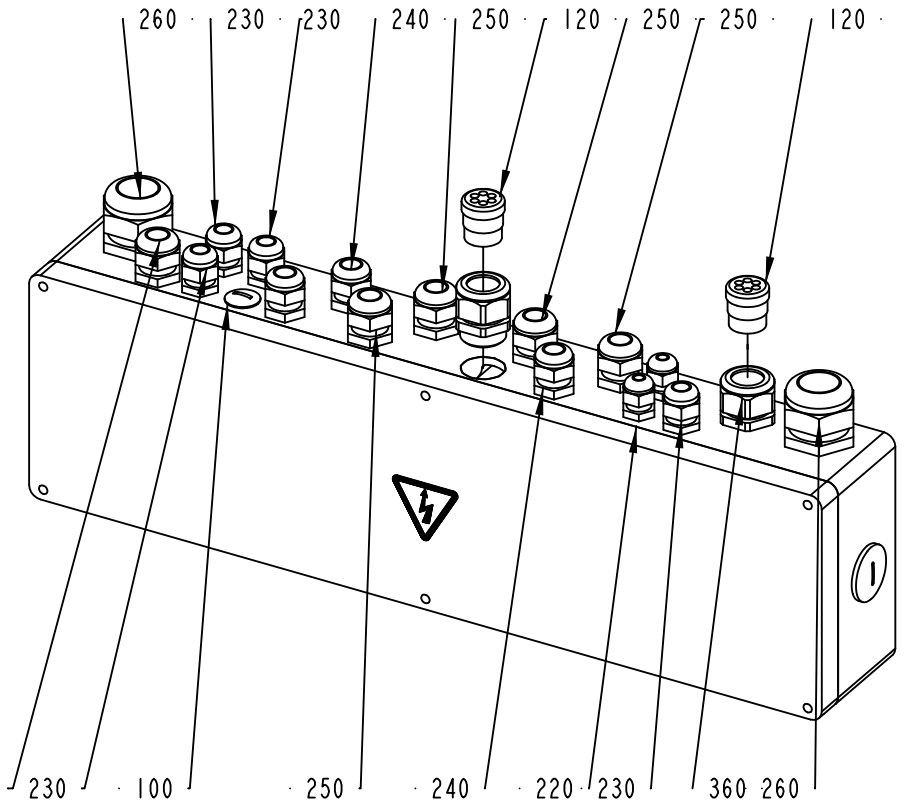

2527297-1
313511

ECM: 356342 - 20080403
Group number: 2527297-0100
Assembly Drawing: 2527297-1_1_AF

This list covers pages from 2-194 to 2-197

Pos	Part No	UN	Qty	Description	Page No
A3/FLEX DIMC/FLEX LIGHTCAP (See drawing on page: 2-196)					
230	352103-0106		4	CABLE GLAND, ST 11, PR18,6/PG11	
270	353021-0212		11	FEED THROUGH TERMINAL, 10200.0	
280	353021-0301		20	TERMINALS,TRIPLE-LEVEL, DLI 2,5/35 PA	
450	353243-0002		2	HOSE GLAND W/O INSERT PG11 EXTENDED	
460	90152-0059	M	1	SPIRAL CONDUIT, 18X12, UL 1211	
470	353249-0036		2	INSERT, MULTI HOLE, EK152 M 2X4	
480	90458-1310		1	BLIND PLUG CIRCULAR, M32X1,5 514GFK/232	
A3/FLEX PT/FLEX, A3/FLEX NODIMC NOPT, A3/FLEX DIMC/FLEX STDA7 CAP (See drawing on page: 2-194)					
100	90002-0009		1	BLANK-OFF PLUG, PR 18.6 SKINDICHT-BLK11	
230	352103-0106		4	CABLE GLAND, ST 11, PR18,6/PG11	
270	353021-0212		11	FEED THROUGH TERMINAL, 10200.0	
280	353021-0301		20	TERMINALS,TRIPLE-LEVEL, DLI 2,5/35 PA	
480	90458-1310		1	BLIND PLUG CIRCULAR, M32X1,5 514GFK/232	
Common Parts					
010	2537113-0000		1	CONNECTION BOX	
020	1129504-0000		1	MOUNTING RAIL	
120	90012-0125		2	GLAND FITTING	
130	90077-0113		26	FEED THROUGH TERMINAL, 10-00102150-1	
200	312115-0372		4	SCREW ISO4762 M6X25 A4 80	
210	312121-0364		2	SCREW ISO 1207 M6X10 4.8-5.8 Z.PL.	
220	352103-0100		2	CABLE GLAND, STR 9, PR15,2/PG9	
240	352103-0108		3	CABLE GLAND, ST 13,5 , PR20,4/PG13,5	
250	352103-0110		5	CABLE GLAND, STR 16, PR22,5/PG16	
260	352103-0121		2	CABLE GLAND, ST 29, PR37,0/PG29	
290	353024-0204		11	EARTH TERMINAL WPE 2,5	
300	353031-0203		2	END SUPPORT, WEW 35/2	
310	353032-0004		1	END PLATE WAP 2,5-10 BEIGE	
320	353032-0009		1	END PLATE, WAP FOR WDK	
330	353032-0301		1	END PLATE WAP, 13132.6	
340	353034-0030		2	BRIDGE CONNECTOR WQV 2,5/10, 10544.6	
350	353034-0404		4	BRIDGE CONNECTOR Q10, 13131.0	
360	353240-0005		2	GLAND W/O INSERT PG21 NORMAL	
380	359011-0834		1	SET OF SIGNS 6-GW(EARTH)	
390	359011-0817		1	SYMBOL 5-GW (+) 50PC	
400	359011-0818		1	SYMBOL 5-GW (-) 50PC	
410	359011-0821		2	SET OF SIGNS 6-FW 1-50	
420	359011-0824		2	SET OF SIGNS 6-FW 151-200	
430	359011-0823		2	SET OF SIGNS 6-FW 101-150	
440	359705-0015		1	WARNING SIGN ISO, RISK OF ELECTRIC SHOCK	
450	359011-0810		1	MARKING PLATES 5-FW 151-200	

Pos	Part No	UN	Qty	Description	Page No

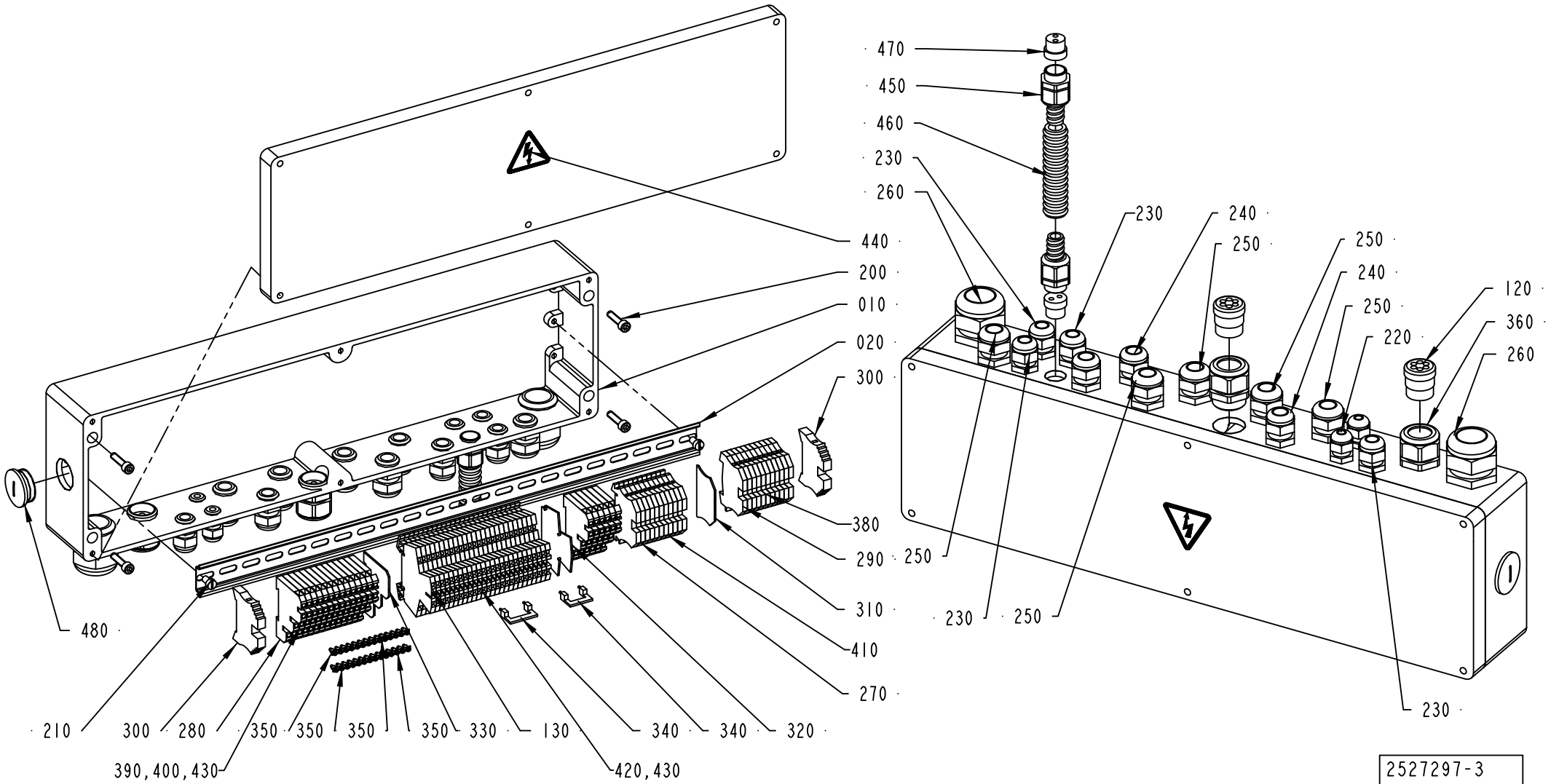

2527297-3
313511

ECM: 356342 - 20080403
Group number: 2527297-0100
Assembly Drawing: 2527297-3_1_AC

This list covers pages from 2-194 to 2-197

Pos	Part No	UN	Qty	Description	Page No
A3/FLEX DIMC/FLEX LIGHTCAP (See drawing on page: 2-196)					
230	352103-0106		4	CABLE GLAND, ST 11, PR18,6/PG11	
270	353021-0212		11	FEED THROUGH TERMINAL, 10200.0	
280	353021-0301		20	TERMINALS,TRIPLE-LEVEL, DLI 2,5/35 PA	
450	353243-0002		2	HOSE GLAND W/O INSERT PG11 EXTENDED	
460	90152-0059	M	1	SPIRAL CONDUIT, 18X12, UL 1211	
470	353249-0036		2	INSERT, MULTI HOLE, EK152 M 2X4	
480	90458-1310		1	BLIND PLUG CIRCULAR, M32X1,5 514GFK/232	
A3/FLEX PT/FLEX, A3/FLEX NODIMC NOPT, A3/FLEX DIMC/FLEX STDA7 CAP (See drawing on page: 2-194)					
100	90002-0009		1	BLANK-OFF PLUG, PR 18.6 SKINDICHT-BLK11	
230	352103-0106		4	CABLE GLAND, ST 11, PR18,6/PG11	
270	353021-0212		11	FEED THROUGH TERMINAL, 10200.0	
280	353021-0301		20	TERMINALS,TRIPLE-LEVEL, DLI 2,5/35 PA	
480	90458-1310		1	BLIND PLUG CIRCULAR, M32X1,5 514GFK/232	
Common Parts					
010	2537113-0000		1	CONNECTION BOX	
020	1129504-0000		1	MOUNTING RAIL	
120	90012-0125		2	GLAND FITTING	
130	90077-0113		26	FEED THROUGH TERMINAL, 10-00102150-1	
200	312115-0372		4	SCREW ISO4762 M6X25 A4 80	
210	312121-0364		2	SCREW ISO 1207 M6X10 4.8-5.8 Z.PL.	
220	352103-0100		2	CABLE GLAND, STR 9, PR15,2/PG9	
240	352103-0108		3	CABLE GLAND, ST 13,5 , PR20,4/PG13,5	
250	352103-0110		5	CABLE GLAND, STR 16, PR22,5/PG16	
260	352103-0121		2	CABLE GLAND, ST 29, PR37,0/PG29	
290	353024-0204		11	EARTH TERMINAL WPE 2,5	
300	353031-0203		2	END SUPPORT, WEW 35/2	
310	353032-0004		1	END PLATE WAP 2,5-10 BEIGE	
320	353032-0009		1	END PLATE, WAP FOR WDK	
330	353032-0301		1	END PLATE WAP, 13132.6	
340	353034-0030		2	BRIDGE CONNECTOR WQV 2,5/10, 10544.6	
350	353034-0404		4	BRIDGE CONNECTOR Q10, 13131.0	
360	353240-0005		2	GLAND W/O INSERT PG21 NORMAL	
380	359011-0834		1	SET OF SIGNS 6-GW(EARTH)	
390	359011-0817		1	SYMBOL 5-GW (+) 50PC	
400	359011-0818		1	SYMBOL 5-GW (-) 50PC	
410	359011-0821		2	SET OF SIGNS 6-FW 1-50	
420	359011-0824		2	SET OF SIGNS 6-FW 151-200	
430	359011-0823		2	SET OF SIGNS 6-FW 101-150	
440	359705-0015		1	WARNING SIGN ISO, RISK OF ELECTRIC SHOCK	
450	359011-0810		1	MARKING PLATES 5-FW 151-200	

Pos	Part No	UN	Qty	Description	Page No

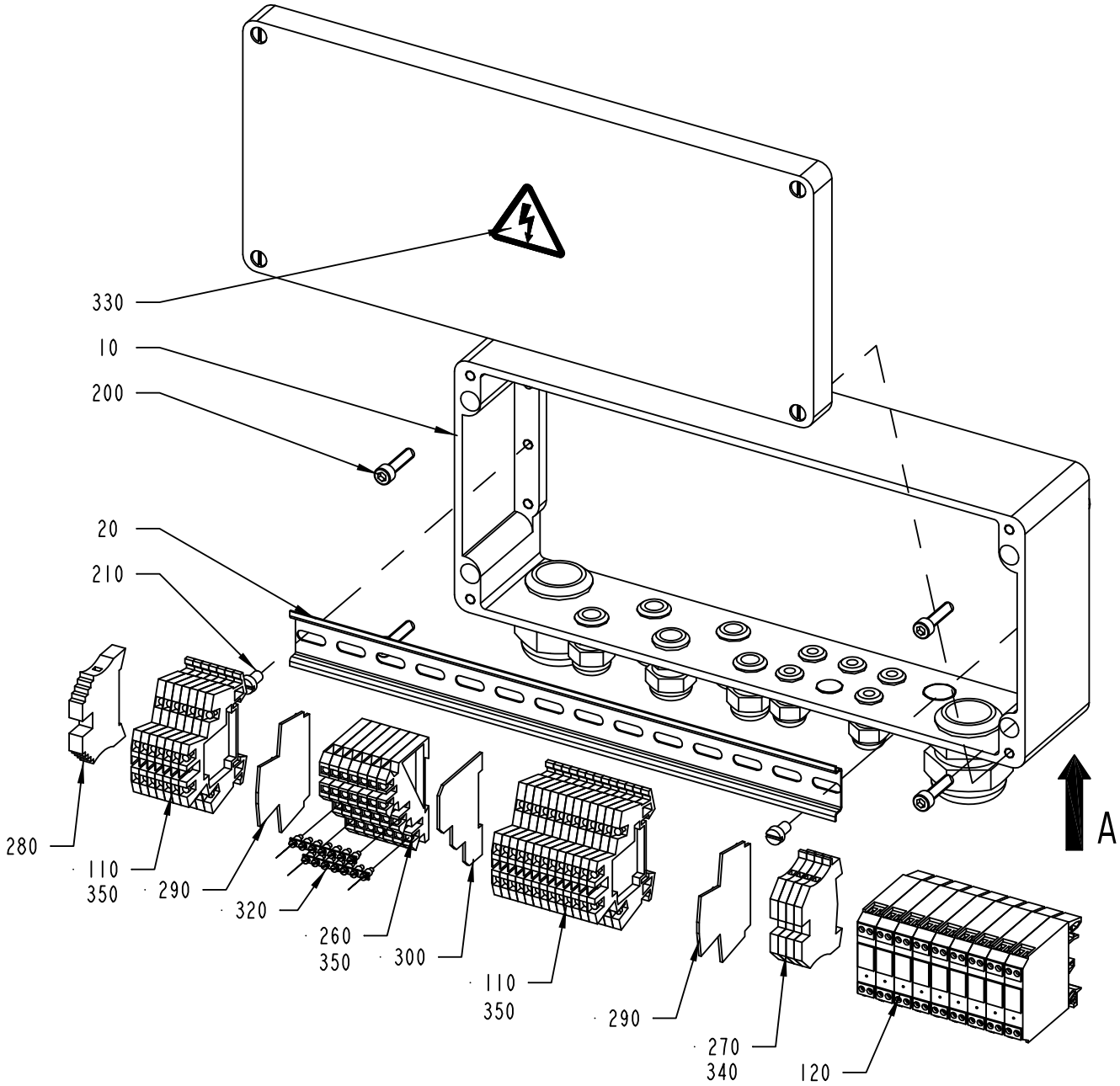

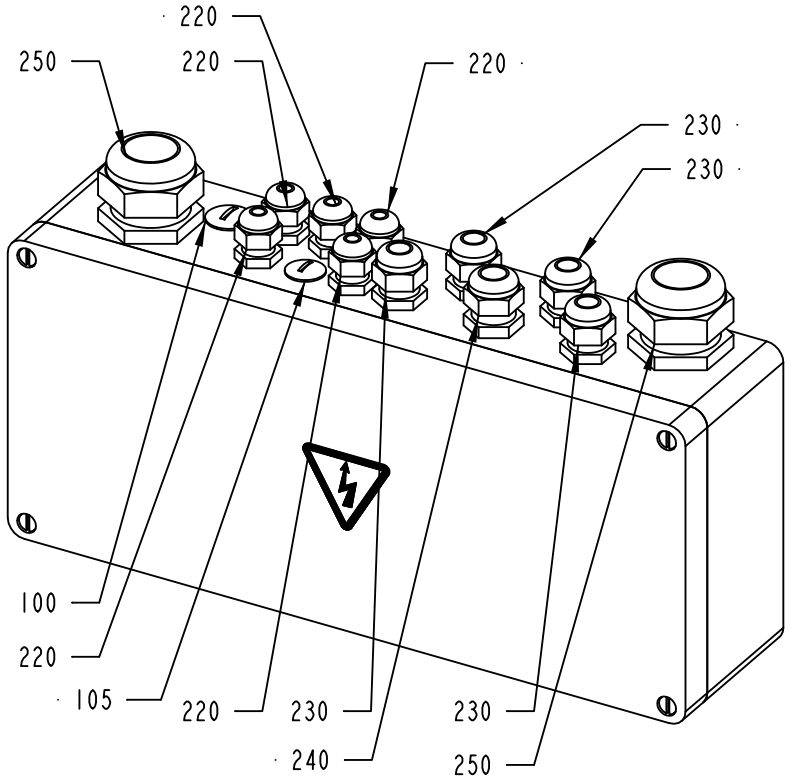

VIEW FROM A

2527299-1
345473

ECM: 356343 - 20080403
Group number: 2527299-0100
Assembly Drawing: 2527299-1_1_AD

Pos	Part No	UN	Qty	Description	Page No
A3/FLEX					
120	90119-0063		9	OPTO-RELAY, DC/DC AMMS-10-1/30VDC	
Common Parts					
010	2537114-0000		1	CONNECTION BOX	
020	2546496-0000		1	RAIL	
100	90002-0009		1	BLANK-OFF PLUG, PR 18.6 SKINDICHT-BLK11	
105	90002-0013		1	BLANK-OFF PLUG, PR 15,2 SKINDICHT-BLK9	
110	90077-0113		20	FEED THROUGH TERMINAL, 10-00102150-1	
130	90459-1617		1	TERMINAL BOX FL CAT5	
200	312115-0372		4	SCREW ISO4762 M6X25 A4 80	
210	312121-0364		2	SCREW ISO 1207 M6X10 4.8-5.8 Z.PL.	
220	352103-0100		5	CABLE GLAND, STR 9, PR15,2/PG9	
230	352103-0106		4	CABLE GLAND, ST 11, PR18,6/PG11	
240	352103-0108		1	CABLE GLAND, ST 13,5 , PR20,4/PG13,5	
250	352103-0121		2	CABLE GLAND, ST 29, PR37,0/PG29	
260	353021-0301		7	TERMINALS,TRIPLE-LEVEL, DLI 2,5/35 PA	
270	353024-0204		4	EARTH TERMINAL WPE 2,5	
280	353031-0203		1	END SUPPORT, WEW 35/2	
290	353032-0009		2	END PLATE, WAP FOR WDK	
300	353032-0301		1	END PLATE WAP, 13132.6	
310	353034-0030		1	BRIDGE CONNECTOR WQV 2,5/10, 10544.6	
320	353034-0404		2	BRIDGE CONNECTOR Q10, 13131.0	
330	359705-0015		1	WARNING SIGN ISO, RISK OF ELECTRIC SHOCK	
340	359011-0834		1	SET OF SIGNS 6-GW(EARTH)	
350	359011-0823		2	SET OF SIGNS 6-FW 101-150	

Pos	Part No	UN	Qty	Description	Page No

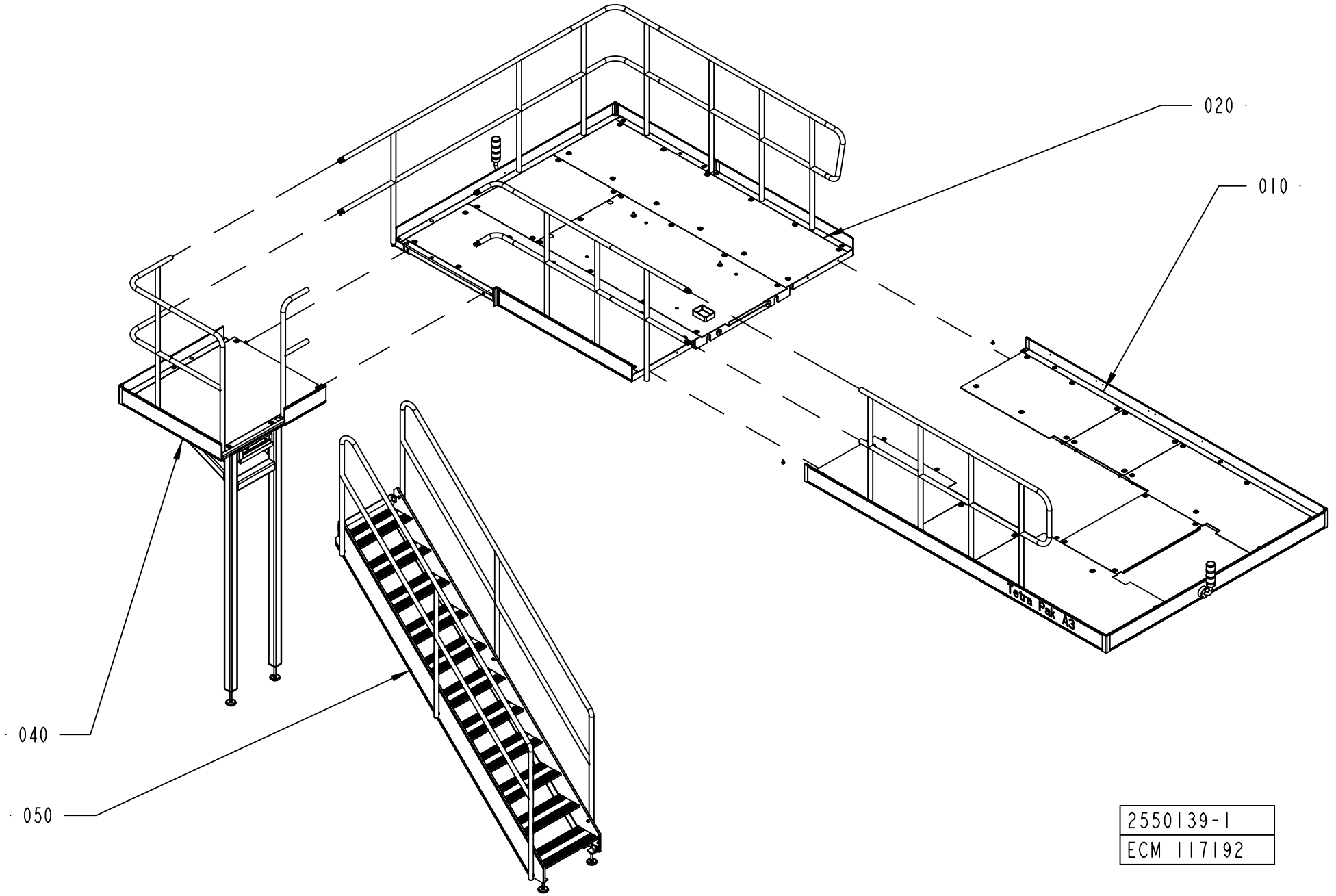
020
010
040
050
Tetra Pak A3
2550139-1
ECM 117192

ECM: 266298 - 20060702
Group number: 2550139-0100
Assembly Drawing: 2550139-1_1_AA

This list covers pages from 2-200 to 2-211

Pos	Part No	UN	Qty	Description	Page No
A3/FLEX DIMC/FLEX LEFTSTAIR (See drawing on page: 2-204)					
020	1528847-0100		1	PLATFORM	**2-213**
030	1528848-0100		1	PLATFORM	**2-215, 2-217**
A3/FLEX DIMC/FLEX RIGHTSTAIR (See drawing on page: 2-210)					
020	1528847-0100		1	PLATFORM	**2-213**
030	1528848-0100		1	PLATFORM	**2-215, 2-217**
A3/FLEX NOPT LEFTSTAIR, A3/FLEX NODIMC LEFTSTAIR (See drawing on page: 2-200)					
020	2550138-0100		1	PLATFORM	**2-221, 2-223, 2-225, 2-227**
A3/FLEX NOPT RIGHTSTAIR, A3/FLEX NODIMC RIGHTSTAIR (See drawing on page: 2-206)					
020	2550138-0100		1	PLATFORM	**2-221, 2-223, 2-225, 2-227**
A3/FLEX PT/FLEX LEFTSTAIR (See drawing on page: 2-202)					
020	2550138-0100		1	PLATFORM	**2-221, 2-223, 2-225, 2-227**
A3/FLEX PT/FLEX RIGHTSTAIR (See drawing on page: 2-208)					
020	2550138-0100		1	PLATFORM	**2-221, 2-223, 2-225, 2-227**
Common Parts					
010	2508369-0200		1	PLATFORM	**2-229**
040	2564546-0100		1	PLATFORM	**2-231, 2-233**
050	1523777-0100		1	STAIR CASE	**2-235**

Pos	Part No	UN	Qty	Description	Page No

Machine Type | Group Description | Used-In | Group Number | Page No

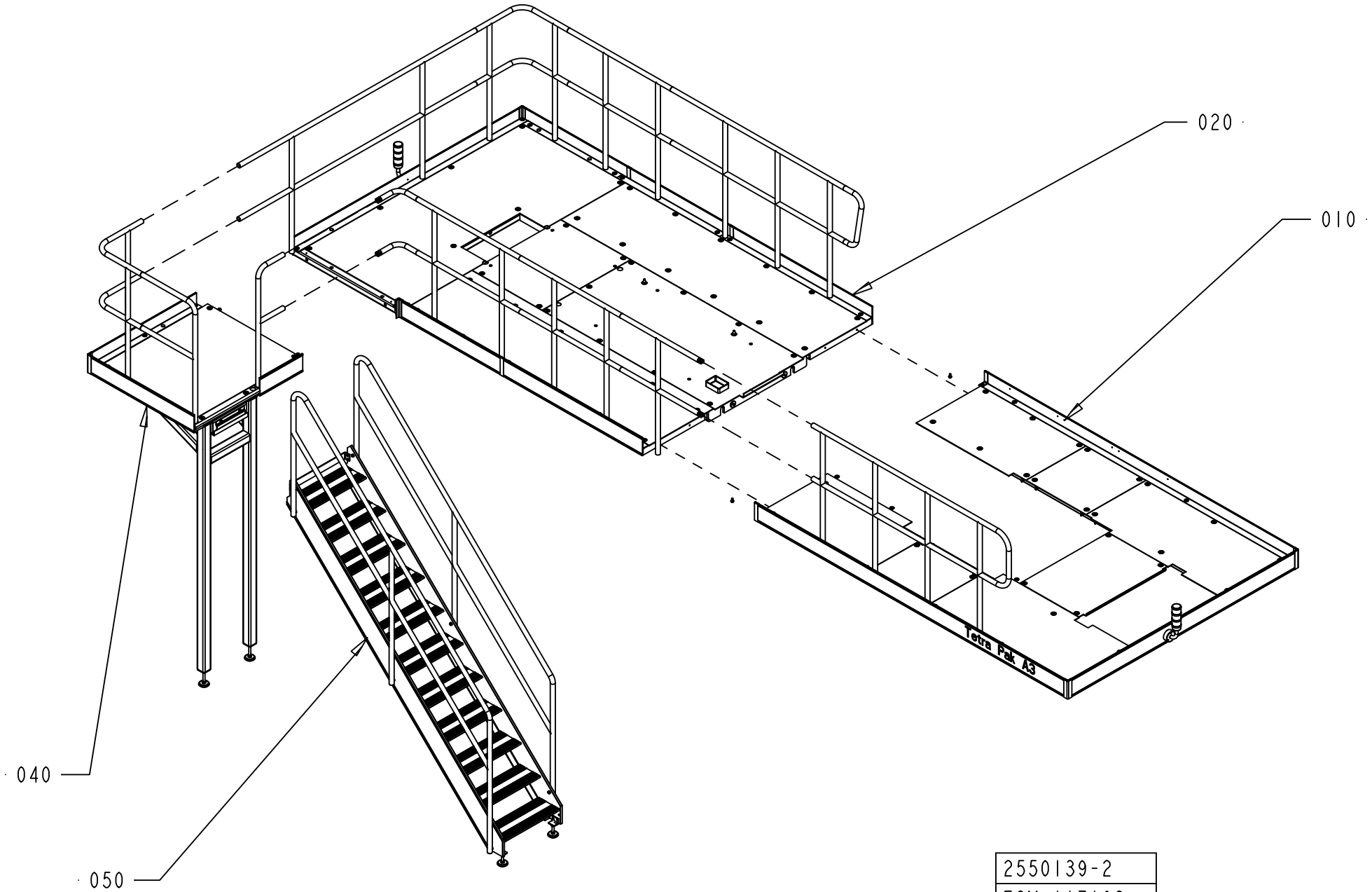

2550139-2
ECM 117192

ECM: 266298 - 20060702
Group number: 2550139-0100
Assembly Drawing: 2550139-2_1_AA

This list covers pages from 2-200 to 2-211

Pos	Part No	UN	Qty	Description	Page No
A3/FLEX DIMC/FLEX LEFTSTAIR (See drawing on page: 2-204)					
020	1528847-0100		1	PLATFORM	**2-213**
030	1528848-0100		1	PLATFORM	**2-215, 2-217**
A3/FLEX DIMC/FLEX RIGHTSTAIR (See drawing on page: 2-210)					
020	1528847-0100		1	PLATFORM	**2-213**
030	1528848-0100		1	PLATFORM	**2-215, 2-217**
A3/FLEX NOPT LEFTSTAIR, A3/FLEX NODIMC LEFTSTAIR (See drawing on page: 2-200)					
020	2550138-0100		1	PLATFORM	**2-221, 2-223, 2-225, 2-227**
A3/FLEX NOPT RIGHTSTAIR, A3/FLEX NODIMC RIGHTSTAIR (See drawing on page: 2-206)					
020	2550138-0100		1	PLATFORM	**2-221, 2-223, 2-225, 2-227**
A3/FLEX PT/FLEX LEFTSTAIR (See drawing on page: 2-202)					
020	2550138-0100		1	PLATFORM	**2-221, 2-223, 2-225, 2-227**
A3/FLEX PT/FLEX RIGHTSTAIR (See drawing on page: 2-208)					
020	2550138-0100		1	PLATFORM	**2-221, 2-223, 2-225, 2-227**
Common Parts					
010	2508369-0200		1	PLATFORM	**2-229**
040	2564546-0100		1	PLATFORM	**2-231, 2-233**
050	1523777-0100		1	STAIR CASE	**2-235**

Pos	Part No	UN	Qty	Description	Page No

Machine Type | Group Description | Used-In | Group Number | Page No

PLATFORM

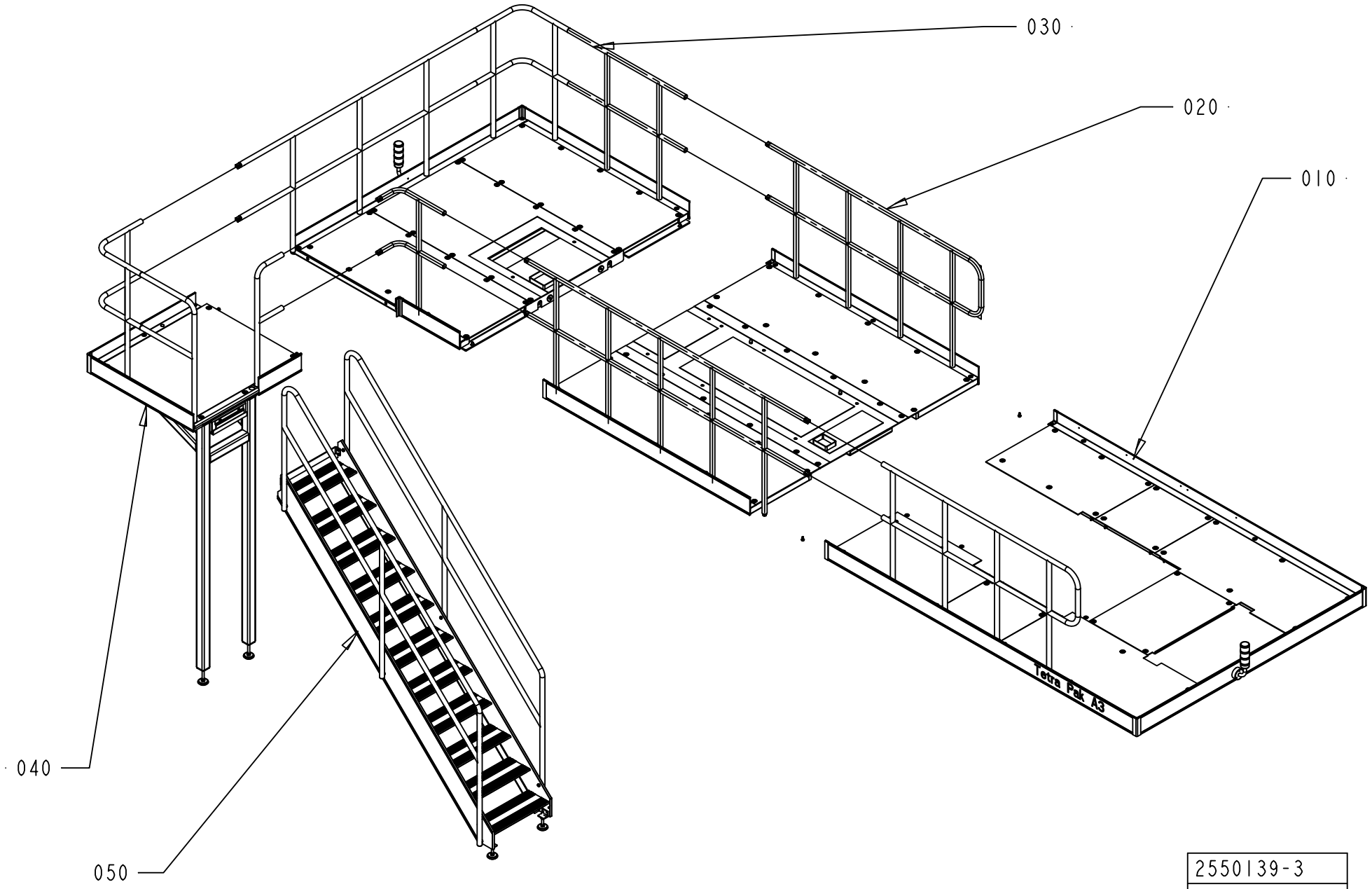

2550139-3
ECM 117192

ECM: 266298 - 20060702
Group number: 2550139-0100
Assembly Drawing: 2550139-3_1_AA

This list covers pages from 2-200 to 2-211

Pos	Part No	UN	Qty	Description	Page No
A3/FLEX DIMC/FLEX LEFTSTAIR (See drawing on page: 2-204)					
020	1528847-0100		1	PLATFORM	**2-213**
030	1528848-0100		1	PLATFORM	**2-215, 2-217**
A3/FLEX DIMC/FLEX RIGHTSTAIR (See drawing on page: 2-210)					
020	1528847-0100		1	PLATFORM	**2-213**
030	1528848-0100		1	PLATFORM	**2-215, 2-217**
A3/FLEX NOPT LEFTSTAIR, A3/FLEX NODIMC LEFTSTAIR (See drawing on page: 2-200)					
020	2550138-0100		1	PLATFORM	**2-221, 2-223, 2-225, 2-227**
A3/FLEX NOPT RIGHTSTAIR, A3/FLEX NODIMC RIGHTSTAIR (See drawing on page: 2-206)					
020	2550138-0100		1	PLATFORM	**2-221, 2-223, 2-225, 2-227**
A3/FLEX PT/FLEX LEFTSTAIR (See drawing on page: 2-202)					
020	2550138-0100		1	PLATFORM	**2-221, 2-223, 2-225, 2-227**
A3/FLEX PT/FLEX RIGHTSTAIR (See drawing on page: 2-208)					
020	2550138-0100		1	PLATFORM	**2-221, 2-223, 2-225, 2-227**
Common Parts					
010	2508369-0200		1	PLATFORM	**2-229**
040	2564546-0100		1	PLATFORM	**2-231, 2-233**
050	1523777-0100		1	STAIR CASE	**2-235**

Pos	Part No	UN	Qty	Description	Page No

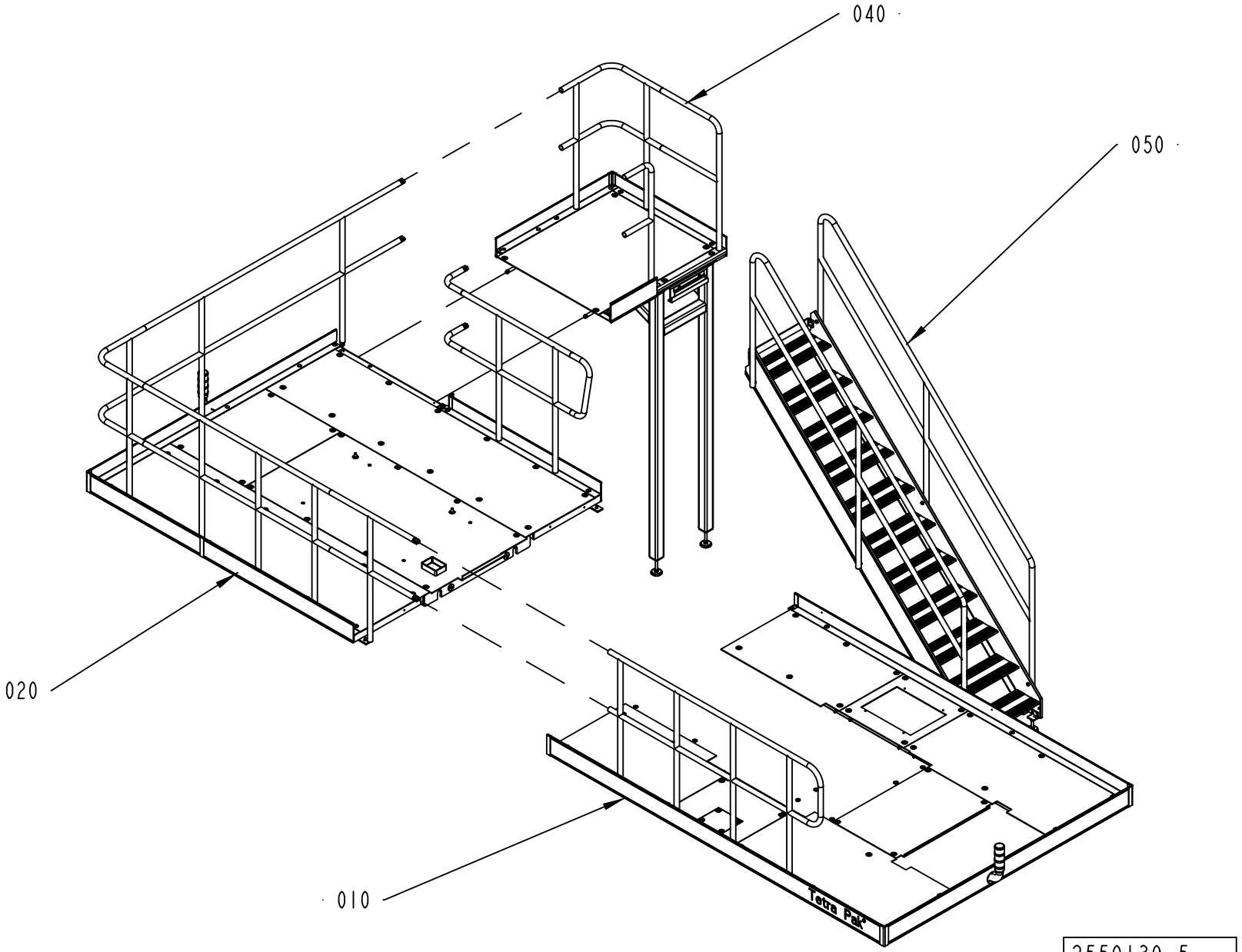

2550139-5
ECM 139753

ECM: 266298 - 20060702
Group number: 2550139-0100
Assembly Drawing: 2550139-5_1_AA

This list covers pages from 2-200 to 2-211

Pos	Part No	UN	Qty	Description	Page No
A3/FLEX DIMC/FLEX LEFTSTAIR (See drawing on page: 2-204)					
020	1528847-0100		1	PLATFORM	**2-213**
030	1528848-0100		1	PLATFORM	**2-215, 2-217**
A3/FLEX DIMC/FLEX RIGHTSTAIR (See drawing on page: 2-210)					
020	1528847-0100		1	PLATFORM	**2-213**
030	1528848-0100		1	PLATFORM	**2-215, 2-217**
A3/FLEX NOPT LEFTSTAIR, A3/FLEX NODIMC LEFTSTAIR (See drawing on page: 2-200)					
020	2550138-0100		1	PLATFORM	**2-221, 2-223, 2-225, 2-227**
A3/FLEX NOPT RIGHTSTAIR, A3/FLEX NODIMC RIGHTSTAIR (See drawing on page: 2-206)					
020	2550138-0100		1	PLATFORM	**2-221, 2-223, 2-225, 2-227**
A3/FLEX PT/FLEX LEFTSTAIR (See drawing on page: 2-202)					
020	2550138-0100		1	PLATFORM	**2-221, 2-223, 2-225, 2-227**
A3/FLEX PT/FLEX RIGHTSTAIR (See drawing on page: 2-208)					
020	2550138-0100		1	PLATFORM	**2-221, 2-223, 2-225, 2-227**
Common Parts					
010	2508369-0200		1	PLATFORM	**2-229**
040	2564546-0100		1	PLATFORM	**2-231, 2-233**
050	1523777-0100		1	STAIR CASE	**2-235**

Pos	Part No	UN	Qty	Description	Page No

Machine Type | Group Description | Used-In | Group Number | Page No

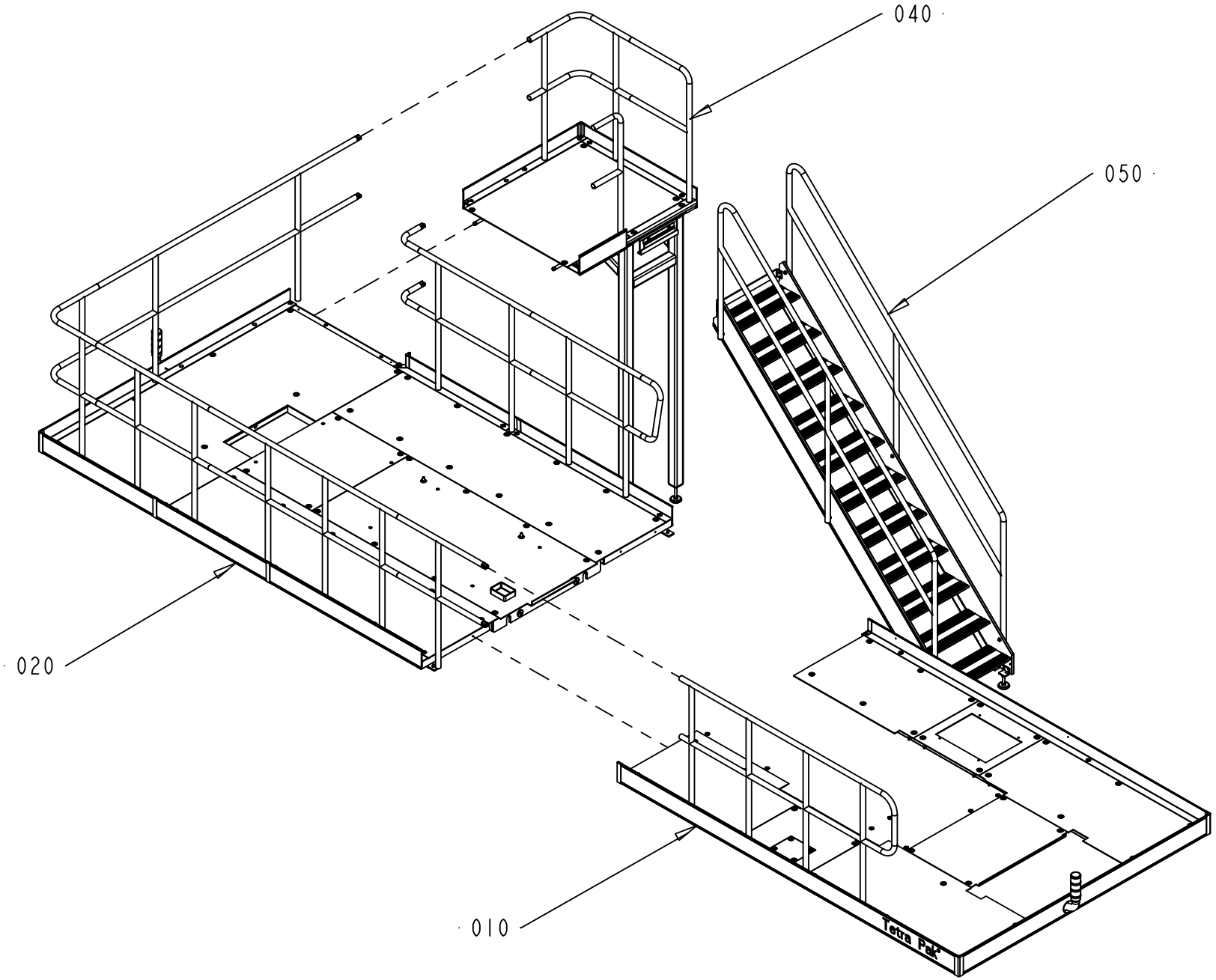

2550139-6
ECM 139753

ECM: 266298 - 20060702
Group number: 2550139-0100
Assembly Drawing: 2550139-6_1_AA

This list covers pages from 2-200 to 2-211

Pos	Part No	UN	Qty	Description	Page No
A3/FLEX DIMC/FLEX LEFTSTAIR (See drawing on page: 2-204)					
020	1528847-0100		1	PLATFORM	**2-213**
030	1528848-0100		1	PLATFORM	**2-215, 2-217**
A3/FLEX DIMC/FLEX RIGHTSTAIR (See drawing on page: 2-210)					
020	1528847-0100		1	PLATFORM	**2-213**
030	1528848-0100		1	PLATFORM	**2-215, 2-217**
A3/FLEX NOPT LEFTSTAIR, A3/FLEX NODIMC LEFTSTAIR (See drawing on page: 2-200)					
020	2550138-0100		1	PLATFORM	**2-221, 2-223, 2-225, 2-227**
A3/FLEX NOPT RIGHTSTAIR, A3/FLEX NODIMC RIGHTSTAIR (See drawing on page: 2-206)					
020	2550138-0100		1	PLATFORM	**2-221, 2-223, 2-225, 2-227**
A3/FLEX PT/FLEX LEFTSTAIR (See drawing on page: 2-202)					
020	2550138-0100		1	PLATFORM	**2-221, 2-223, 2-225, 2-227**
A3/FLEX PT/FLEX RIGHTSTAIR (See drawing on page: 2-208)					
020	2550138-0100		1	PLATFORM	**2-221, 2-223, 2-225, 2-227**
Common Parts					
010	2508369-0200		1	PLATFORM	**2-229**
040	2564546-0100		1	PLATFORM	**2-231, 2-233**
050	1523777-0100		1	STAIR CASE	**2-235**

Pos	Part No	UN	Qty	Description	Page No

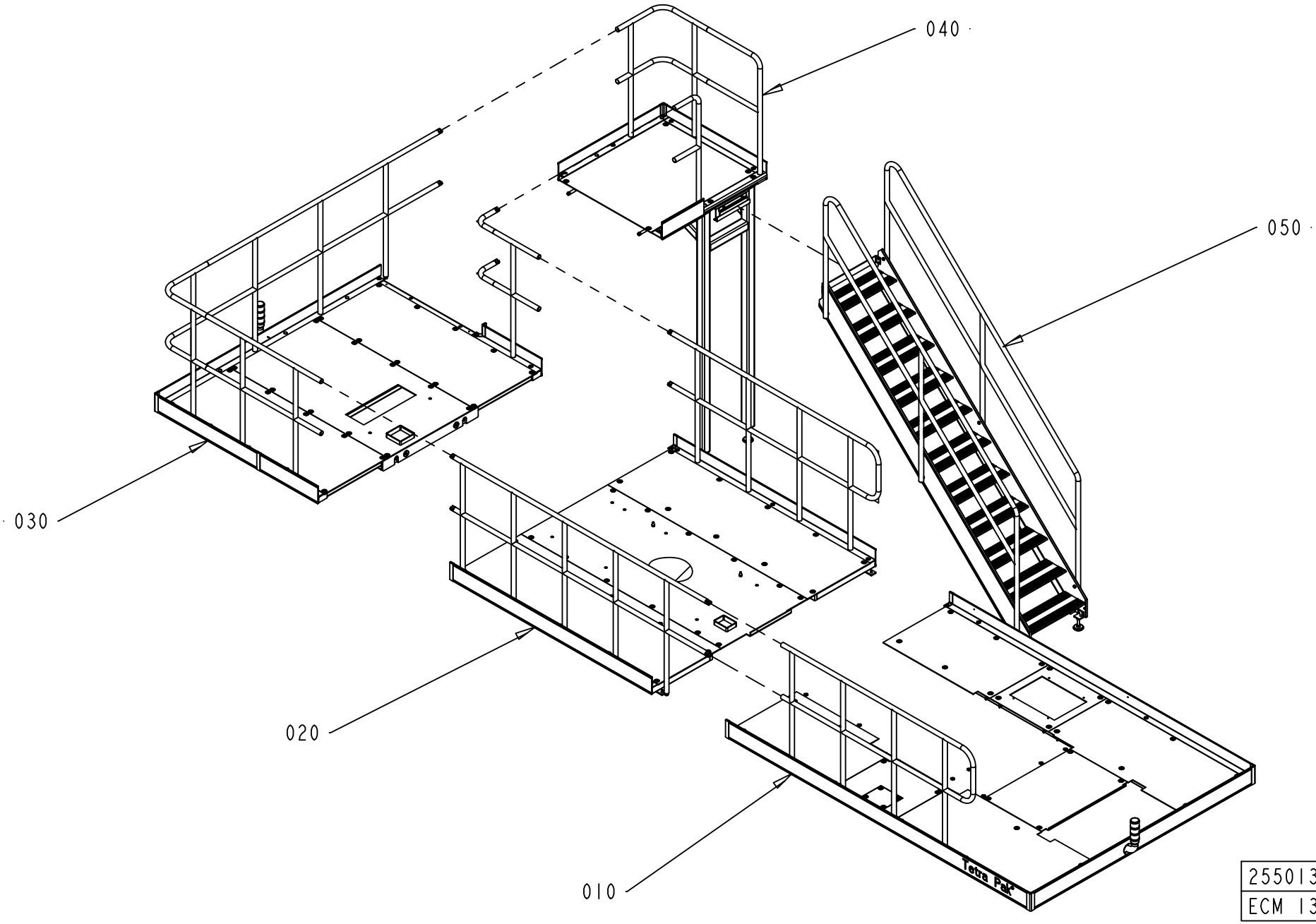

2550139-7
ECM 139753

ECM: 266298 - 20060702
Group number: 2550139-0100
Assembly Drawing: 2550139-7_1_AA

This list covers pages from 2-200 to 2-211

Pos	Part No	UN	Qty	Description	Page No
A3/FLEX DIMC/FLEX LEFTSTAIR (See drawing on page: 2-204)					
020	1528847-0100		1	PLATFORM	**2-213**
030	1528848-0100		1	PLATFORM	**2-215, 2-217**
A3/FLEX DIMC/FLEX RIGHTSTAIR (See drawing on page: 2-210)					
020	1528847-0100		1	PLATFORM	**2-213**
030	1528848-0100		1	PLATFORM	**2-215, 2-217**
A3/FLEX NOPT LEFTSTAIR, A3/FLEX NODIMC LEFTSTAIR (See drawing on page: 2-200)					
020	2550138-0100		1	PLATFORM	**2-221, 2-223, 2-225, 2-227**
A3/FLEX NOPT RIGHTSTAIR, A3/FLEX NODIMC RIGHTSTAIR (See drawing on page: 2-206)					
020	2550138-0100		1	PLATFORM	**2-221, 2-223, 2-225, 2-227**
A3/FLEX PT/FLEX LEFTSTAIR (See drawing on page: 2-202)					
020	2550138-0100		1	PLATFORM	**2-221, 2-223, 2-225, 2-227**
A3/FLEX PT/FLEX RIGHTSTAIR (See drawing on page: 2-208)					
020	2550138-0100		1	PLATFORM	**2-221, 2-223, 2-225, 2-227**
Common Parts					
010	2508369-0200		1	PLATFORM	**2-229**
040	2564546-0100		1	PLATFORM	**2-231, 2-233**
050	1523777-0100		1	STAIR CASE	**2-235**

Pos	Part No	UN	Qty	Description	Page No

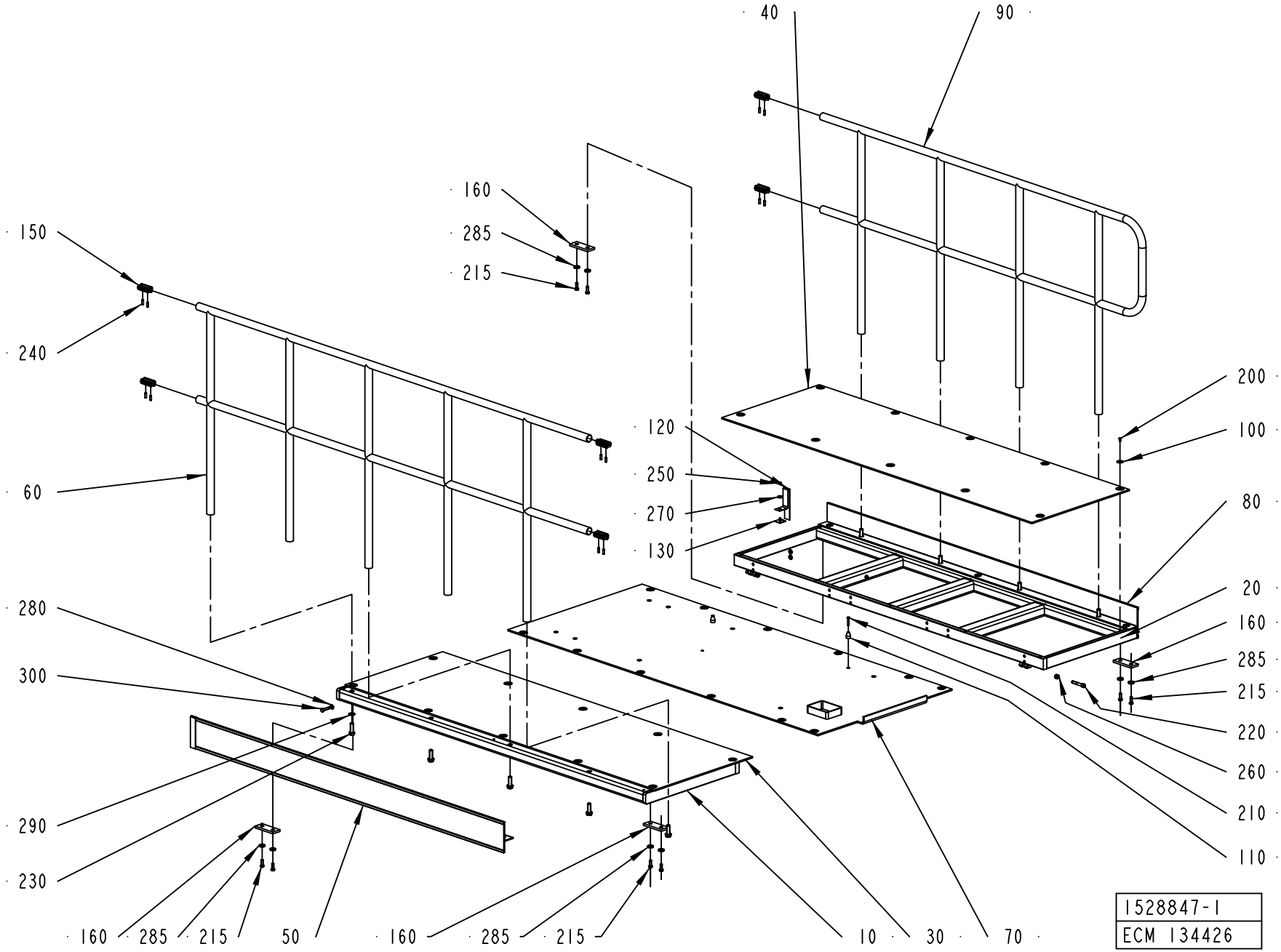
40
90
160
285
215
150
240
60
120
250
270
130
200
100
80
20
160
285
215
220
260
210
110
280
300
290
230
160
285
215
50
160
285
215
10
30
70
1528847-1
ECM 134426

ECM: 340455 - 20080403
Group number: 1528847-0100
Assembly Drawing: 1528847-1_1_AB

Pos	Part No	UN	Qty	Description	Page No
-					
010	1528552-0000		1	PLATFORM	
020	1528553-0000		1	PLATFORM	
030	1528850-0000		1	CHECKER PLATE	
040	1528855-0000		1	CHECKER PLATE	
050	1528856-0000		1	TOE PLATE	
060	1528858-0000		1	RAILING	
070	1528866-0000		1	CHECKER PLATE	
080	1528867-0000		1	TOE PLATE	
090	1528874-0000		1	RAILING	
100	90458-0073		38	WASHER 6,4/30, H=1,5	
110	1037571-0000		2	GUIDE BUSHING	
120	1254025-0000		2	STRIP	
130	1254028-0000		2	FASTENING PLATE	
150	985328-0000		6	CONNECTION	
160	2632578-0000		4	PLATE	
200	90458-0072		38	SCREW ISO 7380 S M6X12 A2	
210	312109-0378		2	SCREW M6S ISO 4017 M6X40 A480	
215	312105-0495		8	SCREW M6S ISO 4017 M10X30 A480	
220	312115-0546		4	SCREW ISO4762 M12X70 A4 80	
230	312111-0630		9	SCREW HEX.SOCK.HD.MC6S-TT 16X50 88 FZB	
240	312318-0453		12	SCREW ISO4029 M8X25 A4	
250	312605-0316		2	HEXAGON NUT, M6M M6 A280	
260	312812-0322		4	HEXAGON NUT, NY-LOCK M12 A480	
270	315125-0153		2	WASHER TBRSB 6,4X22X4 A4	
280	315105-0173		24	WASHER BRB 10,5X22 RFR	
285	315125-0173		8	WASHER TBRSB 10,5X28X6 A4	
290	315105-0186		9	WASHER BRB 17X30 RFR	
300	90458-2845		24	SCREW,HEXAGON HEAD M6S ISO 4017 M10X45	

Pos	Part No	UN	Qty	Description	Page No

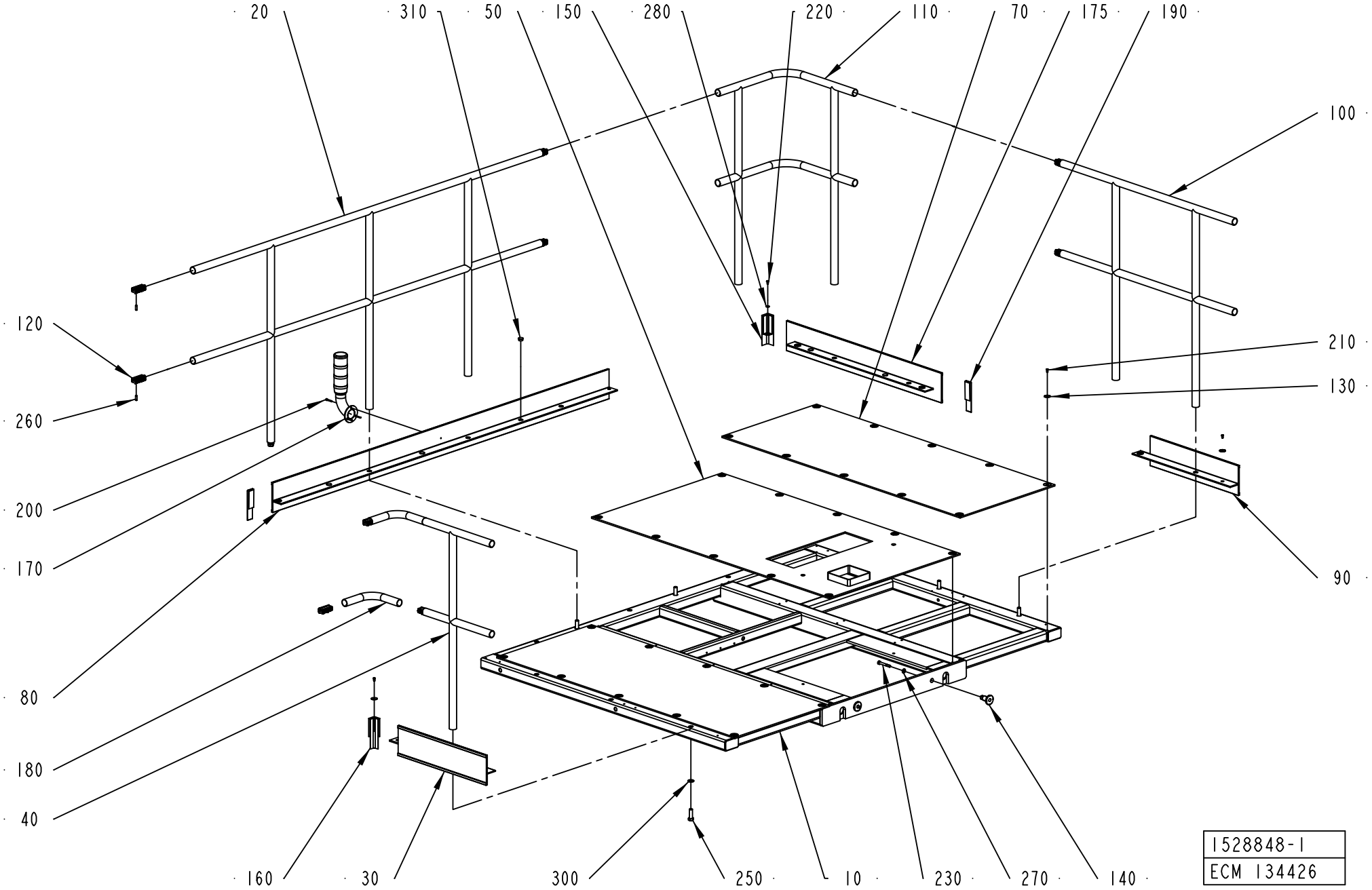
20
310
50
150
280
220
110
70
175
190
100
120
260
200
170
80
180
40
210
130
90
160
30
300
250
10
230
270
140
1528848-1
ECM 134426

ECM: 340456 - 20080403
Group number: 1528848-0100
Assembly Drawing: 1528848-1_1_AC

This list covers pages from 2-214 to 2-217

Pos	Part No	UN	Qty	Description	Page No
-					
010	598713-0000		1	PLATFORM	
020	1528849-0000		1	RAILING	
030	1528857-0000		1	TOE PLATE	
040	1528859-0000		1	RAILING	
050	1528868-0000		1	CHECKER PLATE	
070	1528870-0000		2	CHECKER PLATE	
080	1528871-0000		1	TOE PLATE	
090	1528872-0000		1	TOE PLATE	
100	1528873-0000		1	RAILING	
110	1010822-0000		1	RAILING	
120	985328-0000		10	CONNECTION	
130	90458-0073		37	WASHER 6,4/30, H=1,5	
140	2599941-0000		2	SPACER	
150	1524167-0000		1	CORNER STRIP	
160	1524168-0000		1	CORNER STRIP	
170	2540716-0100		1	SIGNAL LAMP	**2-219, 8-271**
175	2553122-0000		1	PLATE	
180	2551951-0000		2	RAILING	
190	1558947-0000		2	STRIP	
200	312115-0337		3	SCREW ISO4762 M5X35 A4 80	
210	90458-0072		37	SCREW ISO 7380 S M6X12 A2	
220	312105-0366		1	SCREW M6S ISO 4017 M6X12 A480	
230	312105-0506		2	SCREW M6S ISO 4014 M10X75 A480	
250	312111-0630		8	SCREW HEX.SOCK.HD.MC6S-TT 16X50 88 FZB	
260	312318-0453		20	SCREW ISO4029 M8X25 A4	
270	315105-0173		2	WASHER BRB 10,5X22 RFR	
280	315105-0165		1	WASHER BRB 8,4X16 RFR	
300	315105-0186		8	WASHER BRB 17X30 RFR	
310	90261-0033		5	PLUG, BLIND, PLASTIC GPN300F182	

Pos	Part No	UN	Qty	Description	Page No

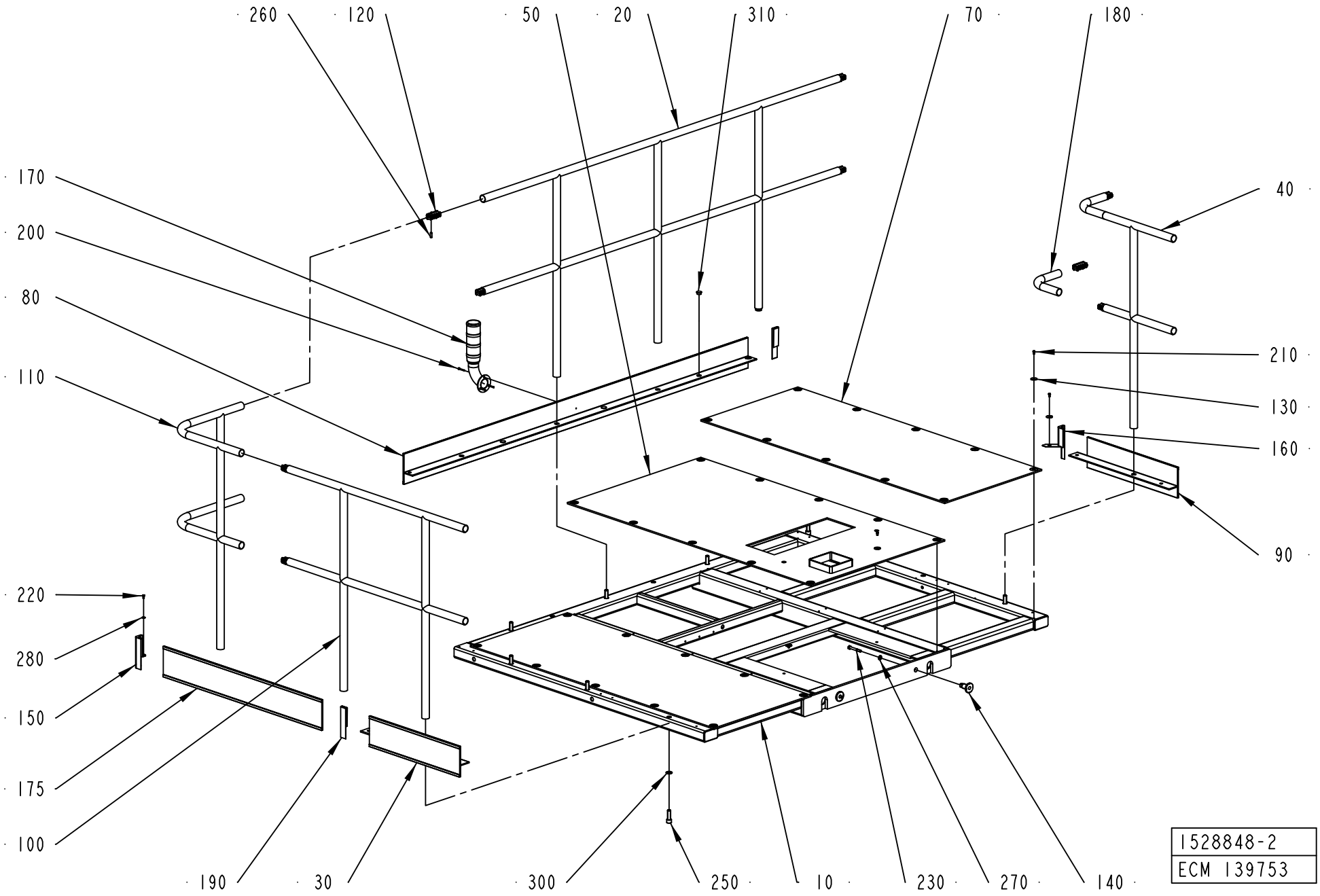
260
120
50
20
310
70
180
170
200
80
110
40
210
130
160
90
220
280
150
175
100
190
30
300
250
10
230
270
140
1528848-2
ECM 139753

ECM: 340456 - 20080403
Group number: 1528848-0100
Assembly Drawing: 1528848-2_1_AA

This list covers pages from 2-214 to 2-217

Pos	Part No	UN	Qty	Description	Page No
-					
010	598713-0000		1	PLATFORM	
020	1528849-0000		1	RAILING	
030	1528857-0000		1	TOE PLATE	
040	1528859-0000		1	RAILING	
050	1528868-0000		1	CHECKER PLATE	
070	1528870-0000		2	CHECKER PLATE	
080	1528871-0000		1	TOE PLATE	
090	1528872-0000		1	TOE PLATE	
100	1528873-0000		1	RAILING	
110	1010822-0000		1	RAILING	
120	985328-0000		10	CONNECTION	
130	90458-0073		37	WASHER 6,4/30, H=1,5	
140	2599941-0000		2	SPACER	
150	1524167-0000		1	CORNER STRIP	
160	1524168-0000		1	CORNER STRIP	
170	2540716-0100		1	SIGNAL LAMP	**2-219, 8-271**
175	2553122-0000		1	PLATE	
180	2551951-0000		2	RAILING	
190	1558947-0000		2	STRIP	
200	312115-0337		3	SCREW ISO4762 M5X35 A4 80	
210	90458-0072		37	SCREW ISO 7380 S M6X12 A2	
220	312105-0366		1	SCREW M6S ISO 4017 M6X12 A480	
230	312105-0506		2	SCREW M6S ISO 4014 M10X75 A480	
250	312111-0630		8	SCREW HEX.SOCK.HD.MC6S-TT 16X50 88 FZB	
260	312318-0453		20	SCREW ISO4029 M8X25 A4	
270	315105-0173		2	WASHER BRB 10,5X22 RFR	
280	315105-0165		1	WASHER BRB 8,4X16 RFR	
300	315105-0186		8	WASHER BRB 17X30 RFR	
310	90261-0033		5	PLUG, BLIND, PLASTIC GPN300F182	

Pos	Part No	UN	Qty	Description	Page No

SIGNAL LAMP

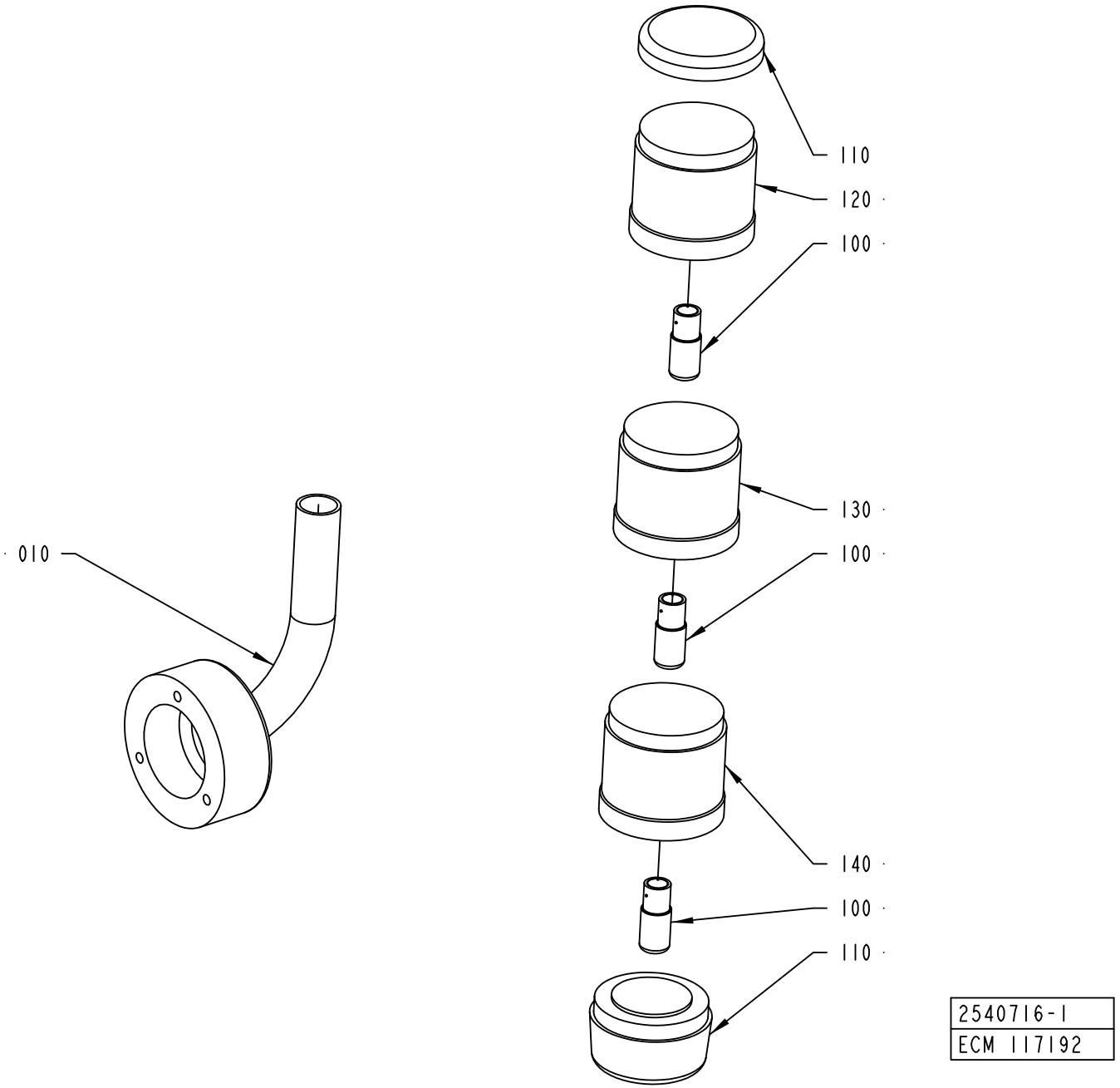

ECM: 189868 - 20041104
Group number: 2540716-0100
Assembly Drawing: 2540716-1_1_AA

Pos	Part No	UN	Qty	Description	Page No
-					
010	2540767-0000		1	PIPE	
100	90036-0068		3	BULB 6.5W 24V	
110	90458-0292		1	BASE, KT70-1001	
120	90458-0293		1	LIGHT ELEMENT, RED, KL70-401R	
130	90458-0294		1	LIGHT ELEMENT, YELLOW, KL70-401Y	
140	90458-0295		1	LIGHT ELEMENT, BLUE, KL70-401L	

Pos	Part No	UN	Qty	Description	Page No

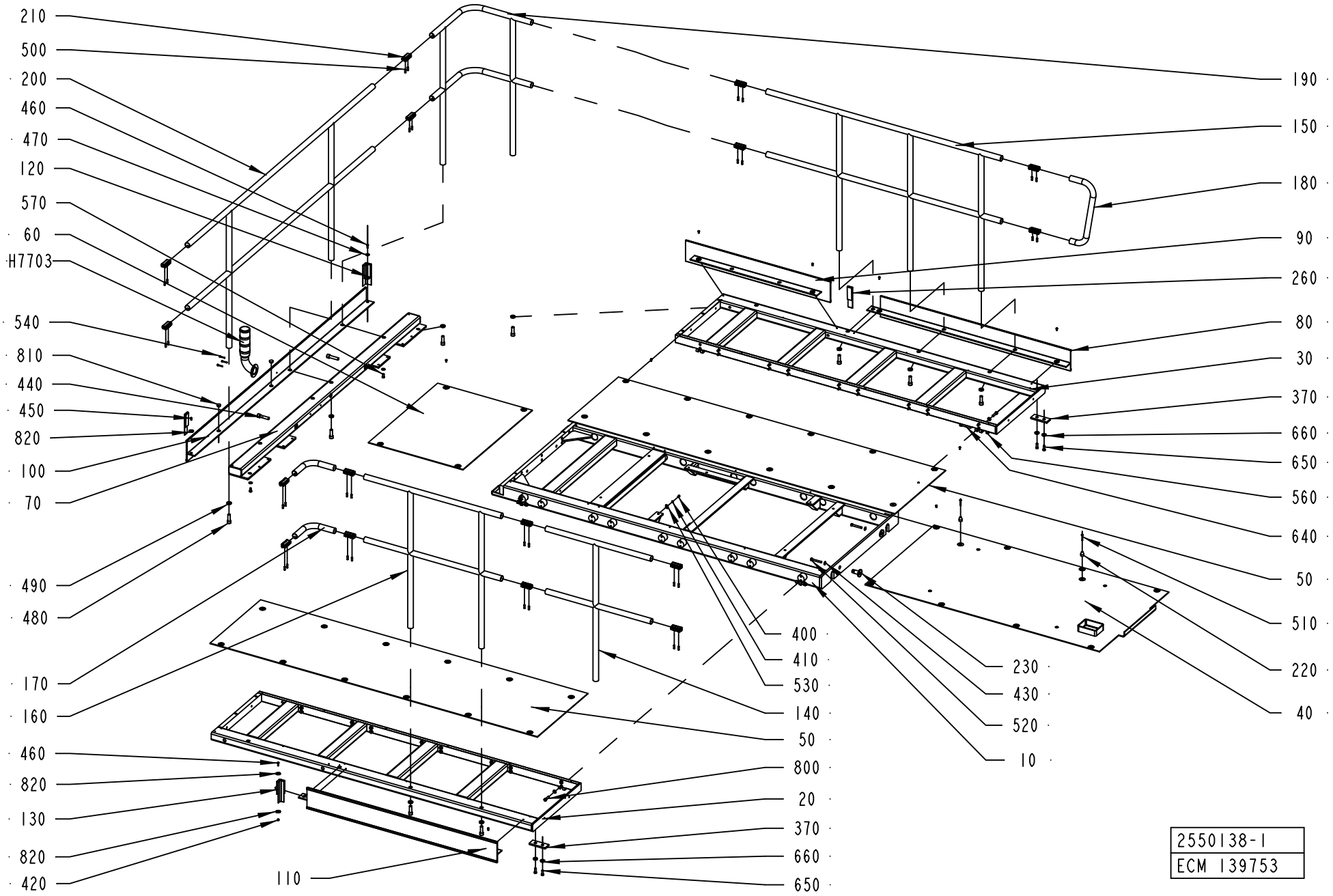
210
500
200
460
470
120
570
60
H7703
540
810
440
450
820
100
70
490
480
170
160
460
820
130
820
420
110
190
150
180
90
260
80
30
370
660
650
560
640
50
510
220
40
400
410
530
140
50
800
20
370
660
650
230
430
520
10
2550138-1
ECM 139753

ECM: 340559 - 20080403
Group number: 2550138-0100
Assembly Drawing: 2550138-1_1_AD

This list covers pages from 2-220 to 2-227

Pos	Part No	UN	Qty	Description	Page No
A3/FLEX NOPT LEFTSTAIR (See drawing on page: 2-220)					
060	2550145-0000		1	RAILING	
070	1524854-0000		1	BEAM	
090	2550193-0000		1	TOE PLATE	
210	985328-0000		16	CONNECTION	
260	1558947-0000		2	STRIP	
400	312125-0366		4	SCREW ISO 1207 M6X12 A4	
410	315105-0153		4	WASHER BRB 6,4X12 RFR	
420	312812-0316		1	HEXAGON NUT, NY-LOCK M6 A480	
430	315105-0173		40	WASHER BRB 10,5X22 RFR	
440	312115-0634		2	SCREW ISO4762 M16X70 A4 80	
450	90458-0072		43	SCREW ISO 7380 S M6X12 A2	
460	312105-0370		2	SCREW M6S ISO 4017 M6X20 A480	
470	315125-0153		1	WASHER TBRSB 6,4X22X4 A4	
480	312111-0630		9	SCREW HEX.SOCK.HD.MC6S-TT 16X50 88 FZB	
490	315111-0186		9	WASHER PLAIN, TBRB 17/30 H=6	
500	312318-0453		32	SCREW ISO4029 M8X25 A4	
530	352113-0204		4	ANCHOR PLATES FOR STRIPS, TYPE TM3S25-M	
570	312105-0491		2	SCREW M6S ISO 4017 M10X20 A480	
810	90261-0033		2	PLUG, BLIND, PLASTIC GPN300F182	
820	90458-0073		45	WASHER 6,4/30, H=1,5	
A3/FLEX NOPT RIGHTSTAIR (See drawing on page: 2-224)					
060	2550145-0000		1	RAILING	
070	1524854-0000		1	BEAM	
090	2550193-0000		1	TOE PLATE	
210	985328-0000		16	CONNECTION	
260	1558947-0000		2	STRIP	
400	312125-0366		4	SCREW ISO 1207 M6X12 A4	
410	315105-0153		4	WASHER BRB 6,4X12 RFR	
420	312812-0316		1	HEXAGON NUT, NY-LOCK M6 A480	
430	315105-0173		40	WASHER BRB 10,5X22 RFR	
440	312115-0634		2	SCREW ISO4762 M16X70 A4 80	
450	90458-0072		43	SCREW ISO 7380 S M6X12 A2	
460	312105-0370		2	SCREW M6S ISO 4017 M6X20 A480	
470	315125-0153		1	WASHER TBRSB 6,4X22X4 A4	
480	312111-0630		9	SCREW HEX.SOCK.HD.MC6S-TT 16X50 88 FZB	
490	315111-0186		9	WASHER PLAIN, TBRB 17/30 H=6	
500	312318-0453		32	SCREW ISO4029 M8X25 A4	
530	352113-0204		4	ANCHOR PLATES FOR STRIPS, TYPE TM3S25-M	
570	312105-0491		2	SCREW M6S ISO 4017 M10X20 A480	
810	90261-0033		2	PLUG, BLIND, PLASTIC GPN300F182	
820	90458-0073		45	WASHER 6,4/30, H=1,5	

Pos	Part No	UN	Qty	Description	Page No
A3/FLEX PT/FLEX LEFTSTAIR (See drawing on page: 2-222)					
090	2566258-0000		1	TOE PLATE	
210	985328-0000		20	CONNECTION	
260	1558947-0000		3	STRIP	
270	2553115-0000		1	PLATFORM	
280	2553116-0000		1	CHECKER PLATE	
290	2553118-0000		1	TOE PLATE	
300	2553119-0000		1	RAILING	
310	2553120-0000		1	RAILING	
330	2553122-0000		1	PLATE	
350	2553124-0000		2	PIN	
360	2553125-0000		1	CHECKER PLATE	
430	315105-0173		38	WASHER BRB 10,5X22 RFR	
450	90458-0072		56	SCREW ISO 7380 S M6X12 A2	
480	312111-0630		12	SCREW HEX.SOCK.HD.MC6S-TT 16X50 88 FZB	
490	315111-0186		12	WASHER PLAIN, TBRB 17/30 H=6	
500	312318-0453		40	SCREW ISO4029 M8X25 A4	
590	312105-0629		4	SCREW M6S ISO 4017 M16X45 A480	
600	312105-0633		14	SCREW M6S ISO 4014 M16X65 A480	
610	312105-0674		2	SCREW M6S ISO 4017 M20X50 A480	
620	312625-0326		2	HEXAGON THIN NUT, EN 24035 ML6M M20 A4	
630	315105-0186		18	WASHER BRB 17X30 RFR	
810	90261-0033		4	PLUG, BLIND, PLASTIC GPN300F182	
820	90458-0073		56	WASHER 6,4/30, H=1,5	
A3/FLEX PT/FLEX RIGHTSTAIR (See drawing on page: 2-226)					
090	2566258-0000		1	TOE PLATE	
210	985328-0000		20	CONNECTION	
260	1558947-0000		3	STRIP	
270	2553115-0000		1	PLATFORM	
280	2553116-0000		1	CHECKER PLATE	
290	2553118-0000		1	TOE PLATE	
300	2553119-0000		1	RAILING	
310	2553120-0000		1	RAILING	
330	2553122-0000		1	PLATE	
350	2553124-0000		2	PIN	
360	2553125-0000		1	CHECKER PLATE	
430	315105-0173		38	WASHER BRB 10,5X22 RFR	
450	90458-0072		56	SCREW ISO 7380 S M6X12 A2	
480	312111-0630		12	SCREW HEX.SOCK.HD.MC6S-TT 16X50 88 FZB	
490	315111-0186		12	WASHER PLAIN, TBRB 17/30 H=6	
500	312318-0453		40	SCREW ISO4029 M8X25 A4	
590	312105-0629		4	SCREW M6S ISO 4017 M16X45 A480	

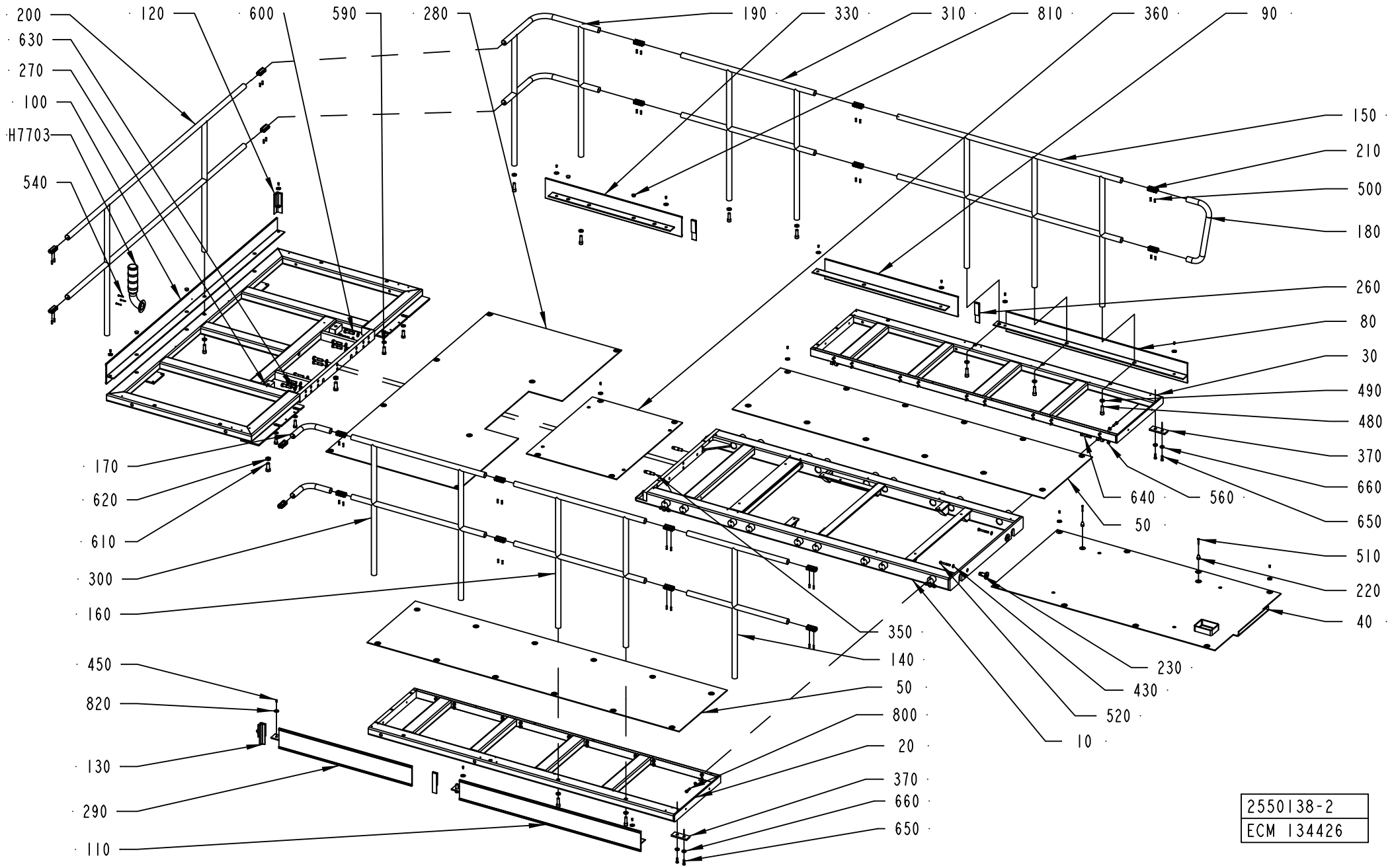
200
120
600
590
280
190
330
310
810
360
90
630
270
100
H7703
540
150
210
500
180
260
80
30
490
480
370
660
650
510
220
40
170
620
610
300
160
450
820
130
290
110
350
140
50
800
20
370
660
650
640
560
50
230
430
520
10
2550138-2
ECM 134426

Pos	Part No	UN	Qty	Description	Page No
A3/FLEX PT/FLEX RIGHTSTAIR (Cont'd) (See drawing on page: 2-226)					
600	312105-0633		14	SCREW M6S ISO 4014 M16X65 A480	
610	312105-0674		2	SCREW M6S ISO 4017 M20X50 A480	
620	312625-0326		2	HEXAGON THIN NUT, EN 24035 ML6M M20 A4	
630	315105-0186		18	WASHER BRB 17X30 RFR	
810	90261-0033		4	PLUG, BLIND, PLASTIC GPN300F182	
820	90458-0073		56	WASHER 6,4/30, H=1,5	
Common Parts					
010	2550144-0000		1	PLATFORM	
020	2550142-0000		1	PLATFORM	
030	2550143-0000		1	PLATFORM	
040	2550140-0000		1	CHECKER PLATE	
050	2550141-0000		2	CHECKER PLATE	
080	2550192-0000		1	TOE PLATE	
100	1523793-0000		1	TOE PLATE	
110	2550191-0000		1	TOE PLATE	
120	1524167-0000		1	CORNER STRIP	
130	1524168-0000		1	CORNER STRIP	
140	2550146-0000		1	RAILING	
150	2550189-0000		1	RAILING	
160	2550147-0000		1	RAILING	
170	2551951-0000		2	RAILING	
180	1558795-0000		1	RAILING	
190	1010822-0000		1	RAILING	
200	1548211-0000		1	RAILING	
220	1037571-0000		2	GUIDE BUSHING	
230	2599941-0000		2	SPACER	
370	1535036-0000		2	PLATE	
510	312109-0378		2	SCREW M6S ISO 4017 M6X40 A480	
520	312105-0506		2	SCREW M6S ISO 4014 M10X75 A480	
540	312115-0337		3	SCREW ISO4762 M5X35 A4 80	
560	312812-0322		4	HEXAGON NUT, NY-LOCK M12 A480	
640	312115-0546		4	SCREW ISO4762 M12X70 A4 80	
650	312105-0495		4	SCREW M6S ISO 4017 M10X30 A480	
660	315125-0173		4	WASHER TBRSB 10,5X28X6 A4	
800	90458-2845		36	SCREW,HEXAGON HEAD M6S ISO 4017 M10X45	
H7703	2540716-0100		1	SIGNAL LAMP	**2-219, 8-271**

Pos	Part No	UN	Qty	Description	Page No

Machine Type	Group Description	Used-In	Group Number	Page No

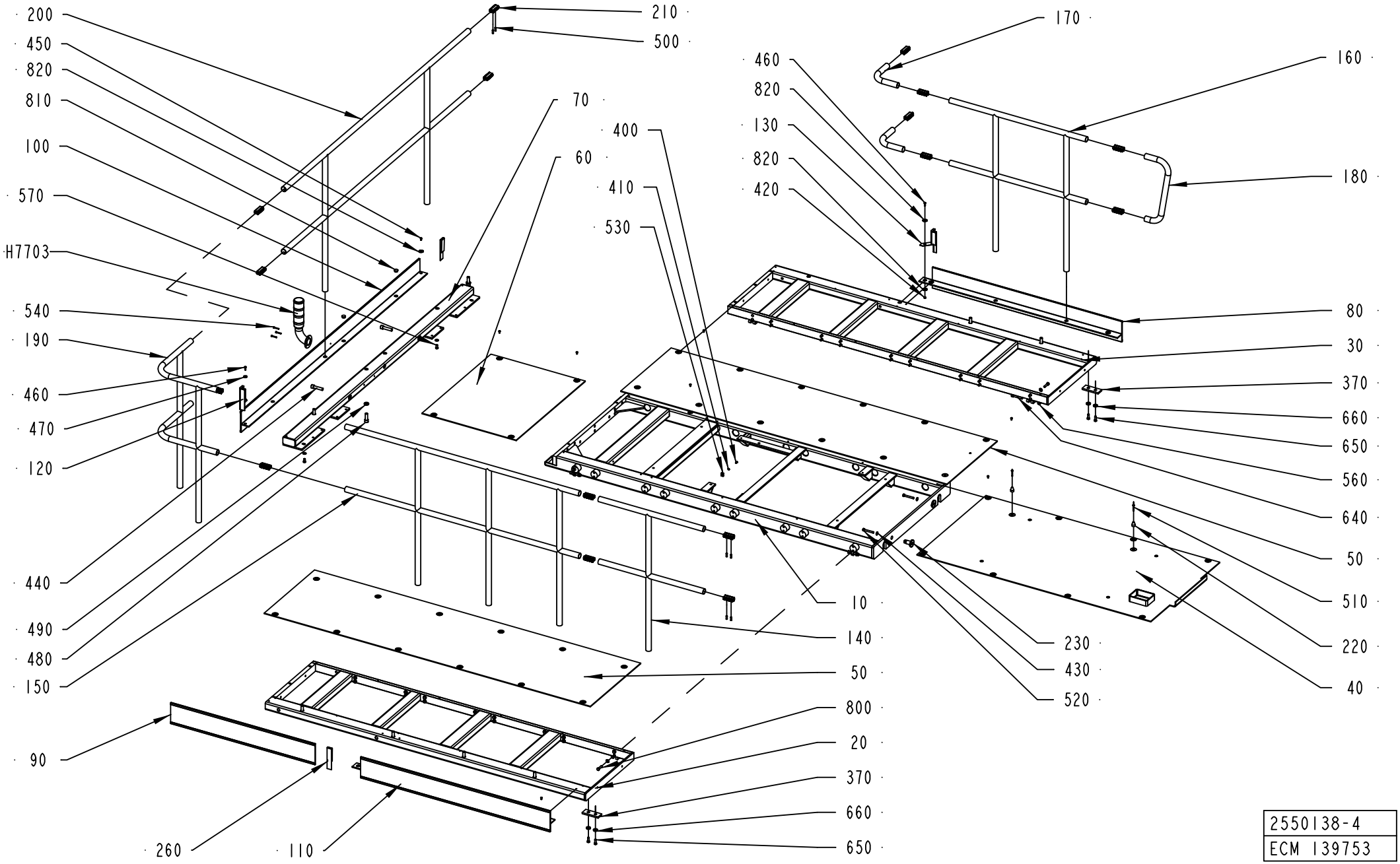
200
450
820
810
100
570
H7703
540
190
460
470
120
440
490
480
150
90
260
110
210
500
70
60
400
410
530
10
140
50
800
20
370
660
650
170
160
460
820
130
820
420
180
80
30
370
660
650
560
640
50
510
220
40
230
430
520
2550138-4
ECM 139753

ECM: 340559 - 20080403
Group number: 2550138-0100
Assembly Drawing: 2550138-4_1_AA

This list covers pages from 2-220 to 2-227

Pos	Part No	UN	Qty	Description	Page No
SEE PREVIOUS LISTS PAGES: 2-221, 2-223.					

Pos	Part No	UN	Qty	Description	Page No

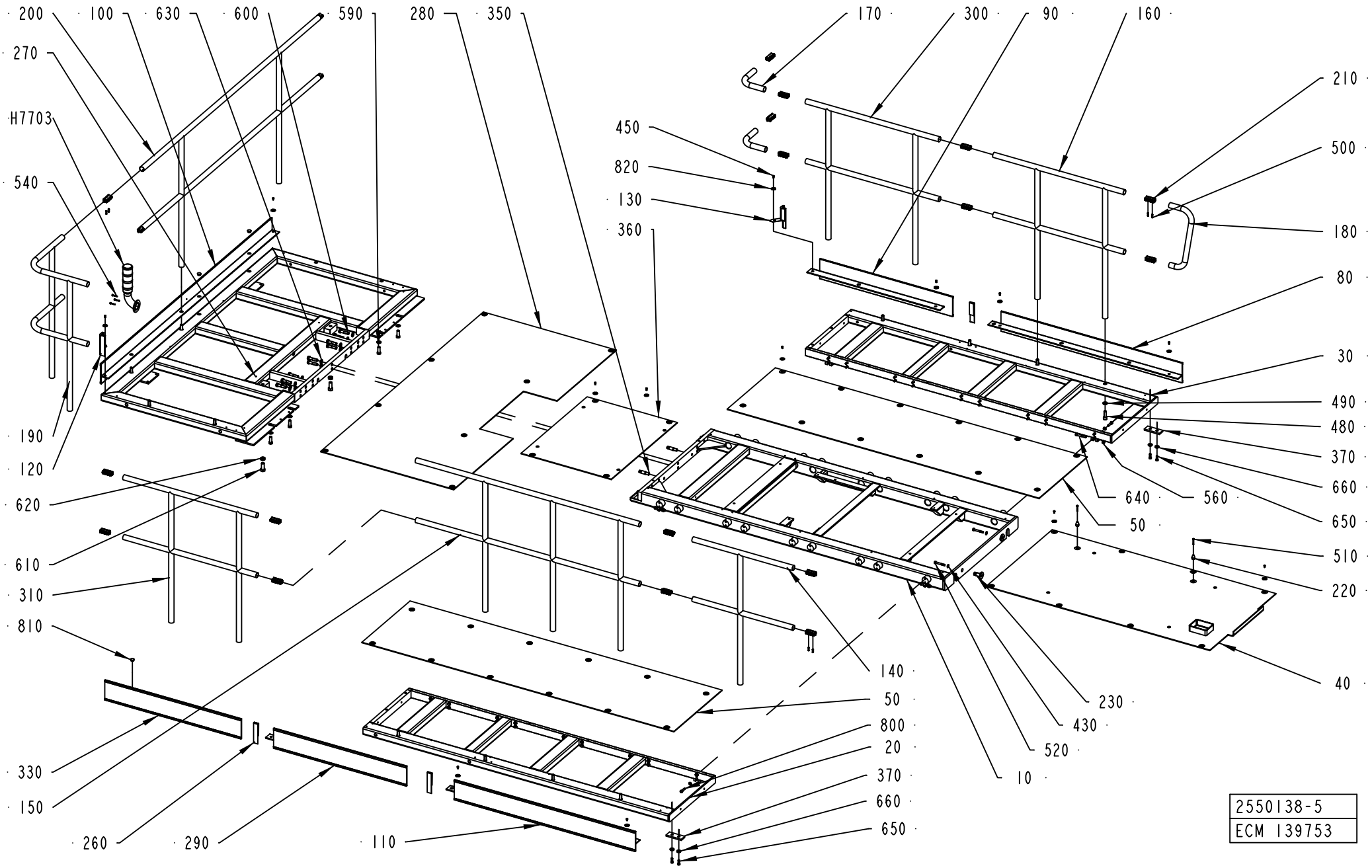
200
100
630
600
590
280
350
170
300
90
160
270
H7703
540
450
820
130
360
210
500
180
80
30
490
480
370
660
650
640
560
50
510
220
40
230
430
520
10
190
120
620
610
310
810
330
150
260
290
110
140
50
800
20
370
660
650
2550138-5
ECM 139753

ECM: 340559 - 20080403
Group number: 2550138-0100
Assembly Drawing: 2550138-5_1_AA

This list covers pages from 2-220 to 2-227

Pos	Part No	UN	Qty	Description	Page No
SEE PREVIOUS LISTS PAGES: 2-221, 2-223.					

Pos	Part No	UN	Qty	Description	Page No

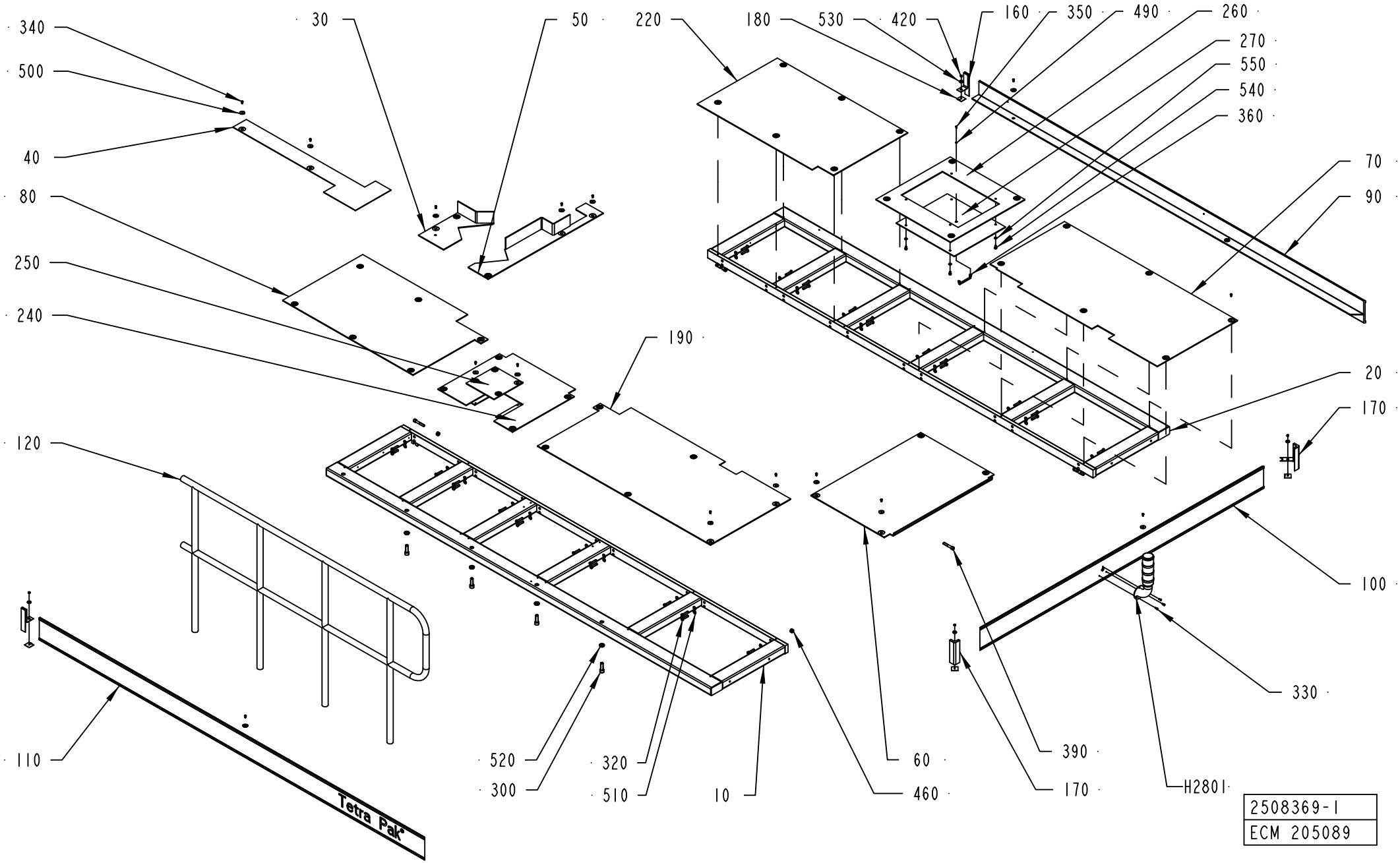
340
500
40
80
250
240
120
110
30
50
220
180
530
420
160
350
490
260
270
550
540
360
70
90
190
20
170
100
330
390
170
H2801
60
460
520
300
320
510
10
Tetra Pak
2508369-1
ECM 205089

ECM: 998711 - 20061104
Group number: 2508369-0200
Assembly Drawing: 2508369-1_1_AE

Pos	Part No	UN	Qty	Description	Page No
A3/FLEX TBA, A3/FLEX TPA					
010	2508370-0000		1	PLATFORM	
020	2508371-0000		1	PLATFORM	
030	2508385-0000		1	CHECKER PLATE	
040	2508380-0000		1	CHECKER PLATE	
050	2508381-0000		1	CHECKER PLATE	
060	1254030-0000		1	CHECKER PLATE	
080	2508379-0000		1	CHECKER PLATE	
090	2564565-0000		1	TOE PLATE	
110	2564566-0000		1	TOE PLATE	
120	1524870-0000		1	RAILING	
220	2508384-0000		1	CHECKER PLATE	
240	2587289-0000		1	CHECKER PLATE	
250	2587290-0000		1	CHECKER PLATE	
260	2587291-0000		1	CHECKER PLATE	
270	2587292-0000		1	CHECKER PLATE	
300	312111-0630		4	SCREW HEX.SOCK.HD.MC6S-TT 16X50 88 FZB	
340	90458-0072		51	SCREW ISO 7380 S M6X12 A2	
350	312105-0289		2	SCREW M6S H4X10 A4 70 ISO4017/DIN933	
360	90458-2633		1	HANDLE, 1045-05	
490	315105-0136		2	WASHER BRB 4,3X8 RFR	
500	90458-0073		51	WASHER 6,4/30, H=1,5	
520	315111-0186		4	WASHER PLAIN, TBRB 17/30 H=6	
540	312115-0447		4	SCREW ISO4762 M8X12 A4 80	
550	315105-0165		4	WASHER BRB 8,4X16 RFR	
A3/FLEX TGA					
010	2769620-0000		1	PLATFORM	
020	2769619-0000		1	PLATFORM	
030	2508385-0000		1	CHECKER PLATE	
040	2508380-0000		1	CHECKER PLATE	
050	2746712-0000		1	CHECKER PLATE	
060	2776897-0000		1	CHECKER PLATE	
080	2508379-0000		1	CHECKER PLATE	
090	2564568-0000		1	TOE PLATE	
110	2564567-0000		1	TOE PLATE	
120	2537844-0000		1	RAILING	
220	2508384-0000		1	CHECKER PLATE	
240	2776895-0000		1	CHECKER PLATE	
250	2587290-0000		1	CHECKER PLATE	
260	2776896-0000		1	CHECKER PLATE	
270	2587292-0000		1	CHECKER PLATE	
300	312111-0630		5	SCREW HEX.SOCK.HD.MC6S-TT 16X50 88 FZB	
340	90458-0072		51	SCREW ISO 7380 S M6X12 A2	
350	312105-0289		2	SCREW M6S H4X10 A4 70 ISO4017/DIN933	
360	90458-2633		1	HANDLE, 1045-05	
490	315105-0136		2	WASHER BRB 4,3X8 RFR	
500	90458-0073		51	WASHER 6,4/30, H=1,5	
520	315111-0186		5	WASHER PLAIN, TBRB 17/30 H=6	
540	312115-0447		4	SCREW ISO4762 M8X12 A4 80	
550	315105-0165		4	WASHER BRB 8,4X16 RFR	
Common Parts					
070	2508374-0000		1	CHECKER PLATE	
100	1523784-0000		1	TOE PLATE	
130	1036241-0000		52	WASHER	
160	1254025-0000		2	STRIP	
170	1254027-0000		2	CORNER STRIP	
180	1254028-0000		4	FASTENING PLATE	
190	2508375-0000		1	CHECKER PLATE	
320	90458-2845		40	SCREW,HEXAGON HEAD M6S ISO 4017 M10X45	
330	312115-0327		3	SCREW ISO4762 M5X12 A4 80	
390	312115-0546		4	SCREW ISO4762 M12X70 A4 80	
420	312605-0316		4	HEXAGON NUT, M6M M6 A280	
460	312812-0322		4	HEXAGON NUT, NY-LOCK M12 A480	
510	315105-0173		40	WASHER BRB 10,5X22 RFR	
530	315125-0153		4	WASHER TBRSB 6,4X22X4 A4	
H2801	2540716-0100		1	SIGNAL LAMP	**2-219, 8-271**

Machine Type	Group Description	Used-In	Group Number	Page No

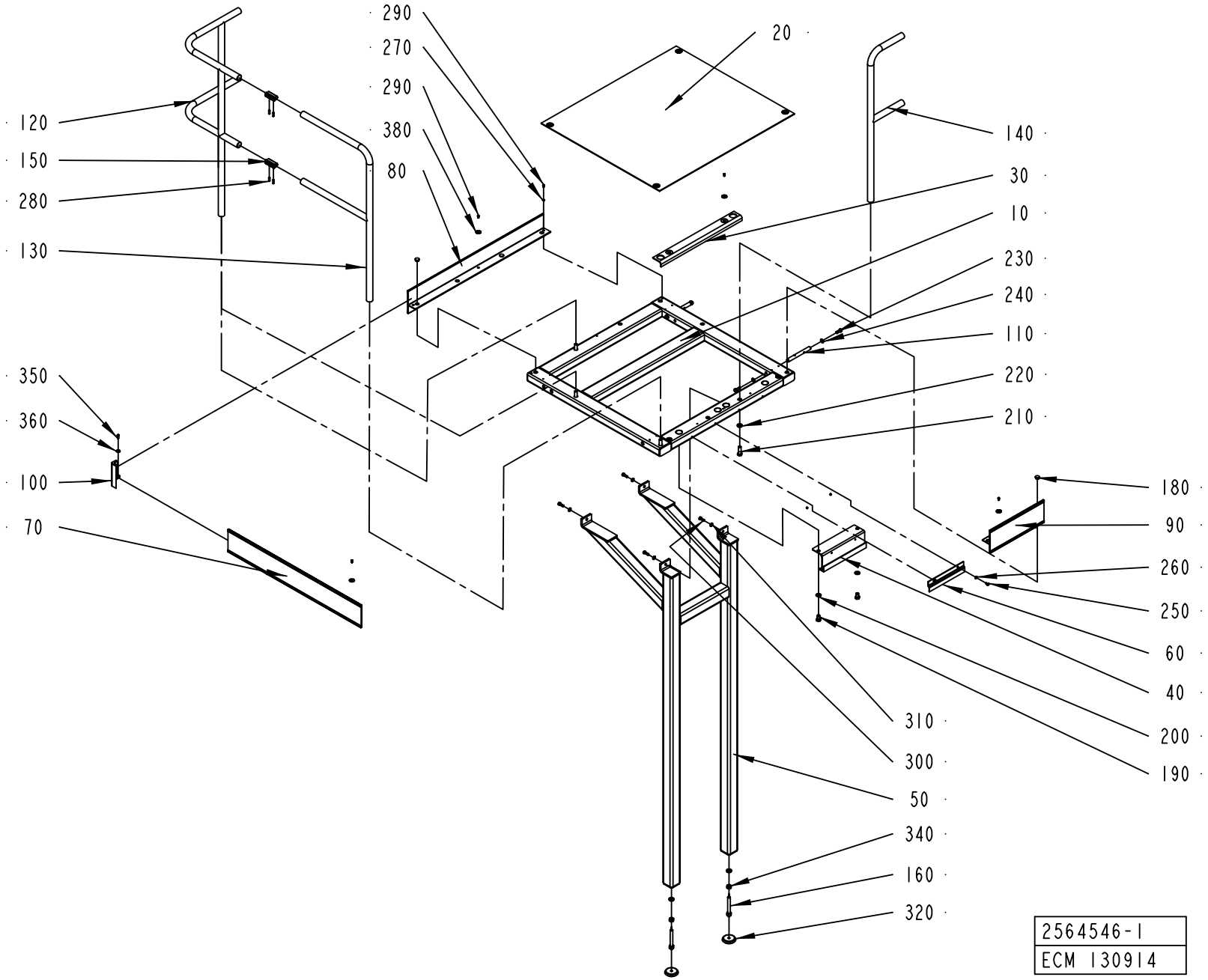
290
270
290
380
80
20
120
150
280
130
140
30
10
230
240
110
220
210
350
360
100
70
180
90
260
250
60
40
200
190
310
300
50
340
160
320
2564546-1
ECM 130914

ECM: 189874 - 20041104
Group number: 2564546-0100
Assembly Drawing: 2564546-1_1_AB

This list covers pages from 2-230 to 2-233

Pos	Part No	UN	Qty	Description	Page No
LEFTSTAIR (See drawing on page: 2-230)					
070	1524177-0000		1	TOE PLATE	
RIGHTSTAIR (See drawing on page: 2-232)					
070	1524180-0000		1	TOE PLATE	
Common Parts					
010	1524171-0000		1	FRAME	
020	1524172-0000		1	CHECKER PLATE	
030	1524173-0000		1	CHECKER PLATE	
040	1524174-0000		1	HOOK	
050	1524175-0000		1	LEG	
060	1524176-0000		1	CLAMP	
080	2564545-0000		1	PLATE	
090	1524179-0000		1	TOE PLATE	
100	1524167-0000		1	CORNER STRIP	
110	1524181-0000		2	PIN	
120	1010822-0000		1	RAILING	
130	1524182-0000		1	RAILING	
140	1524864-0000		1	RAILING	
150	985328-0000		2	CONNECTION	
160	1524185-0000		2	EXTENSION PIECE	
180	90261-0033		3	PLUG, BLIND, PLASTIC GPN300F182	
190	312105-0622		2	SCREW M6S ISO 4017 M16X25 A480	
200	315105-0186		2	WASHER BRB 17X30 RFR	
210	312111-0630		4	SCREW HEX.SOCK.HD.MC6S-TT 16X50 88 FZB	
220	315111-0186		6	WASHER PLAIN, TBRB 17/30 H=6	
230	312105-0536		4	SCREW M6S ISO 4017 M12X30 A480	
240	315105-0178		4	WASHER BRB 13X24 RFR	
250	312105-0447		2	SCREW M6S ISO 4017 M8X12 A480	
260	315101-0165		2	WASHER PLAIN, BRB, 8,4/16 H=1,5	
270	315101-0153		1	WASHER PLAIN, BRB, 6,4/12 H=1,5	
280	312318-0453		4	SCREW ISO4029 M8X25 A4	
290	90458-0072		12	SCREW ISO 7380 S M6X12 A2	
300	312105-0495		4	SCREW M6S ISO 4017 M10X30 A480	
310	315105-0173		4	WASHER BRB 10,5X22 RFR	
320	90347-0009		2	FLOOR PLATE, NO 1256730	
340	312605-0324		2	HEXAGON NUT, M6M M16 A280	
350	312105-0370		1	SCREW M6S ISO 4017 M6X20 A480	
360	315125-0153		1	WASHER TBRSB 6,4X22X4 A4	
380	90458-0073		11	WASHER 6,4/30, H=1,5	

Pos	Part No	UN	Qty	Description	Page No

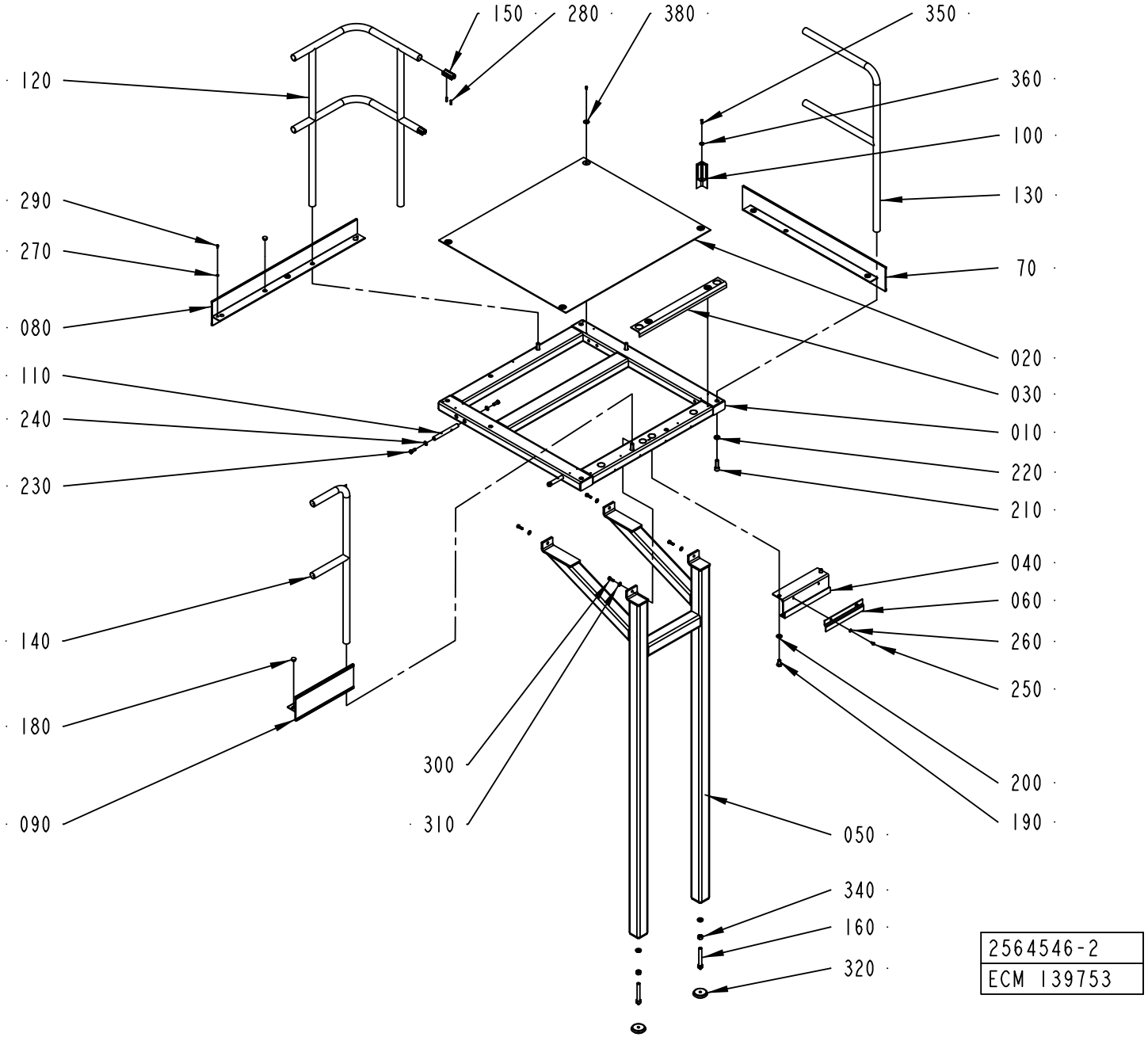
150
280
380
350
120
360
100
290
130
270
70
080
020
110
030
240
010
230
220
210
040
140
060
260
250
180
300
200
310
190
090
050
340
160
320
2564546-2
ECM 139753

Pos	Part No	UN	Qty	Description	Page No
LEFTSTAIR (See drawing on page: 2-230)					
070	1524177-0000		1	TOE PLATE	
RIGHTSTAIR (See drawing on page: 2-232)					
070	1524180-0000		1	TOE PLATE	
Common Parts					
010	1524171-0000		1	FRAME	
020	1524172-0000		1	CHECKER PLATE	
030	1524173-0000		1	CHECKER PLATE	
040	1524174-0000		1	HOOK	
050	1524175-0000		1	LEG	
060	1524176-0000		1	CLAMP	
080	2564545-0000		1	PLATE	
090	1524179-0000		1	TOE PLATE	
100	1524167-0000		1	CORNER STRIP	
110	1524181-0000		2	PIN	
120	1010822-0000		1	RAILING	
130	1524182-0000		1	RAILING	
140	1524864-0000		1	RAILING	
150	985328-0000		2	CONNECTION	
160	1524185-0000		2	EXTENSION PIECE	
180	90261-0033		3	PLUG, BLIND, PLASTIC GPN300F182	
190	312105-0622		2	SCREW M6S ISO 4017 M16X25 A480	
200	315105-0186		2	WASHER BRB 17X30 RFR	
210	312111-0630		4	SCREW HEX.SOCK.HD.MC6S-TT 16X50 88 FZB	
220	315111-0186		6	WASHER PLAIN, TBRB 17/30 H=6	
230	312105-0536		4	SCREW M6S ISO 4017 M12X30 A480	
240	315105-0178		4	WASHER BRB 13X24 RFR	
250	312105-0447		2	SCREW M6S ISO 4017 M8X12 A480	
260	315101-0165		2	WASHER PLAIN, BRB, 8,4/16 H=1,5	
270	315101-0153		1	WASHER PLAIN, BRB, 6,4/12 H=1,5	
280	312318-0453		4	SCREW ISO4029 M8X25 A4	
290	90458-0072		12	SCREW ISO 7380 S M6X12 A2	
300	312105-0495		4	SCREW M6S ISO 4017 M10X30 A480	
310	315105-0173		4	WASHER BRB 10,5X22 RFR	
320	90347-0009		2	FLOOR PLATE, NO 1256730	
340	312605-0324		2	HEXAGON NUT, M6M M16 A280	
350	312105-0370		1	SCREW M6S ISO 4017 M6X20 A480	
360	315125-0153		1	WASHER TBRSB 6,4X22X4 A4	
380	90458-0073		11	WASHER 6,4/30, H=1,5	

Pos	Part No	UN	Qty	Description	Page No

STAIR CASE

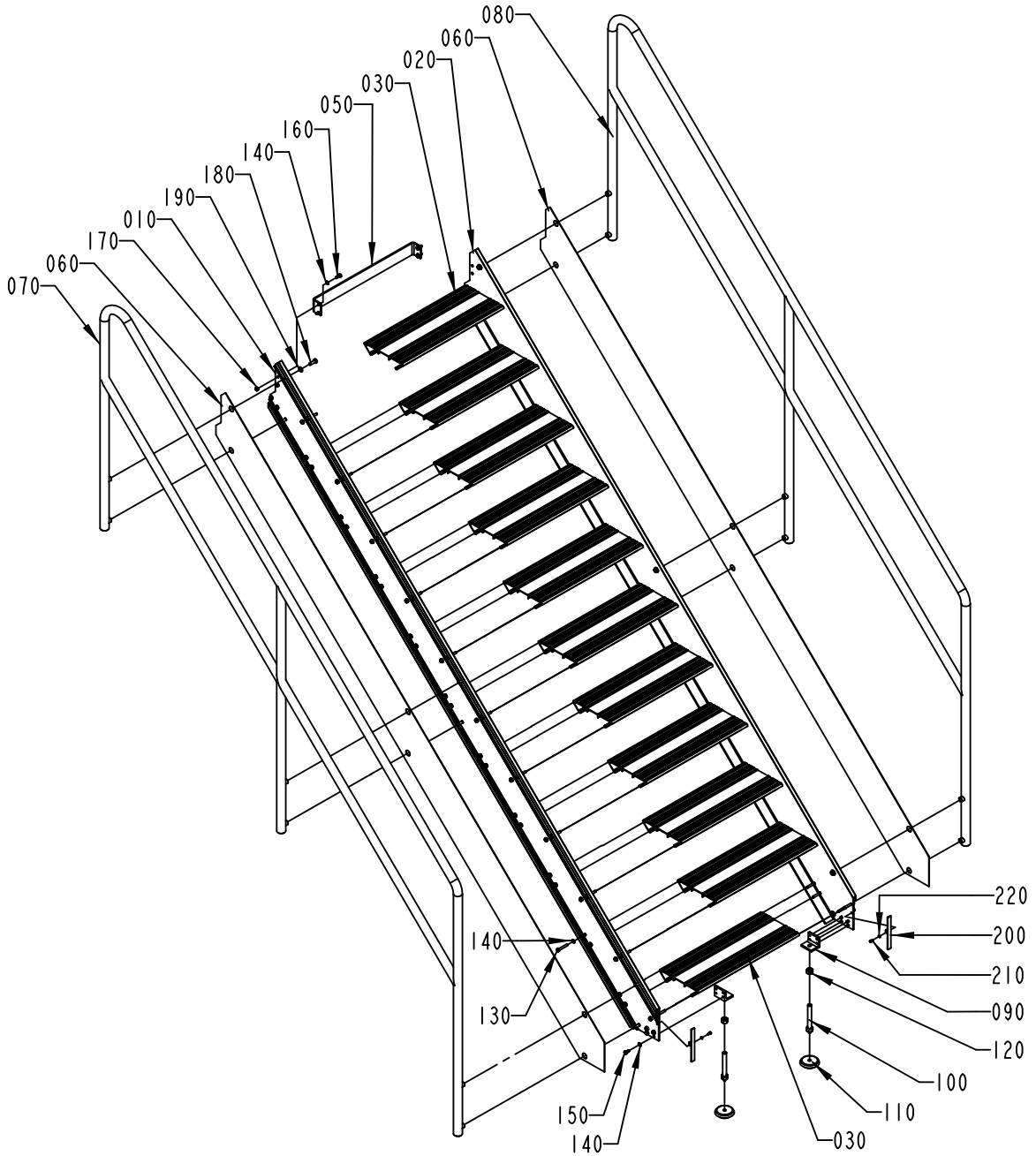

1523777-1
ECN 93149

ECM: 189875 - 20041104
Group number: 1523777-0100
Assembly Drawing: 1523777-1_1_AB

Pos	Part No	UN	Qty	Description	Page No
-					
010	1524186-0000		1	PROFILE	
020	1524187-0000		1	PROFILE	
030	1524188-0000		10	STAIR	
050	1524190-0000		1	BRACKET	
060	1524191-0000		2	RIM	
070	1524192-0000		1	RAILING	
080	1524193-0000		1	RAILING	
090	1037391-0000		2	CANTILEVER	
100	1524185-0000		2	EXTENSION PIECE	
110	90347-0009		2	FLOOR PLATE, NO 1256730	
120	312605-0324		2	HEXAGON NUT, M6M M16 A280	
130	312104-0461		88	SCREW M6S M8X50H FZB	
140	315105-0165		94	WASHER BRB 8,4X16 RFR	
150	312105-0449		8	SCREW M6S ISO 4017 M8X16 A480	
160	312105-0451		6	SCREW M6S ISO 4017 M8X20 A480	
170	312605-0318		4	HEXAGON NUT, M6M M8 A280	
180	312105-0495		12	SCREW M6S ISO 4017 M10X30 A480	
190	315105-0173		12	WASHER BRB 10,5X22 RFR	
200	1558946-0000		2	PLUG	
210	312115-0327		2	SCREW ISO4762 M5X12 A4 80	
220	315105-0146		2	WASHER BRB 5,3X10 RFR	

Pos	Part No	UN	Qty	Description	Page No

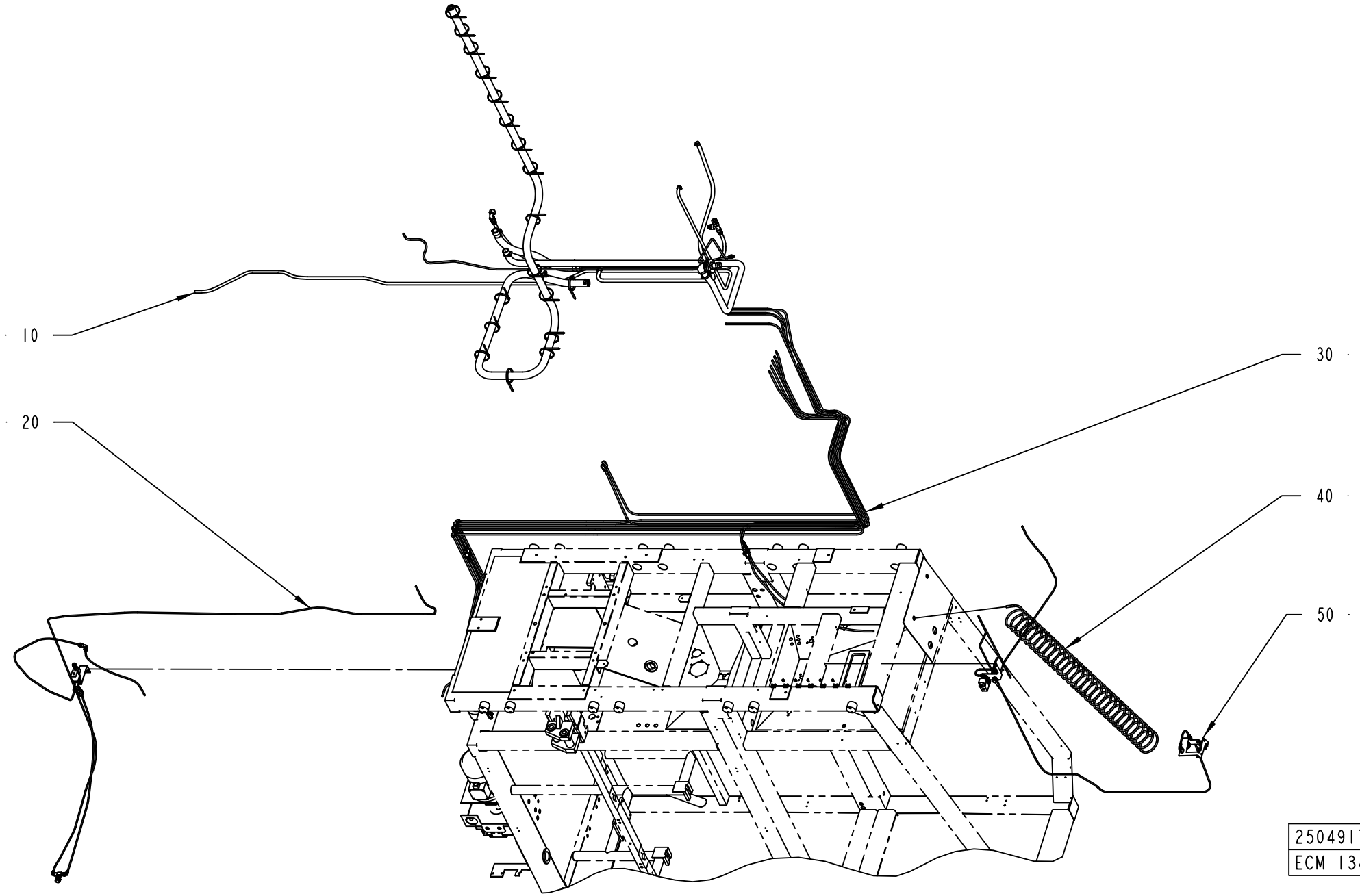
10
20
30
40
50
2504917-1
ECM 134706

ECM: 139369 - 20031007
Group number: 2504917-0100
Assembly Drawing: 2504917-1_1_AB

Pos	Part No	UN	Qty	Description	Page No
A3/FLEX DIMC/FLEX					
030	2514255-0100		1	PIPE WORK-WATER	**2-239, 2-241**
050	2615463-0100		1	FLUSHING DEVICE	**2-243, 2-245, 2-247**
A3/FLEX NODIMC					
030	2514255-0100		1	PIPE WORK-WATER	**2-239, 2-241**
Common Parts					
010	2514205-0100		1	PIPE WORK-WATER	**2-249**
020	2514254-0100		1	TUBE FLUSHING	**2-251, 2-253**
040	1095681-0100		1	SPRAY GUN	**2-255**

Pos	Part No	UN	Qty	Description	Page No

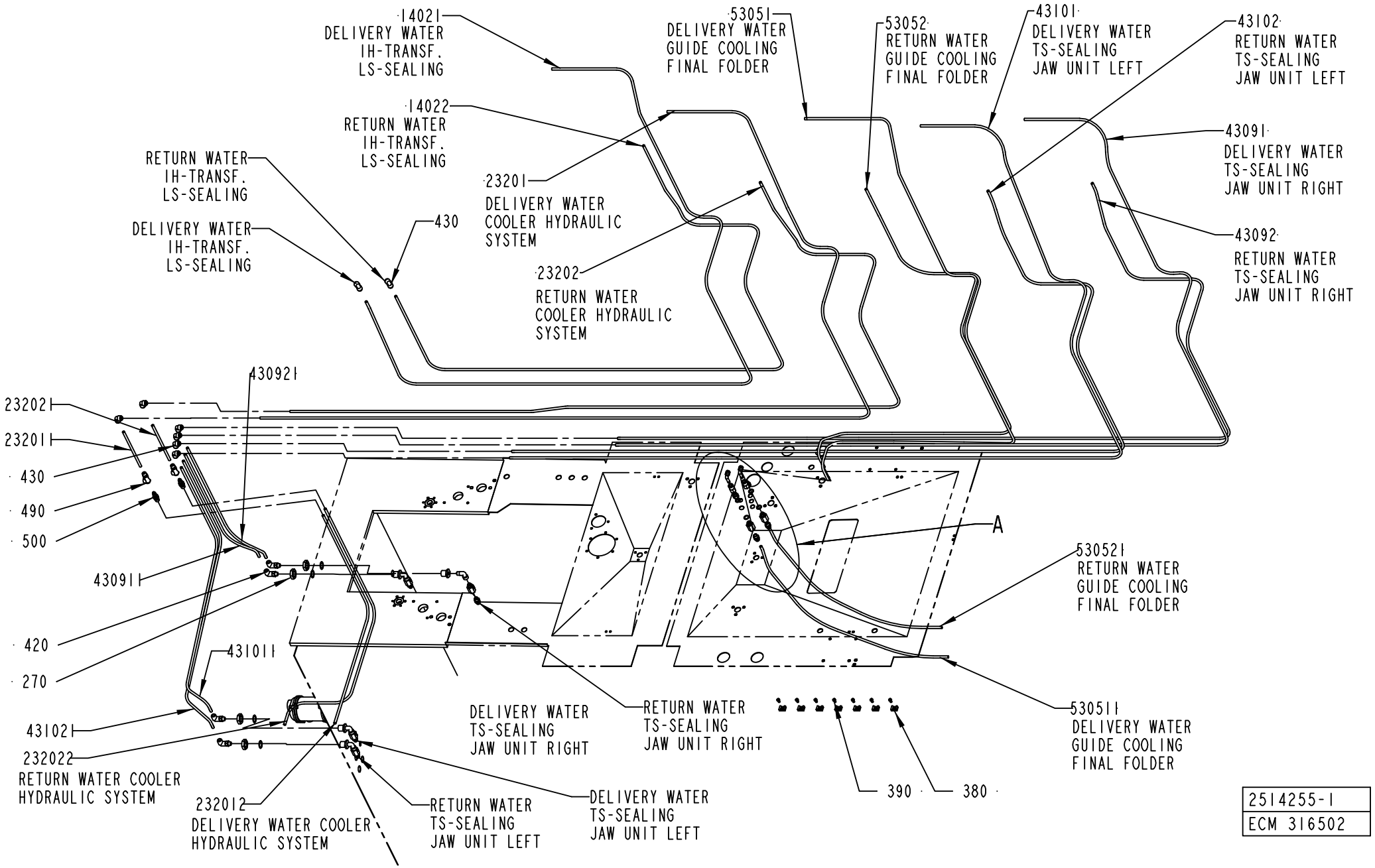
14021
DELIVERY WATER
IH-TRANSF.
LS-SEALING
14022
RETURN WATER
IH-TRANSF.
LS-SEALING
RETURN WATER
IH-TRANSF.
LS-SEALING
DELIVERY WATER
IH-TRANSF.
LS-SEALING
430
23201
DELIVERY WATER
COOLER HYDRAULIC
SYSTEM
23202
RETURN WATER
COOLER HYDRAULIC
SYSTEM
53051
DELIVERY WATER
GUIDE COOLING
FINAL FOLDER
53052
RETURN WATER
GUIDE COOLING
FINAL FOLDER
43101
DELIVERY WATER
TS-SEALING
JAW UNIT LEFT
43102
RETURN WATER
TS-SEALING
JAW UNIT LEFT
43091
DELIVERY WATER
TS-SEALING
JAW UNIT RIGHT
43092
RETURN WATER
TS-SEALING
JAW UNIT RIGHT
430921
23202
23201
430
490
500
43091
420
270
431011
43102
232022
RETURN WATER COOLER
HYDRAULIC SYSTEM
232012
DELIVERY WATER COOLER
HYDRAULIC SYSTEM
RETURN WATER
TS-SEALING
JAW UNIT LEFT
DELIVERY WATER
TS-SEALING
JAW UNIT LEFT
DELIVERY WATER
TS-SEALING
JAW UNIT RIGHT
RETURN WATER
TS-SEALING
JAW UNIT RIGHT
A
530521
RETURN WATER
GUIDE COOLING
FINAL FOLDER
530511
DELIVERY WATER
GUIDE COOLING
FINAL FOLDER
390
380
2514255-1
ECM 316502

ECM: 329208 - 20080401
Group number: 2514255-0100
Assembly Drawing: 2514255-1_1_AB

This list covers pages from 2-238 to 2-241

Pos	Part No	UN	Qty	Description	Page No
-					
010	276398-0000		4	HEXAGON NIPPLE	
100	90140-0013		4	ELBOW, 90 INT/EXT, 2020-1/4-1/4	
14021	90166-0118	MM	3300	TUBE 8 MM PA BLACK	
14022	90166-0118	MM	3900	TUBE 8 MM PA BLACK	
23201	90166-0118	MM	4400	TUBE 8 MM PA BLACK	
232011	90166-0118	MM	200	TUBE 8 MM PA BLACK	
232012	90166-0118	MM	1100	TUBE 8 MM PA BLACK	
23202	90166-0118	MM	4000	TUBE 8 MM PA BLACK	
232021	90166-0118	MM	200	TUBE 8 MM PA BLACK	
232022	90166-0118	MM	1300	TUBE 8 MM PA BLACK	
260	90600-0775		6	BALL VALVE G1/4, 406F-1/4"	
270	90330-0093		4	NUT, HEXAGON, G1/2	
280	90030-0166		2	NIPPLE,REDUCING G1/4"-G1/4"	
380	352113-0204		7	ANCHOR PLATES FOR STRIPS, TYPE TM3S25-M	
390	312125-0364		7	SCREW ISO 1207 M6X10 A4	
400	315237-0110		4	WASHER,PL.RND.AL.13,5/18,H=1,5	
410	315233-0113		4	WASHER CAPTIVE SEALING G1/2	
420	90055-0267		4	ELBOW PIPE JOINT,EXT.THREAD,D=8 MM G1/4	
430	90055-0269		8	ELBOW PIPE JOINT 8X8 MM	
43091	90166-0118	MM	4630	TUBE 8 MM PA BLACK	
430911	90166-0118	MM	650	TUBE 8 MM PA BLACK	
43092	90166-0118	MM	4000	TUBE 8 MM PA BLACK	
430921	90166-0118	MM	700	TUBE 8 MM PA BLACK	
43101	90166-0118	MM	5350	TUBE 8 MM PA BLACK	
431011	90166-0118	MM	650	TUBE 8 MM PA BLACK	
43102	90166-0118	MM	4800	TUBE 8 MM PA BLACK	
431021	90166-0118	MM	700	TUBE 8 MM PA BLACK	
440	90055-0266		2	STRAIGHT CONNECTION	
450	90055-0274		6	STRAIGHT COUPLING, D=8 MM - G1/4"	
460	90055-0204		2	ELBOW WITH TAILPIECE 8/8 MM LONG	
490	90459-0941		2	QUICK COUPLING, PLCD 130-M8	
500	90459-0960		2	QUICK COUPLING, PLCD 200-M8	
53051	90166-0118	MM	3370	TUBE 8 MM PA BLACK	
530511	90166-0118	MM	980	TUBE 8 MM PA BLACK	
53052	90166-0118	MM	2840	TUBE 8 MM PA BLACK	
530521	90166-0118	MM	940	TUBE 8 MM PA BLACK	

Pos	Part No	UN	Qty	Description	Page No

Machine Type | Group Description | Used-In | Group Number | Page No

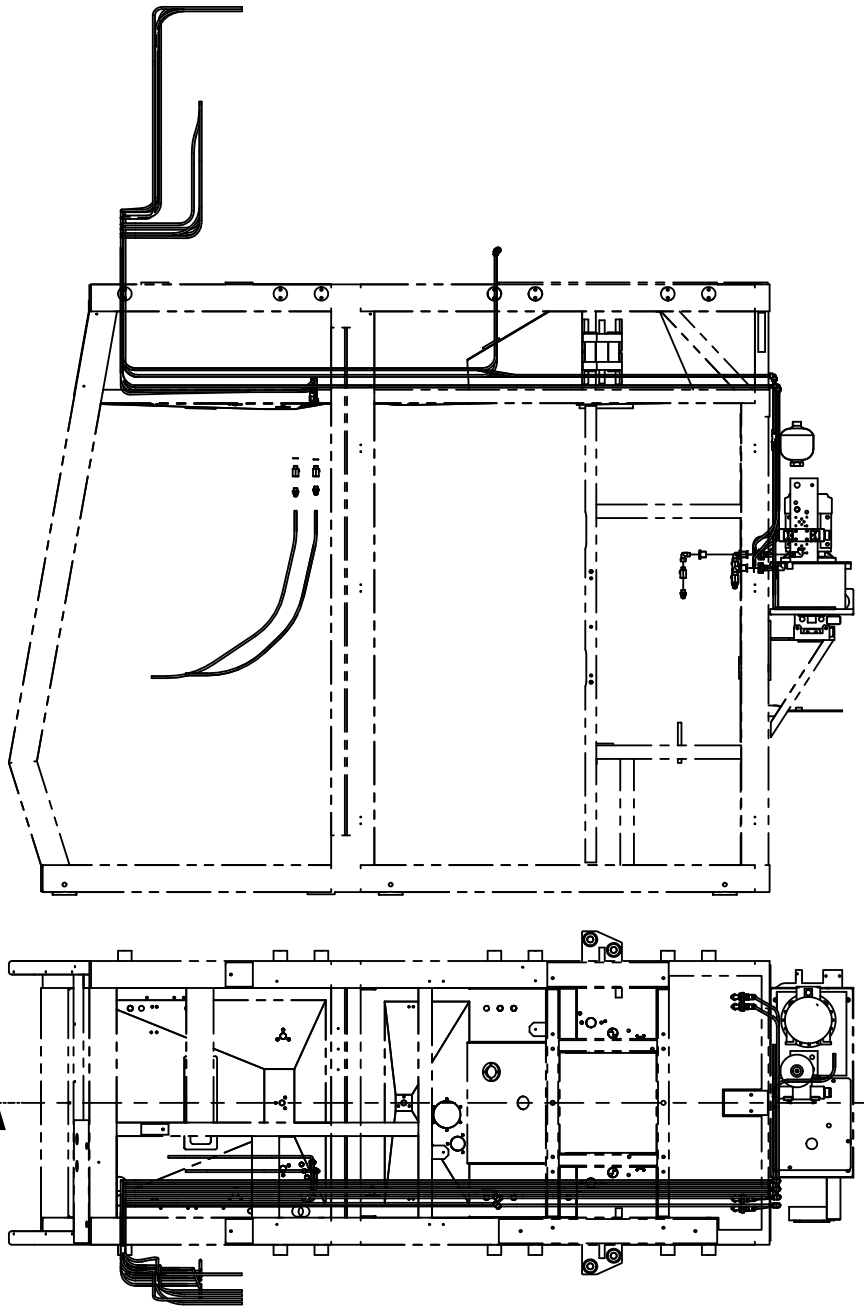

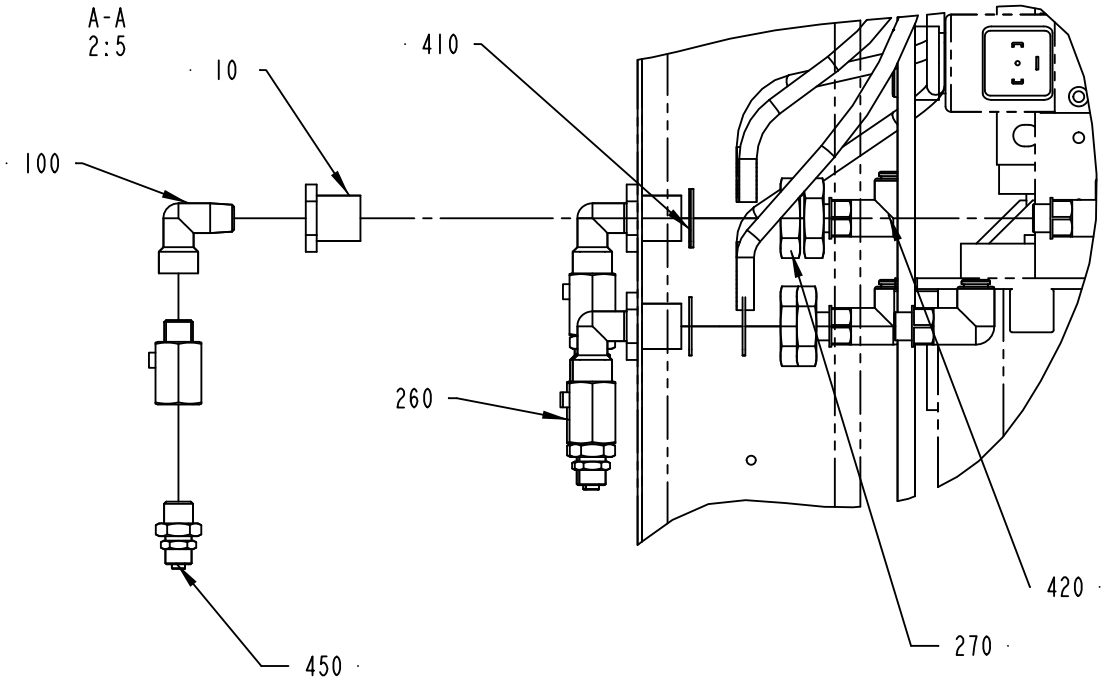

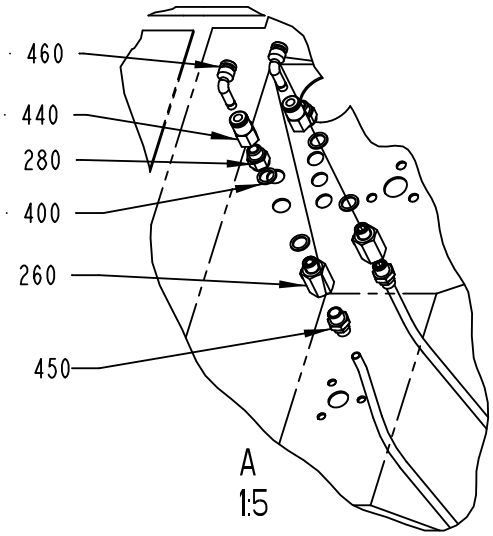

2514255-1
ECM 316502

ECM: 329208 - 20080401
Group number: 2514255-0100
Assembly Drawing: 2514255-1_2_AB

This list covers pages from 2-238 to 2-241

Pos	Part No	UN	Qty	Description	Page No
-					
010	276398-0000		4	HEXAGON NIPPLE	
100	90140-0013		4	ELBOW, 90 INT/EXT, 2020-1/4-1/4	
14021	90166-0118	MM	3300	TUBE 8 MM PA BLACK	
14022	90166-0118	MM	3900	TUBE 8 MM PA BLACK	
23201	90166-0118	MM	4400	TUBE 8 MM PA BLACK	
232011	90166-0118	MM	200	TUBE 8 MM PA BLACK	
232012	90166-0118	MM	1100	TUBE 8 MM PA BLACK	
23202	90166-0118	MM	4000	TUBE 8 MM PA BLACK	
232021	90166-0118	MM	200	TUBE 8 MM PA BLACK	
232022	90166-0118	MM	1300	TUBE 8 MM PA BLACK	
260	90600-0775		6	BALL VALVE G1/4, 406F-1/4"	
270	90330-0093		4	NUT, HEXAGON, G1/2	
280	90030-0166		2	NIPPLE,REDUCING G1/4"-G1/4"	
380	352113-0204		7	ANCHOR PLATES FOR STRIPS, TYPE TM3S25-M	
390	312125-0364		7	SCREW ISO 1207 M6X10 A4	
400	315237-0110		4	WASHER,PL.RND.AL.13,5/18,H=1,5	
410	315233-0113		4	WASHER CAPTIVE SEALING G1/2	
420	90055-0267		4	ELBOW PIPE JOINT,EXT.THREAD,D=8 MM G1/4	
430	90055-0269		8	ELBOW PIPE JOINT 8X8 MM	
43091	90166-0118	MM	4630	TUBE 8 MM PA BLACK	
430911	90166-0118	MM	650	TUBE 8 MM PA BLACK	
43092	90166-0118	MM	4000	TUBE 8 MM PA BLACK	
430921	90166-0118	MM	700	TUBE 8 MM PA BLACK	
43101	90166-0118	MM	5350	TUBE 8 MM PA BLACK	
431011	90166-0118	MM	650	TUBE 8 MM PA BLACK	
43102	90166-0118	MM	4800	TUBE 8 MM PA BLACK	
431021	90166-0118	MM	700	TUBE 8 MM PA BLACK	
440	90055-0266		2	STRAIGHT CONNECTION	
450	90055-0274		6	STRAIGHT COUPLING, D=8 MM - G1/4"	
460	90055-0204		2	ELBOW WITH TAILPIECE 8/8 MM LONG	
490	90459-0941		2	QUICK COUPLING, PLCD 130-M8	
500	90459-0960		2	QUICK COUPLING, PLCD 200-M8	
53051	90166-0118	MM	3370	TUBE 8 MM PA BLACK	
530511	90166-0118	MM	980	TUBE 8 MM PA BLACK	
53052	90166-0118	MM	2840	TUBE 8 MM PA BLACK	
530521	90166-0118	MM	940	TUBE 8 MM PA BLACK	

Pos	Part No	UN	Qty	Description	Page No

Machine Type | Group Description | Used-In | Group Number | Page No

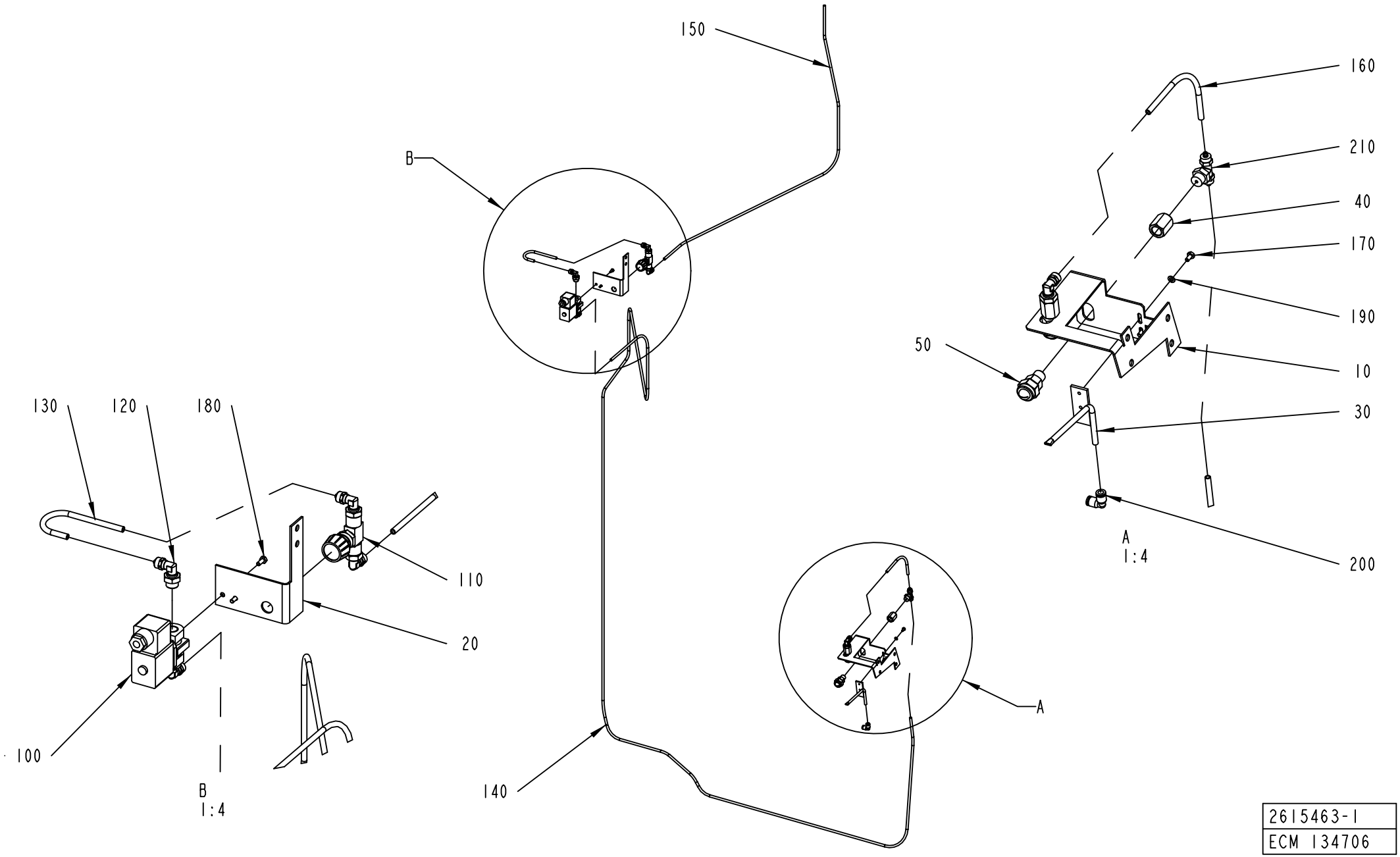

2615463-1
ECM 134706

ECM: 394166 - 20090420
Group number: 2615463-0100
Assembly Drawing: 2615463-1_1_AA

This list covers pages from 2-242 to 2-247

Pos	Part No	UN	Qty	Description	Page No
TBA 1000S LIGHTCAP (See drawing on page: 2-244)					
040	1523641-0000		1	SPACER	
050	1523645-0000		1	AIR NOZZLE	
120	90224-0329		5	ELBOW 90 COUPL.,EXT.THREAD 6/4-G1/4"	
140	90166-0266	MM	4000	TUBE 6 MM PA BLACK	
220	90600-1695		1	FLOW SWITCH 0,4 L/MIN, DW-K-A 0.4 L/MIN	
230	350001-0008		2	PUSH-IN FITTING QS-F-G1/4-6	
235	2863211-0000		1	PLATE	
240	1020637-0000		1	HOLDER	
250	2842918-0000		1	HOLDER	
260	2863210-0000		1	BLOCK	
275	2764404-0000		1	SPACER	
290	90459-7280		1	AIR NOZZLE, 011	
340	312105-0340		2	SCREW M6S ISO 4014 M5X45 A480	
350	350002-0007		1	PUSH-IN L-FITTING QSL-F-G1/8-8	
360	312105-0327		1	SCREW M6S ISO 4017 M5X12 A480	
370	312605-0314		2	HEXAGON NUT, M6M M5 A280	
380	315105-0146		5	WASHER BRB 5,3X10 RFR	
TBA 1000S STDA7, TBA 1000B STDA7 (See drawing on page: 2-242)					
010	2608273-0000		1	HOLDER	
030	2608274-0000		1	PIPE	
040	1523641-0000		2	SPACER	
050	1523645-0000		2	AIR NOZZLE	
120	90224-0329		5	ELBOW 90 COUPL.,EXT.THREAD 6/4-G1/4"	
140	90166-0266	MM	4000	TUBE 6 MM PA BLACK	
160	90166-0266	MM	200	TUBE 6 MM PA BLACK	
170	312105-0287		2	SCREW M6S ISO 4017 M4X8 A470	
190	315105-0136		2	WASHER BRB 4,3X8 RFR	
200	342735-0102		1	ELBOW PIPE JOINT	
210	342941-0114		1	T-COUPLING,EXT.THREAD 6/4-G1/4"	
TPA 500SQ LIGHTCAP (See drawing on page: 2-246)					
040	1523641-0000		1	SPACER	
050	1523645-0000		1	AIR NOZZLE	
120	90224-0329		5	ELBOW 90 COUPL.,EXT.THREAD 6/4-G1/4"	
140	90166-0266	MM	4000	TUBE 6 MM PA BLACK	
220	90600-1695		1	FLOW SWITCH 0,4 L/MIN, DW-K-A 0.4 L/MIN	
230	350001-0008		2	PUSH-IN FITTING QS-F-G1/4-6	
235	2959680-0000		1	DRAIN PLATE	
240	1020637-0000		1	HOLDER	
250	2959665-0000		1	HOLDER	
260	2863210-0000		1	BLOCK	
275	2764404-0000		1	SPACER	
290	90459-7280		1	AIR NOZZLE, 011	
340	312105-0340		2	SCREW M6S ISO 4014 M5X45 A480	
350	350002-0007		1	PUSH-IN L-FITTING QSL-F-G1/8-8	
360	312105-0327		1	SCREW M6S ISO 4017 M5X12 A480	
370	312605-0314		2	HEXAGON NUT, M6M M5 A280	
380	315105-0146		5	WASHER BRB 5,3X10 RFR	
Common Parts					
020	2609365-0000		1	HOLDER	
100	90042-0248		1	SOLENOID VALVE OFFICIENE DI ENSINO	
110	90187-0149		1	THROTTLE VALVE, G1/4, G1/4, MALE	
130	90166-0266	MM	200	TUBE 6 MM PA BLACK	
150	90166-0266	MM	1200	TUBE 6 MM PA BLACK	
180	312105-0289		2	SCREW M6S H4X10 A4 70 ISO4017/DIN933	

Machine Type | Group Description | Used-In | Group Number | Page No

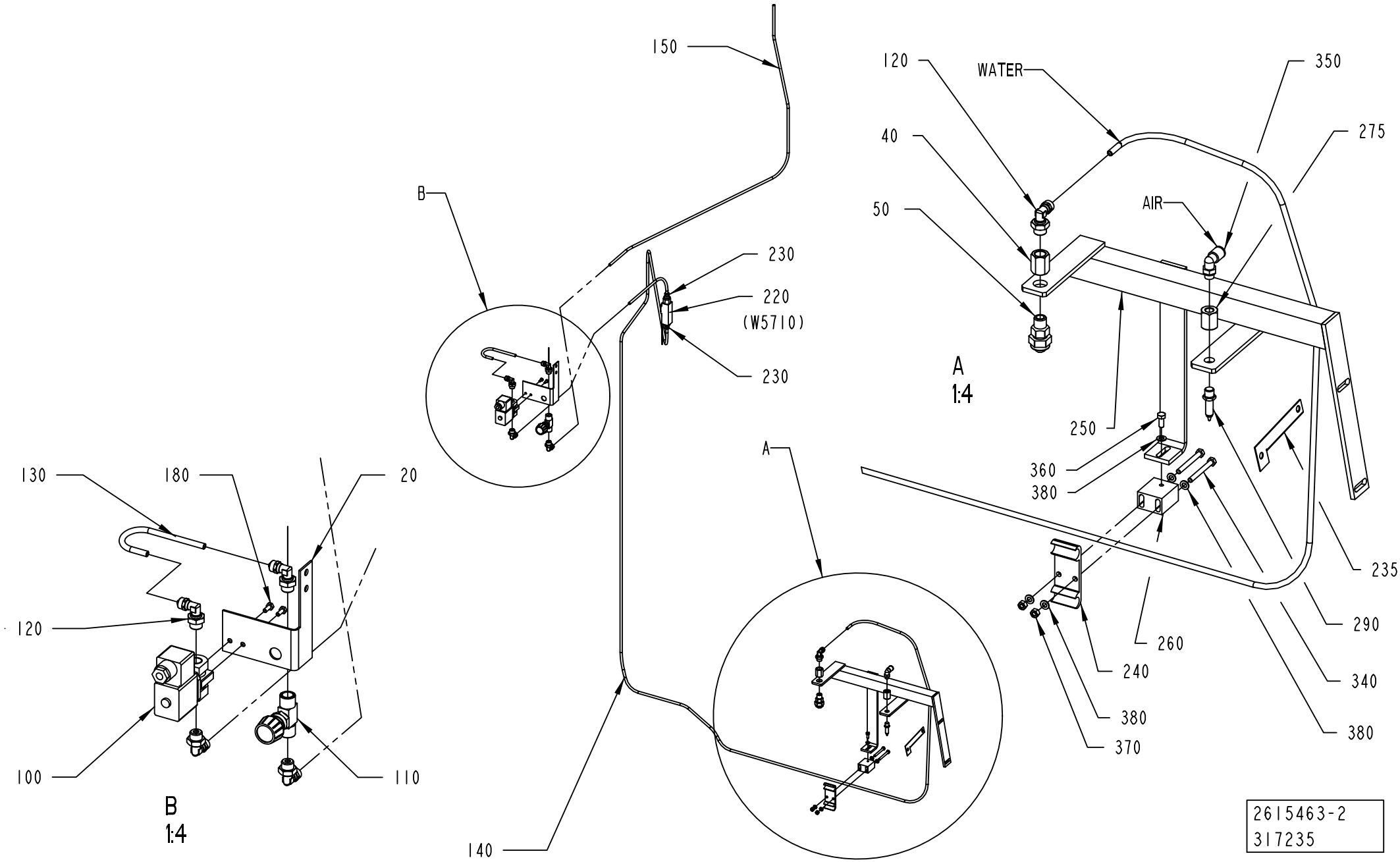
150
B
230
220
(W5710)
230
120
WATER
350
40
275
50
AIR
A
1:4
250
360
380
235
290
260
240
340
380
380
370
130
180
20
120
100
110
B
1:4
A
140
2615463-2
317235

ECM: 394166 - 20090420
Group number: 2615463-0100
Assembly Drawing: 2615463-2_1_AD

This list covers pages from 2-242 to 2-247

Pos	Part No	UN	Qty	Description	Page No
TBA 1000S LIGHTCAP (See drawing on page: 2-244)					
040	1523641-0000		1	SPACER	
050	1523645-0000		1	AIR NOZZLE	
120	90224-0329		5	ELBOW 90 COUPL.,EXT.THREAD 6/4-G1/4"	
140	90166-0266	MM	4000	TUBE 6 MM PA BLACK	
220	90600-1695		1	FLOW SWITCH 0,4 L/MIN, DW-K-A 0.4 L/MIN	
230	350001-0008		2	PUSH-IN FITTING QS-F-G1/4-6	
235	2863211-0000		1	PLATE	
240	1020637-0000		1	HOLDER	
250	2842918-0000		1	HOLDER	
260	2863210-0000		1	BLOCK	
275	2764404-0000		1	SPACER	
290	90459-7280		1	AIR NOZZLE, 011	
340	312105-0340		2	SCREW M6S ISO 4014 M5X45 A480	
350	350002-0007		1	PUSH-IN L-FITTING QSL-F-G1/8-8	
360	312105-0327		1	SCREW M6S ISO 4017 M5X12 A480	
370	312605-0314		2	HEXAGON NUT, M6M M5 A280	
380	315105-0146		5	WASHER BRB 5,3X10 RFR	
TBA 1000S STDA7, TBA 1000B STDA7 (See drawing on page: 2-242)					
010	2608273-0000		1	HOLDER	
030	2608274-0000		1	PIPE	
040	1523641-0000		2	SPACER	
050	1523645-0000		2	AIR NOZZLE	
120	90224-0329		5	ELBOW 90 COUPL.,EXT.THREAD 6/4-G1/4"	
140	90166-0266	MM	4000	TUBE 6 MM PA BLACK	
160	90166-0266	MM	200	TUBE 6 MM PA BLACK	
170	312105-0287		2	SCREW M6S ISO 4017 M4X8 A470	
190	315105-0136		2	WASHER BRB 4,3X8 RFR	
200	342735-0102		1	ELBOW PIPE JOINT	
210	342941-0114		1	T-COUPLING,EXT.THREAD 6/4-G1/4"	
TPA 500SQ LIGHTCAP (See drawing on page: 2-246)					
040	1523641-0000		1	SPACER	
050	1523645-0000		1	AIR NOZZLE	
120	90224-0329		5	ELBOW 90 COUPL.,EXT.THREAD 6/4-G1/4"	
140	90166-0266	MM	4000	TUBE 6 MM PA BLACK	
220	90600-1695		1	FLOW SWITCH 0,4 L/MIN, DW-K-A 0.4 L/MIN	
230	350001-0008		2	PUSH-IN FITTING QS-F-G1/4-6	
235	2959680-0000		1	DRAIN PLATE	
240	1020637-0000		1	HOLDER	
250	2959665-0000		1	HOLDER	
260	2863210-0000		1	BLOCK	
275	2764404-0000		1	SPACER	
290	90459-7280		1	AIR NOZZLE, 011	
340	312105-0340		2	SCREW M6S ISO 4014 M5X45 A480	
350	350002-0007		1	PUSH-IN L-FITTING QSL-F-G1/8-8	
360	312105-0327		1	SCREW M6S ISO 4017 M5X12 A480	
370	312605-0314		2	HEXAGON NUT, M6M M5 A280	
380	315105-0146		5	WASHER BRB 5,3X10 RFR	
Common Parts					
020	2609365-0000		1	HOLDER	
100	90042-0248		1	SOLENOID VALVE OFFICIENE DI ENSINO	
110	90187-0149		1	THROTTLE VALVE, G1/4, G1/4, MALE	
130	90166-0266	MM	200	TUBE 6 MM PA BLACK	
150	90166-0266	MM	1200	TUBE 6 MM PA BLACK	
180	312105-0289		2	SCREW M6S H4X10 A4 70 ISO4017/DIN933	

Machine Type | Group Description | Used-In | Group Number | Page No

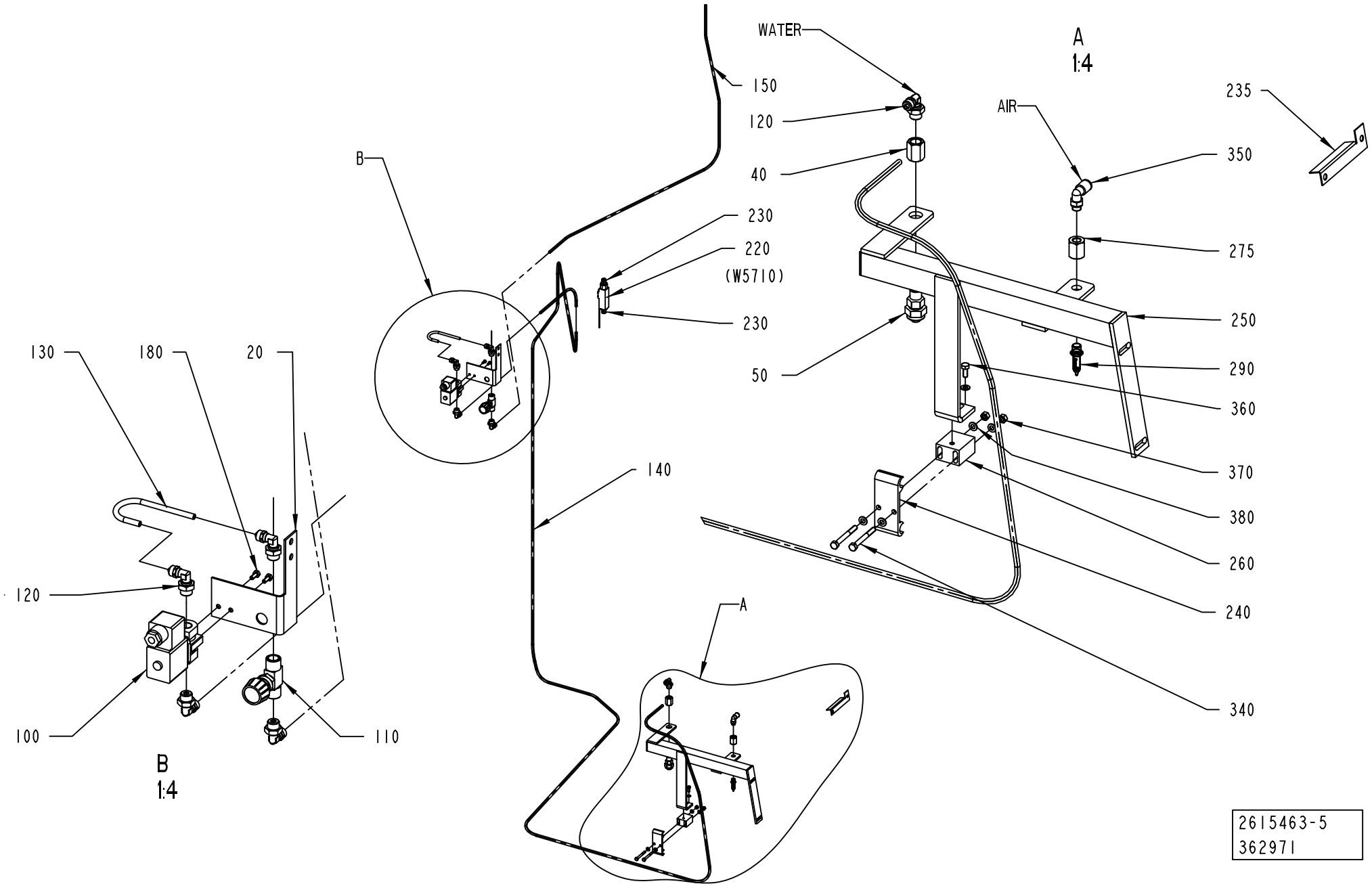
WATER
AIR
150
120
40
230
220
(W5710)
230
50
140
235
350
275
250
290
360
370
380
260
240
340
130
180
20
120
100
110
B
1:4
A
1:4
2615463-5
362971

ECM: 394166 - 20090420
Group number: 2615463-0100
Assembly Drawing: 2615463-5_1_AA

This list covers pages from 2-242 to 2-247

Pos	Part No	UN	Qty	Description	Page No
TBA 1000S LIGHTCAP (See drawing on page: 2-244)					
040	1523641-0000		1	SPACER	
050	1523645-0000		1	AIR NOZZLE	
120	90224-0329		5	ELBOW 90 COUPL.,EXT.THREAD 6/4-G1/4"	
140	90166-0266	MM	4000	TUBE 6 MM PA BLACK	
220	90600-1695		1	FLOW SWITCH 0,4 L/MIN, DW-K-A 0.4 L/MIN	
230	350001-0008		2	PUSH-IN FITTING QS-F-G1/4-6	
235	2863211-0000		1	PLATE	
240	1020637-0000		1	HOLDER	
250	2842918-0000		1	HOLDER	
260	2863210-0000		1	BLOCK	
275	2764404-0000		1	SPACER	
290	90459-7280		1	AIR NOZZLE, 011	
340	312105-0340		2	SCREW M6S ISO 4014 M5X45 A480	
350	350002-0007		1	PUSH-IN L-FITTING QSL-F-G1/8-8	
360	312105-0327		1	SCREW M6S ISO 4017 M5X12 A480	
370	312605-0314		2	HEXAGON NUT, M6M M5 A280	
380	315105-0146		5	WASHER BRB 5,3X10 RFR	
TBA 1000S STDA7, TBA 1000B STDA7 (See drawing on page: 2-242)					
010	2608273-0000		1	HOLDER	
030	2608274-0000		1	PIPE	
040	1523641-0000		2	SPACER	
050	1523645-0000		2	AIR NOZZLE	
120	90224-0329		5	ELBOW 90 COUPL.,EXT.THREAD 6/4-G1/4"	
140	90166-0266	MM	4000	TUBE 6 MM PA BLACK	
160	90166-0266	MM	200	TUBE 6 MM PA BLACK	
170	312105-0287		2	SCREW M6S ISO 4017 M4X8 A470	
190	315105-0136		2	WASHER BRB 4,3X8 RFR	
200	342735-0102		1	ELBOW PIPE JOINT	
210	342941-0114		1	T-COUPLING,EXT.THREAD 6/4-G1/4"	
TPA 500SQ LIGHTCAP (See drawing on page: 2-246)					
040	1523641-0000		1	SPACER	
050	1523645-0000		1	AIR NOZZLE	
120	90224-0329		5	ELBOW 90 COUPL.,EXT.THREAD 6/4-G1/4"	
140	90166-0266	MM	4000	TUBE 6 MM PA BLACK	
220	90600-1695		1	FLOW SWITCH 0,4 L/MIN, DW-K-A 0.4 L/MIN	
230	350001-0008		2	PUSH-IN FITTING QS-F-G1/4-6	
235	2959680-0000		1	DRAIN PLATE	
240	1020637-0000		1	HOLDER	
250	2959665-0000		1	HOLDER	
260	2863210-0000		1	BLOCK	
275	2764404-0000		1	SPACER	

Pos	Part No	UN	Qty	Description	Page No
290	90459-7280		1	AIR NOZZLE, 011	
340	312105-0340		2	SCREW M6S ISO 4014 M5X45 A480	
350	350002-0007		1	PUSH-IN L-FITTING QSL-F-G1/8-8	
360	312105-0327		1	SCREW M6S ISO 4017 M5X12 A480	
370	312605-0314		2	HEXAGON NUT, M6M M5 A280	
380	315105-0146		5	WASHER BRB 5,3X10 RFR	
Common Parts					
020	2609365-0000		1	HOLDER	
100	90042-0248		1	SOLENOID VALVE OFFICIENE DI ENSINO	
110	90187-0149		1	THROTTLE VALVE, G1/4, G1/4, MALE	
130	90166-0266	MM	200	TUBE 6 MM PA BLACK	
150	90166-0266	MM	1200	TUBE 6 MM PA BLACK	
180	312105-0289		2	SCREW M6S H4X10 A4 70 ISO4017/DIN933	

Machine Type | Group Description | Used-In | Group Number | Page No

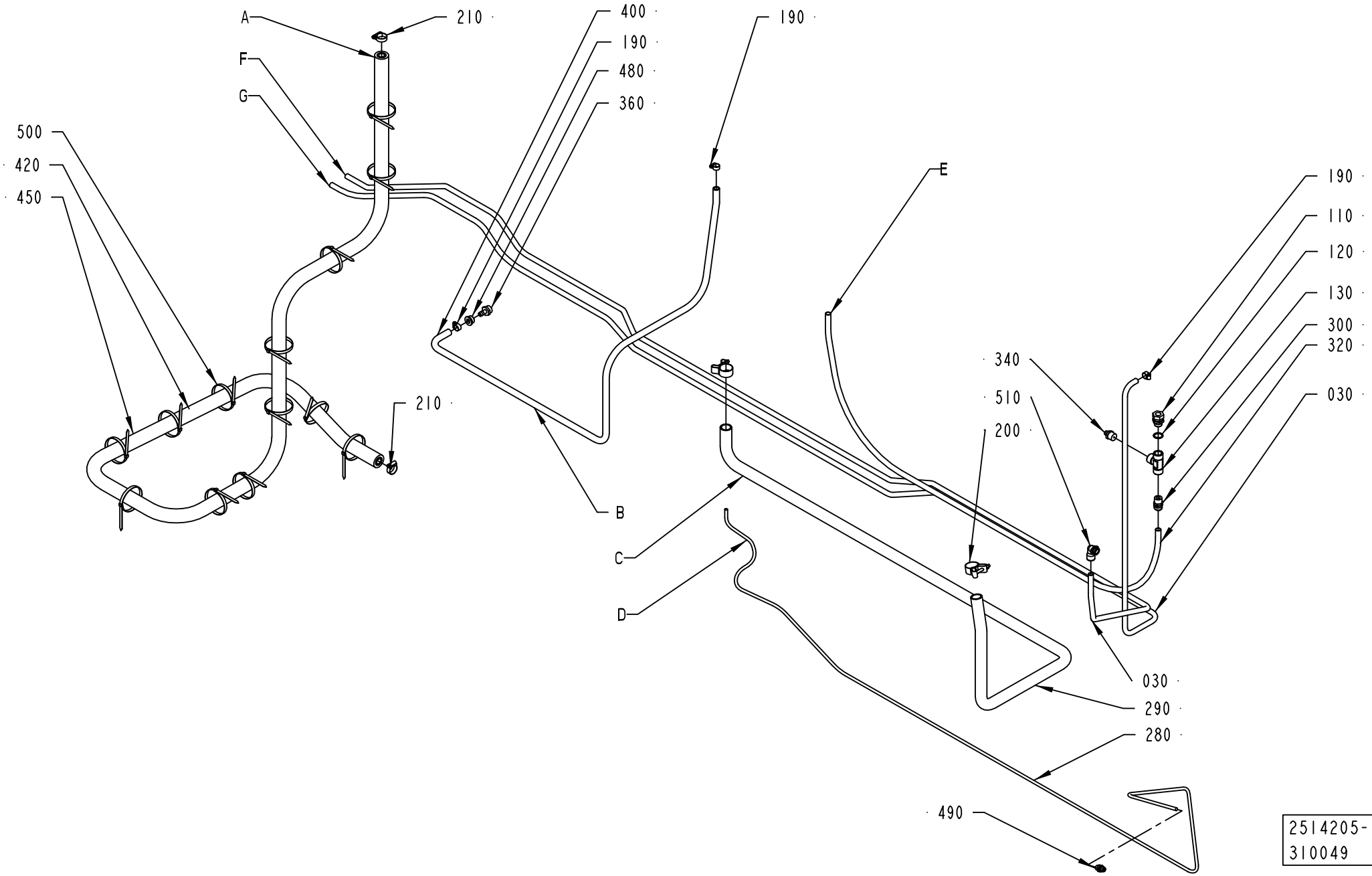
A
210
F
G
400
190
480
360
190
500
420
450
210
E
190
110
120
130
300
320
030
340
510
200
B
C
D
030
290
280
490
2514205-1
310049

ECM: 310093 - 20071001
Group number: 2514205-0100
Assembly Drawing: 2514205-1_1_AF

Pos	Part No	UN	Qty	Description	Page No
A3/FLEX					
200	90459-2366		2	HOSE CLIP, (32)-35	
290	90166-0049	MM	2500	HOSE PVC 25/33-34	
Common Parts					
030	90459-3164	MM	5000	TUBE 14MM PA BLACK	
110	342720-0114		1	CONN. STR. GA-15-G1/2	
120	315239-0113		1	NYLON WASHER G1/2, 1/2RRP	
130	90140-0010		1	T-PIPE, INT. THREAD, 20031/2	
190	342991-0101		3	HOSE CLIP,WORM DRIVE TYPE (13)-16	
210	342991-0104		2	HOSE CLIP,WORM DRIVE TYPE (23)-27	
280	90166-0013	MM	5000	TUBE 8 MM PA BLUE	
300	342920-0151		1	STRAIGHT COUPL.,EXT.THREAD.15/12,5-R1/2"	
320	90166-0110	MM	2200	TUBE 15 MM PA,TRANSP.	
340	342920-0116		1	STRAIGHT COUPLING,EXT.THREADED 6/4-R1/2"	
360	342901-0105		1	HOSE NIPPLE, EXT.THR. R1/2-12 MM	
400	90166-0121	MM	1850	HOSE	
410	90166-0260	MM	3300	HOSE	
450	90411-0020	MM	3300	INSULATING TUBE	
480	342713-0213		1	PLUG, EXT THREAD HEX SOCKET 8638-00-120	
490	342921-0122		1	STRAIGHT COUPLING,EXT.THREADED 8/6-G1/4"	
500	352113-0104		13	CABLE TIE, BLACK 300X4,8 MM	

Pos	Part No	UN	Qty	Description	Page No

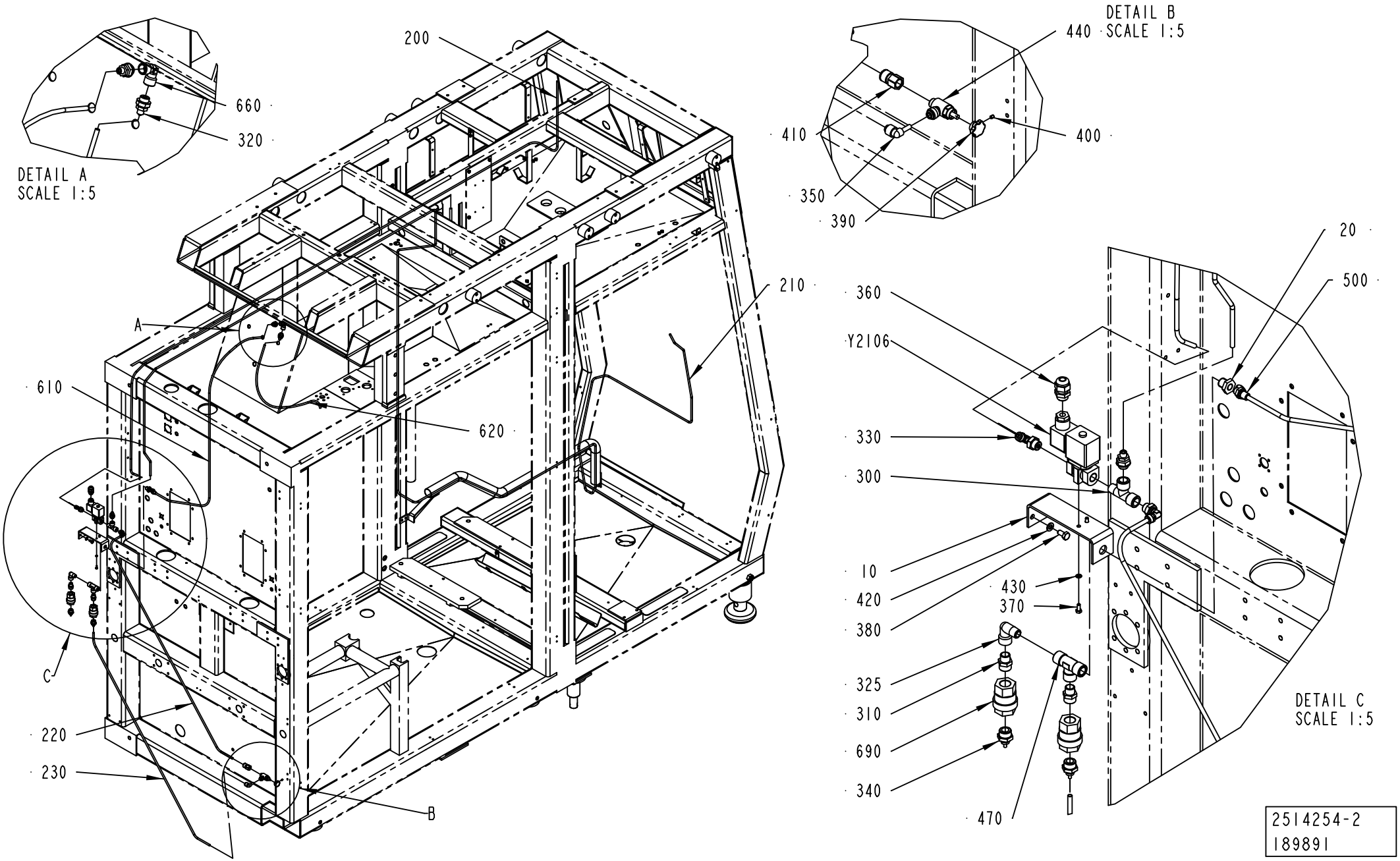
DETAIL A
SCALE 1:5
660
320
200
210
A
610
620
C
220
230
B
DETAIL B
SCALE 1:5
440
410
400
350
390
20
500
360
Y2106
330
300
10
420
380
430
370
325
310
690
340
470
DETAIL C
SCALE 1:5
2514254-2
189891

ECM: 340463 - 20080403
Group number: 2514254-0100
Assembly Drawing: 2514254-2_1_AA

This list covers pages from 2-250 to 2-253

Pos	Part No	UN	Qty	Description	Page No
A3/FLEX TBA, A3/FLEX TPA (See drawing on page: 2-250)					
010	2721151-0000		1	CANTILEVER	
020	532413-0000		1	REDUCING NIPPLE	
200	90166-0132	MM	3400	TUBE 6 MM PA,TRANSP.	
210	90166-0132	MM	6630	TUBE 6 MM PA,TRANSP.	
230	90166-0132	MM	1200	TUBE 6 MM PA,TRANSP.	
260	90002-0013		1	BLANK-OFF PLUG, PR 15,2 SKINDICHT-BLK9	
270	90099-0104		1	NUT, PR 15,2 (PG9)	
300	342245-0102		1	T-PIPE, INT. THREAD, R1/4XKR1/4	
310	342700-0203		2	NIPPLES,HEXAGON,EXT.G-THREAD G3/8"-G1/4"	
320	342921-0114		4	STRAIGHT COUPLING,EXT.THREADED 6/4-G1/4"	
330	90224-0329		2	ELBOW 90 COUPL.,EXT.THREAD 6/4-G1/4"	
340	342921-0115		2	STRAIGHT COUPLING,EXT.THREADED 6/4-G3/8"	
350	90055-0268		1	ELBOW WITH TAILPIECE 6/6 MM	
390	2710507-0000		1	KNOB	
400	90459-5076		1	SET SCREW ISO4026 M4X5 HRC 45	
410	90459-5471		1	STRAIGHT COUPLING INT, D=6 MM - G1/4	
440	90459-5472		1	FLOW CONTROL VALVE, CFM360612E	
470	90140-0018		1	T-PIPE, INT. THREAD, 2003-1/4	
500	342921-0113		1	STRAIGHT COUPLING,EXT.THREADED 6/4-G1/8"	
610	90166-0132	MM	1200	TUBE 6 MM PA,TRANSP.	
690	90230-0028		2	NON-RETURN VALVE H 151 R 3/8"	
A3/FLEX TGA (See drawing on page: 2-252)					
010	2721151-0000		1	CANTILEVER	
020	532413-0000		1	REDUCING NIPPLE	
200	90166-0132	MM	3800	TUBE 6 MM PA,TRANSP.	
230	90166-0132	MM	1200	TUBE 6 MM PA,TRANSP.	
240	90166-0132	MM	1200	TUBE 6 MM PA,TRANSP.	
250	90166-0132	MM	1200	TUBE 6 MM PA,TRANSP.	
260	90015-0020		1	LEAD-IN, TET5-7, E-1458016	
300	342245-0102		1	T-PIPE, INT. THREAD, R1/4XKR1/4	
310	342700-0203		2	NIPPLES,HEXAGON,EXT.G-THREAD G3/8"-G1/4"	
320	342921-0114		4	STRAIGHT COUPLING,EXT.THREADED 6/4-G1/4"	
330	90224-0329		2	ELBOW 90 COUPL.,EXT.THREAD 6/4-G1/4"	
340	342921-0115		2	STRAIGHT COUPLING,EXT.THREADED 6/4-G3/8"	
350	90055-0268		2	ELBOW WITH TAILPIECE 6/6 MM	
390	2710507-0000		2	KNOB	
400	90459-5076		2	SET SCREW ISO4026 M4X5 HRC 45	
410	90459-5471		2	STRAIGHT COUPLING INT, D=6 MM - G1/4	
440	90459-5472		2	FLOW CONTROL VALVE, CFM360612E	
470	90140-0018		1	T-PIPE, INT. THREAD, 2003-1/4	
500	342921-0113		1	STRAIGHT COUPLING,EXT.THREADED 6/4-G1/8"	
610	90166-0132	MM	1200	TUBE 6 MM PA,TRANSP.	
690	90230-0028		2	NON-RETURN VALVE H 151 R 3/8"	
Common Parts					
220	90166-0132	MM	1200	TUBE 6 MM PA,TRANSP.	
325	90140-0013		1	ELBOW, 90 INT/EXT, 2020-1/4-1/4	
360	352103-0101		1	CABLE GLAND, ST 9, PR15,2/PG9	
370	312105-0289		2	SCREW M6S H4X10 A4 70 ISO4017/DIN933	
380	312105-0366		2	SCREW M6S ISO 4017 M6X12 A480	
420	315105-0153		2	WASHER BRB 6,4X12 RFR	
430	315105-0136		2	WASHER BRB 4,3X8 RFR	
620	90166-0132	MM	1000	TUBE 6 MM PA,TRANSP.	
660	90140-0019		1	ELBOW, 90, INT. THREAD, NO. 2013-1/4	
Y2106	90042-0248		1	SOLENOID VALVE OFFICIENE DI ENSINO	

Machine Type	Group Description	Used-In	Group Number	Page No

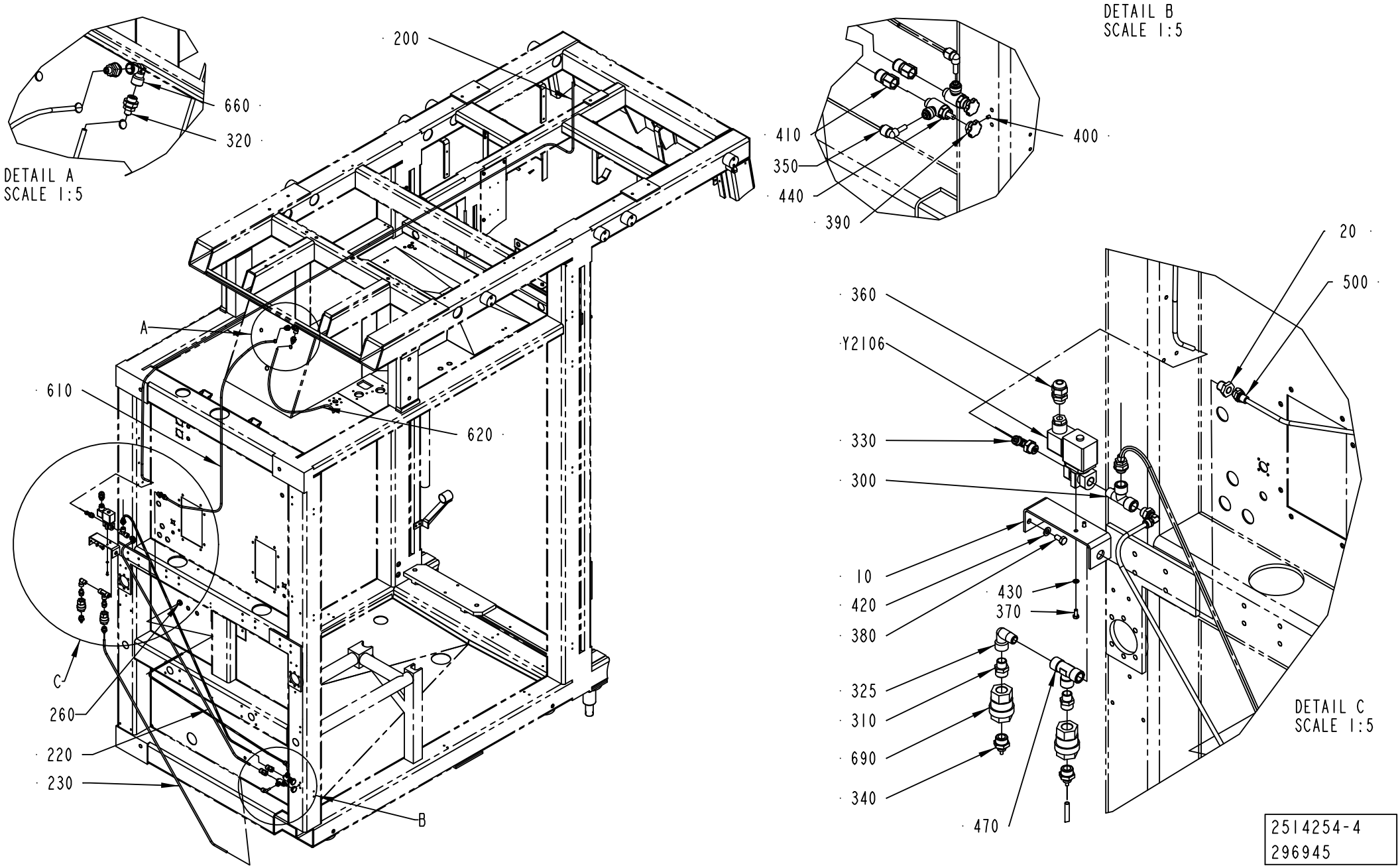
DETAIL A
SCALE 1:5
660
320
200
A
610
620
C
260
220
230
B
DETAIL B
SCALE 1:5
410
350
440
390
400
20
500
360
Y2106
330
300
10
420
380
325
310
690
340
430
370
470
DETAIL C
SCALE 1:5
2514254-4
296945

ECM: 340463 - 20080403
Group number: 2514254-0100
Assembly Drawing: 2514254-4_1_AA

This list covers pages from 2-250 to 2-253

Pos	Part No	UN	Qty	Description	Page No
A3/FLEX TBA, A3/FLEX TPA (See drawing on page: 2-250)					
010	2721151-0000		1	CANTILEVER	
020	532413-0000		1	REDUCING NIPPLE	
200	90166-0132	MM	3400	TUBE 6 MM PA,TRANSP.	
210	90166-0132	MM	6630	TUBE 6 MM PA,TRANSP.	
230	90166-0132	MM	1200	TUBE 6 MM PA,TRANSP.	
260	90002-0013		1	BLANK-OFF PLUG, PR 15,2 SKINDICHT-BLK9	
270	90099-0104		1	NUT, PR 15,2 (PG9)	
300	342245-0102		1	T-PIPE, INT. THREAD, R1/4XKR1/4	
310	342700-0203		2	NIPPLES,HEXAGON,EXT.G-THREAD G3/8"-G1/4"	
320	342921-0114		4	STRAIGHT COUPLING,EXT.THREADED 6/4-G1/4"	
330	90224-0329		2	ELBOW 90 COUPL.,EXT.THREAD 6/4-G1/4"	
340	342921-0115		2	STRAIGHT COUPLING,EXT.THREADED 6/4-G3/8"	
350	90055-0268		1	ELBOW WITH TAILPIECE 6/6 MM	
390	2710507-0000		1	KNOB	
400	90459-5076		1	SET SCREW ISO4026 M4X5 HRC 45	
410	90459-5471		1	STRAIGHT COUPLING INT, D=6 MM - G1/4	
440	90459-5472		1	FLOW CONTROL VALVE, CFM360612E	
470	90140-0018		1	T-PIPE, INT. THREAD, 2003-1/4	
500	342921-0113		1	STRAIGHT COUPLING,EXT.THREADED 6/4-G1/8"	
610	90166-0132	MM	1200	TUBE 6 MM PA,TRANSP.	
690	90230-0028		2	NON-RETURN VALVE H 151 R 3/8"	
A3/FLEX TGA (See drawing on page: 2-252)					
010	2721151-0000		1	CANTILEVER	
020	532413-0000		1	REDUCING NIPPLE	
200	90166-0132	MM	3800	TUBE 6 MM PA,TRANSP.	
230	90166-0132	MM	1200	TUBE 6 MM PA,TRANSP.	
240	90166-0132	MM	1200	TUBE 6 MM PA,TRANSP.	
250	90166-0132	MM	1200	TUBE 6 MM PA,TRANSP.	
260	90015-0020		1	LEAD-IN, TET5-7, E-1458016	
300	342245-0102		1	T-PIPE, INT. THREAD, R1/4XKR1/4	
310	342700-0203		2	NIPPLES,HEXAGON,EXT.G-THREAD G3/8"-G1/4"	
320	342921-0114		4	STRAIGHT COUPLING,EXT.THREADED 6/4-G1/4"	
330	90224-0329		2	ELBOW 90 COUPL.,EXT.THREAD 6/4-G1/4"	
340	342921-0115		2	STRAIGHT COUPLING,EXT.THREADED 6/4-G3/8"	
350	90055-0268		2	ELBOW WITH TAILPIECE 6/6 MM	
390	2710507-0000		2	KNOB	
400	90459-5076		2	SET SCREW ISO4026 M4X5 HRC 45	
410	90459-5471		2	STRAIGHT COUPLING INT, D=6 MM - G1/4	
440	90459-5472		2	FLOW CONTROL VALVE, CFM360612E	
470	90140-0018		1	T-PIPE, INT. THREAD, 2003-1/4	
500	342921-0113		1	STRAIGHT COUPLING,EXT.THREADED 6/4-G1/8"	
610	90166-0132	MM	1200	TUBE 6 MM PA,TRANSP.	
690	90230-0028		2	NON-RETURN VALVE H 151 R 3/8"	
Common Parts					
220	90166-0132	MM	1200	TUBE 6 MM PA,TRANSP.	
325	90140-0013		1	ELBOW, 90 INT/EXT, 2020-1/4-1/4	
360	352103-0101		1	CABLE GLAND, ST 9, PR15,2/PG9	
370	312105-0289		2	SCREW M6S H4X10 A4 70 ISO4017/DIN933	
380	312105-0366		2	SCREW M6S ISO 4017 M6X12 A480	
420	315105-0153		2	WASHER BRB 6,4X12 RFR	
430	315105-0136		2	WASHER BRB 4,3X8 RFR	
620	90166-0132	MM	1000	TUBE 6 MM PA,TRANSP.	
660	90140-0019		1	ELBOW, 90, INT. THREAD, NO. 2013-1/4	
Y2106	90042-0248		1	SOLENOID VALVE OFFICIENE DI ENSINO	

Machine Type	Group Description	Used-In	Group Number	Page No

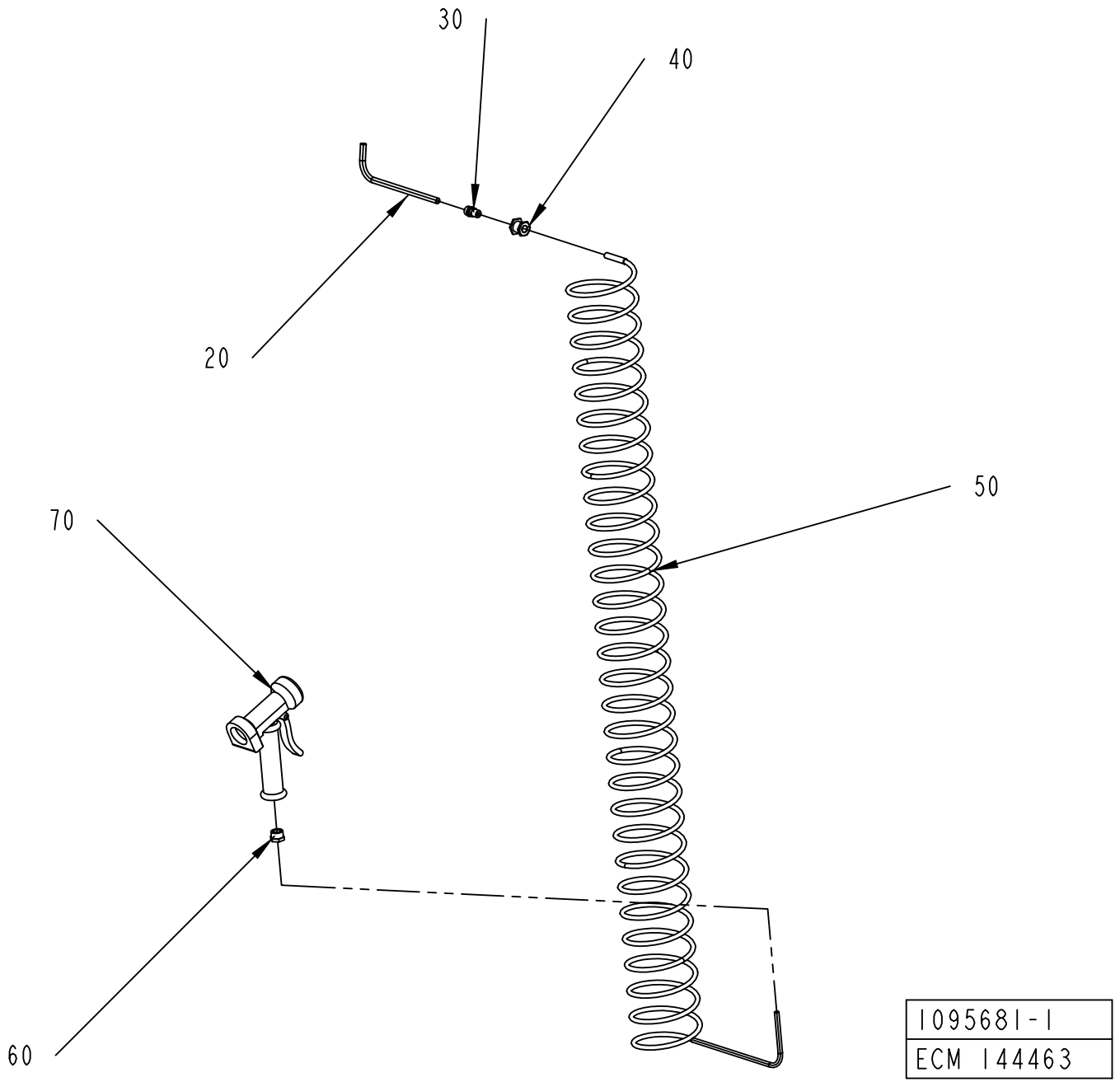
30
40
20
50
70
60
1095681-1
ECM 144463

ECM: 189878 - 20041104
Group number: 1095681-0100
Assembly Drawing: 1095681-1_1_AB

Pos	Part No	UN	Qty	Description	Page No
-					
020	90166-0141	MM	1600	TUBE 10 MM PA,TRANSP. MIN.50M	
030	342920-0132		1	STRAIGHT COUPL.,EXT.THREADED 10/8-R1/4"	
040	342767-0104		1	CONN. BULKHEAD G1/4	
050	90152-0017		1	HOSE (SPIRAL)	
060	342701-0205		1	BUSHING,INT./EXT.G-THREAD G1/2"-G1/4"	
070	90426-0003		1	HAND SHOWER	

Pos	Part No	UN	Qty	Description	Page No

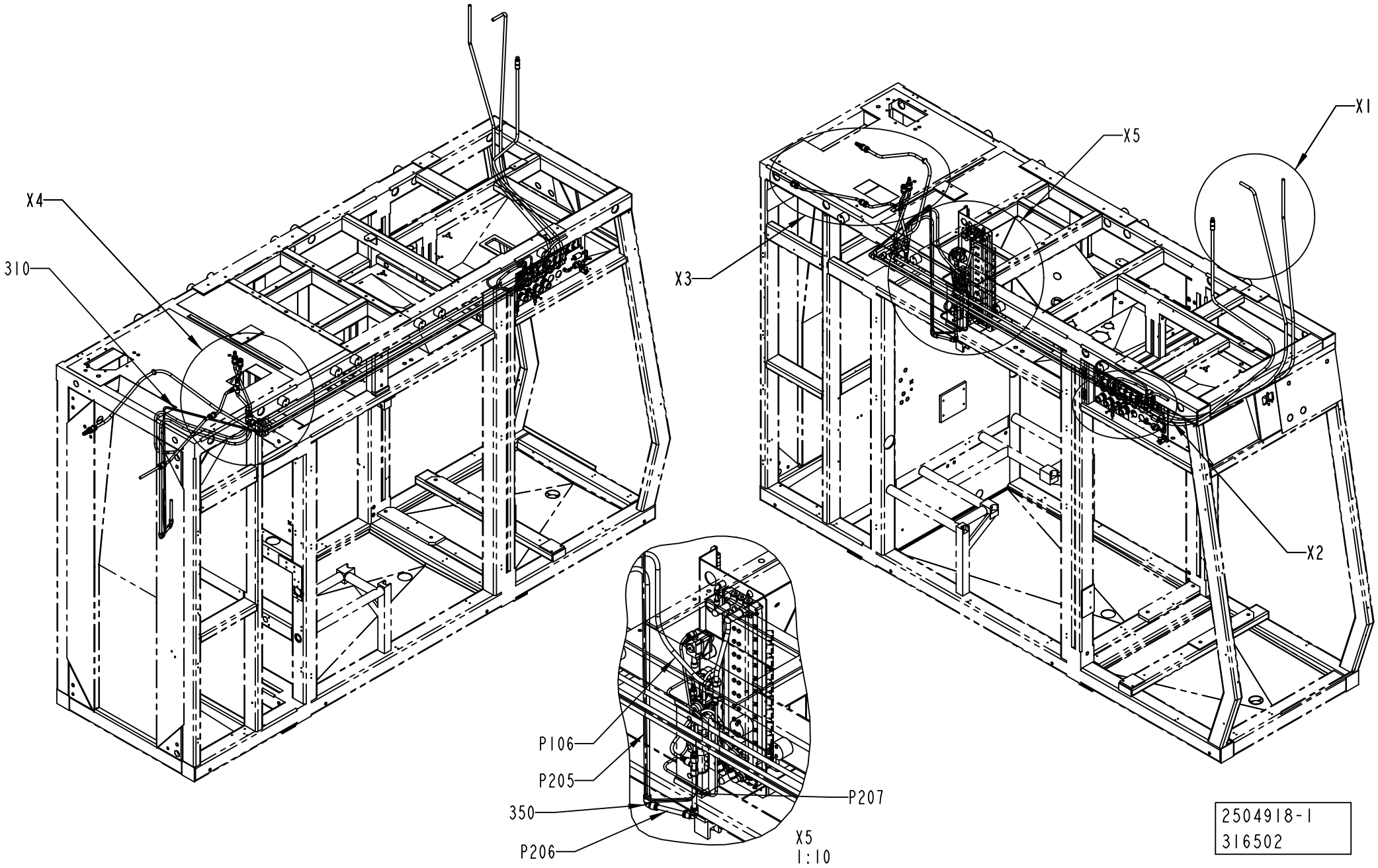
X4
310
X3
X5
X1
X2
P106
P205
350
P206
P207
X5
1:10
2504918-1
316502

ECM: 327679 - 20080401
Group number: 2504918-0100
Assembly Drawing: 2504918-1_1_AE

This list covers pages from 2-256 to 2-259

Pos	Part No	UN	Qty	Description	Page No
A3/FLEX TBA NOQC, A3/FLEX TPA NOQC, A3/FLEX TGA QC (See drawing on pages: 2-256, 2-258)					
300	342715-0106		1	BLIND PLUG 14 MM	
305	342715-0105		1	BLIND PLUG 12 MM	
315	350013-0001		1	PLUG QSC-4H	
325	350013-0003		1	PLUG QSC-8H	
335	90459-1605		1	REDUCER 4-8	
340	342716-0211		8	REDUCER 12-14	
360	342735-0110		3	ELBOW PIPE	
P103	90166-0196	MM	2350	TUBE 14MM PA BLUE	
P104	90166-0196	MM	120	TUBE 14MM PA BLUE	
P1ASU3	90166-0195	MM	3200	TUBE 12 MM PA BLUE	
P203	90166-0196	MM	2400	TUBE 14MM PA BLUE	
P204	90166-0195	MM	120	TUBE 12 MM PA BLUE	
P2PTDIMC	90166-0196	MM	4800	TUBE 14MM PA BLUE	
P2PTDIMC1	90166-0196	MM	1440	TUBE 14MM PA BLUE	
A3/FLEX TBA QC, A3/FLEX TPA QC (See drawing on pages: 2-256, 2-258)					
300	342715-0106		1	BLIND PLUG 14 MM	
305	342715-0105		1	BLIND PLUG 12 MM	
335	90459-1605		1	REDUCER 4-8	
340	342716-0211		8	REDUCER 12-14	
360	342735-0110		3	ELBOW PIPE	
P103	90166-0196	MM	2350	TUBE 14MM PA BLUE	
P104	90166-0196	MM	120	TUBE 14MM PA BLUE	
P1ASU3	90166-0195	MM	3200	TUBE 12 MM PA BLUE	
P203	90166-0196	MM	2400	TUBE 14MM PA BLUE	
P204	90166-0195	MM	120	TUBE 12 MM PA BLUE	
P2PTDIMC	90166-0196	MM	4800	TUBE 14MM PA BLUE	
P2PTDIMC1	90166-0196	MM	1440	TUBE 14MM PA BLUE	
Common Parts					
310	90166-0013	MM	6000	TUBE 8 MM PA BLUE	
320	342748-0103		1	T-CONNECTION 8MM	
330	342716-0209		2	REDUCER 8-12	
345	342728-0110		1	PIPE COUPLING 14 MM	
350	342735-0109		2	ELBOW PIPE JOINT	
440	342748-0110		5	T-CONNECTION 14MM	
500	90015-0021		1	LEAD-IN, TET10-14, E-1458023	
760	90458-2602		4	BULKHEAD CONNECTOR, 12 MM	
765	342768-0110		1	BULKHEAD CONNECTOR, 14 MM	
770	90055-0277		1	ELBOW WITH TAILPIECE 12/12 MM	
780	90157-0034		1	THREAD SEALANT LOCTITE 572 50 ML	
790	359000-0500		16	WIRE MARKING, YELLOW, PA3/6"0"	
800	359000-0501		16	WIRE MARKING, YELLOW, PA3/6"1"	
810	359000-0502		14	WIRE MARKING, YELLOW, PA3/6"2"	
820	359000-0503		4	WIRE MARKING, YELLOW, PA3/6"3"	
830	359000-0504		4	WIRE MARKING, YELLOW, PA3/6"4"	
840	359000-0505		4	WIRE MARKING, YELLOW, PA3/6"5"	
850	359000-0506		4	WIRE MARKING, YELLOW, PA3/6"6"	
860	359000-0507		2	WIRE MARKING, YELLOW, PA3/6"7"	
870	359000-0800		4	WIRE MARKING, YELLOW, PA3/6"A"	
880	359000-0802		4	WIRE MARKING, YELLOW, PA3/6"C"	
890	359000-0803		4	WIRE MARKING, YELLOW, PA3/6"D"	
900	359000-0808		4	WIRE MARKING, YELLOW, PA3/6"I"	
910	359000-0812		4	WIRE MARKING, YELLOW, PA3/6"M"	
920	359000-0815		30	WIRE MARKING, YELLOW, PA3/6"P"	
930	359000-0818		8	WIRE MARKING, YELLOW, PA3/6"S"	
940	359000-0819		4	WIRE MARKING, YELLOW, PA3/6"T"	
950	359000-0820		8	WIRE MARKING, YELLOW, PA3/6"U"	
960	359000-0025		30	WIRE MARKING, YELLOW, PA3/6"-"	
P101	90166-0196	MM	2410	TUBE 14MM PA BLUE	
P102	90166-0195	MM	2600	TUBE 12 MM PA BLUE	
P105	90166-0196	MM	240	TUBE 14MM PA BLUE	
P106	90166-0195	MM	1300	TUBE 12 MM PA BLUE	
P1ASU1	90166-0195	MM	230	TUBE 12 MM PA BLUE	
P1ASU2	90166-0195	MM	510	TUBE 12 MM PA BLUE	
P1SUP	90166-0195	MM	100	TUBE 12 MM PA BLUE	
P201	90166-0196	MM	2600	TUBE 14MM PA BLUE	
P202	90166-0013	MM	710	TUBE 8 MM PA BLUE	
P205	90166-0195	MM	1700	TUBE 12 MM PA BLUE	
P206	90166-0195	MM	150	TUBE 12 MM PA BLUE	
P207	90166-0195	MM	180	TUBE 12 MM PA BLUE	
P2SUP	90166-0195	MM	370	TUBE 12 MM PA BLUE	

Machine Type	Group Description	Used-In	Group Number	Page No

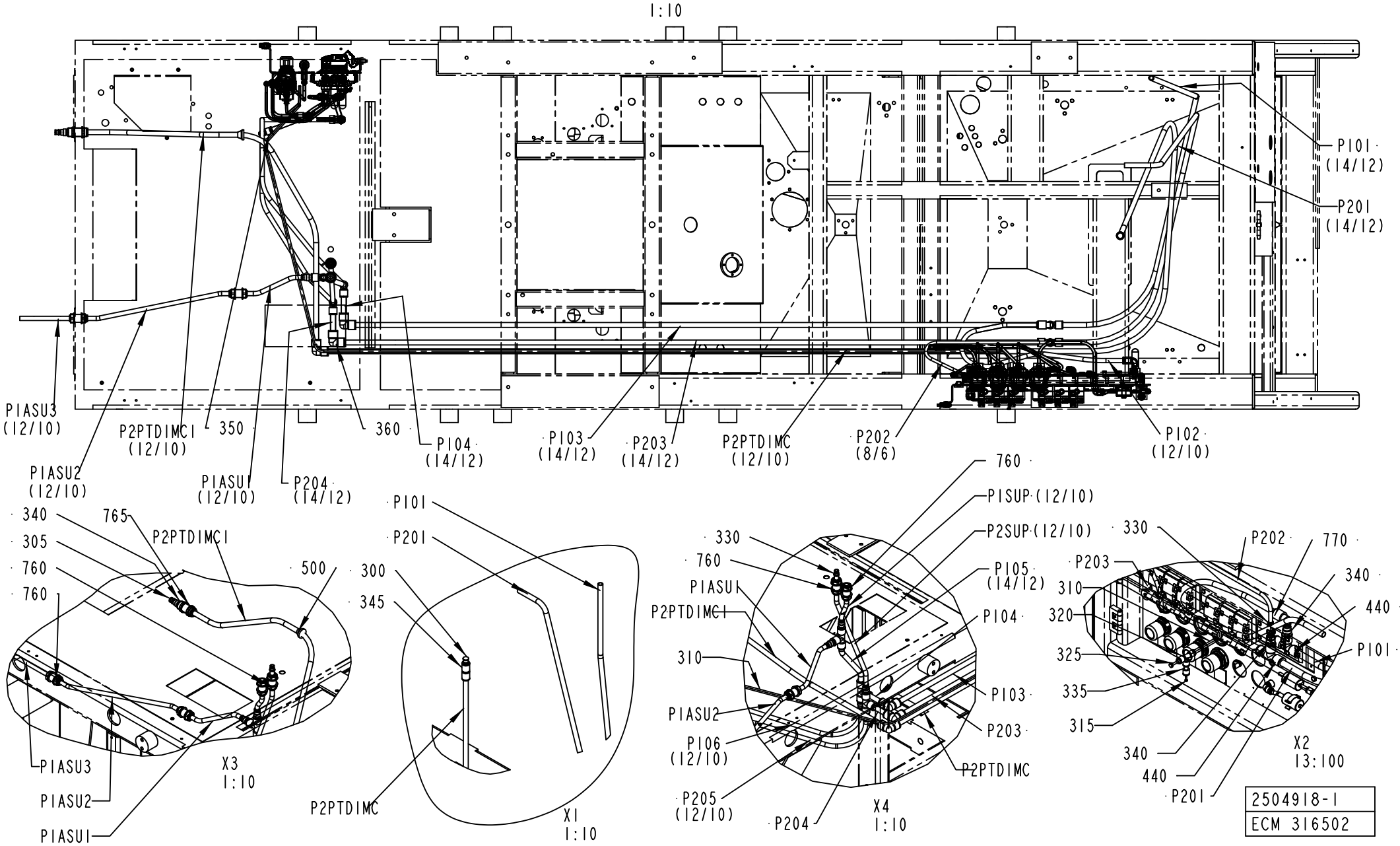
1:10
P101 (14/12)
P201 (14/12)
P1ASU3 (12/10)
P2PTDIMC1 (12/10)
350
360
P104 (14/12)
P103 (14/12)
P203 (14/12)
P2PTDIMC (12/10)
P202 (8/6)
P102 (12/10)
P1ASU2 (12/10)
P1ASU1 (12/10)
P204 (14/12)
340
305
760
760
765
P2PTDIMC1
500
P1ASU3
P1ASU2
P1ASU1
X3
1:10
P101
P201
300
345
P2PTDIMC
X1
1:10
760
P1SUP (12/10)
P2SUP (12/10)
330
760
P1ASU1
P2PTDIMC1
310
P1ASU2
P106 (12/10)
P205 (12/10)
P204
P105 (14/12)
P104
P103
P203
P2PTDIMC
X4
1:10
330
P202
770
P203
340
310
440
320
P101
325
335
315
340
440
P201
X2
13:100
2504918-1
ECM 316502

ECM: 327679 - 20080401
Group number: 2504918-0100
Assembly Drawing: 2504918-1_2_AE

This list covers pages from 2-256 to 2-259

Pos	Part No	UN	Qty	Description	Page No
A3/FLEX TBA NOQC, A3/FLEX TPA NOQC, A3/FLEX TGA QC (See drawing on pages: 2-256, 2-258)					
300	342715-0106		1	BLIND PLUG 14 MM	
305	342715-0105		1	BLIND PLUG 12 MM	
315	350013-0001		1	PLUG QSC-4H	
325	350013-0003		1	PLUG QSC-8H	
335	90459-1605		1	REDUCER 4-8	
340	342716-0211		8	REDUCER 12-14	
360	342735-0110		3	ELBOW PIPE	
P103	90166-0196	MM	2350	TUBE 14MM PA BLUE	
P104	90166-0196	MM	120	TUBE 14MM PA BLUE	
P1ASU3	90166-0195	MM	3200	TUBE 12 MM PA BLUE	
P203	90166-0196	MM	2400	TUBE 14MM PA BLUE	
P204	90166-0195	MM	120	TUBE 12 MM PA BLUE	
P2PTDIMC	90166-0196	MM	4800	TUBE 14MM PA BLUE	
P2PTDIMC1	90166-0196	MM	1440	TUBE 14MM PA BLUE	
A3/FLEX TBA QC, A3/FLEX TPA QC (See drawing on pages: 2-256, 2-258)					
300	342715-0106		1	BLIND PLUG 14 MM	
305	342715-0105		1	BLIND PLUG 12 MM	
335	90459-1605		1	REDUCER 4-8	
340	342716-0211		8	REDUCER 12-14	
360	342735-0110		3	ELBOW PIPE	
P103	90166-0196	MM	2350	TUBE 14MM PA BLUE	
P104	90166-0196	MM	120	TUBE 14MM PA BLUE	
P1ASU3	90166-0195	MM	3200	TUBE 12 MM PA BLUE	
P203	90166-0196	MM	2400	TUBE 14MM PA BLUE	
P204	90166-0195	MM	120	TUBE 12 MM PA BLUE	
P2PTDIMC	90166-0196	MM	4800	TUBE 14MM PA BLUE	
P2PTDIMC1	90166-0196	MM	1440	TUBE 14MM PA BLUE	
Common Parts					
310	90166-0013	MM	6000	TUBE 8 MM PA BLUE	
320	342748-0103		1	T-CONNECTION 8MM	
330	342716-0209		2	REDUCER 8-12	
345	342728-0110		1	PIPE COUPLING 14 MM	
350	342735-0109		2	ELBOW PIPE JOINT	
440	342748-0110		5	T-CONNECTION 14MM	
500	90015-0021		1	LEAD-IN, TET10-14, E-1458023	
760	90458-2602		4	BULKHEAD CONNECTOR, 12 MM	
765	342768-0110		1	BULKHEAD CONNECTOR, 14 MM	
770	90055-0277		1	ELBOW WITH TAILPIECE 12/12 MM	
780	90157-0034		1	THREAD SEALANT LOCTITE 572 50 ML	
790	359000-0500		16	WIRE MARKING, YELLOW, PA3/6"0"	
800	359000-0501		16	WIRE MARKING, YELLOW, PA3/6"1"	
810	359000-0502		14	WIRE MARKING, YELLOW, PA3/6"2"	
820	359000-0503		4	WIRE MARKING, YELLOW, PA3/6"3"	
830	359000-0504		4	WIRE MARKING, YELLOW, PA3/6"4"	
840	359000-0505		4	WIRE MARKING, YELLOW, PA3/6"5"	
850	359000-0506		4	WIRE MARKING, YELLOW, PA3/6"6"	
860	359000-0507		2	WIRE MARKING, YELLOW, PA3/6"7"	
870	359000-0800		4	WIRE MARKING, YELLOW, PA3/6"A"	
880	359000-0802		4	WIRE MARKING, YELLOW, PA3/6"C"	
890	359000-0803		4	WIRE MARKING, YELLOW, PA3/6"D"	
900	359000-0808		4	WIRE MARKING, YELLOW, PA3/6"I"	
910	359000-0812		4	WIRE MARKING, YELLOW, PA3/6"M"	
920	359000-0815		30	WIRE MARKING, YELLOW, PA3/6"P"	
930	359000-0818		8	WIRE MARKING, YELLOW, PA3/6"S"	
940	359000-0819		4	WIRE MARKING, YELLOW, PA3/6"T"	
950	359000-0820		8	WIRE MARKING, YELLOW, PA3/6"U"	
960	359000-0025		30	WIRE MARKING, YELLOW, PA3/6"-"	
P101	90166-0196	MM	2410	TUBE 14MM PA BLUE	
P102	90166-0195	MM	2600	TUBE 12 MM PA BLUE	
P105	90166-0196	MM	240	TUBE 14MM PA BLUE	
P106	90166-0195	MM	1300	TUBE 12 MM PA BLUE	
P1ASU1	90166-0195	MM	230	TUBE 12 MM PA BLUE	
P1ASU2	90166-0195	MM	510	TUBE 12 MM PA BLUE	
P1SUP	90166-0195	MM	100	TUBE 12 MM PA BLUE	
P201	90166-0196	MM	2600	TUBE 14MM PA BLUE	
P202	90166-0013	MM	710	TUBE 8 MM PA BLUE	
P205	90166-0195	MM	1700	TUBE 12 MM PA BLUE	
P206	90166-0195	MM	150	TUBE 12 MM PA BLUE	
P207	90166-0195	MM	180	TUBE 12 MM PA BLUE	
P2SUP	90166-0195	MM	370	TUBE 12 MM PA BLUE	

Machine Type | Group Description | Used-In | Group Number | Page No

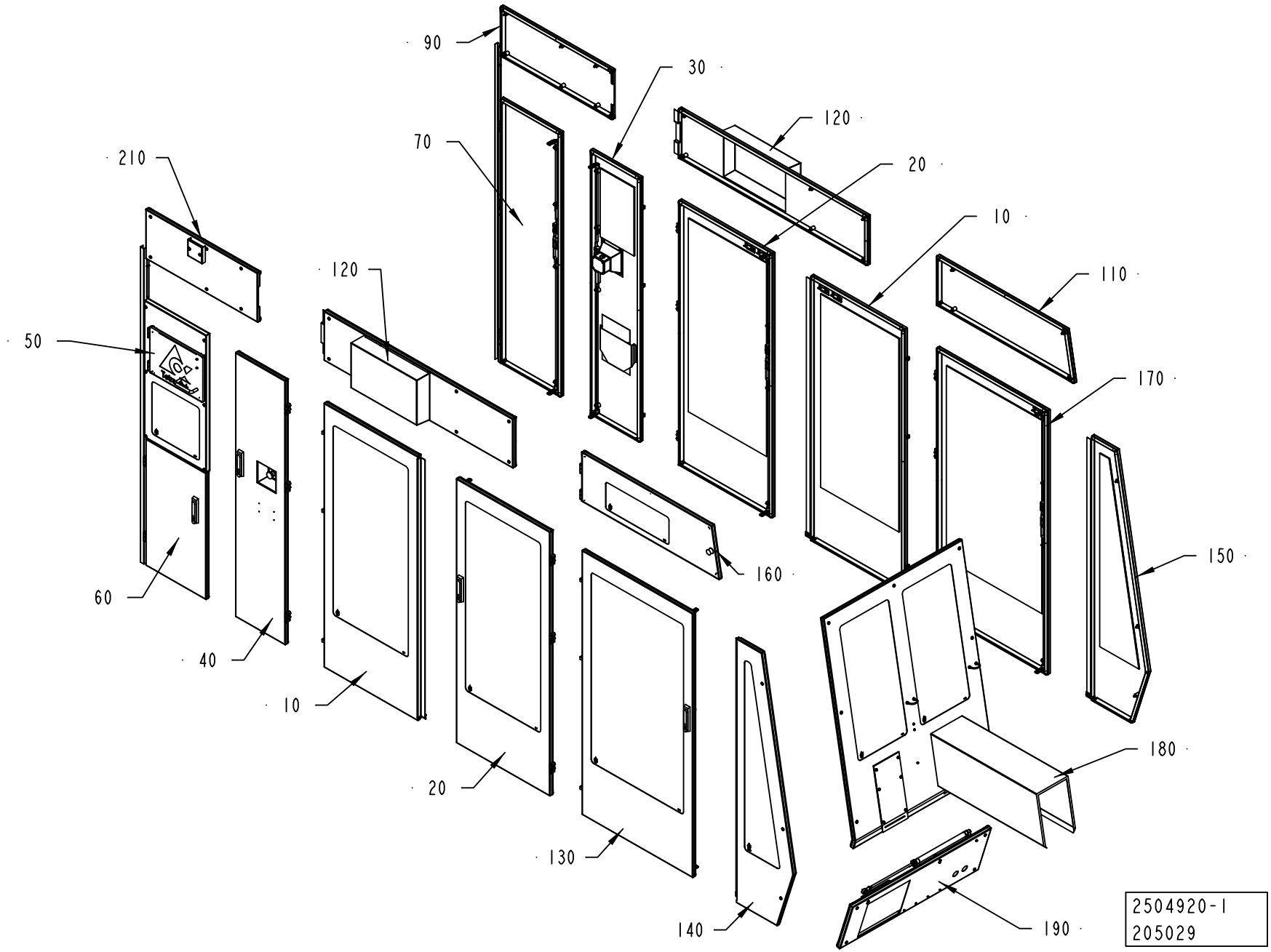
90
30
120
70
20
210
10
120
110
50
170
150
160
60
40
10
20
180
130
140
190
2504920-1
205029

ECM: 356993 - 20080403
Group number: 2504920-0100
Assembly Drawing: 2504920-1_1_AC

This list covers pages from 2-260 to 2-263

Pos	Part No	UN	Qty	Description	Page No
A3/FLEX TBA, A3/FLEX TPA (See drawing on page: 2-260)					
010	2508129-0100		2	DOOR	**2-265**
020	2508135-0100		2	DOOR	**2-267**
040	2508141-0100		1	DOOR	**2-269**
050	2544310-0100		1	PROTECTIVE COVER	**2-273**
090	2508159-0100		1	COVER	**2-275**
110	2508165-0100		1	COVER	**2-277**
120	2508168-0100		2	COVER	**2-279**
140	2508177-0100		1	DOOR	**2-281**
150	2508181-0100		1	DOOR	**2-283**
160	2774454-0100		1	COVER	**2-285**
170	2530080-0100		1	DOOR	**2-287**
180	2512830-0100		1	FRONT COVER	**2-289**
190	2510347-0100		1	FRONT GUARD	**2-297**
A3/FLEX TGA (See drawing on page: 2-262)					
010	2508129-0100		2	DOOR	**2-265**
020	2508135-0100		2	DOOR	**2-267**
040	2508141-0100		1	DOOR	**2-269**
050	2544310-0100		1	PROTECTIVE COVER	**2-273**
090	2508159-0100		1	COVER	**2-275**
100	2810654-0100		1	COVER	**2-299**
110	2810652-0100		1	COVER	**2-301**
120	2508168-0100		2	COVER	**2-279**
140	2810651-0100		1	DOOR	**2-303**
145	2810658-0100		1	COVER	**2-305**
150	2810655-0100		1	DOOR	**2-307**
155	2810656-0100		1	DOOR	**2-313**
160	2510764-0100		1	COVER	**2-315**
170	2810657-0100		1	DOOR	**2-317**
180	2778608-0100		1	COVER	**2-323**
Common Parts					
030	2508138-0100		1	DOOR	**2-325**
060	2508149-0200		1	DOOR	**2-329**
070	2529597-0200		1	DOOR	**2-331**
130	2508175-0100		1	DOOR	**2-333**
210	2544333-0100		1	DOOR	**2-335**

Pos	Part No	UN	Qty	Description	Page No

Machine Type | Group Description | Used-In | Group Number | Page No

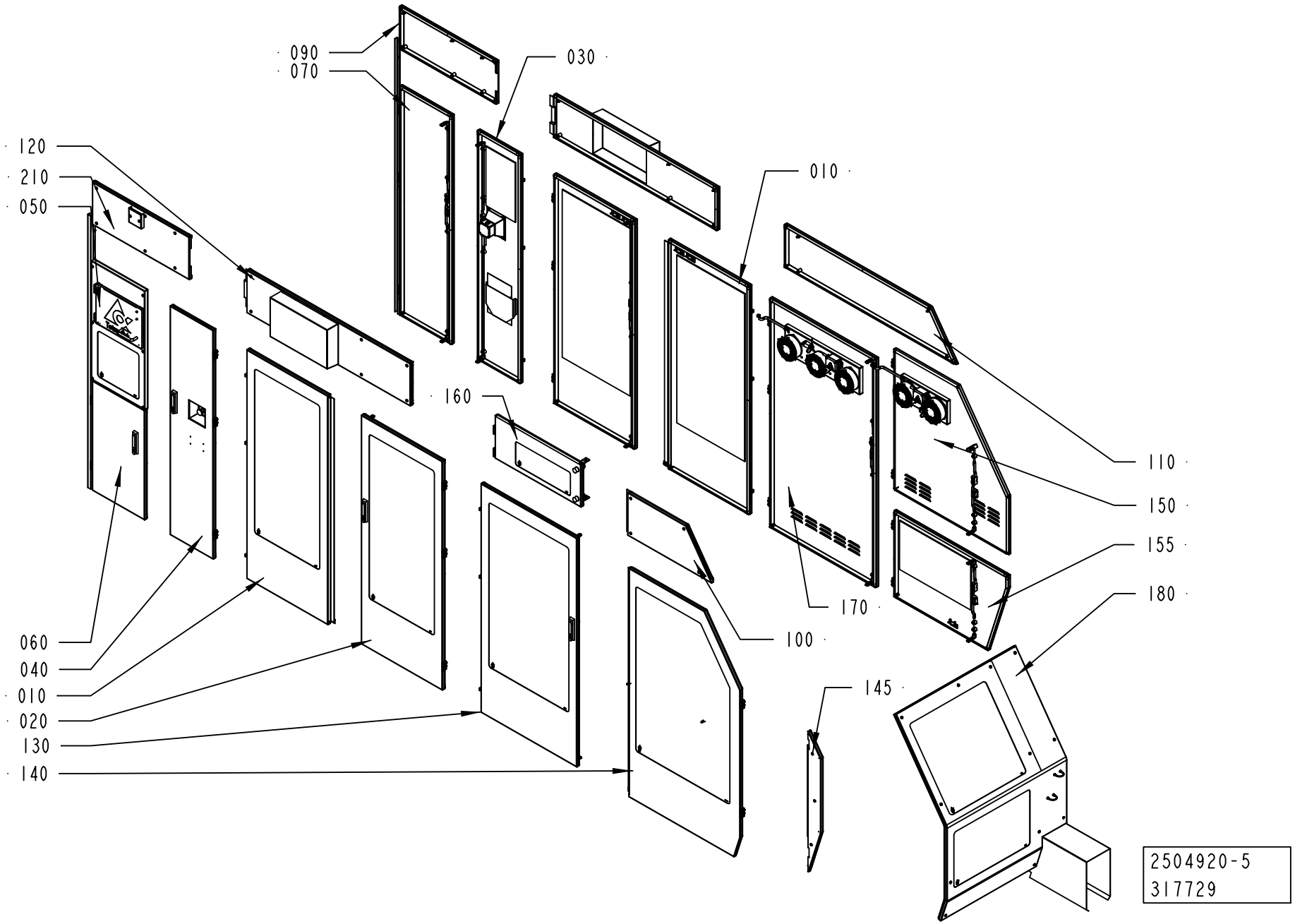
090
070
030
120
210
050
010
160
110
150
155
180
170
100
145
060
040
010
020
130
140
2504920-5
317729

ECM: 356993 - 20080403
Group number: 2504920-0100
Assembly Drawing: 2504920-5_1_AB

This list covers pages from 2-260 to 2-263

Pos	Part No	UN	Qty	Description	Page No
A3/FLEX TBA, A3/FLEX TPA (See drawing on page: 2-260)					
010	2508129-0100		2	DOOR	**2-265**
020	2508135-0100		2	DOOR	**2-267**
040	2508141-0100		1	DOOR	**2-269**
050	2544310-0100		1	PROTECTIVE COVER	**2-273**
090	2508159-0100		1	COVER	**2-275**
110	2508165-0100		1	COVER	**2-277**
120	2508168-0100		2	COVER	**2-279**
140	2508177-0100		1	DOOR	**2-281**
150	2508181-0100		1	DOOR	**2-283**
160	2774454-0100		1	COVER	**2-285**
170	2530080-0100		1	DOOR	**2-287**
180	2512830-0100		1	FRONT COVER	**2-289**
190	2510347-0100		1	FRONT GUARD	**2-297**
A3/FLEX TGA (See drawing on page: 2-262)					
010	2508129-0100		2	DOOR	**2-265**
020	2508135-0100		2	DOOR	**2-267**
040	2508141-0100		1	DOOR	**2-269**
050	2544310-0100		1	PROTECTIVE COVER	**2-273**
090	2508159-0100		1	COVER	**2-275**
100	2810654-0100		1	COVER	**2-299**
110	2810652-0100		1	COVER	**2-301**
120	2508168-0100		2	COVER	**2-279**
140	2810651-0100		1	DOOR	**2-303**
145	2810658-0100		1	COVER	**2-305**
150	2810655-0100		1	DOOR	**2-307**
155	2810656-0100		1	DOOR	**2-313**
160	2510764-0100		1	COVER	**2-315**
170	2810657-0100		1	DOOR	**2-317**
180	2778608-0100		1	COVER	**2-323**
Common Parts					
030	2508138-0100		1	DOOR	**2-325**
060	2508149-0200		1	DOOR	**2-329**
070	2529597-0200		1	DOOR	**2-331**
130	2508175-0100		1	DOOR	**2-333**
210	2544333-0100		1	DOOR	**2-335**

Pos	Part No	UN	Qty	Description	Page No

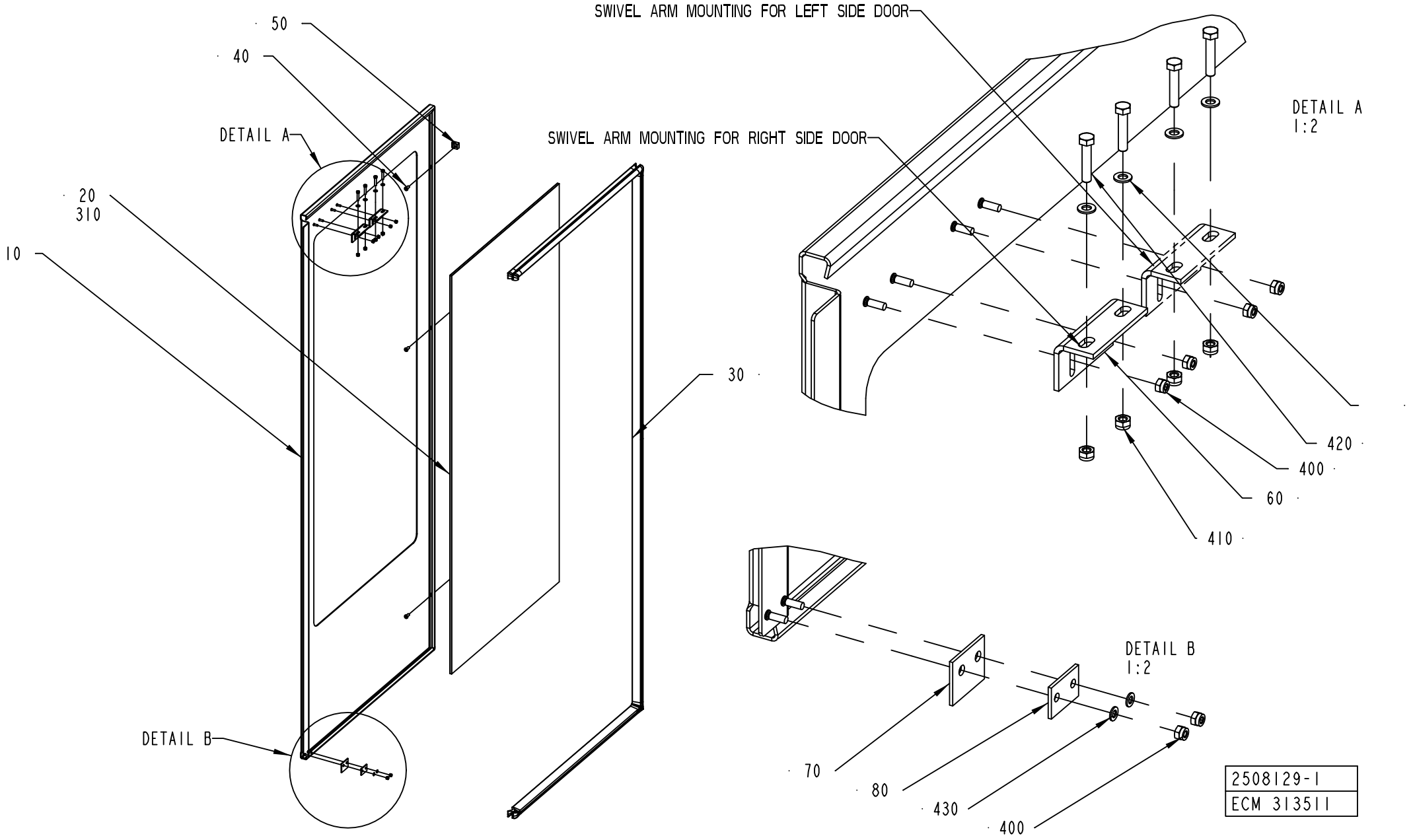
50
40
DETAIL A
20
310
10
DETAIL B
SWIVEL ARM MOUNTING FOR RIGHT SIDE DOOR
30
SWIVEL ARM MOUNTING FOR LEFT SIDE DOOR
DETAIL A
1:2
420
400
60
410
DETAIL B
1:2
70
80
430
400
2508129-1
ECM 313511

ECM: 339951 - 20080402
Group number: 2508129-0100
Assembly Drawing: 2508129-1_1_AC

Pos	Part No	UN	Qty	Description	Page No
A3/FLEX					
010	2508130-0000		1	DOOR	
020	2508131-0000		1	GLASS PANE	
030	2508132-0000		1	RUBBER SEAL	
Common Parts					
040	1129767-0000		3	SCREW	
050	1129770-0000		3	BLOCKING PIECE	
060	1346885-0000		1	SUPPORT	
070	1129325-0000		1	SEALING FLANGE	
080	1129324-0000		1	WASHER	
310	90157-0041		1	SEALING COMPOUND, RHODORSEAL 5651	
400	312812-0312		4	HEXAGON NUT, NY-LOCK M4 A480	
410	312812-0314		2	HEXAGON NUT, NY-LOCK M5 A480	
420	312105-0333		2	SCREW M6S ISO 4017 M5X25 A480	
430	315105-0136		2	WASHER BRB 4,3X8 RFR	
440	315105-0146		2	WASHER BRB 5,3X10 RFR	

Pos	Part No	UN	Qty	Description	Page No

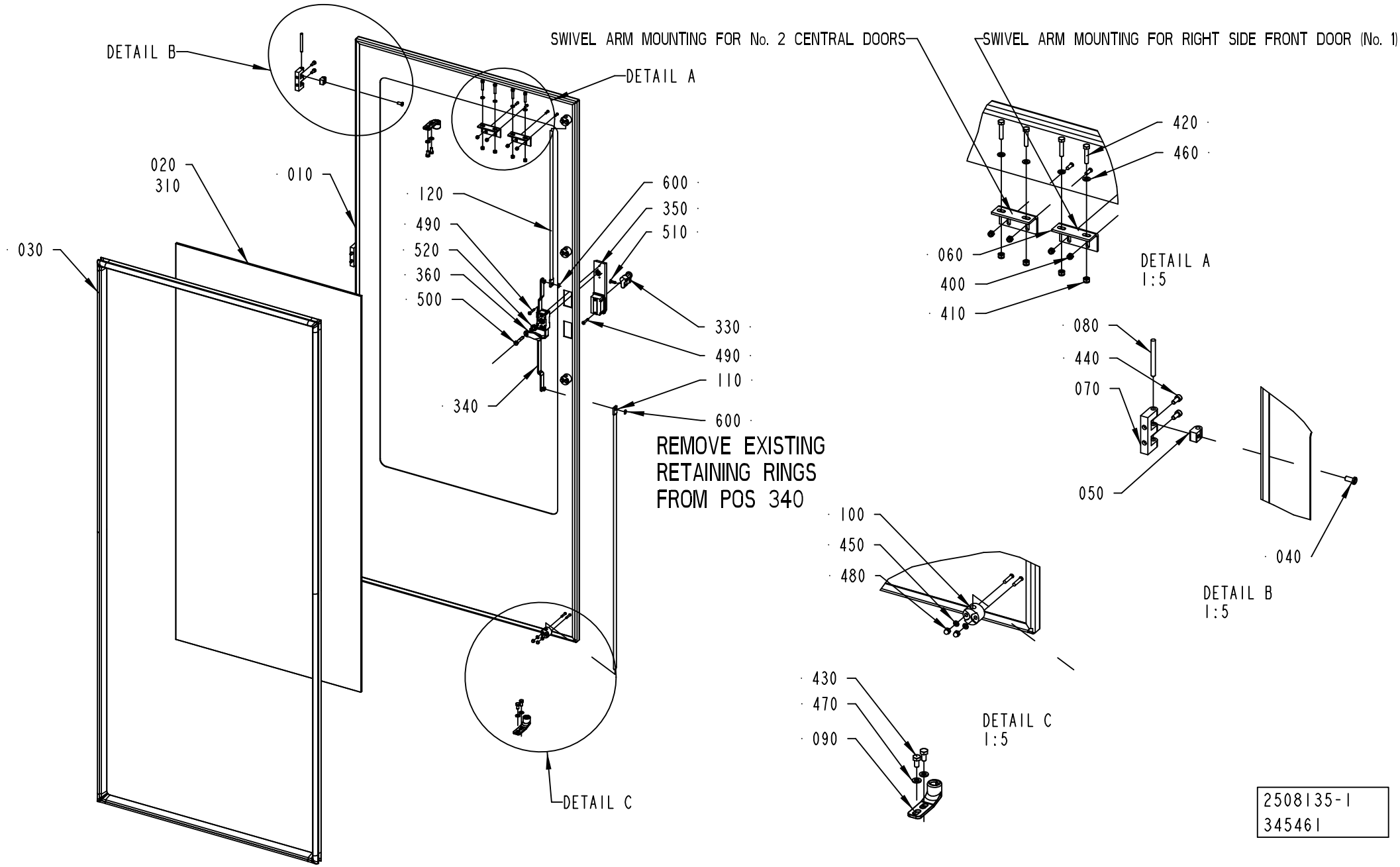

2508135-1
345461

ECM: 392005 - 20090701
Group number: 2508135-0100
Assembly Drawing: 2508135-1_1_AD

Pos	Part No	UN	Qty	Description	Page No
A3/FLEX					
010	2508136-0000		1	DOOR	
020	2508131-0000		1	GLASS PANE	
030	2508137-0000		1	RUBBER SEAL	
Common Parts					
040	1129767-0000		3	SCREW	
050	1129770-0000		3	BLOCKING PIECE	
060	1346885-0000		1	SUPPORT	
070	1035792-0000		3	E-HINGE	
080	988685-0000		3	PIN	
090	1538868-0000		2	BRACKET	
100	1129274-0000		4	GUIDE LUG	
110	2508133-0000		1	LOCKING ARM	
120	2508134-0000		1	LOCKING ARM	
310	90157-0041		1	SEALING COMPOUND, RHODORSEAL 5651	
330	90237-0128		1	LOCK CYLINDER, 1109-SU125	
340	90600-8386		1	LOCK HOUSING, 1121-SU887-B	
350	90600-5084		1	LEVER MECHANISM, 1125-SU404	
360	90600-4542		1	LOCK CAM, 1000-227-01	
400	312812-0312		2	HEXAGON NUT, NY-LOCK M4 A480	
410	312812-0314		2	HEXAGON NUT, NY-LOCK M5 A480	
420	312105-0333		2	SCREW M6S ISO 4017 M5X25 A480	
430	312105-0366		4	SCREW M6S ISO 4017 M6X12 A480	
440	312115-0327		6	SCREW ISO4762 M5X12 A4 80	
450	315105-0136		8	WASHER BRB 4,3X8 RFR	
460	315105-0146		2	WASHER BRB 5,3X10 RFR	
470	315105-0153		4	WASHER BRB 6,4X12 RFR	
480	312705-0312		8	NUT HEX. DOMED CAP MHM-6 M4 A280	
490	312504-0348		4	TAPPING SCREW ISO 7049-A2-ST4,2X25-C-Z	
500	312105-0376		1	SCREW M6S ISO 4014 M6X35 A480	
510	312155-0329		1	SCREW DIN 7991 MF6S M5X16 A4 70	
520	90600-8406		1	SPACER, 1000-S1455-SK	
600	315755-0107		2	RETAINING RING SHAFT DIN 6799 5 A2	

Pos	Part No	UN	Qty	Description	Page No

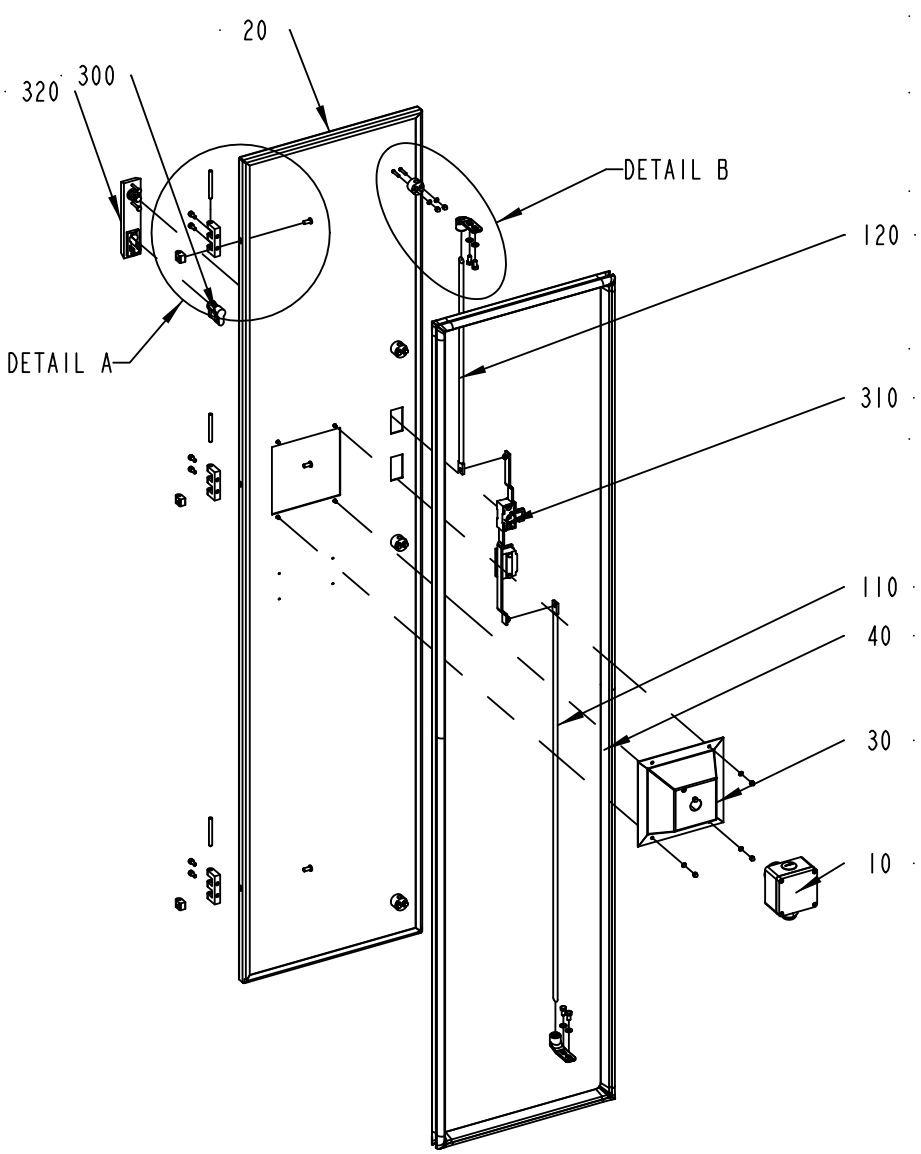

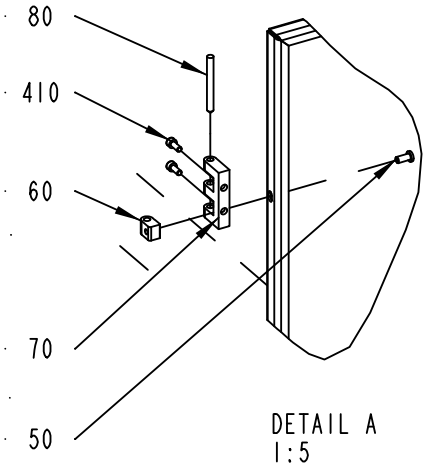

DETAIL A
1:5

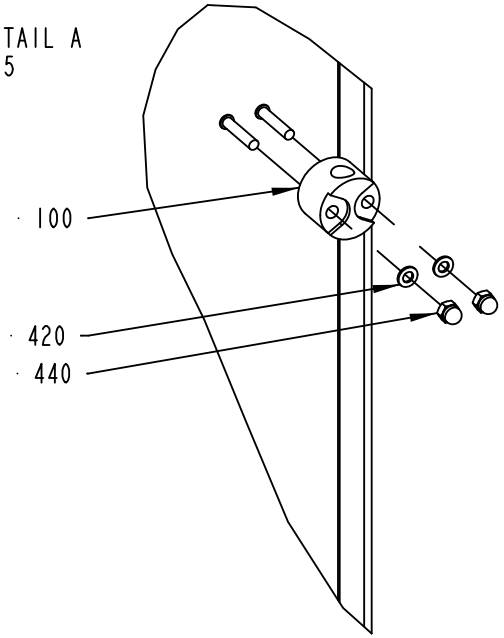

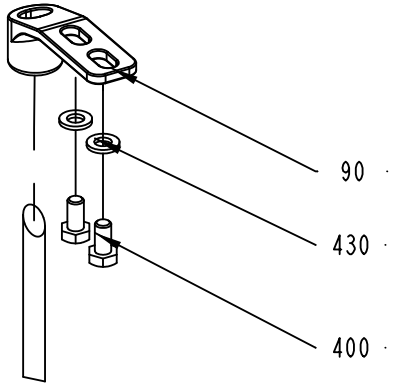

DETAIL B
1:2

2508141-1
ECM 117162

ECM: 189909 - 20041104
Group number: 2508141-0100
Assembly Drawing: 2508141-1_1_AA

Pos	Part No	UN	Qty	Description	Page No
-					
010	2593851-0100		1	EMERGENCY STOP	**2-271**
020	2508142-0000		1	DOOR	
030	2532619-0000		1	COVER	
040	2508186-0000		1	RUBBER SEAL	
050	1129767-0000		3	SCREW	
060	1129770-0000		3	BLOCKING PIECE	
070	1035792-0000		3	E-HINGE	
080	988685-0000		3	PIN	
090	1538868-0000		2	BRACKET	
100	1129274-0000		4	GUIDE LUG	
110	2508133-0000		1	LOCKING ARM	
120	2508140-0000		1	LOCKING ARM	
300	90237-0128		1	LOCK CYLINDER, 1109-SU125	
310	90237-0153		1	LOCK HOUSING, 1121-U26-0B	
320	90237-0176		1	TURNING HANDLE, 1125-U190-A	
400	312105-0366		4	SCREW M6S ISO 4017 M6X12 A480	
410	312115-0327		6	SCREW ISO4762 M5X12 A4 80	
420	315105-0136		12	WASHER BRB 4,3X8 RFR	
430	315105-0153		4	WASHER BRB 6,4X12 RFR	
440	312705-0312		12	NUT HEX. DOMED CAP MHM-6 M4 A280	

Pos	Part No	UN	Qty	Description	Page No

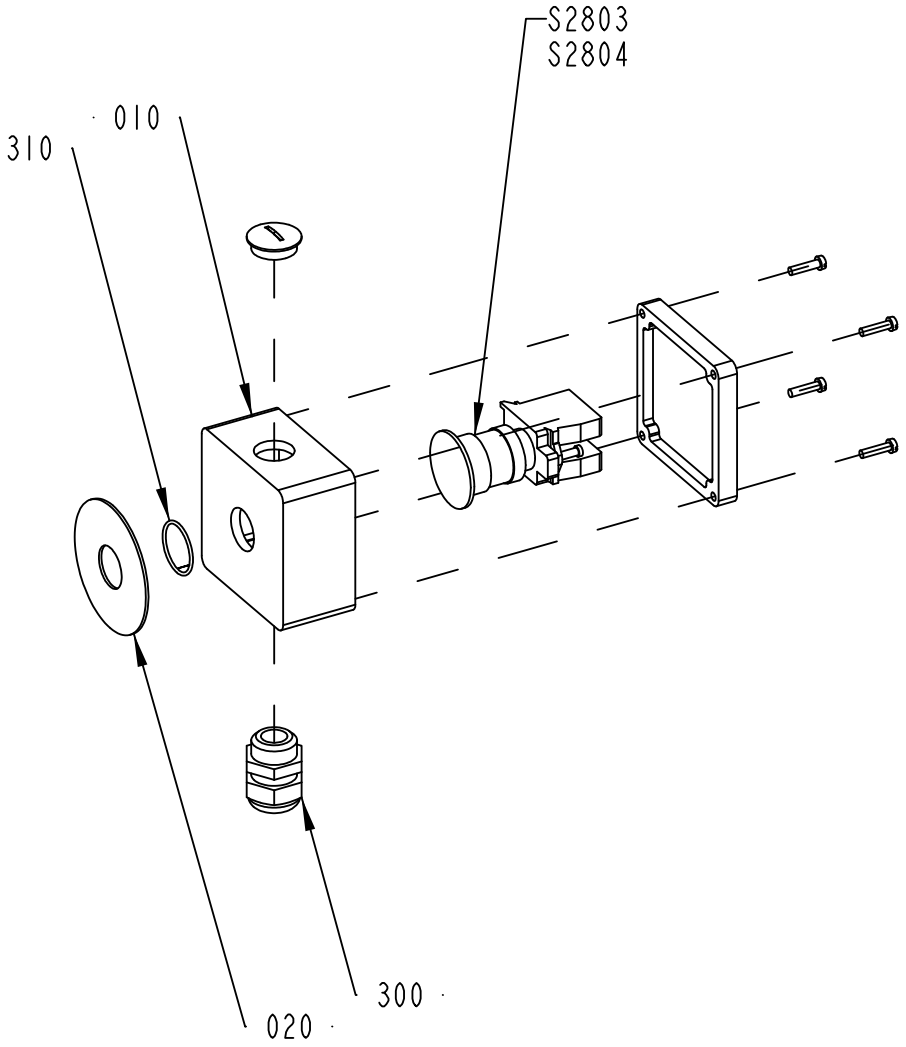

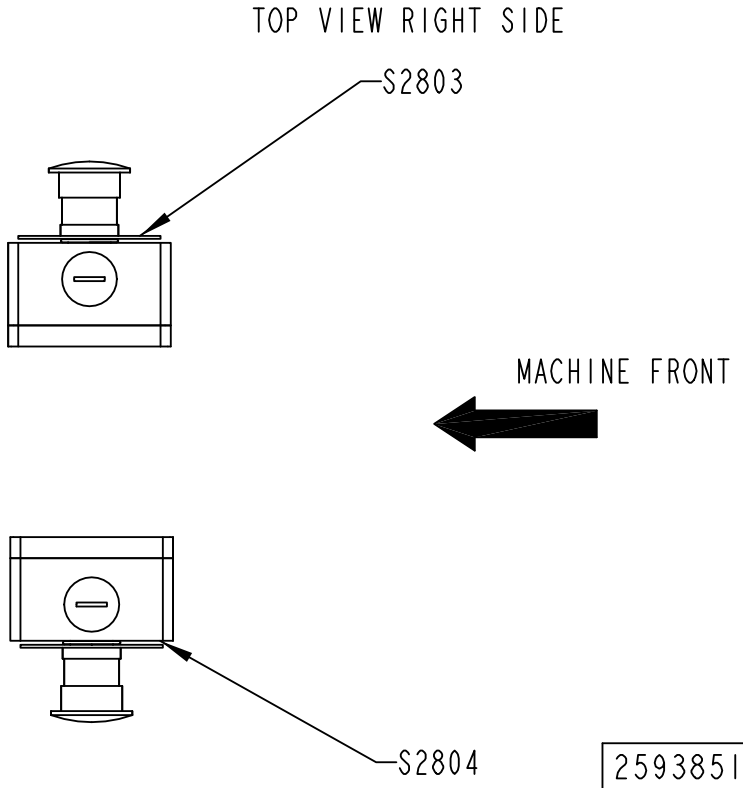

2593851-1
ECM 117744

ECM: 189908 - 20041104
Group number: 2593851-0100
Assembly Drawing: 2593851-1_1_AA

Pos	Part No	UN	Qty	Description	Page No
-					
010	1037130-0000		1	CONNECTION BOX	
020	486826-0001		1	SIGN "EMERGENCY STOP"	
300	352103-0110		1	CABLE GLAND, STR 16, PR22,5/PG16	
310	315202-0119		1	O-RING 25,1X1,6 MM	
S2803	90458-1651		1	EMERGENCY STOP, ZB4-BS-844 ZB4-BZ-104	

Pos	Part No	UN	Qty	Description	Page No

PROTECTIVE COVER

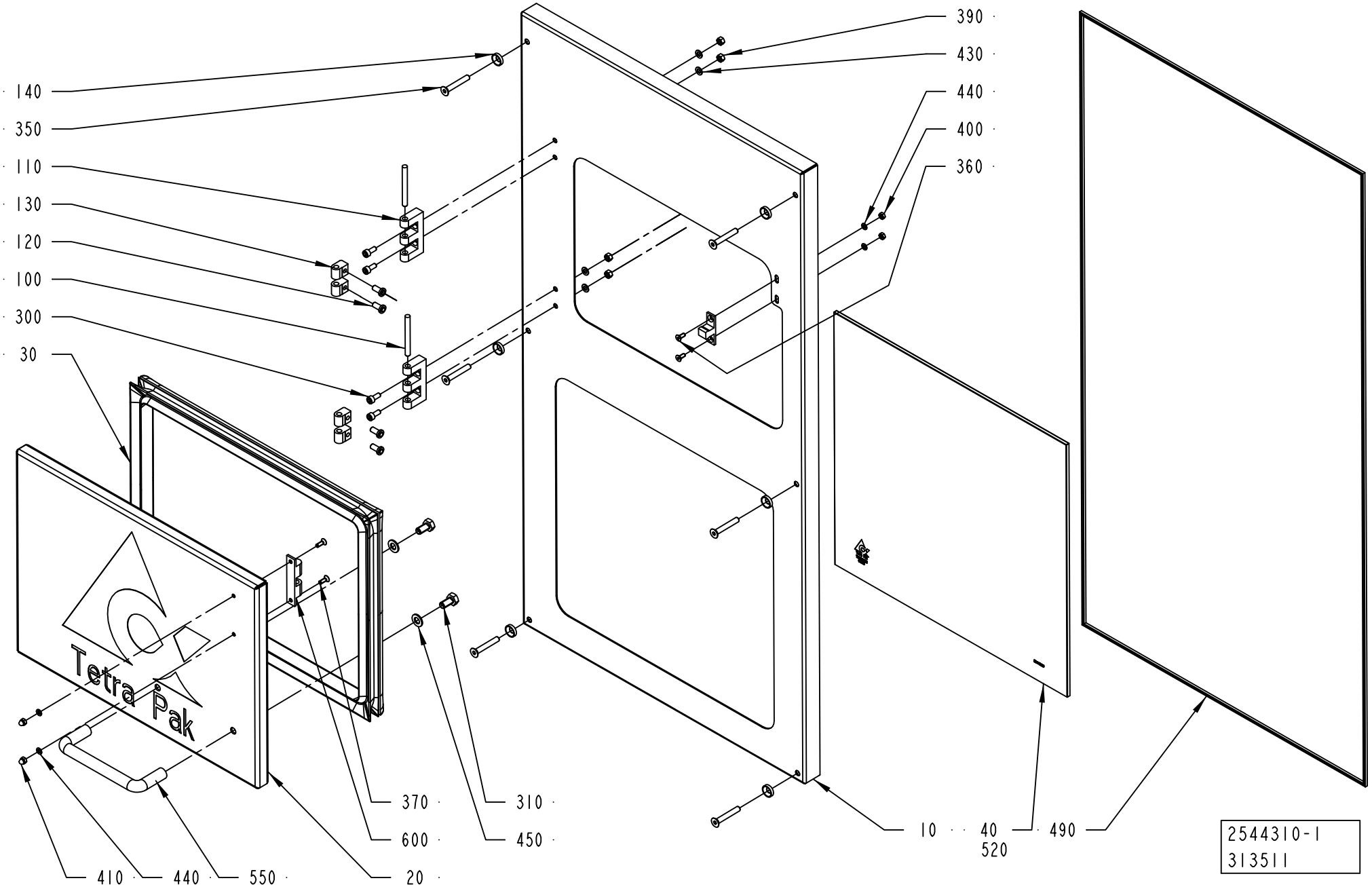

ECM: 340556 - 20080403
Group number: 2544310-0100
Assembly Drawing: 2544310-1_1_AC

Pos	Part No	UN	Qty	Description	Page No
-					
010	2544305-0000		1	PROTECTION	
020	2544306-0000		1	DOOR	
030	2544307-0000		1	RUBBER SEAL	
040	2544308-0000		1	GLASS PANE	
100	988685-0000		2	PIN	
110	1035792-0000		2	E-HINGE	
120	1129767-0000		4	SCREW	
130	1129770-0000		4	BLOCKING PIECE	
140	1317228-0000		6	WASHER	
300	312115-0327		4	SCREW ISO4762 M5X12 A4 80	
310	312105-0449		2	SCREW M6S ISO 4017 M8X16 A480	
350	312155-0378		6	SCREW DIN 7991 MF6S M6X40 A4 70	
360	312155-0289		2	SCREW DIN 7991 MF6S M4X10 A4 70	
370	312155-0291		2	SCREW DIN 7991 MF6S M4X12 A4 70	
390	312605-0314		4	HEXAGON NUT, M6M M5 A280	
400	312605-0312		2	HEXAGON NUT, M6M M4 A280	
410	312705-0312		2	NUT HEX. DOMED CAP MHM-6 M4 A280	
430	315105-0146		4	WASHER BRB 5,3X10 RFR	
440	315105-0136		4	WASHER BRB 4,3X8 RFR	
450	315105-0165		2	WASHER BRB 8,4X16 RFR	
490	90143-0054	MM	2740	STRIP	
520	90157-0041		1	SEALING COMPOUND, RHODORSEAL 5651	
550	90017-0016		1	HANDLE, NO. 14.4012.02.120	
600	90237-0070		1	SNAP-IN BALL LOCK, 69X19 MM	

Pos	Part No	UN	Qty	Description	Page No

Machine Type | Group Description | Used-In | Group Number | Page No

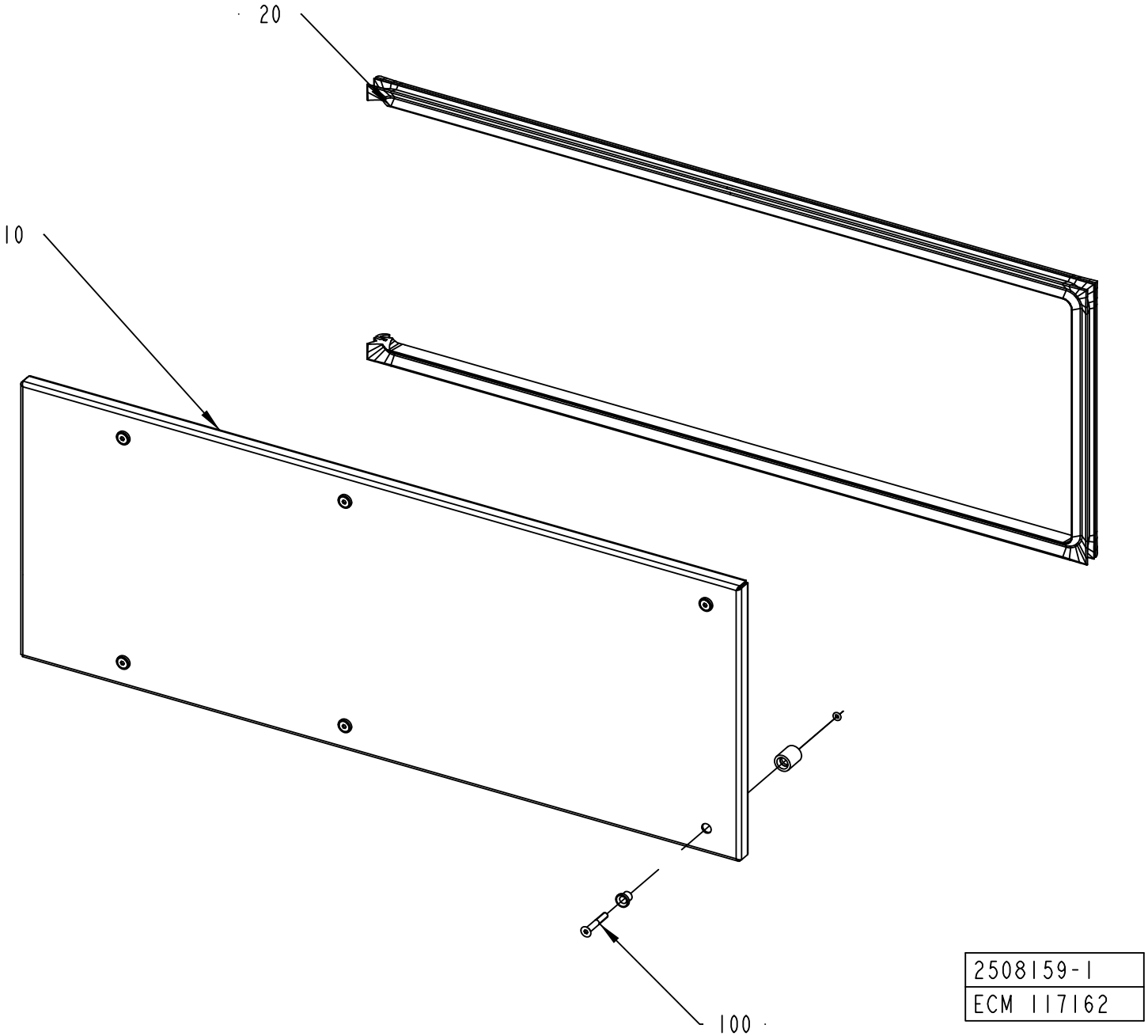

2508159-1
ECM 117162

ECM: 189915 - 20041104
Group number: 2508159-0100
Assembly Drawing: 2508159-1_1_AA

Pos	Part No	UN	Qty	Description	Page No
-					
010	2508160-0000		1	COVER	
020	2508161-0000		1	RUBBER SEAL	
100	90226-0458		6	MOUNTING SCREW	

Pos	Part No	UN	Qty	Description	Page No

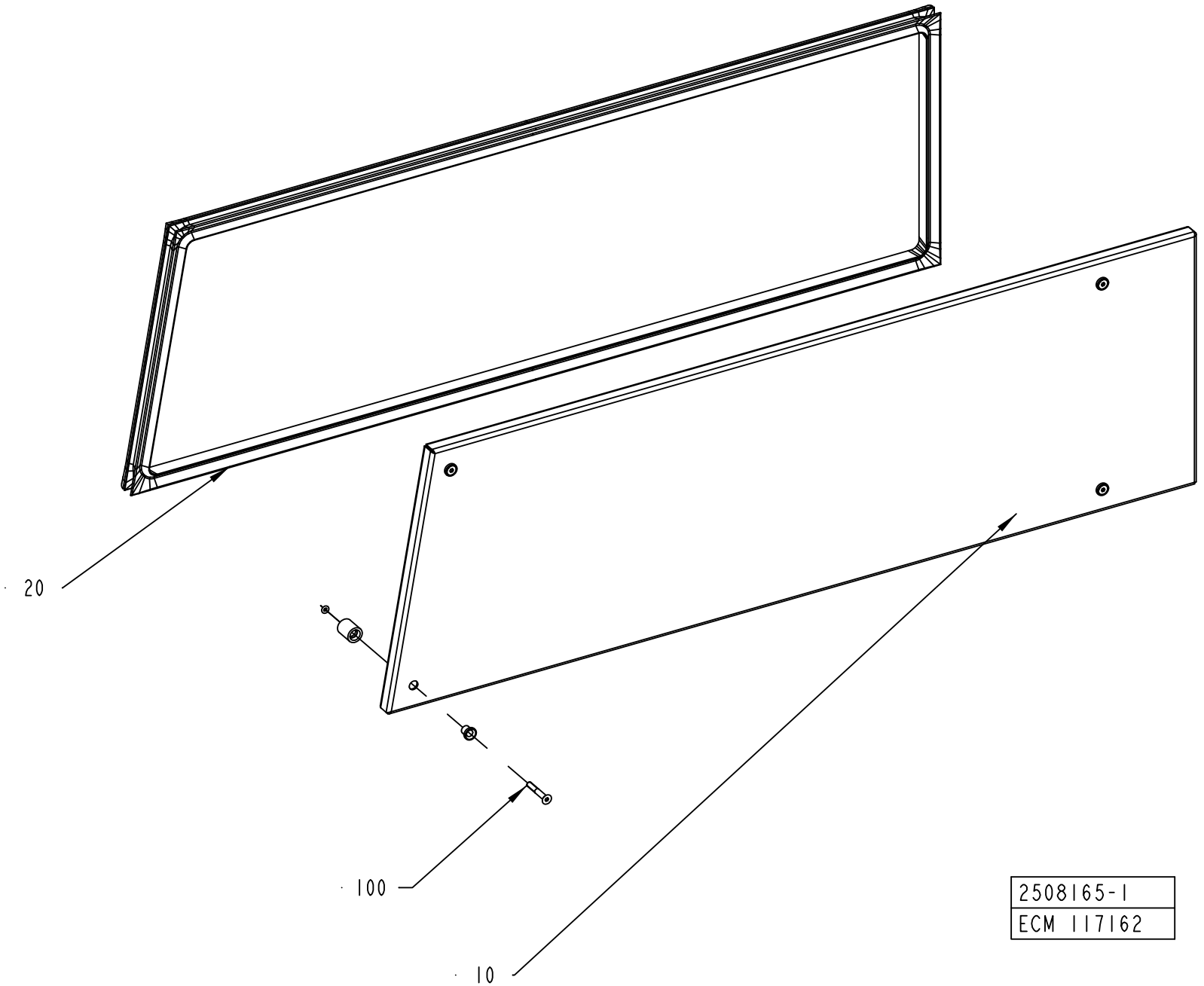
20
100
10
2508165-1
ECM 117162

ECM: 189919 - 20041104
Group number: 2508165-0100
Assembly Drawing: 2508165-1_1_AA

Pos	Part No	UN	Qty	Description	Page No
-					
010	2508166-0000		1	COVER	
020	2508167-0000		1	RUBBER SEAL	
100	90226-0458		4	MOUNTING SCREW	

Pos	Part No	UN	Qty	Description	Page No

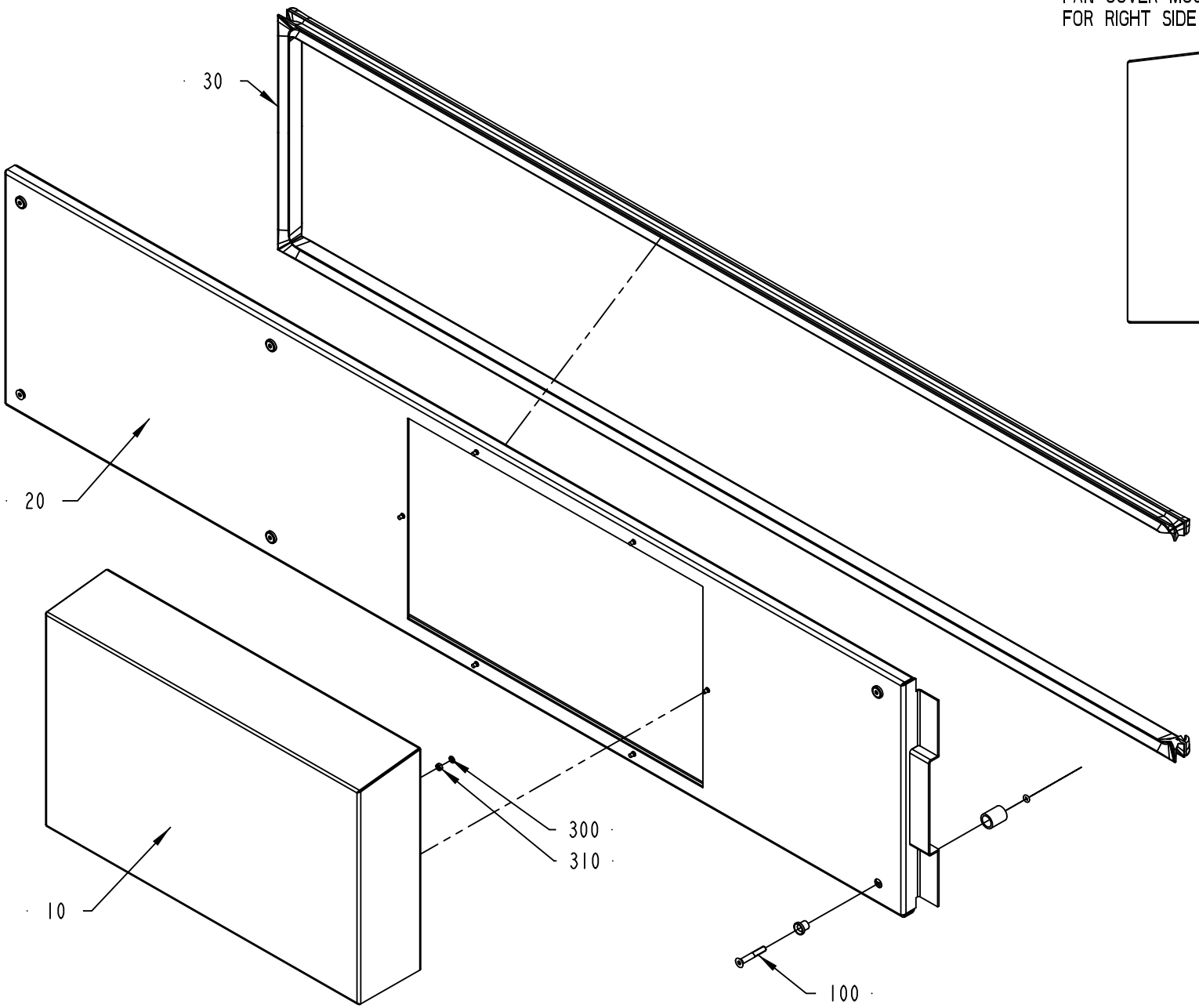

FAN COVER MOUNTING
FOR RIGHT SIDE COVER

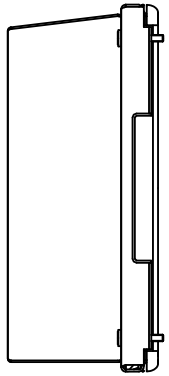

FAN COVER MOUNTING
FOR LEFT SIDE COVER

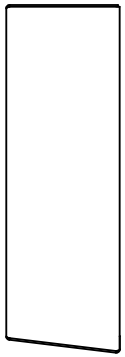

2508168-1
ECM 205029

ECM: 224422 - 20060701
Group number: 2508168-0100
Assembly Drawing: 2508168-1_1_AB

Pos	Part No	UN	Qty	Description	Page No
-					
010	2746721-0000		1	COVER	
020	2508169-0000		1	COVER	
030	2508171-0000		1	RUBBER SEAL	
100	90226-0458		6	MOUNTING SCREW	
300	315105-0136		4	WASHER BRB 4,3X8 RFR	
310	312605-0312		4	HEXAGON NUT, M6M M4 A280	

Pos	Part No	UN	Qty	Description	Page No

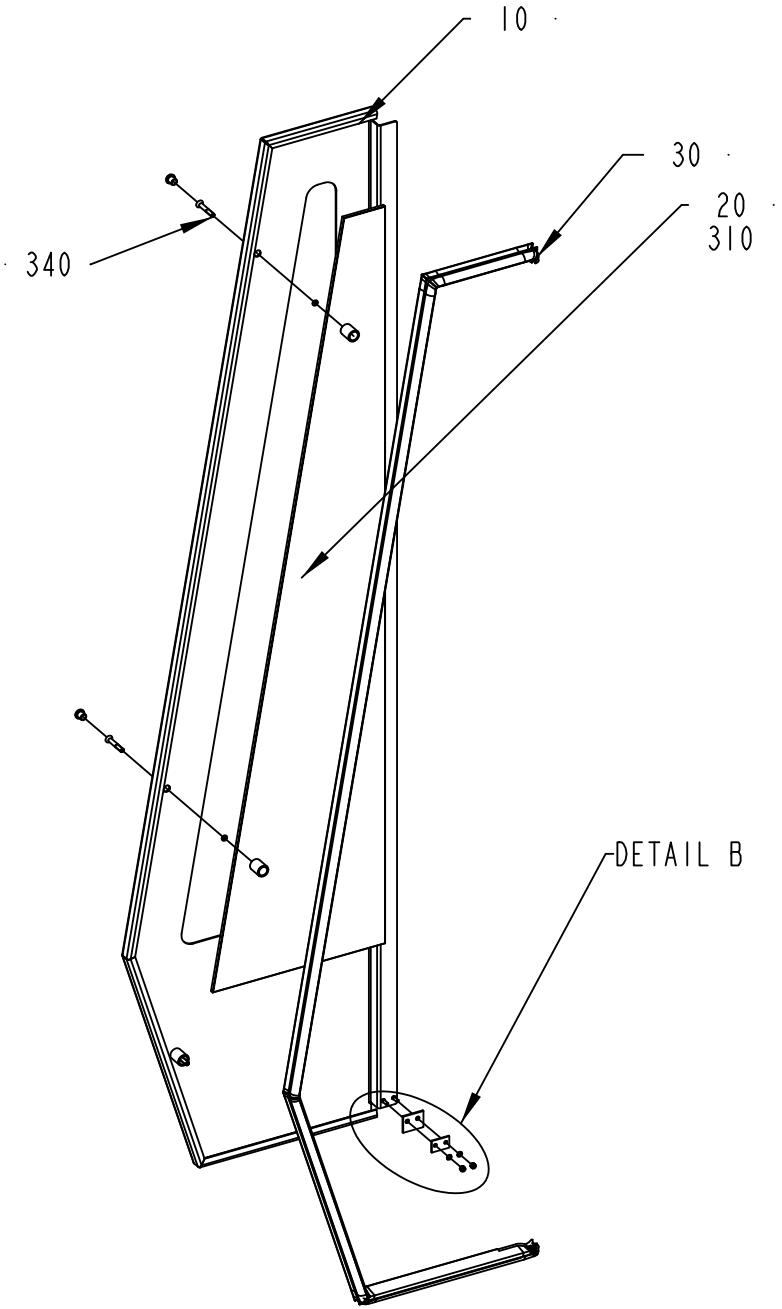

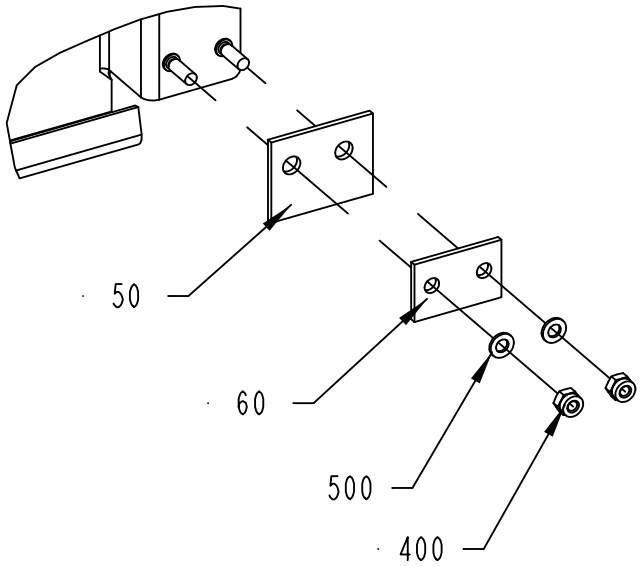

DETAIL B
1:2

2508177-1
313511

ECM: 339759 - 20080402
Group number: 2508177-0100
Assembly Drawing: 2508177-1_1_AC

Pos	Part No	UN	Qty	Description	Page No
A3/FLEX					
010	2508178-0000		1	DOOR	
020	2508180-0001		1	GLASS PANE	
030	2508179-0000		1	RUBBER SEAL	
Common Parts					
050	1129325-0000		1	SEALING FLANGE	
060	1129324-0000		1	WASHER	
310	90157-0041		1	SEALING COMPOUND, RHODORSEAL 5651	
340	90226-0458		3	MOUNTING SCREW	
400	312812-0312		2	HEXAGON NUT, NY-LOCK M4 A480	
500	315105-0136		2	WASHER BRB 4,3X8 RFR	

Pos	Part No	UN	Qty	Description	Page No

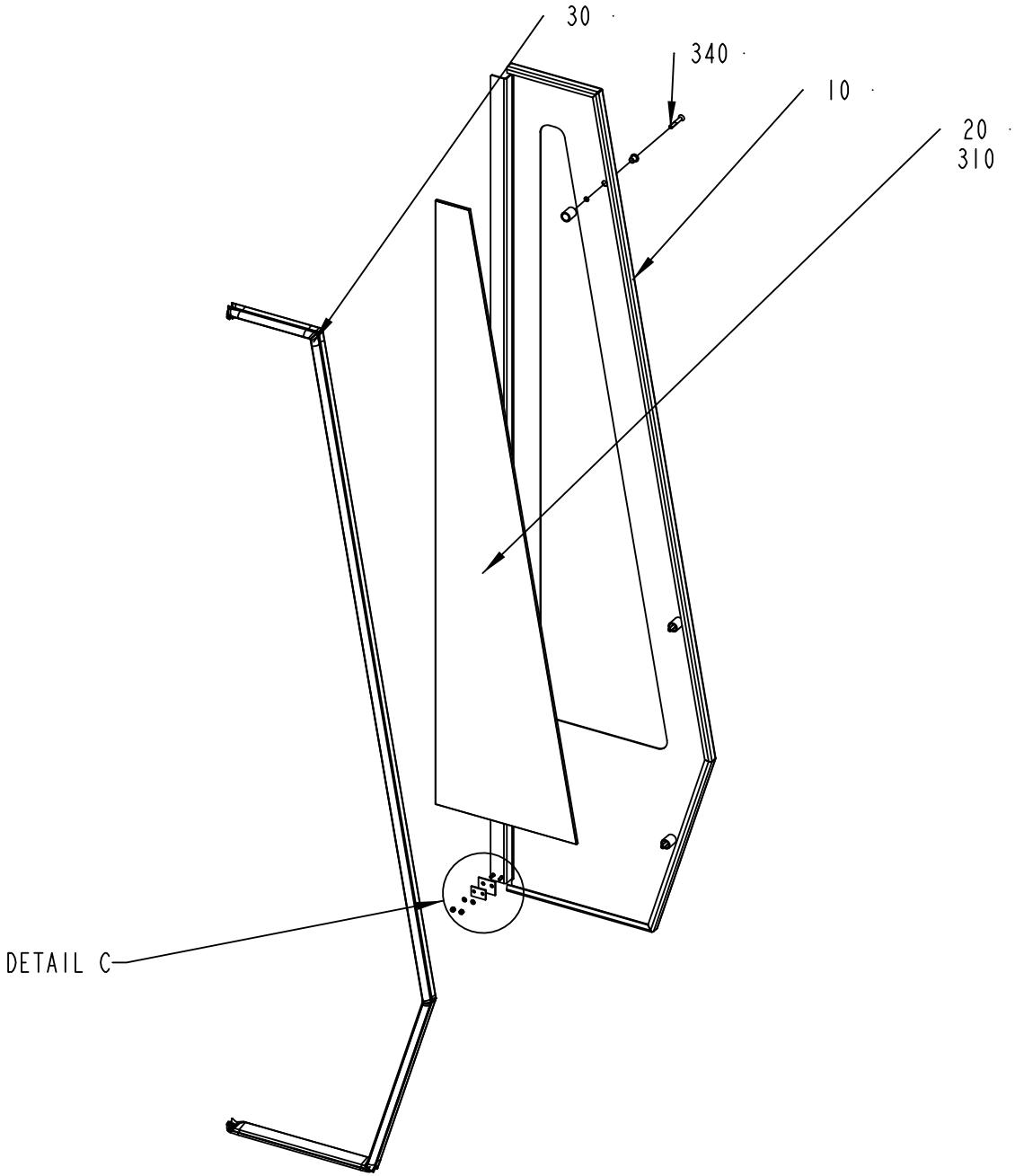

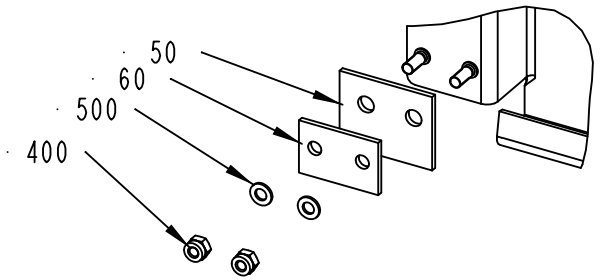

DETAIL C
1:2

2508181-1
313511

ECM: 339761 - 20080402
Group number: 2508181-0100
Assembly Drawing: 2508181-1_1_AC

Pos	Part No	UN	Qty	Description	Page No
A3/FLEX					
010	2508182-0000		1	DOOR	
020	2508180-0002		1	GLASS PANE	
030	2508183-0000		1	RUBBER SEAL	
Common Parts					
050	1129325-0000		1	SEALING FLANGE	
060	1129324-0000		1	WASHER	
310	90157-0041		1	SEALING COMPOUND, RHODORSEAL 5651	
340	90226-0458		3	MOUNTING SCREW	
400	312812-0312		2	HEXAGON NUT, NY-LOCK M4 A480	
500	315105-0136		2	WASHER BRB 4,3X8 RFR	

Pos	Part No	UN	Qty	Description	Page No

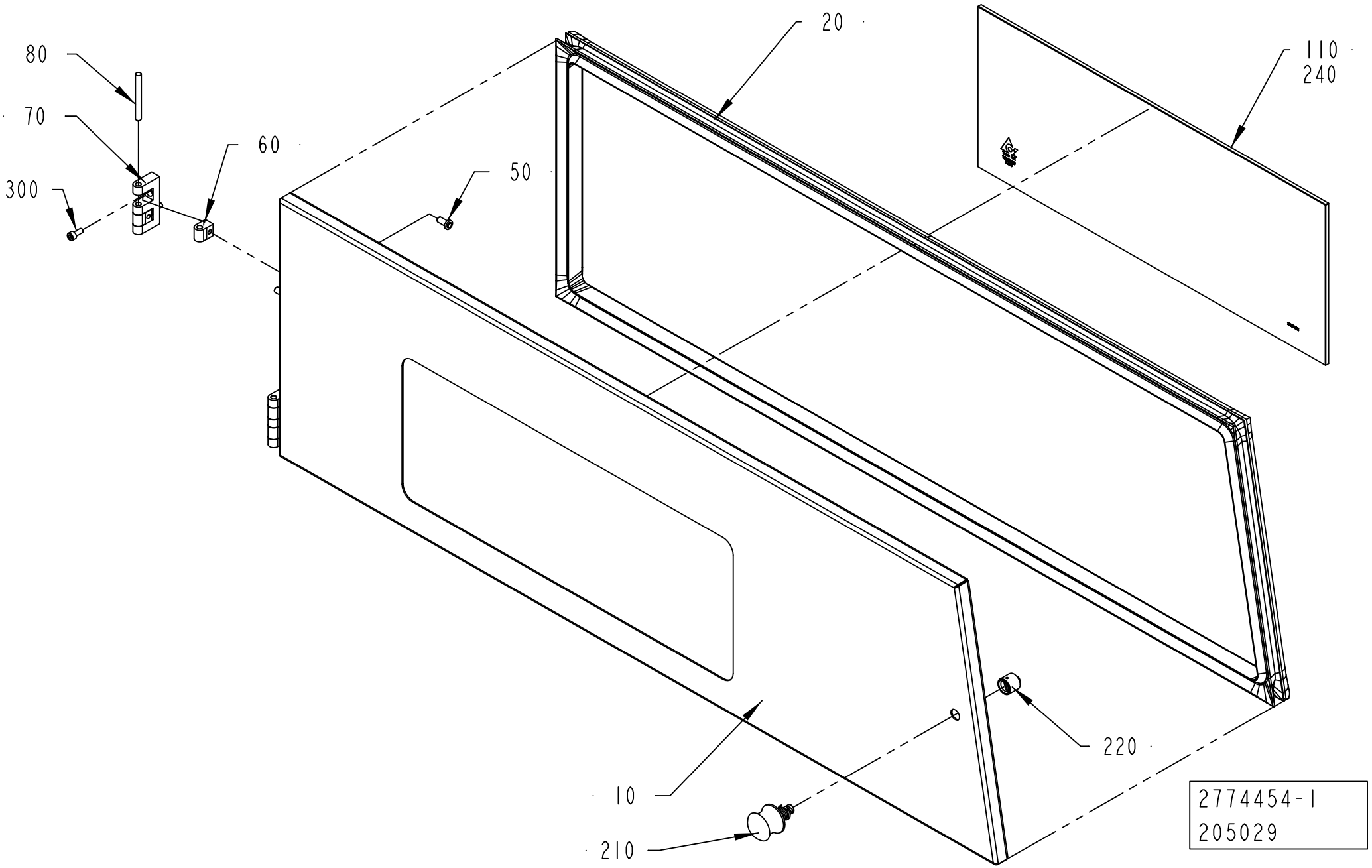
80
70
300
60
50
20
110
240
10
210
220
2774454-1
205029

ECM: 224420 - 20060701
Group number: 2774454-0100
Assembly Drawing: 2774454-1_1_AA

Pos	Part No	UN	Qty	Description	Page No
A3/FLEX					
010	2760963-0000		1	COVER	
110	2530082-0000		1	GLASS PANE	
Common Parts					
040	2760964-0000		1	RUBBER SEAL	
050	1129767-0000		4	SCREW	
060	1129770-0000		4	BLOCKING PIECE	
070	1035792-0000		2	E-HINGE	
080	988685-0000		2	PIN	
210	90237-0079		1	FAST LOCKING BOLT, FSQ -M8	
220	90237-0178		1	FAST LOCKING SOCKET,4-28599, M8	
300	312115-0327		4	SCREW ISO4762 M5X12 A4 80	

Pos	Part No	UN	Qty	Description	Page No

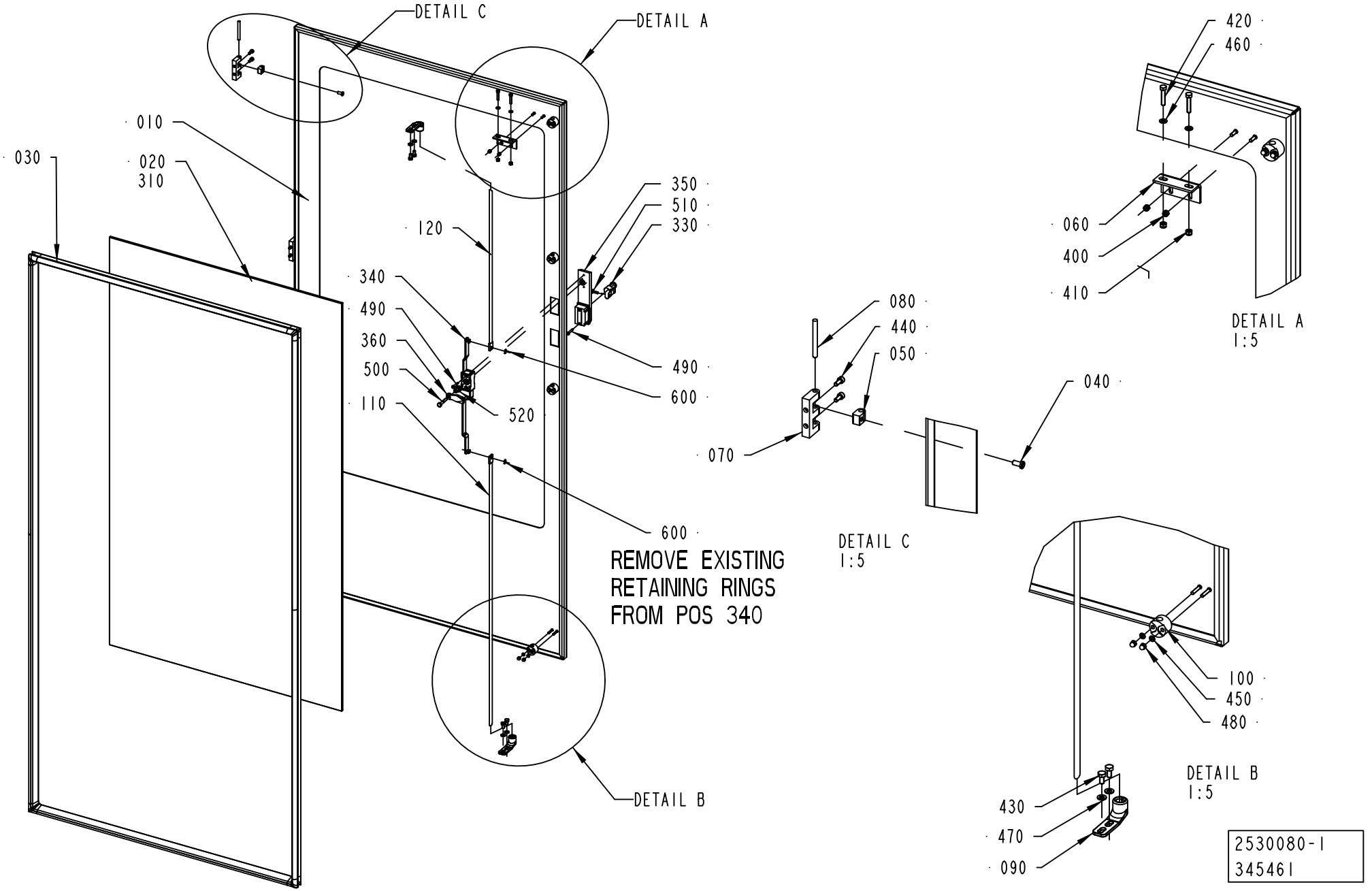
DETAIL C
DETAIL A
010
020
310
030
350
510
330
120
340
490
360
500
110
520
490
600
600
REMOVE EXISTING
RETAINING RINGS
FROM POS 340
DETAIL B
420
460
060
400
410
DETAIL A
1:5
080
440
050
040
070
DETAIL C
1:5
100
450
480
DETAIL B
1:5
430
470
090
2530080-1
345461

ECM: 392007 - 20090701
Group number: 2530080-0100
Assembly Drawing: 2530080-1_1_AD

Pos	Part No	UN	Qty	Description	Page No
A3/FLEX					
010	2530087-0000		1	DOOR	
020	2527640-0000		1	GLASS PANE	
030	2527639-0000		1	RUBBER SEAL	
Common Parts					
040	1129767-0000		3	SCREW	
050	1129770-0000		3	BLOCKING PIECE	
060	1346885-0000		1	SUPPORT	
070	1035792-0000		3	E-HINGE	
080	988685-0000		3	PIN	
090	1538868-0000		2	BRACKET	
100	1129274-0000		4	GUIDE LUG	
110	2508133-0000		1	LOCKING ARM	
120	2508134-0000		1	LOCKING ARM	
310	90157-0041		1	SEALING COMPOUND, RHODORSEAL 5651	
330	90237-0128		1	LOCK CYLINDER, 1109-SU125	
340	90600-8386		1	LOCK HOUSING, 1121-SU887-B	
350	90600-5084		1	LEVER MECHANISM, 1125-SU404	
360	90600-4542		1	LOCK CAM, 1000-227-01	
400	312812-0312		2	HEXAGON NUT, NY-LOCK M4 A480	
410	312812-0314		2	HEXAGON NUT, NY-LOCK M5 A480	
420	312105-0333		2	SCREW M6S ISO 4017 M5X25 A480	
430	312105-0366		4	SCREW M6S ISO 4017 M6X12 A480	
440	312115-0327		6	SCREW ISO4762 M5X12 A4 80	
450	315105-0136		8	WASHER BRB 4,3X8 RFR	
460	315105-0146		2	WASHER BRB 5,3X10 RFR	
470	315105-0153		4	WASHER BRB 6,4X12 RFR	
480	312705-0312		8	NUT HEX. DOMED CAP MHM-6 M4 A280	
490	312504-0348		4	TAPPING SCREW ISO 7049-A2-ST4,2X25-C-Z	
500	312105-0376		1	SCREW M6S ISO 4014 M6X35 A480	
510	312155-0329		1	SCREW DIN 7991 MF6S M5X16 A4 70	
520	90600-8406		1	SPACER, 1000-S1455-SK	
600	315755-0107		2	RETAINING RING SHAFT DIN 6799 5 A2	

Pos	Part No	UN	Qty	Description	Page No

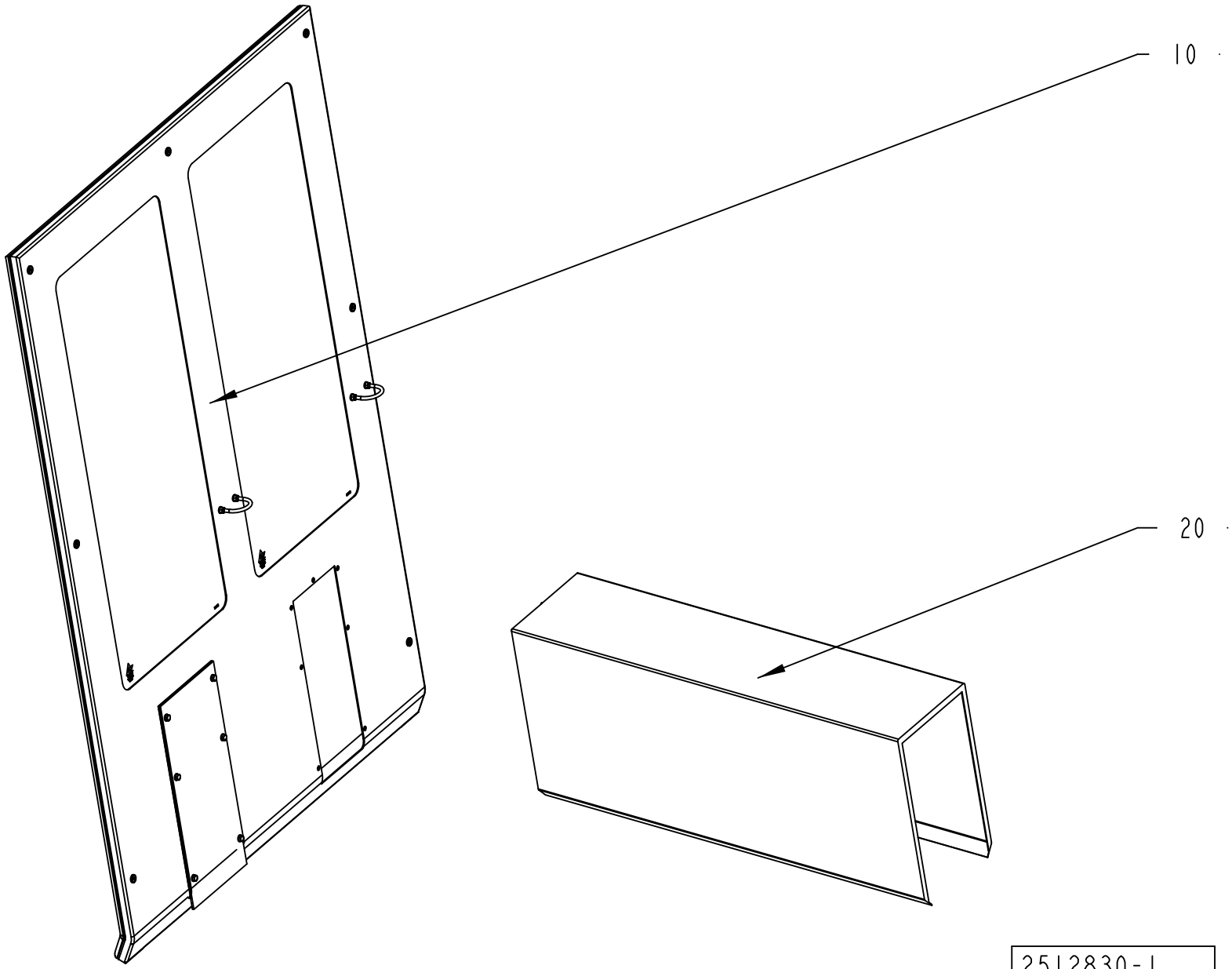

2512830-1
ECM 117743

ECM: 241432 - 20060102
Group number: 2512830-0100
Assembly Drawing: 2512830-1_1_AA

Pos	Part No	UN	Qty	Description	Page No
A3/FLEX					
020	1095738-0300		1	PROTECTIVE COVER	**2-291**
Common Parts					
010	2517062-0100		1	FRONT COVER	**2-293**

Pos	Part No	UN	Qty	Description	Page No

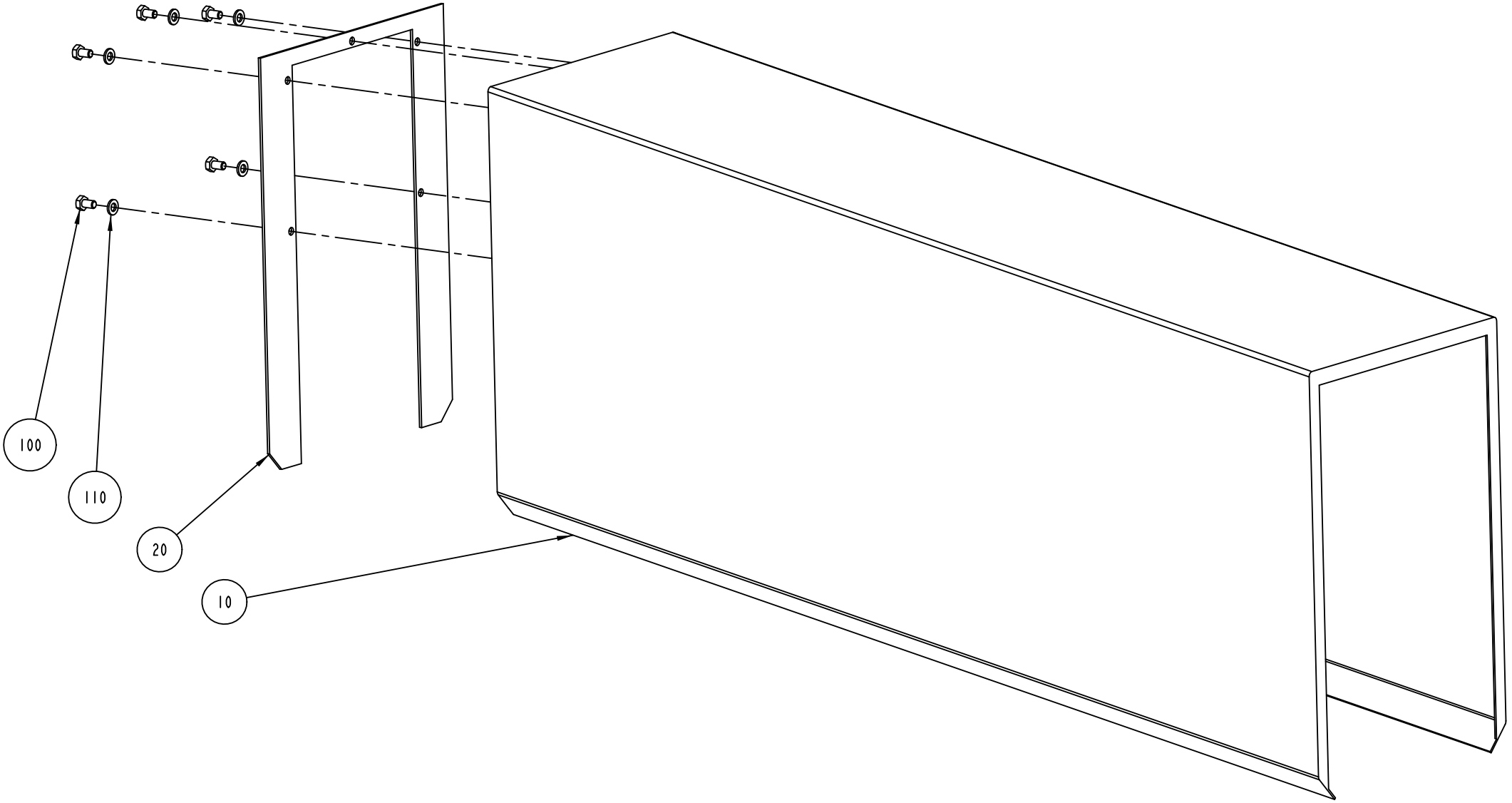

S-1095738-3
ECN 72400

ECM: 189928 - 20041104
Group number: 1095738-0300
Assembly Drawing: 1095738-3_1_AB

Pos	Part No	UN	Qty	Description	Page No
-					
010	1296289-0000		1	TUNNEL	
020	1296290-0000		1	GASKET	
100	312105-0364		5	SCREW M6S ISO 4017 M6X10 A480	
110	315105-0153		5	WASHER BRB 6,4X12 RFR	

Pos	Part No	UN	Qty	Description	Page No

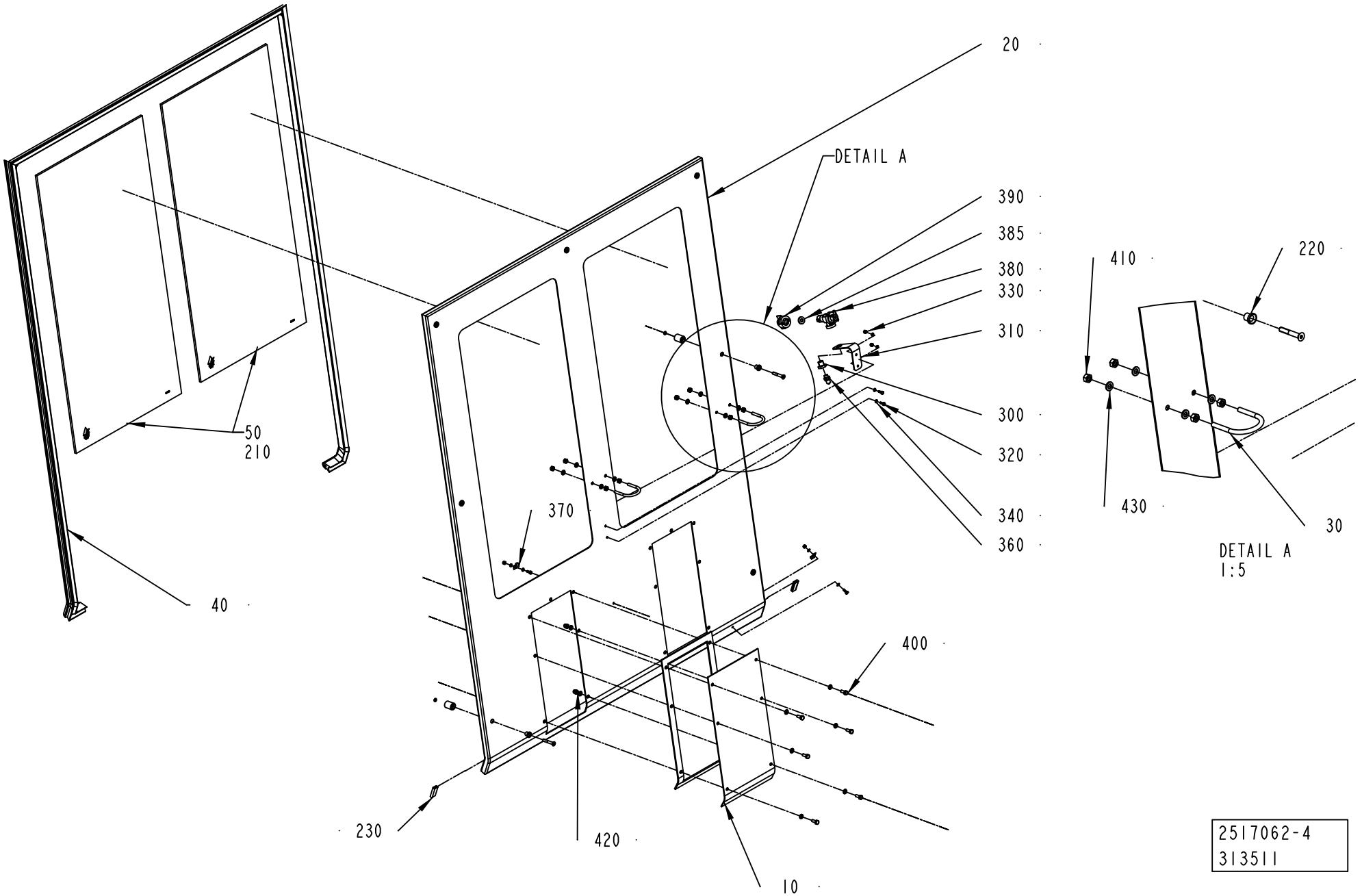
20
DETAIL A
390
385
380
330
310
300
320
340
360
50
210
40
370
400
230
420
10
410
220
430
30
DETAIL A
1:5
2517062-4
313511

ECM: 339753 - 20080402
Group number: 2517062-0100
Assembly Drawing: 2517062-4_1_AC

Pos	Part No	UN	Qty	Description	Page No
A3/FLEX					
010	1296218-0200		1	LID	**2-295**
020	2514830-0000		1	FRONT COVER	
040	2514831-0000		1	SEALING STRIP	
050	2514832-0000		2	GLASS PANE	
300	532413-0000		1	REDUCING NIPPLE	
310	2634536-0000		1	SUPPORT	
320	312105-0291		4	SCREW M6S ISO 4017 M4X12 A470	
330	312810-0312		4	HEXAGON NUT, NY-LOCK M4 FZB	
340	315105-0136		8	WASHER BRB 4,3X8 RFR	
360	342921-0113		1	STRAIGHT COUPLING,EXT.THREADED 6/4-G1/8"	
370	90165-0057		2	PIPE CLIP FOR TUBE D=6 MM	
380	90230-0027		1	NON-RETURN VALVE QJ 8355-1/4"	
	90230-0301		*1*	*DIAPHRAGM*	
	90230-0300		*1*	*STRAINER*	
385	90005-0094		1	GASKET C 19438-EPR	
390	534310-0001		1	NOZZLE	
400	312105-0368		6	SCREW M6S ISO 4017 M6X16 A480	
410	312605-0316		8	HEXAGON NUT, M6M M6 A280	
430	315105-0153		20	WASHER BRB 6,4X12 RFR	
Common Parts					
030	531616-0000		2	HOLDER	
210	90157-0041	L	1	SEALING COMPOUND, RHODORSEAL 5651	
220	90226-0458		7	MOUNTING SCREW	
230	90143-0097	MM	70	SELF GRIPPING GASKET, 1011-24	
420	312705-0316		6	NUT HEX. DOMED CAP MHM-6 M6 A280	

Pos	Part No	UN	Qty	Description	Page No

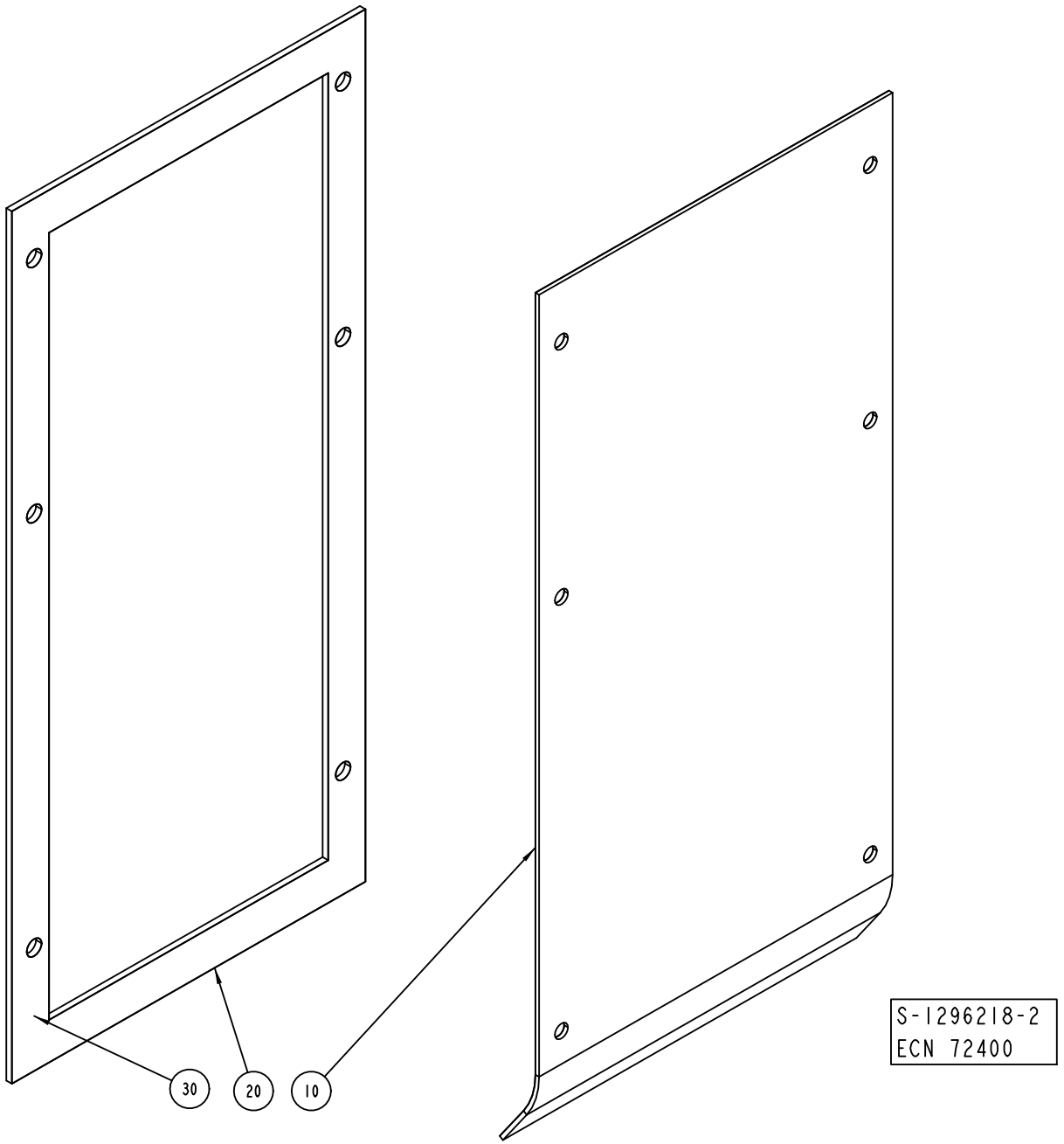
30
20
10
S-1296218-2
ECN 72400

ECM: 72400 - 19990430
Group number: 1296218-0200
Assembly Drawing: 1296218-2_1_AA

Pos	Part No	UN	Qty	Description	Page No
-					
010	1478389-0000		1	COVERING PLATE	
020	1478391-0000		1	GASKET	
030	90157-0041		1	SEALING COMPOUND, RHODORSEAL 5651	

Pos	Part No	UN	Qty	Description	Page No

FRONT GUARD

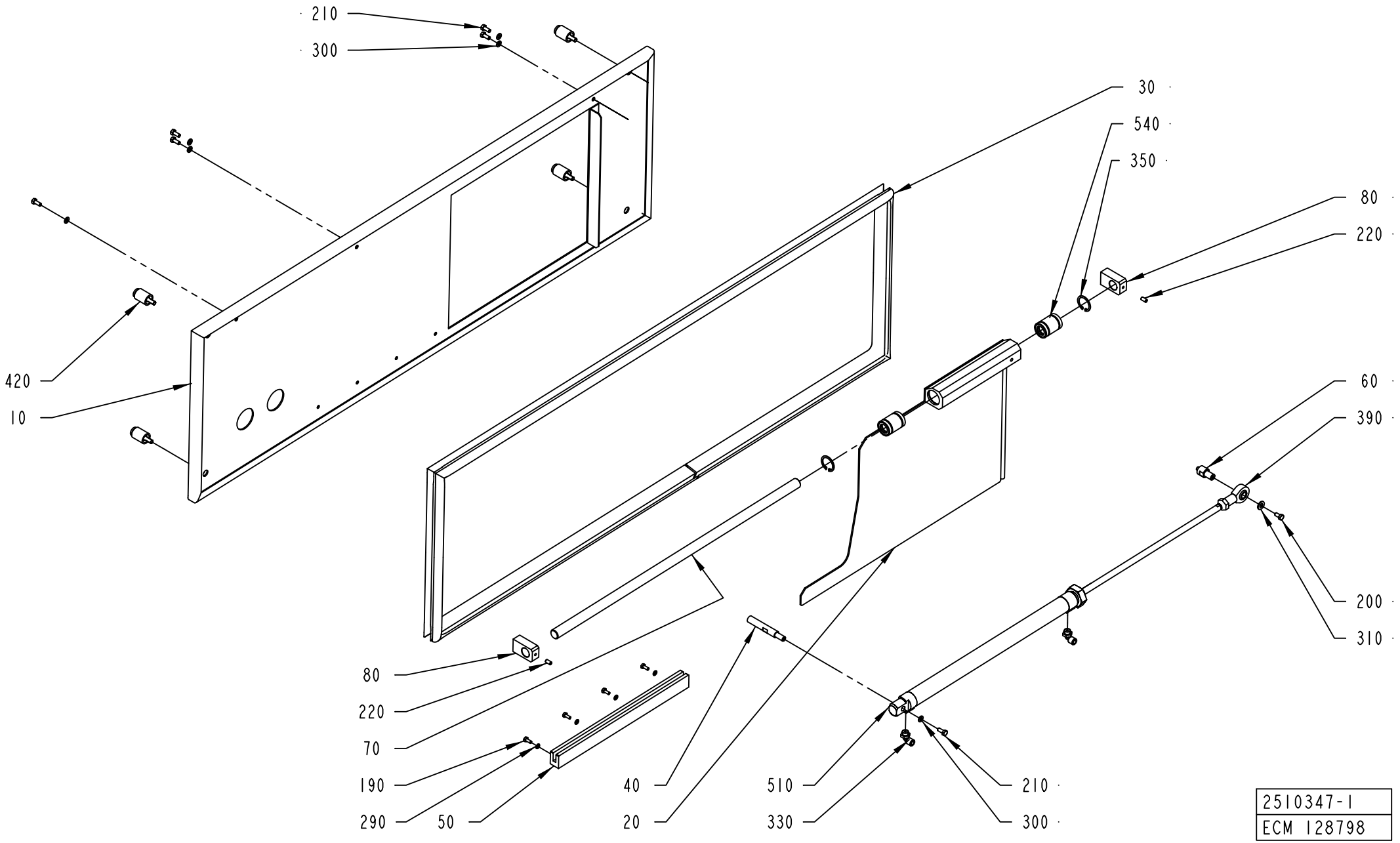
210
300
30
540
350
80
220
420
10
60
390
200
310
80
220
70
190
290
50
40
20
510
330
210
300
2510347-1
ECM 128798

ECM: 265964 - 20060510
Group number: 2510347-0100
Assembly Drawing: 2510347-1_1_AB

Pos	Part No	UN	Qty	Description	Page No
A3/FLEX					
030	2510349-0000		1	SEALING STRIP	
Common Parts					
010	2510348-0000		1	COVER	
020	2510352-0000		1	DOOR	
040	2510355-0000		1	SHAFT	
050	2510353-0000		1	GUIDE	
060	2510354-0000		1	PIN	
070	2510351-0000		1	SHAFT	
080	2510350-0000		2	SUPPORT	
190	312105-0289		4	SCREW M6S H4X10 A4 70 ISO4017/DIN933	
200	312101-0325		1	SCREW M6S M5X10 FZB	
210	312105-0327		6	SCREW M6S ISO 4017 M5X12 A480	
220	312318-0325		2	SCREW ISO4029 M5X10 A4	
290	315105-0136		4	WASHER BRB 4,3X8 RFR	
300	315105-0146		10	WASHER BRB 5,3X10 RFR	
310	315105-0156		1	WASHER BRB 6,7X14 RFR	
330	90458-2956		2	ELBOW PIPE JOINT, EXT.THREAD, D=6MM-G1/8	
350	90458-0506		2	RETAINING RING FOR BORE DIN 472 26 A2	
390	90115-0134		1	ROD END, ID=10 MM, M10X1,25	
420	90226-0458		4	MOUNTING SCREW	
510	90459-0401		1	DOUBLE ACTING, MINI-ISO, CYL. 25-320	
540	90189-0011		2	BALL BUSHING, 16X26X36 MM	

Pos	Part No	UN	Qty	Description	Page No

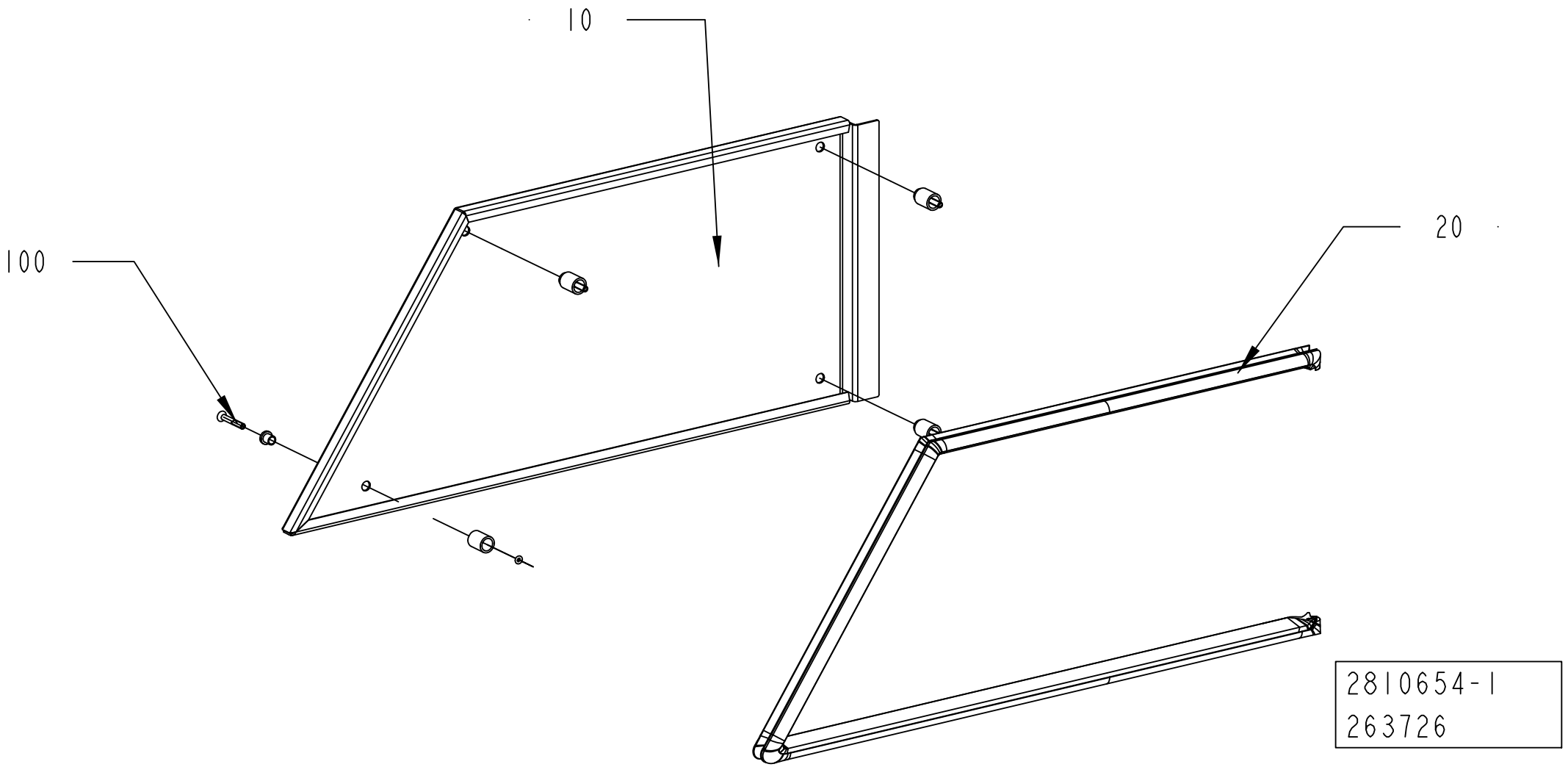
10
100
20
2810654-1
263726

ECM: 263726 - 20060702
Group number: 2810654-0100
Assembly Drawing: 2810654-1_1_AA

Pos	Part No	UN	Qty	Description	Page No
-					
010	2810660-0000		1	COVER	
020	2812728-0000		1	RUBBER SEAL	
100	90226-0458		4	MOUNTING SCREW	

Pos	Part No	UN	Qty	Description	Page No

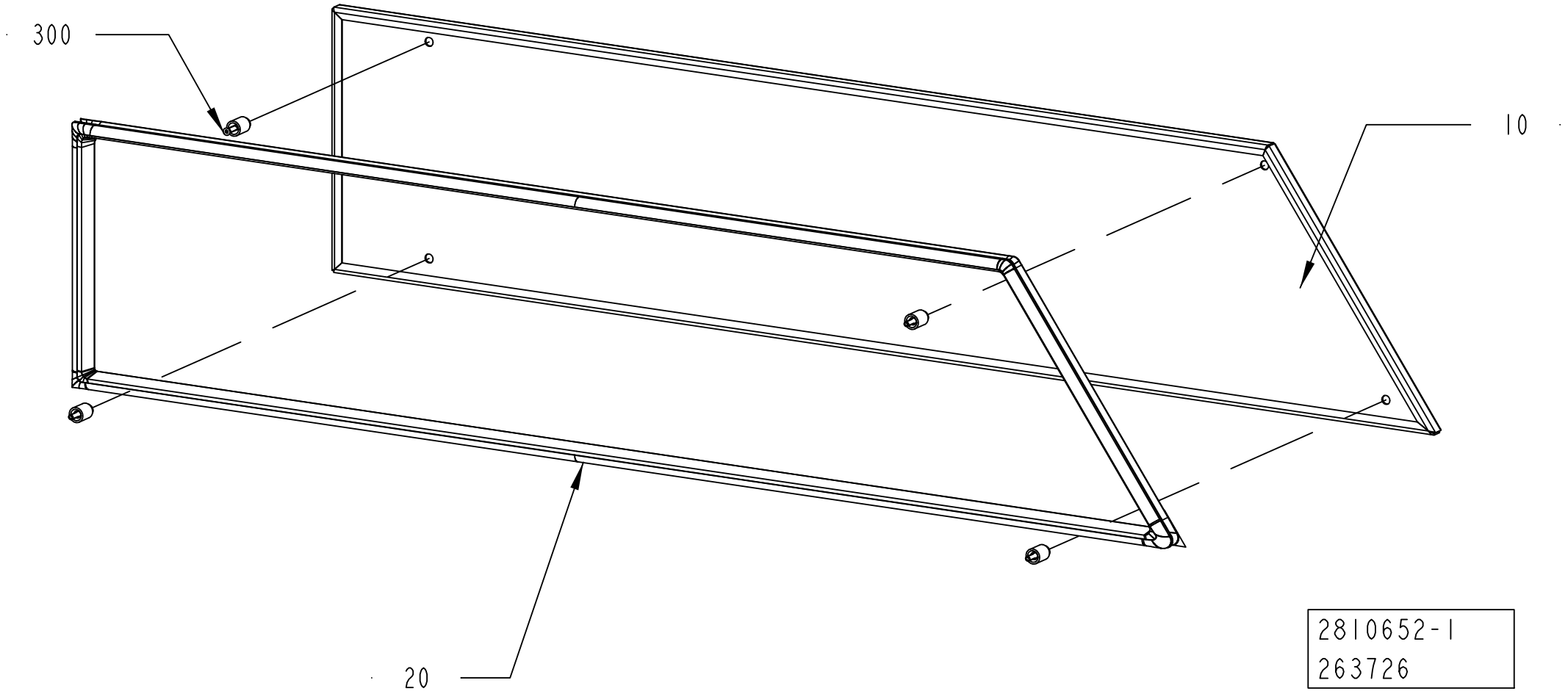
300
10
20
2810652-1
263726

ECM: 263726 - 20060702
Group number: 2810652-0100
Assembly Drawing: 2810652-1_1_AA

Pos	Part No	UN	Qty	Description	Page No
-					
010	2810663-0000		1	COVER	
020	2812727-0000		1	RUBBER SEAL	
100	90226-0458		4	MOUNTING SCREW	

Pos	Part No	UN	Qty	Description	Page No

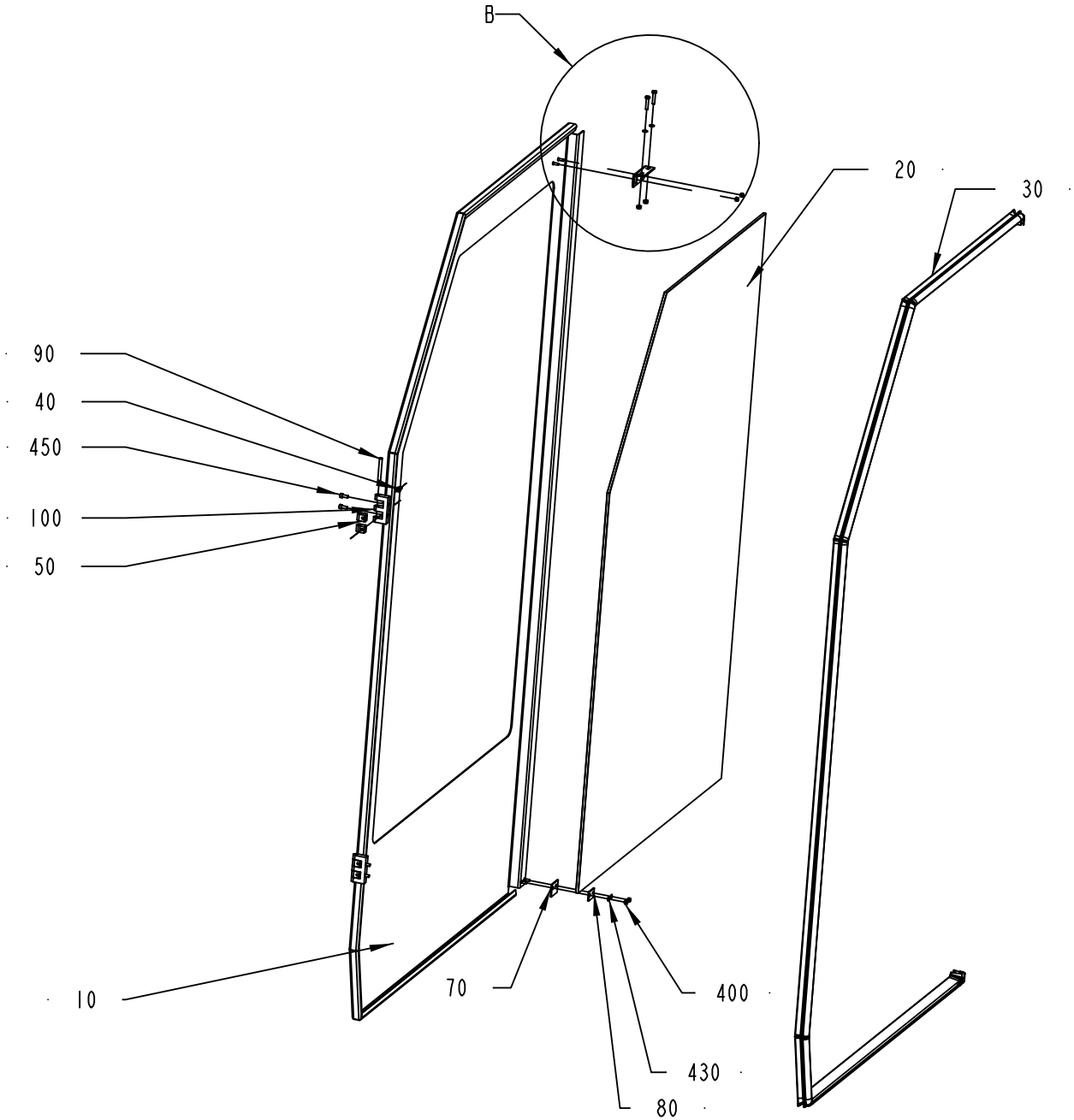

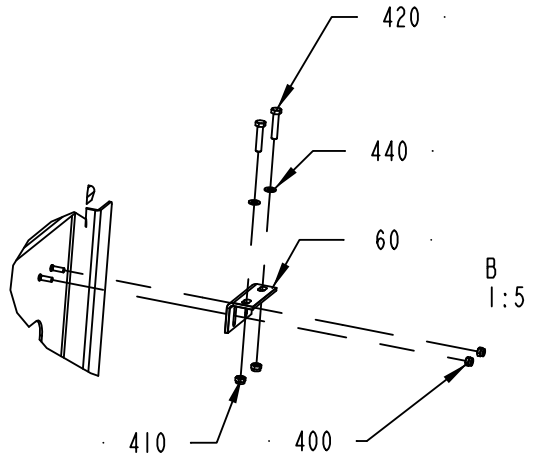

1:10

2810651-1
263726

ECM: 263726 - 20060702
Group number: 2810651-0100
Assembly Drawing: 2810651-1_1_AA

Pos	Part No	UN	Qty	Description	Page No
-					
010	2810661-0000		1	DOOR	
020	2810670-0000		1	GLASS PANE	
030	2813335-0000		1	RUBBER SEAL	
040	1129767-0000		4	SCREW	
050	1129770-0000		4	BLOCKING PIECE	
060	1346885-0000		1	SUPPORT	
070	1129325-0000		1	SEALING FLANGE	
080	1129324-0000		1	WASHER	
090	988685-0000		2	PIN	
100	1035792-0000		2	E-HINGE	
310	90157-0041		1	SEALING COMPOUND, RHODORSEAL 5651	
400	312812-0312		4	HEXAGON NUT, NY-LOCK M4 A480	
410	312812-0314		2	HEXAGON NUT, NY-LOCK M5 A480	
420	312105-0333		2	SCREW M6S ISO 4017 M5X25 A480	
430	315105-0136		2	WASHER BRB 4,3X8 RFR	
440	315105-0146		2	WASHER BRB 5,3X10 RFR	
450	312115-0327		4	SCREW ISO4762 M5X12 A4 80	

Pos	Part No	UN	Qty	Description	Page No

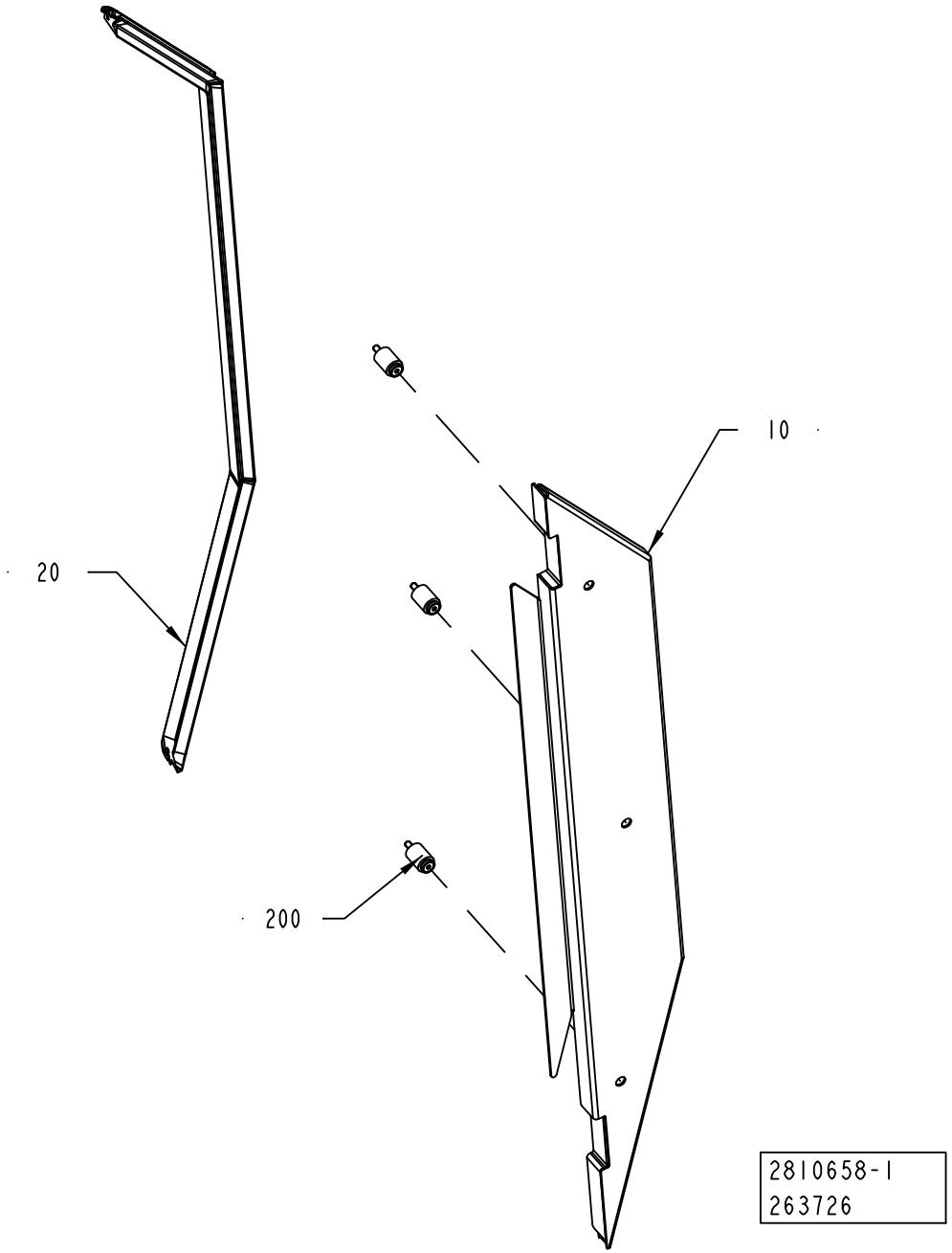
10
20
200
2810658-1
263726

ECM: 263726 - 20060702
Group number: 2810658-0100
Assembly Drawing: 2810658-1_1_AA

Pos	Part No	UN	Qty	Description	Page No
-					
010	2810662-0000		1	COVER	
020	2813877-0000		1	RUBBER SEAL	
100	90226-0458		3	MOUNTING SCREW	

Pos	Part No	UN	Qty	Description	Page No

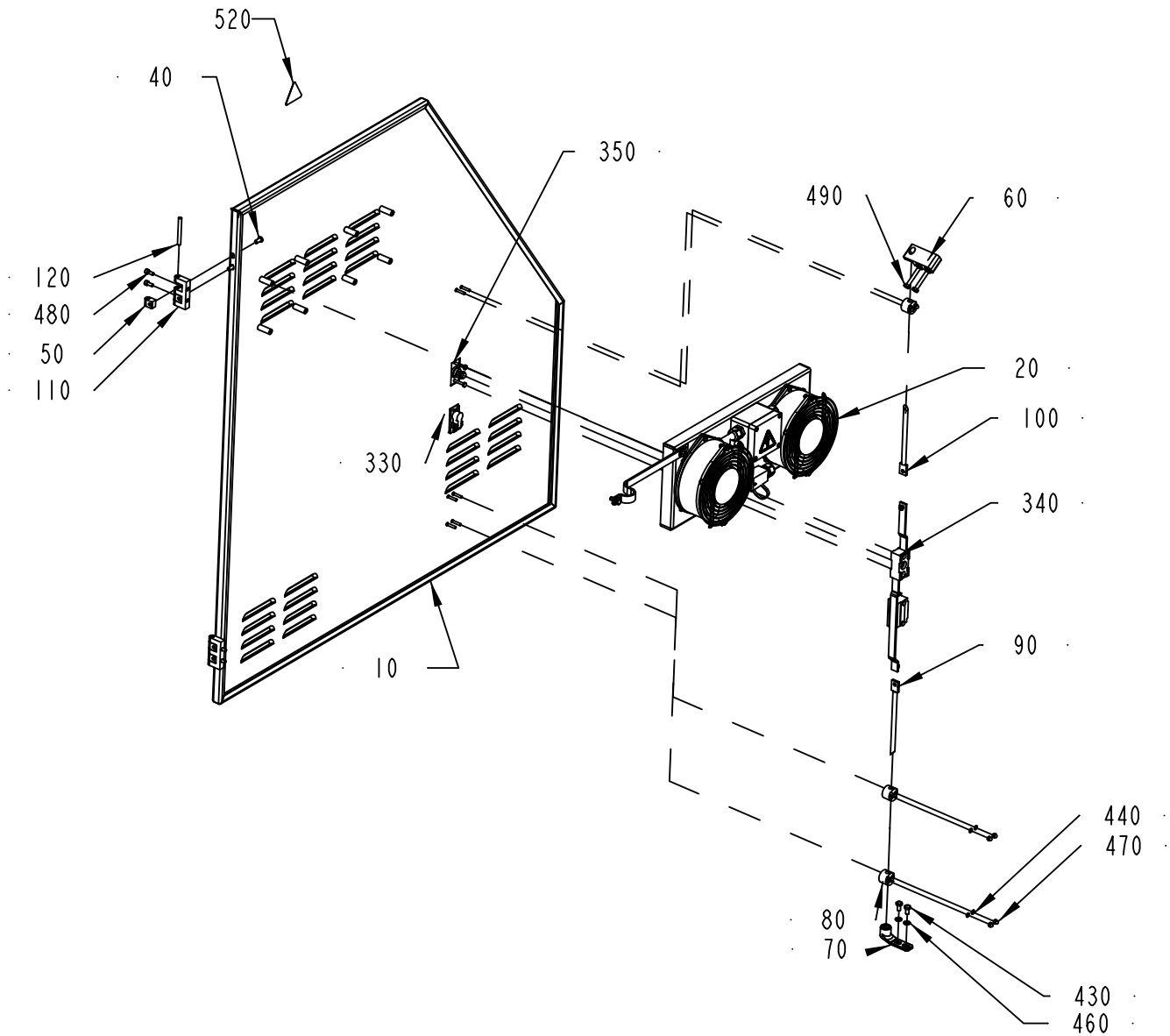
520
40
350
490
60
120
480
50
110
20
100
330
340
90
10
440
470
80
70
430
460

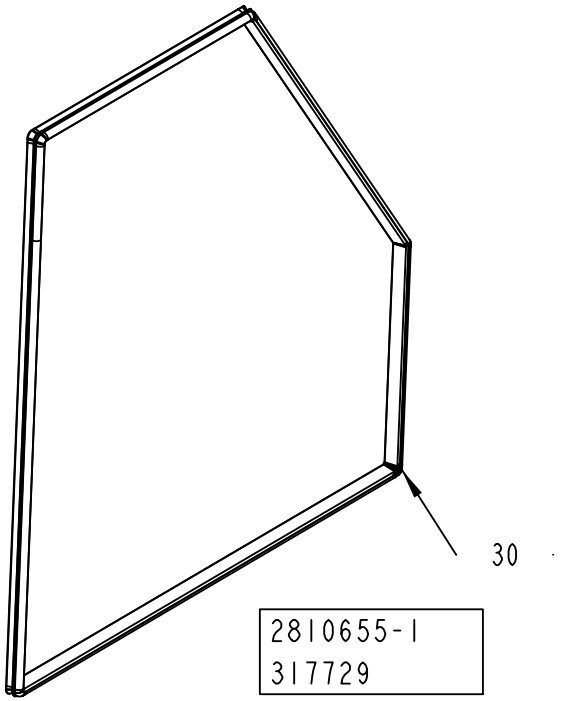
30
2810655-1
317729

ECM: 340592 - 20080403
Group number: 2810655-0100
Assembly Drawing: 2810655-1_1_AC

Pos	Part No	UN	Qty	Description	Page No
-					
010	2810665-0000		1	DOOR	
020	2921007-0100		1	FAN SYSTEM	**2-309**
030	2813875-0000		1	RUBBER SEAL	
040	1129767-0000		4	SCREW	
050	1129770-0000		4	BLOCKING PIECE	
060	2812190-0000		1	SUPPORT	
070	1538868-0000		1	BRACKET	
080	1129274-0000		3	GUIDE LUG	
090	2812192-0000		1	LOCKING ARM	
100	2812191-0000		1	LOCKING ARM	
110	1035792-0000		2	E-HINGE	
120	988685-0000		2	PIN	
330	90237-0129		1	LOCK CYLINDER, 1109-U6	
340	90237-0153		1	LOCK HOUSING, 1121-U26-0B	
350	90237-0176		1	TURNING HANDLE, 1125-U190-A	
430	312105-0366		2	SCREW M6S ISO 4017 M6X12 A480	
440	315105-0136		6	WASHER BRB 4,3X8 RFR	
460	315105-0153		4	WASHER BRB 6,4X12 RFR	
470	312705-0312		6	NUT HEX. DOMED CAP MHM-6 M4 A280	
480	312115-0327		4	SCREW ISO4762 M5X12 A4 80	
490	312105-0378		2	SCREW M6S ISO 4014 M6X40 A480	
520	359705-0015		1	WARNING SIGN ISO, RISK OF ELECTRIC SHOCK	

Pos	Part No	UN	Qty	Description	Page No

Machine Type | Group Description | Used-In | Group Number | Page No

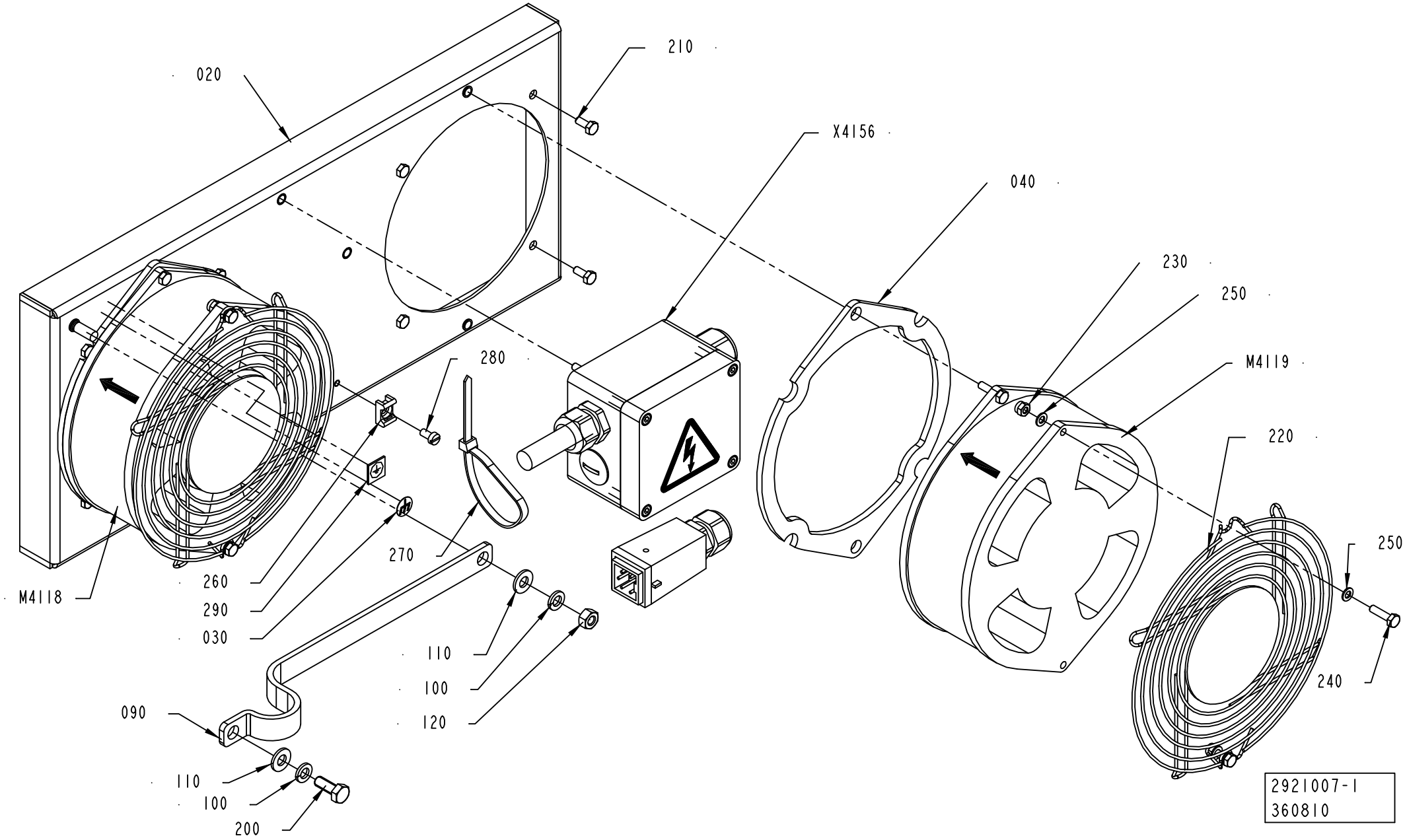
020
210
X4156
040
230
250
M4119
220
250
240
280
270
260
290
030
M4118
110
100
120
090
110
100
200
2921007-1
360810

ECM: 366167 - 20081002
Group number: 2921007-0100
Assembly Drawing: 2921007-1_1_AB

Pos	Part No	UN	Qty	Description	Page No
-					
020	2886762-0000		1	COVER PLATE	
030	2608177-0000		1	SIGN	
040	2891457-0000		2	SPACER	
090	90135-0044		1	EARTH WIRE, L=320 MM 16 MM2	
100	315402-0156		2	LOCK WASHER FBB 6,5	
110	315105-0156		2	WASHER BRB 6,7X14 RFR	
120	312605-0316		1	HEXAGON NUT, M6M M6 A280	
200	312105-0368		1	SCREW M6S ISO 4017 M6X16 A480	
210	312105-0289		8	SCREW M6S H4X10 A4 70 ISO4017/DIN933	
220	90459-1993		2	FINGERGUARD, 101116-03	
230	312812-0312		4	HEXAGON NUT, NY-LOCK M4 A480	
240	312105-0293		8	SCREW M6S ISO 4017 M4X16 A470	
250	315105-0136		8	WASHER BRB 4,3X8 RFR	
260	352113-0205		1	ANCHOR PLATES FOR STRIPS, TYPE TM2S8-C10	
270	352113-0102		1	CABLE TIE, BLACK 188X4,8 MM	
280	312125-0287		1	SCREW ISO 1207 M4X8 A4	
290	90194-0152		1	SIGN, EARTH	
M4118	90264-0055		1	FAN / W25 130-AA 03-01	
M4119	90264-0055		1	FAN / W25 130-AA 03-01	
X4156	2920985-0100		1	CONNECTION BOX	**2-311**

Pos	Part No	UN	Qty	Description	Page No

Machine Type | Group Description | Used-In | Group Number | Page No

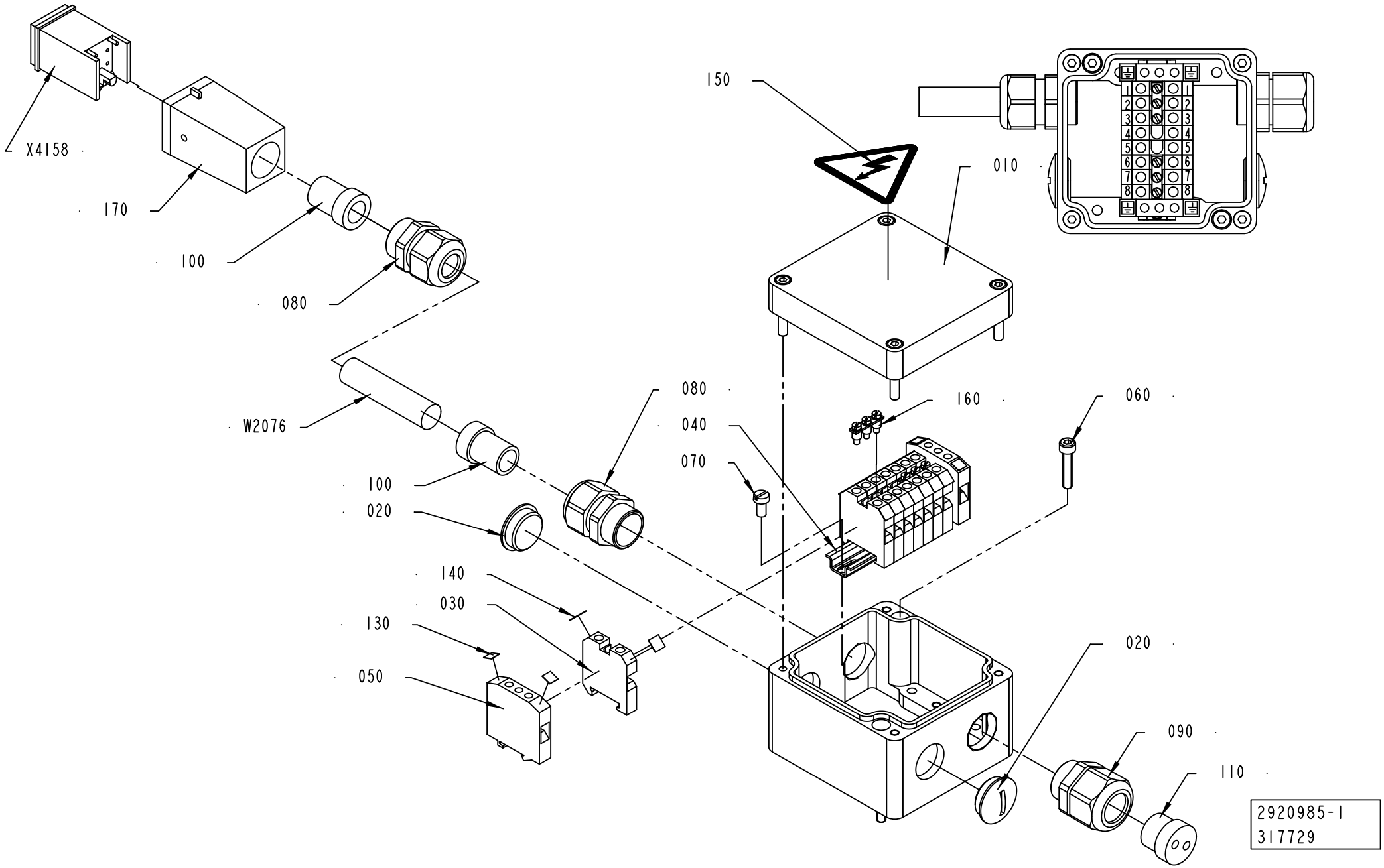
X4158
170
100
080
150
010
W2076
080
040
070
160
060
100
020
140
030
130
050
020
090
110
2920985-1
317729

ECM: 344064 - 20080403
Group number: 2920985-0100
Assembly Drawing: 2920985-1_1_AA

Pos	Part No	UN	Qty	Description	Page No
-					
010	1349568-0000		1	CONNECTION BOX	
020	90002-0009		2	BLANK-OFF PLUG, PR 18.6 SKINDICHT-BLK11	
030	90077-0079		8	FEED THROUGH TERMINAL, 02943.6	
040	90077-0328	MM	65	RAIL TS15/5	
050	90135-0026		2	EARTH TERMINAL, 3802.6	
060	312115-0295		2	SCREW ISO4762 M4X20 A4 80	
070	312125-0287		2	SCREW ISO 1207 M4X8 A4	
080	353240-0002		2	GLAND W/O INSERT PG11 NORMAL	
090	353241-0002		1	GLAND W/O INSERT PG11 EXTENDED	
100	353249-0003		2	INSERT, SINGLE HOLE, E151/11	
110	353249-0036		1	INSERT, MULTI HOLE, EK152 M 2X4	
130	359011-0819		4	MARKING PLATES 5-GW (EARTH)	
140	359011-0821		2	SET OF SIGNS 6-FW 1-50	
150	359705-0015		1	WARNING SIGN ISO, RISK OF ELECTRIC SHOCK	
160	353034-0402		2	BRIDGE CONNECTOR Q3, 13126.0	
170	90110-0371		1	COVER, HDC-HA-3-TOVL1/11165247-A/1	
W2076	351150-0412	MM	700	CABLE OLFLEX 3X1,5 MM2 LIGHT/GREY	
X4158	90459-2412		1	CONNECTOR 4 POLE + EARTH	

Pos	Part No	UN	Qty	Description	Page No

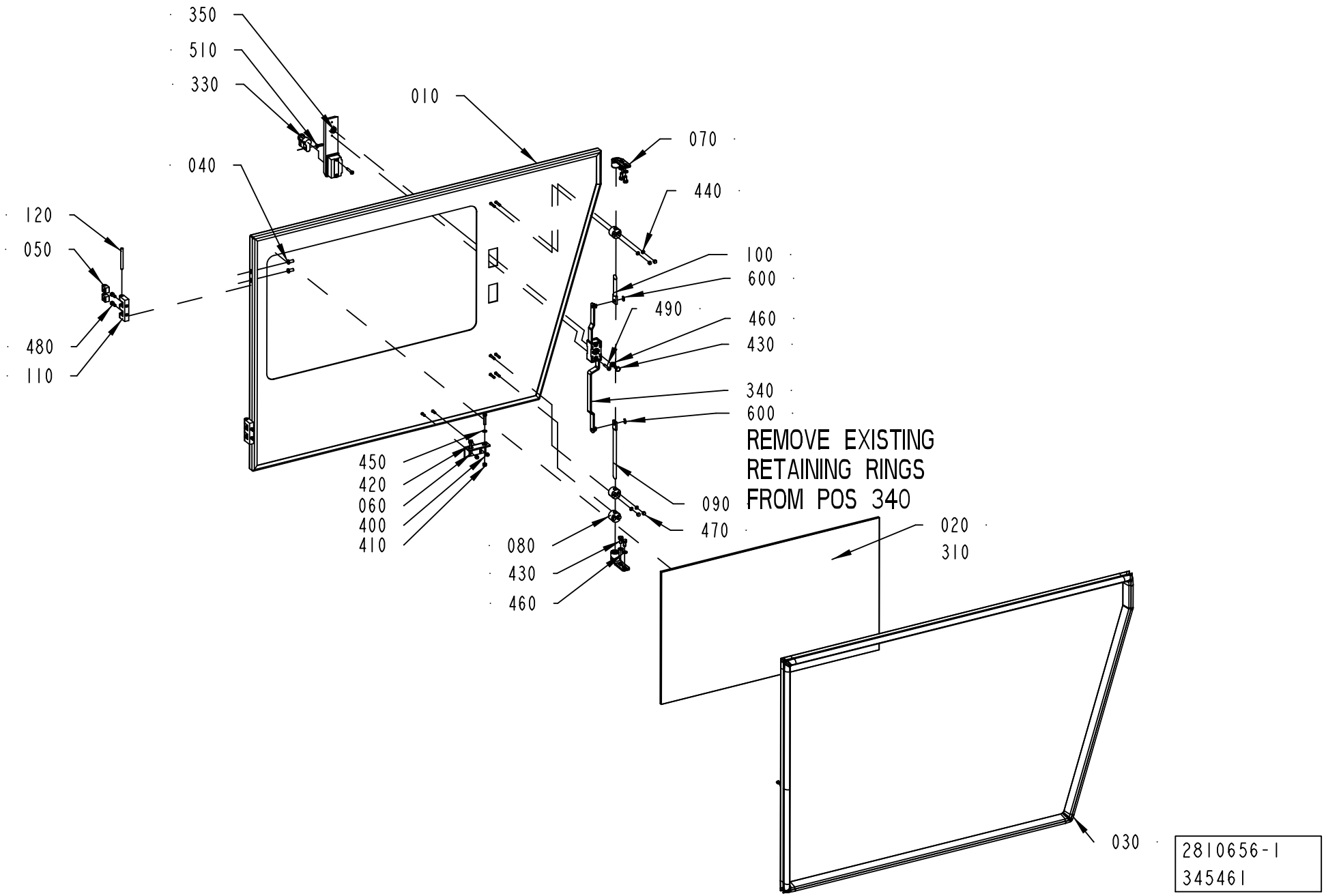
350
510
330
010
070
040
440
120
100
050
600
490
460
480
430
110
340
600
450
420
060
400
410
090
470
080
430
460
020
310
030
REMOVE EXISTING
RETAINING RINGS
FROM POS 340
2810656-1
345461

ECM: 392010 - 20090701
Group number: 2810656-0100
Assembly Drawing: 2810656-1_1_AC

Pos	Part No	UN	Qty	Description	Page No
-					
010	2810666-0000		1	DOOR	
020	2810668-0000		1	GLASS PANE	
030	2813876-0000		1	RUBBER SEAL	
040	1129767-0000		4	SCREW	
050	1129770-0000		4	BLOCKING PIECE	
060	1346885-0000		1	SUPPORT	
070	1538868-0000		2	BRACKET	
080	1129274-0000		3	GUIDE LUG	
090	2812192-0000		1	LOCKING ARM	
100	2812196-0000		1	LOCKING ARM	
110	1035792-0000		2	E-HINGE	
120	988685-0000		2	PIN	
310	90157-0041		1	SEALING COMPOUND, RHODORSEAL 5651	
330	90237-0128		1	LOCK CYLINDER, 1109-SU125	
340	90600-8386		1	LOCK HOUSING, 1121-SU887-B	
350	90600-5084		1	LEVER MECHANISM, 1125-SU404	
400	312812-0312		2	HEXAGON NUT, NY-LOCK M4 A480	
410	312812-0314		2	HEXAGON NUT, NY-LOCK M5 A480	
420	312105-0333		2	SCREW M6S ISO 4017 M5X25 A480	
430	312105-0366		5	SCREW M6S ISO 4017 M6X12 A480	
440	315105-0136		6	WASHER BRB 4,3X8 RFR	
450	315105-0146		2	WASHER BRB 5,3X10 RFR	
460	315105-0153		5	WASHER BRB 6,4X12 RFR	
470	312705-0312		6	NUT HEX. DOMED CAP MHM-6 M4 A280	
480	312115-0327		4	SCREW ISO4762 M5X12 A4 80	
490	312504-0348		4	TAPPING SCREW ISO 7049-A2-ST4,2X25-C-Z	
510	312155-0329		1	SCREW DIN 7991 MF6S M5X16 A4 70	
600	315755-0107		2	RETAINING RING SHAFT DIN 6799 5 A2	

Pos	Part No	UN	Qty	Description	Page No

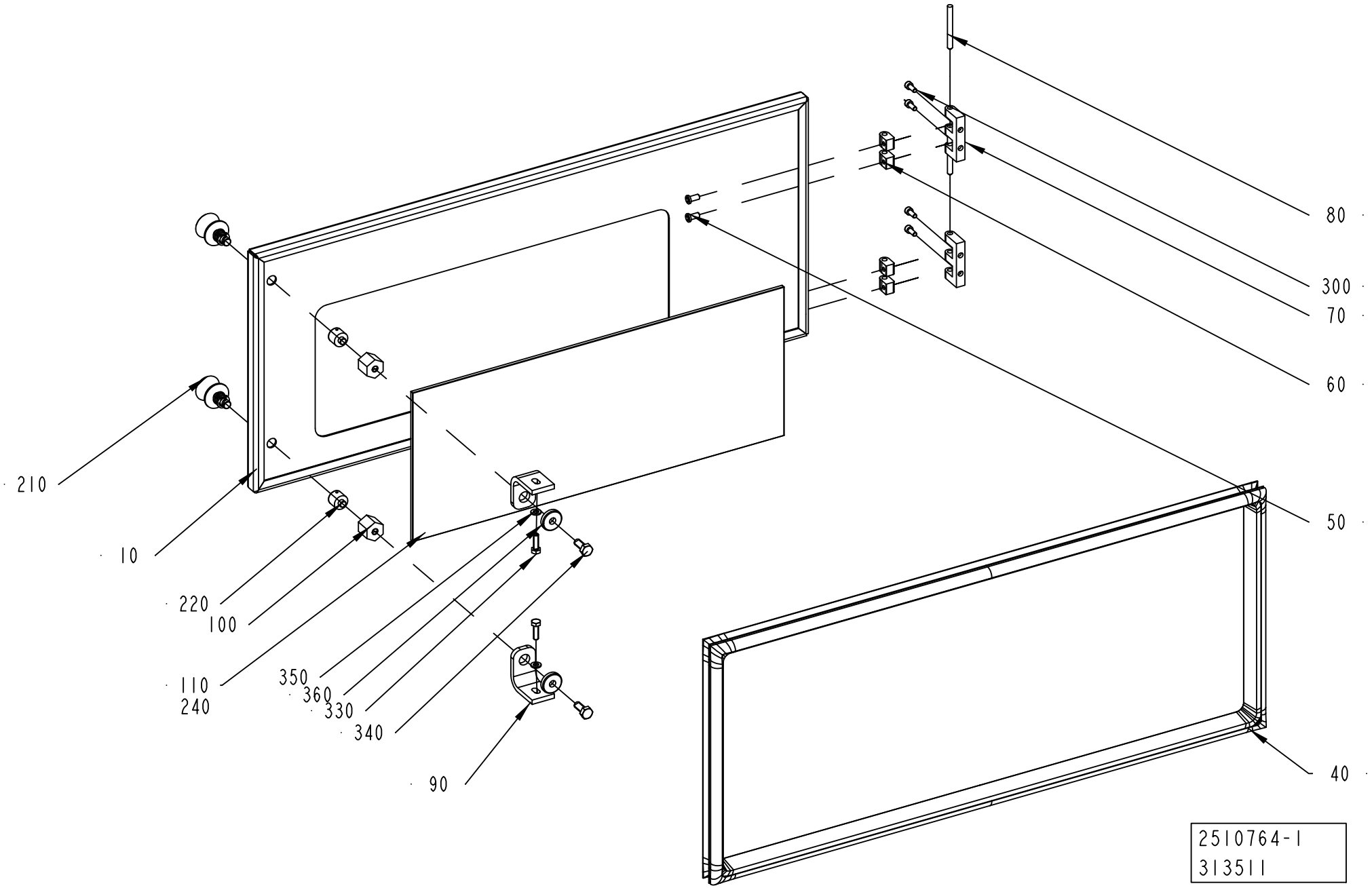
80
300
70
60
210
10
220
100
110
240
350
360
330
340
90
50
40
2510764-1
313511

ECM: 339762 - 20080402
Group number: 2510764-0100
Assembly Drawing: 2510764-1_1_AC

Pos	Part No	UN	Qty	Description	Page No
-					
010	2510765-0000		1	COVER	
040	2510784-0000		1	RUBBER SEAL	
050	1129767-0000		4	SCREW	
060	1129770-0000		4	BLOCKING PIECE	
070	1035792-0000		2	E-HINGE	
080	988685-0000		2	PIN	
090	1040991-0000		2	ANGLE	
100	1040992-0000		2	SPACER NUT	
110	2530082-0000		1	GLASS PANE	
210	90237-0079		2	FAST LOCKING BOLT, FSQ -M8	
220	90237-0178		2	FAST LOCKING SOCKET,4-28599, M8	
240	90157-0041		1	SEALING COMPOUND, RHODORSEAL 5651	
300	312115-0327		4	SCREW ISO4762 M5X12 A4 80	
330	312105-0370		2	SCREW M6S ISO 4017 M6X20 A480	
340	312105-0451		2	SCREW M6S ISO 4017 M8X20 A480	
350	315105-0153		2	WASHER BRB 6,4X12 RFR	
360	315125-0165		2	WASHER TBRSB 8,4X26X5 A4	

Pos	Part No	UN	Qty	Description	Page No

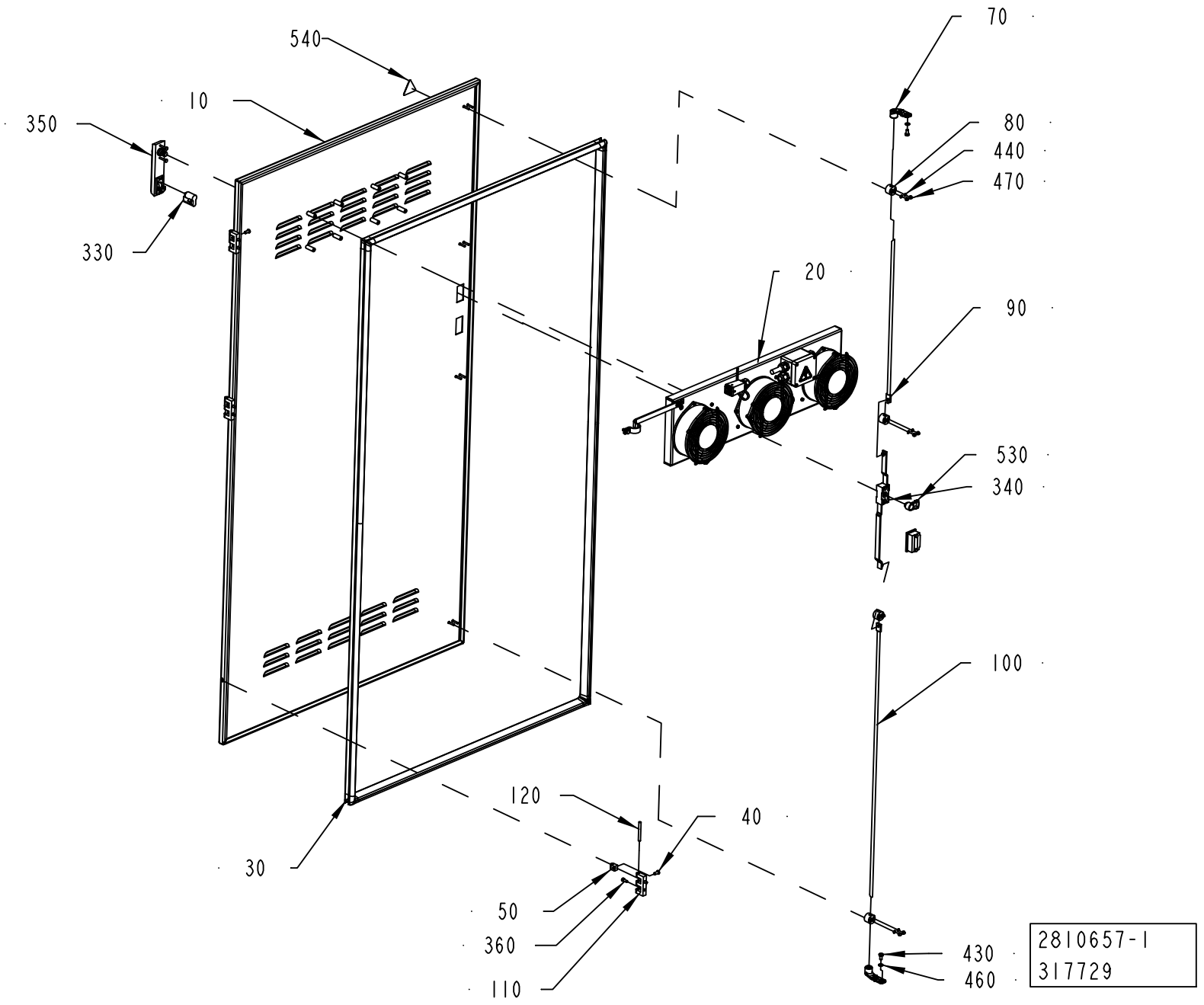
540
10
350
330
70
80
440
470
20
90
530
340
100
120
40
30
50
360
110
430
460
2810657-1
317729

ECM: 340593 - 20080403
Group number: 2810657-0100
Assembly Drawing: 2810657-1_1_AC

Pos	Part No	UN	Qty	Description	Page No
-					
010	2810664-0000		1	DOOR	
020	2921006-0100		1	FAN SYSTEM	**2-319**
030	2810669-0000		1	RUBBER SEAL	
040	1129767-0000		3	SCREW	
050	1129770-0000		3	BLOCKING PIECE	
070	1538868-0000		2	BRACKET	
080	1129274-0000		4	GUIDE LUG	
090	2508134-0000		1	LOCKING ARM	
100	2508133-0000		1	LOCKING ARM	
110	1035792-0000		3	E-HINGE	
120	988685-0000		3	PIN	
330	90237-0129		1	LOCK CYLINDER, 1109-U6	
340	90237-0153		1	LOCK HOUSING, 1121-U26-0B	
350	90237-0176		1	TURNING HANDLE, 1125-U190-A	
360	312115-0327		6	SCREW ISO4762 M5X12 A4 80	
430	312105-0366		4	SCREW M6S ISO 4017 M6X12 A480	
440	315105-0136		8	WASHER BRB 4,3X8 RFR	
460	315105-0153		4	WASHER BRB 6,4X12 RFR	
470	312705-0312		8	NUT HEX. DOMED CAP MHM-6 M4 A280	
520	90157-0041		1	SEALING COMPOUND, RHODORSEAL 5651	
530	90237-0165		1	LATCH	
540	359705-0015		1	WARNING SIGN ISO, RISK OF ELECTRIC SHOCK	

Pos	Part No	UN	Qty	Description	Page No

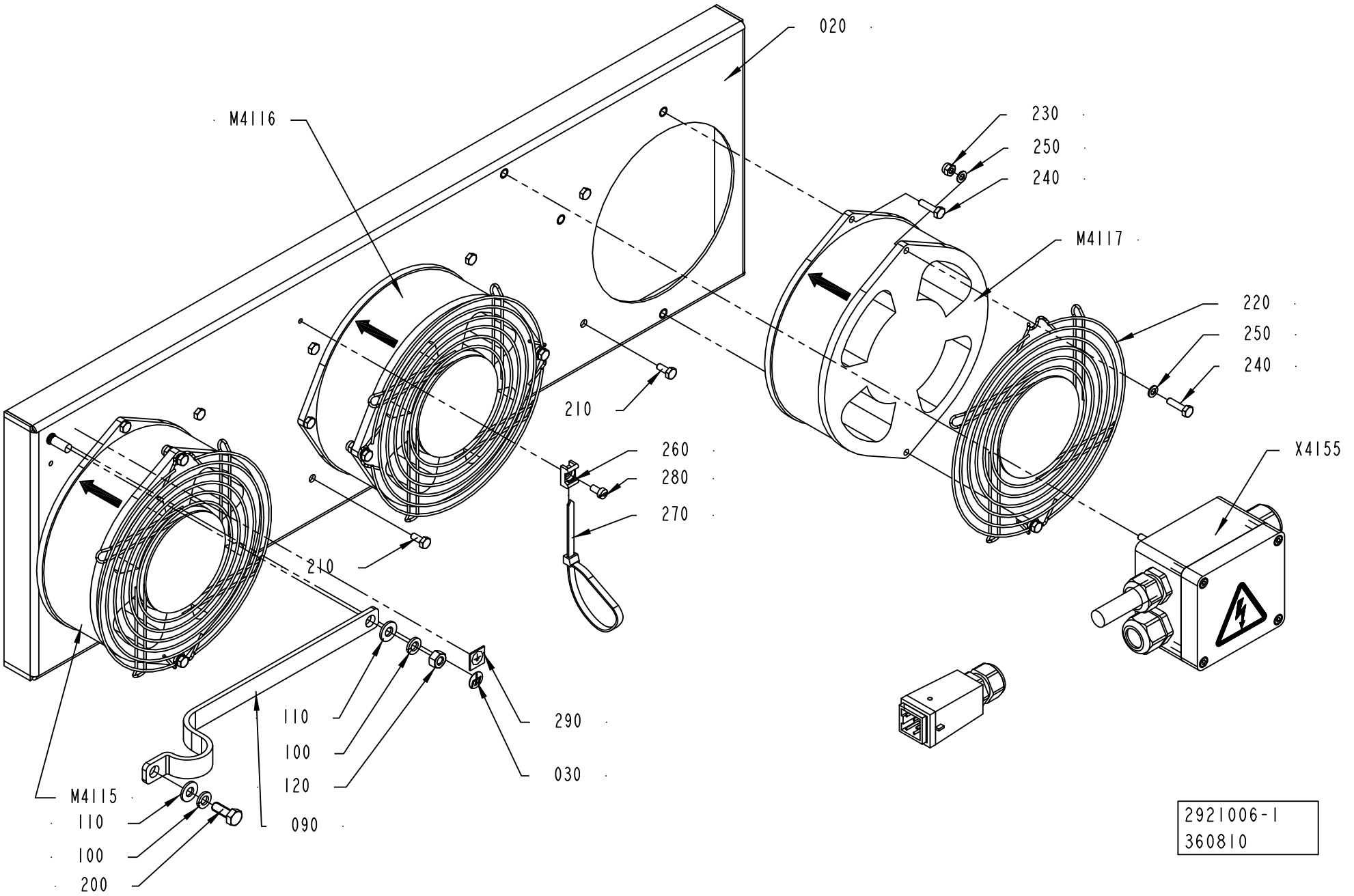
020
M4116
230
250
240
M4117
220
250
240
210
260
280
270
X4155
210
290
030
110
100
120
090
M4115
110
100
200
2921006-1
360810

ECM: 366166 - 20081002
Group number: 2921006-0100
Assembly Drawing: 2921006-1_1_AB

Pos	Part No	UN	Qty	Description	Page No
-					
020	2886763-0000		1	COVER PLATE	
030	2608177-0000		1	SIGN	
090	90135-0044		1	EARTH WIRE, L=320 MM 16 MM2	
100	315402-0156		2	LOCK WASHER FBB 6,5	
110	315105-0156		2	WASHER BRB 6,7X14 RFR	
120	312605-0316		1	HEXAGON NUT, M6M M6 A280	
200	312105-0368		1	SCREW M6S ISO 4017 M6X16 A480	
210	312105-0289		8	SCREW M6S H4X10 A4 70 ISO4017/DIN933	
220	90459-1993		3	FINGERGUARD, 101116-03	
230	312812-0312		6	HEXAGON NUT, NY-LOCK M4 A480	
240	312105-0293		12	SCREW M6S ISO 4017 M4X16 A470	
250	315105-0136		12	WASHER BRB 4,3X8 RFR	
260	352113-0205		1	ANCHOR PLATES FOR STRIPS, TYPE TM2S8-C10	
270	352113-0102		1	CABLE TIE, BLACK 188X4,8 MM	
280	312125-0287		1	SCREW ISO 1207 M4X8 A4	
290	90194-0152		1	SIGN, EARTH	
M4115	90264-0055		1	FAN / W25 130-AA 03-01	
M4116	90264-0055		1	FAN / W25 130-AA 03-01	
M4117	90264-0055		1	FAN / W25 130-AA 03-01	
X4155	2920984-0100		1	CONNECTION BOX	**2-321**

Pos	Part No	UN	Qty	Description	Page No

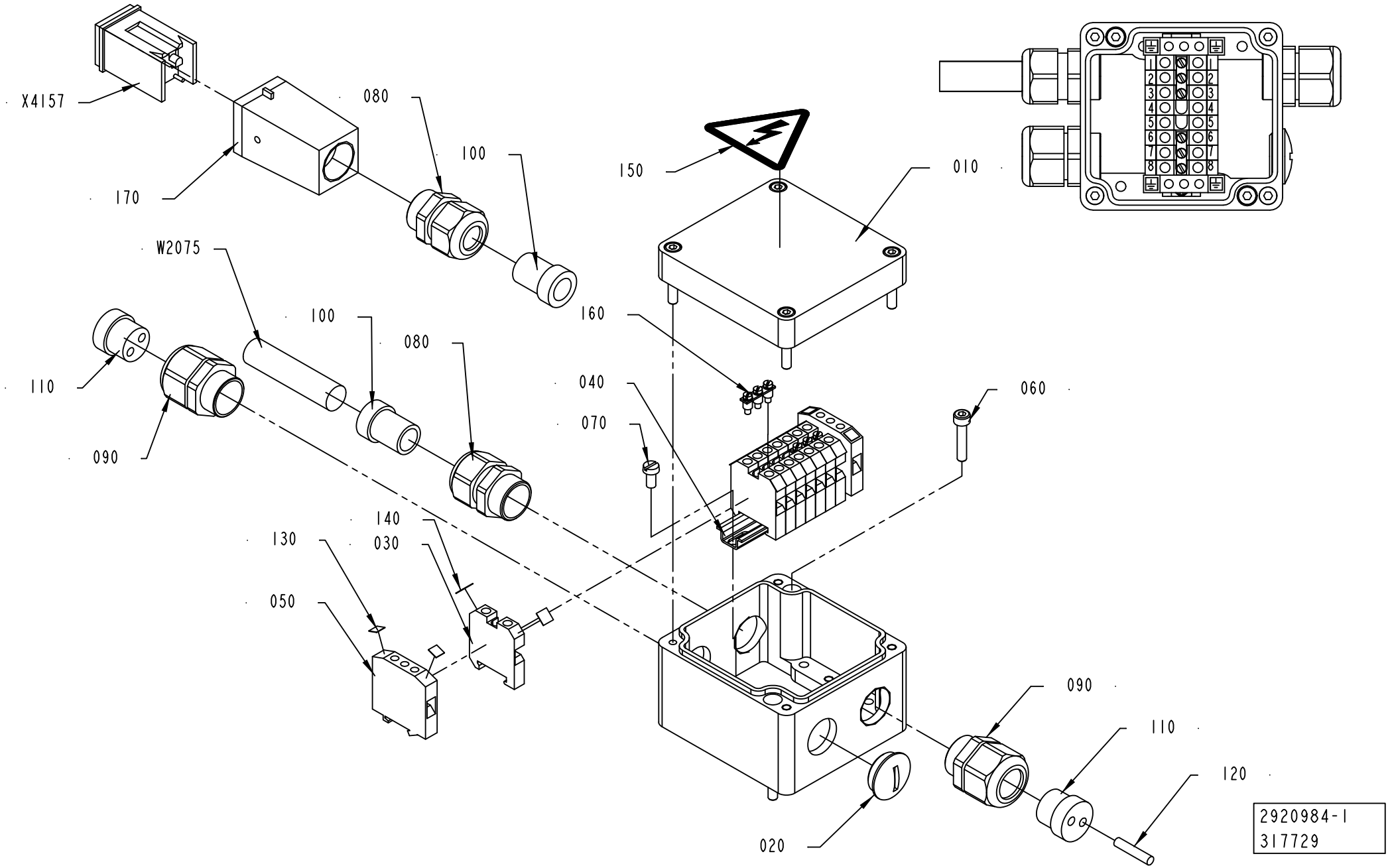
X4157
080
100
170
150
010
W2075
100
160
080
110
040
060
070
090
140
130
030
050
090
110
120
020
2920984-1
317729

ECM: 344063 - 20080403
Group number: 2920984-0100
Assembly Drawing: 2920984-1_1_AA

Pos	Part No	UN	Qty	Description	Page No
-					
010	1349568-0000		1	CONNECTION BOX	
020	90002-0009		1	BLANK-OFF PLUG, PR 18.6 SKINDICHT-BLK11	
030	90077-0079		8	FEED THROUGH TERMINAL, 02943.6	
040	90077-0328	MM	65	RAIL TS15/5	
050	90135-0026		2	EARTH TERMINAL, 3802.6	
060	312115-0295		2	SCREW ISO4762 M4X20 A4 80	
070	312125-0287		2	SCREW ISO 1207 M4X8 A4	
080	353240-0002		2	GLAND W/O INSERT PG11 NORMAL	
090	353241-0002		2	GLAND W/O INSERT PG11 EXTENDED	
100	353249-0003		2	INSERT, SINGLE HOLE, E151/11	
110	353249-0036		2	INSERT, MULTI HOLE, EK152 M 2X4	
120	353249-0301		1	SEALING PIN, 4X20	
130	359011-0819		4	MARKING PLATES 5-GW (EARTH)	
140	359011-0821		2	SET OF SIGNS 6-FW 1-50	
150	359705-0015		1	WARNING SIGN ISO, RISK OF ELECTRIC SHOCK	
160	353034-0402		2	BRIDGE CONNECTOR Q3, 13126.0	
170	90110-0371		1	COVER, HDC-HA-3-TOVL1/11165247-A/1	
W2075	351150-0412	MM	1100	CABLE OLFLEX 3X1,5 MM2 LIGHT/GREY	
X4157	90459-2412		1	CONNECTOR 4 POLE + EARTH	

Pos	Part No	UN	Qty	Description	Page No

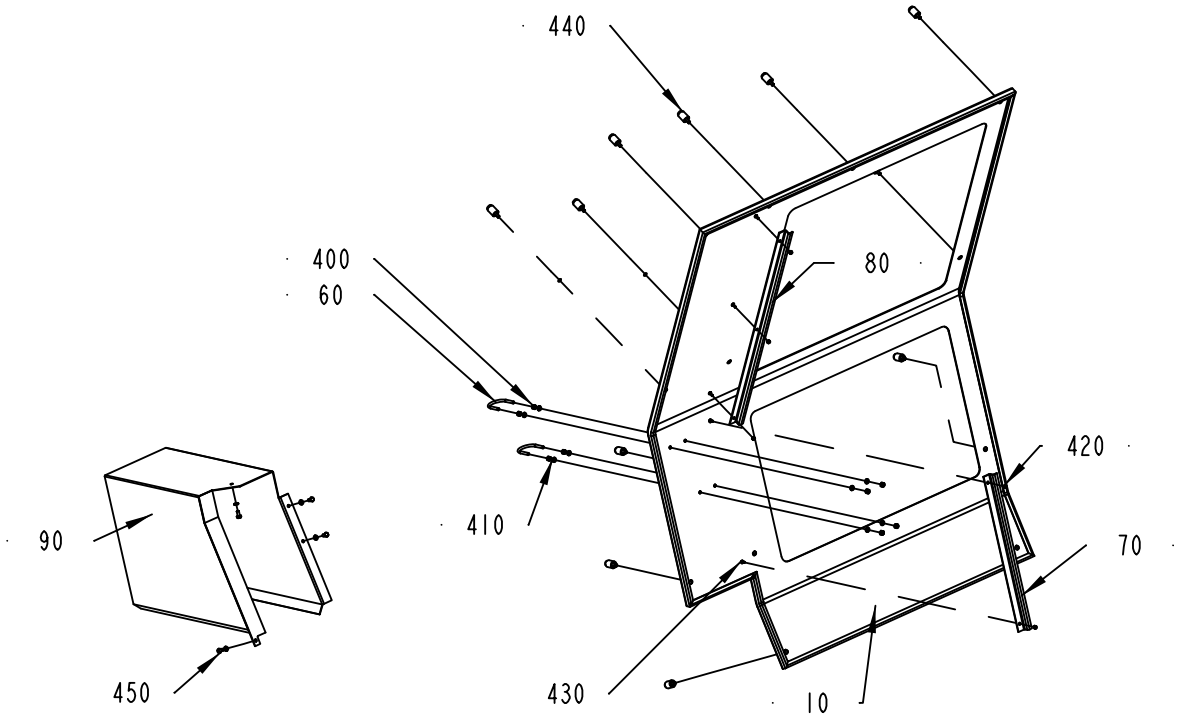

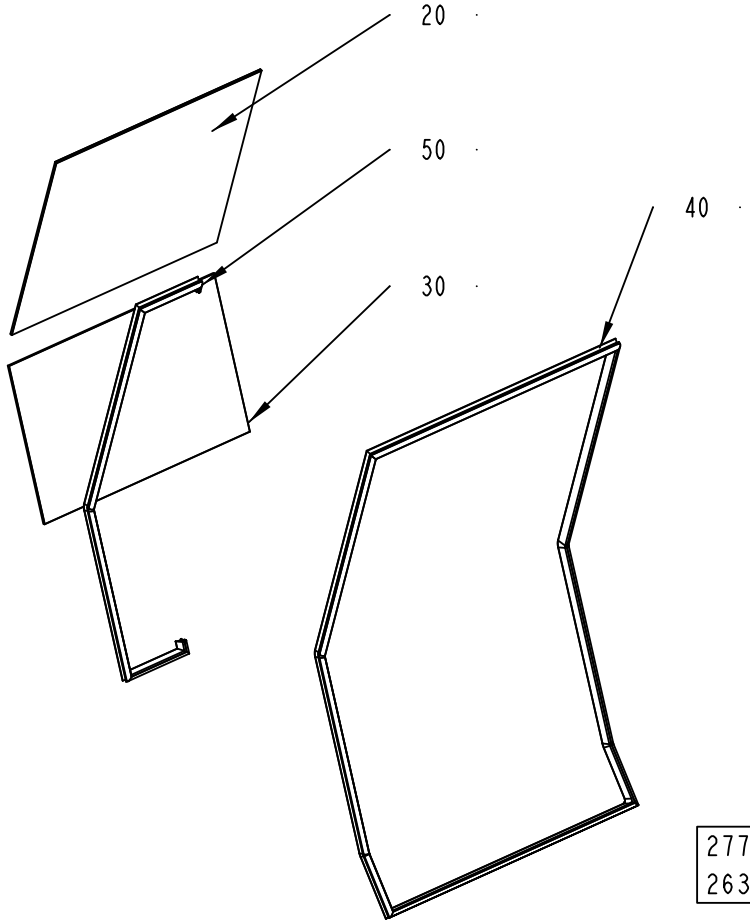

1:10

2778608-1
263726

ECM: 340590 - 20080403
Group number: 2778608-0100
Assembly Drawing: 2778608-1_1_AA

Pos	Part No	UN	Qty	Description	Page No
-					
010	2810671-0000		1	DOOR	
020	2812188-0000		1	GLASS PANE	
030	2812189-0000		1	GLASS PANE	
040	2813873-0000		1	RUBBER SEAL	
050	2813874-0000		1	RUBBER SEAL	
060	531616-0000		2	HOLDER	
070	2812195-0000		1	PROFILE	
080	2813872-0000		1	PROFILE	
090	2813879-0000		1	COVER	
310	90157-0041		1	SEALING COMPOUND, RHODORSEAL 5651	
400	312605-0316		8	HEXAGON NUT, M6M M6 A280	
410	315105-0153		12	WASHER BRB 6,4X12 RFR	
420	312812-0312		5	HEXAGON NUT, NY-LOCK M4 A480	
430	315105-0136		5	WASHER BRB 4,3X8 RFR	
440	90226-0458		12	MOUNTING SCREW	
450	312105-0367		4	SCREW M6S ISO 4017 M6X14 A480	

Pos	Part No	UN	Qty	Description	Page No

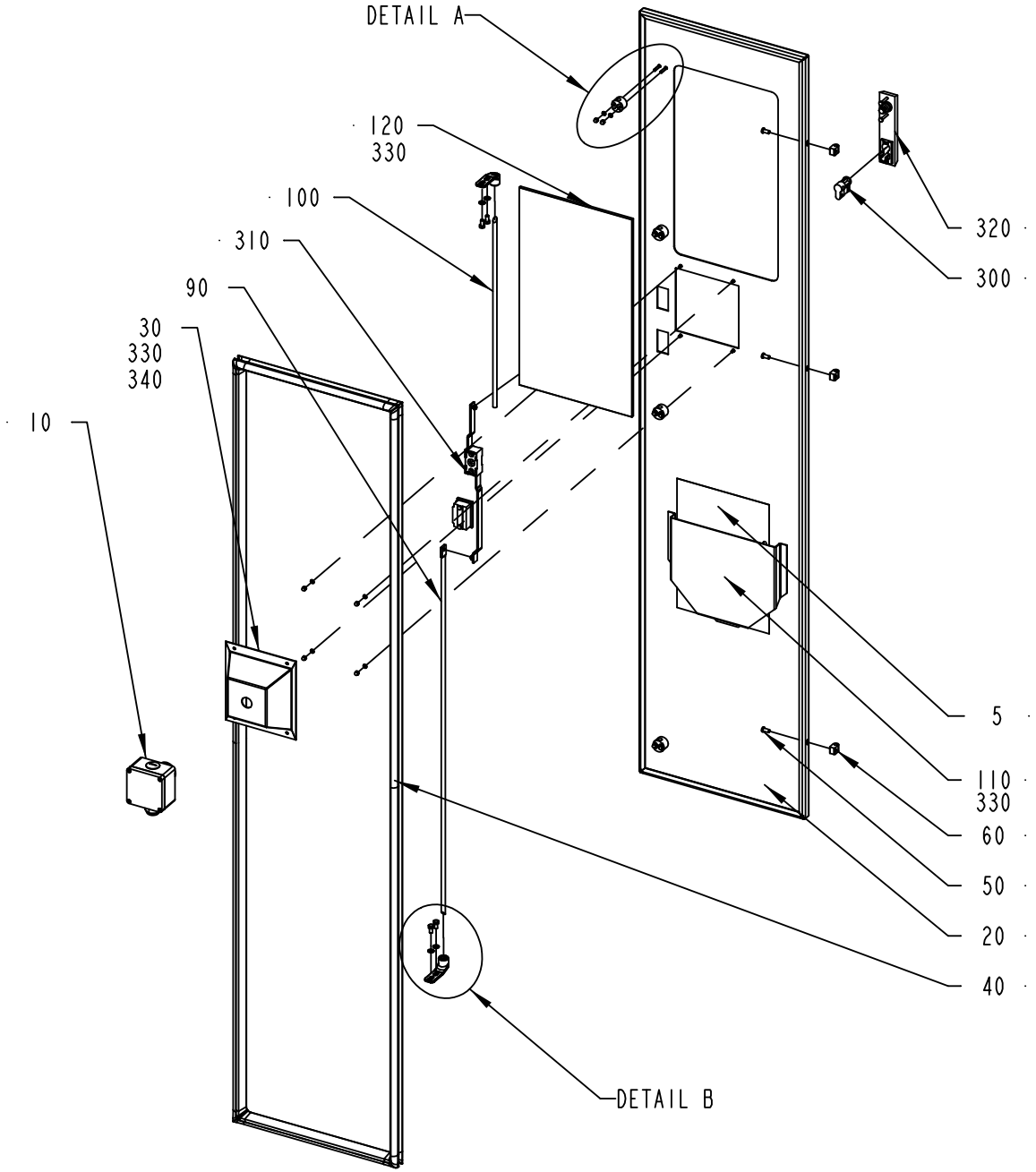

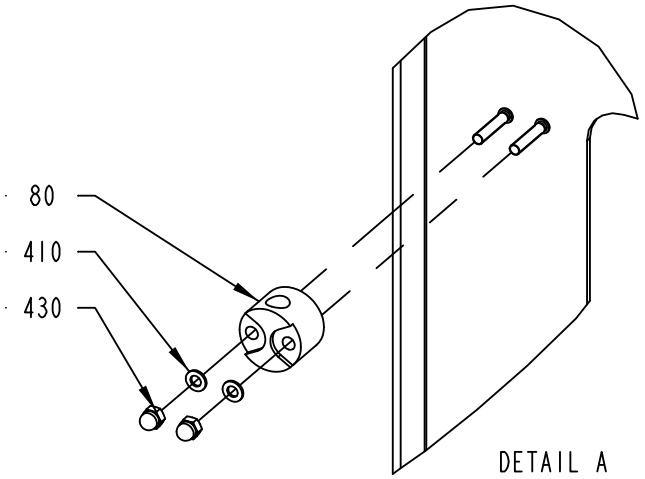

DETAIL A
1:2

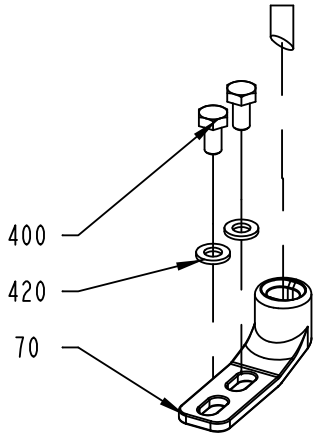

DETAIL B
1:2

2508138-1
313511

ECM: 339757 - 20080402
Group number: 2508138-0100
Assembly Drawing: 2508138-1_1_AC

Pos	Part No	UN	Qty	Description	Page No
A3/FLEX					
005	2508173-0100		1	DIAGRAM	**2-327**
020	2508139-0000		1	DOOR	
Common Parts					
010	2593851-0100		1	EMERGENCY STOP	**2-271**
030	2532619-0000		1	COVER	
040	2508186-0000		1	RUBBER SEAL	
050	1129767-0000		3	SCREW	
060	1129770-0000		3	BLOCKING PIECE	
070	1538868-0000		2	BRACKET	
080	1129274-0000		4	GUIDE LUG	
090	2508133-0000		1	LOCKING ARM	
100	2508140-0000		1	LOCKING ARM	
110	1129275-0000		1	BOX FOR DIAGRAM	
120	2532620-0000		1	GLASS PANE	
300	90237-0128		1	LOCK CYLINDER, 1109-SU125	
310	90237-0153		1	LOCK HOUSING, 1121-U26-0B	
320	90237-0176		1	TURNING HANDLE, 1125-U190-A	
330	90157-0041		1	SEALING COMPOUND, RHODORSEAL 5651	
400	312105-0366		4	SCREW M6S ISO 4017 M6X12 A480	
410	315105-0136		12	WASHER BRB 4,3X8 RFR	
420	315105-0153		4	WASHER BRB 6,4X12 RFR	
430	312705-0312		12	NUT HEX. DOMED CAP MHM-6 M4 A280	

Pos	Part No	UN	Qty	Description	Page No

This page is intentionally left blank.

ECM: 328848 - 20080102
Group number: 2508173-0100
Assembly Drawing:

Pos	Part No	UN	Qty	Description	Page No
A3/FLEX TBA 0500B, A3/FLEX TBA 1000B, A3/FLEX TBA 1000S, A3/FLEX TBA 1000SQ, A3/FLEX TPA 1000SQ, A3/FLEX TBA 0200S, A3/FLEX TBA 1500S, A3/FLEX TBA 0200B, A3/FLEX TBA 0250B, A3/FLEX TBA 0330S, A3/FLEX TPA 0330SQ, A3/FLEX TPA 0500SQ, A3/FLEX TBA 0200M, A3/FLEX TBA 0250S, A3/FLEX TBA 0500S					
010	2550944-0000		1	WATER DIAGRAM	
010	2550945-0000		1	WATER DIAGRAM	
020	2552001-0000		1	HYDRAULIC DIAGRAM	
030	2551119-0000		1	PNEUMATIC DIAGRAM	
030	2527509-0000		1	PNEUMATIC DIAGRAM	
030	2563276-0000		1	PNEUMATIC DIAGRAM	
030	2512829-0000		1	PNEUMATIC DIAGRAM	
030	2565493-0000		1	PNEUMATIC DIAGRAM	
040	2512821-0000		1	EXTERNAL CLEANING DIAGRAM	
050	2512825-0000		1	DIAGRAM	
050	2512826-0000		1	DIAGRAM	
A3/FLEX TBA 1890S, A3/FLEX TBA 2000S, A3/FLEX TBA 1400B					
010	2550945-0000		1	WATER DIAGRAM	
010	2550944-0000		1	WATER DIAGRAM	
020	2552001-0000		1	HYDRAULIC DIAGRAM	
030	2719737-0000		1	PNEUMATIC DIAGRAM	
030	2565493-0000		1	PNEUMATIC DIAGRAM	
030	2551119-0000		1	PNEUMATIC DIAGRAM	
030	2719738-0000		1	PNEUMATIC DIAGRAM	
030	2563276-0000		1	PNEUMATIC DIAGRAM	
040	2512821-0000		1	EXTERNAL CLEANING DIAGRAM	
050	2512826-0000		1	DIAGRAM	
050	2512825-0000		1	DIAGRAM	
A3/FLEX TGA 1000SQ, A3/FLEX TGA 0500SQ, A3/FLEX TGA 0750SQ					
010	2550944-0000		1	WATER DIAGRAM	
010	2550945-0000		1	WATER DIAGRAM	
020	2552001-0000		1	HYDRAULIC DIAGRAM	
030	2565493-0000		1	PNEUMATIC DIAGRAM	
030	2563276-0000		1	PNEUMATIC DIAGRAM	
030	2512829-0000		1	PNEUMATIC DIAGRAM	
030	2551119-0000		1	PNEUMATIC DIAGRAM	
030	2527509-0000		1	PNEUMATIC DIAGRAM	
040	2512821-0000		1	EXTERNAL CLEANING DIAGRAM	
050	2902477-0000		1	LUBRICATION DIAGRAM	
Common Parts					
030	2527368-0000		1	PNEUMATIC DIAGRAM	
030	2594393-0000		1	PNEUMATIC DIAGRAM	

Pos	Part No	UN	Qty	Description	Page No

Machine Type | Group Description | Used-In | Group Number | Page No

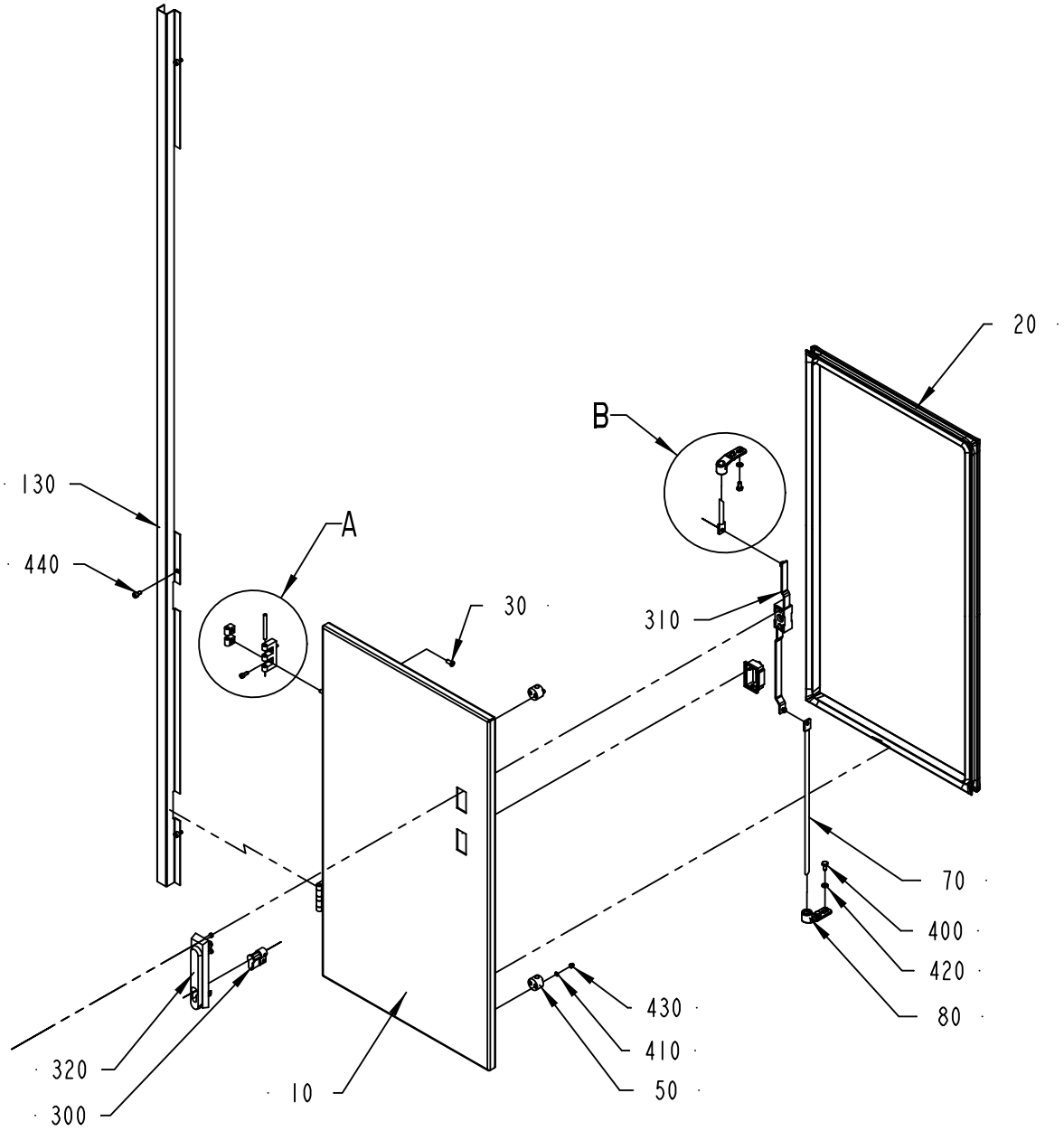

DETAIL A
SCALE 1:2

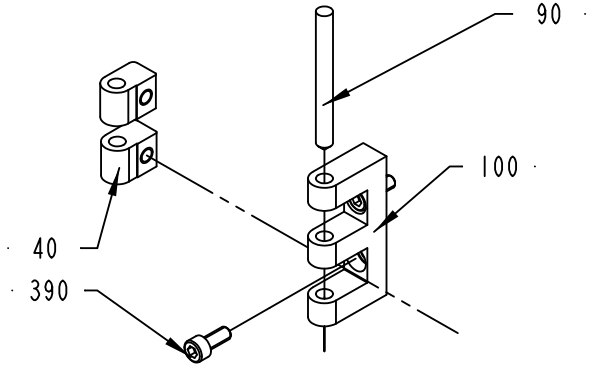

DETAIL B
SCALE 1:2

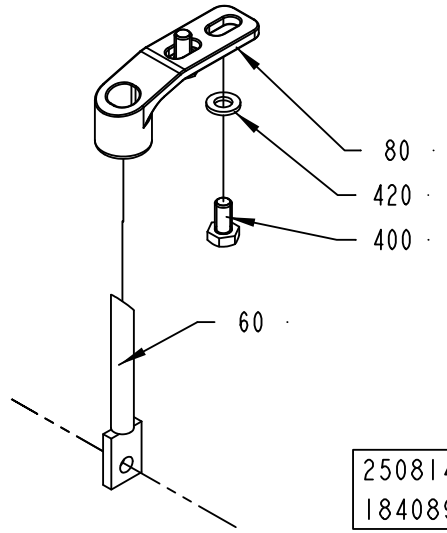

2508149-2
184089

ECM: 399867 - 20090522
Group number: 2508149-0200
Assembly Drawing: 2508149-2_1_AA

Pos	Part No	UN	Qty	Description	Page No
A3/FLEX DIMC/FLEX, A3/FLEX PT/FLEX					
130	2726296-0000		1	COVER STRIP	
A3/FLEX NODIMC NOPT					
130	2728140-0000		1	COVER STRIP	
Common Parts					
010	2508150-0000		1	DOOR	
020	2508151-0000		1	RUBBER SEAL	
030	1129767-0000		2	SCREW	
040	1129770-0000		2	BLOCKING PIECE	
050	1129274-0000		3	GUIDE LUG	
060	2508147-0000		1	LOCKING ARM	
070	2508152-0000		1	LOCKING ARM	
080	1538868-0000		2	BRACKET	
090	988685-0000		2	PIN	
100	1035792-0000		2	E-HINGE	
110	1129767-0000		2	SCREW	
120	1129770-0000		2	BLOCKING PIECE	
300	90237-0128		1	LOCK CYLINDER, 1109-SU125	
310	90237-0153		1	LOCK HOUSING, 1121-U26-0B	
320	90237-0176		1	TURNING HANDLE, 1125-U190-A	
390	312115-0327		4	SCREW ISO4762 M5X12 A4 80	
400	312105-0366		4	SCREW M6S ISO 4017 M6X12 A480	
410	315105-0136		6	WASHER BRB 4,3X8 RFR	
420	315105-0153		4	WASHER BRB 6,4X12 RFR	
430	312705-0312		6	NUT HEX. DOMED CAP MHM-6 M4 A280	
440	312115-0362		3	SCREW ISO4762 M6X8 A4 80	

Pos	Part No	UN	Qty	Description	Page No

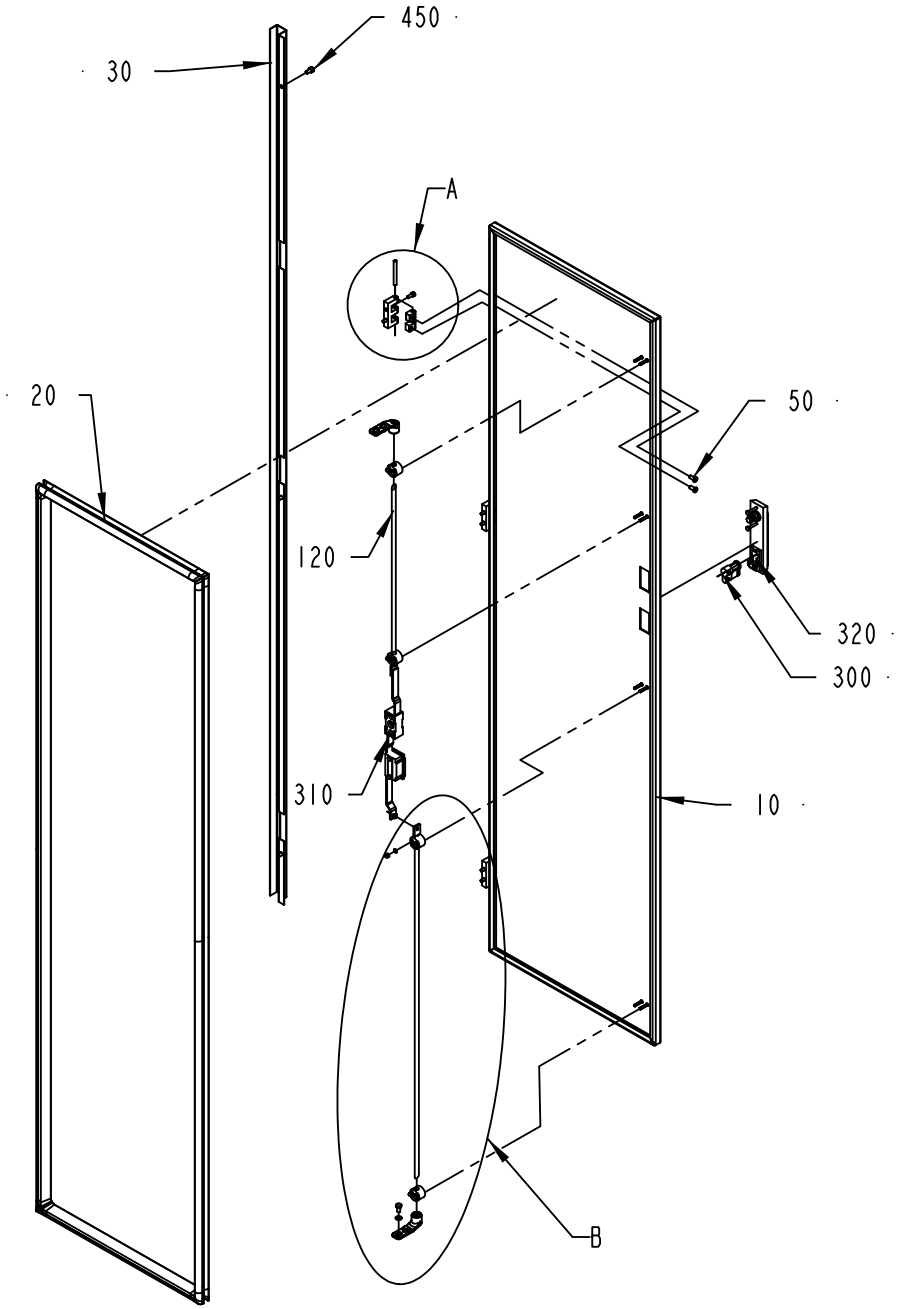

DETAIL A
SCALE 1:2

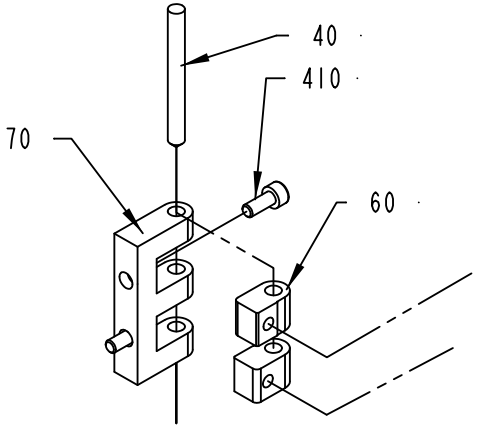

DETAIL B
SCALE 1:5

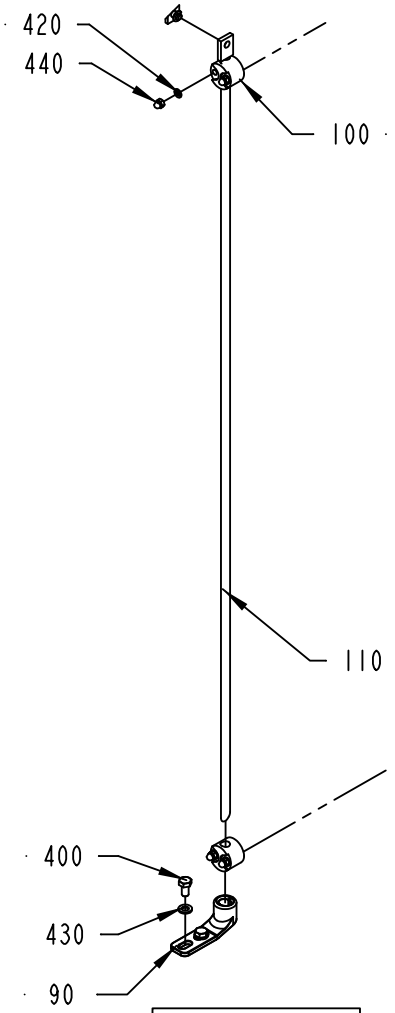

2529597-2
184089

ECM: 399868 - 20090522
Group number: 2529597-0200
Assembly Drawing: 2529597-2_1_AA

Pos	Part No	UN	Qty	Description	Page No
A3/FLEX DIMC/FLEX, A3/FLEX PT/FLEX					
030	2726295-0000		1	COVER STRIP	
A3/FLEX NODIMC NOPT					
030	2728139-0000		1	COVER STRIP	
Common Parts					
010	2529598-0000		1	DOOR	
020	2529599-0000		1	RUBBER SEAL	
040	988685-0000		3	PIN	
050	1129767-0000		6	SCREW	
060	1129770-0000		6	BLOCKING PIECE	
070	1035792-0000		3	E-HINGE	
090	1538868-0000		2	BRACKET	
100	1129274-0000		4	GUIDE LUG	
110	2508133-0000		1	LOCKING ARM	
120	2508140-0000		1	LOCKING ARM	
300	90237-0128		1	LOCK CYLINDER, 1109-SU125	
310	90237-0153		1	LOCK HOUSING, 1121-U26-0B	
320	90237-0176		1	TURNING HANDLE, 1125-U190-A	
400	312115-0327		4	SCREW ISO4762 M5X12 A4 80	
410	312105-0366		6	SCREW M6S ISO 4017 M6X12 A480	
420	315105-0136		8	WASHER BRB 4,3X8 RFR	
430	315105-0153		4	WASHER BRB 6,4X12 RFR	
440	312705-0312		8	NUT HEX. DOMED CAP MHM-6 M4 A280	
450	312115-0362		3	SCREW ISO4762 M6X8 A4 80	

Pos	Part No	UN	Qty	Description	Page No

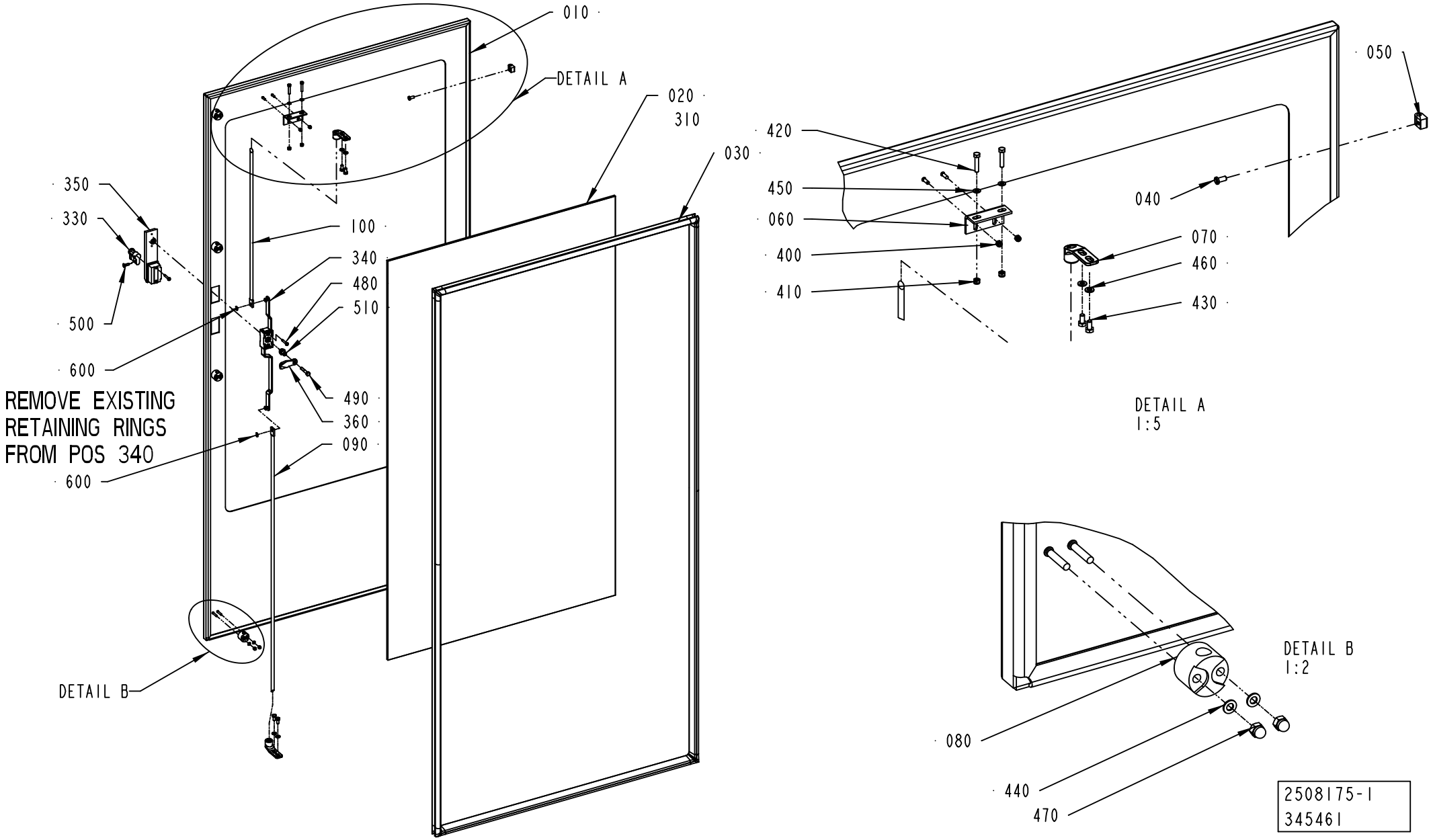
010
DETAIL A
020
310
030
350
330
100
340
480
510
500
600
490
360
090
600
REMOVE EXISTING
RETAINING RINGS
FROM POS 340
DETAIL B
420
450
060
400
410
050
040
070
460
430
DETAIL A
1:5
DETAIL B
1:2
080
440
470
2508175-1
345461

ECM: 392006 - 20090701
Group number: 2508175-0100
Assembly Drawing: 2508175-1_1_AD

Pos	Part No	UN	Qty	Description	Page No
A3/FLEX					
010	2508176-0000		1	DOOR	
020	2527640-0000		1	GLASS PANE	
030	2527639-0000		1	RUBBER SEAL	
Common Parts					
040	1129767-0000		3	SCREW	
050	1129770-0000		3	BLOCKING PIECE	
060	1346885-0000		1	SUPPORT	
070	1538868-0000		2	BRACKET	
080	1129274-0000		4	GUIDE LUG	
090	2508133-0000		1	LOCKING ARM	
100	2508134-0000		1	LOCKING ARM	
310	90157-0041		1	SEALING COMPOUND, RHODORSEAL 5651	
330	90237-0128		1	LOCK CYLINDER, 1109-SU125	
340	90600-8386		1	LOCK HOUSING, 1121-SU887-B	
350	90600-5084		1	LEVER MECHANISM, 1125-SU404	
360	90600-4542		1	LOCK CAM, 1000-227-01	
400	312812-0312		2	HEXAGON NUT, NY-LOCK M4 A480	
410	312812-0314		2	HEXAGON NUT, NY-LOCK M5 A480	
420	312105-0333		2	SCREW M6S ISO 4017 M5X25 A480	
430	312105-0366		4	SCREW M6S ISO 4017 M6X12 A480	
440	315105-0136		8	WASHER BRB 4,3X8 RFR	
450	315105-0146		2	WASHER BRB 5,3X10 RFR	
460	315105-0153		4	WASHER BRB 6,4X12 RFR	
470	312705-0312		8	NUT HEX. DOMED CAP MHM-6 M4 A280	
480	312504-0348		4	TAPPING SCREW ISO 7049-A2-ST4,2X25-C-Z	
490	312105-0376		1	SCREW M6S ISO 4014 M6X35 A480	
500	312155-0329		1	SCREW DIN 7991 MF6S M5X16 A4 70	
510	90600-8406		1	SPACER, 1000-S1455-SK	
600	315755-0107		2	RETAINING RING SHAFT DIN 6799 5 A2	

Pos	Part No	UN	Qty	Description	Page No

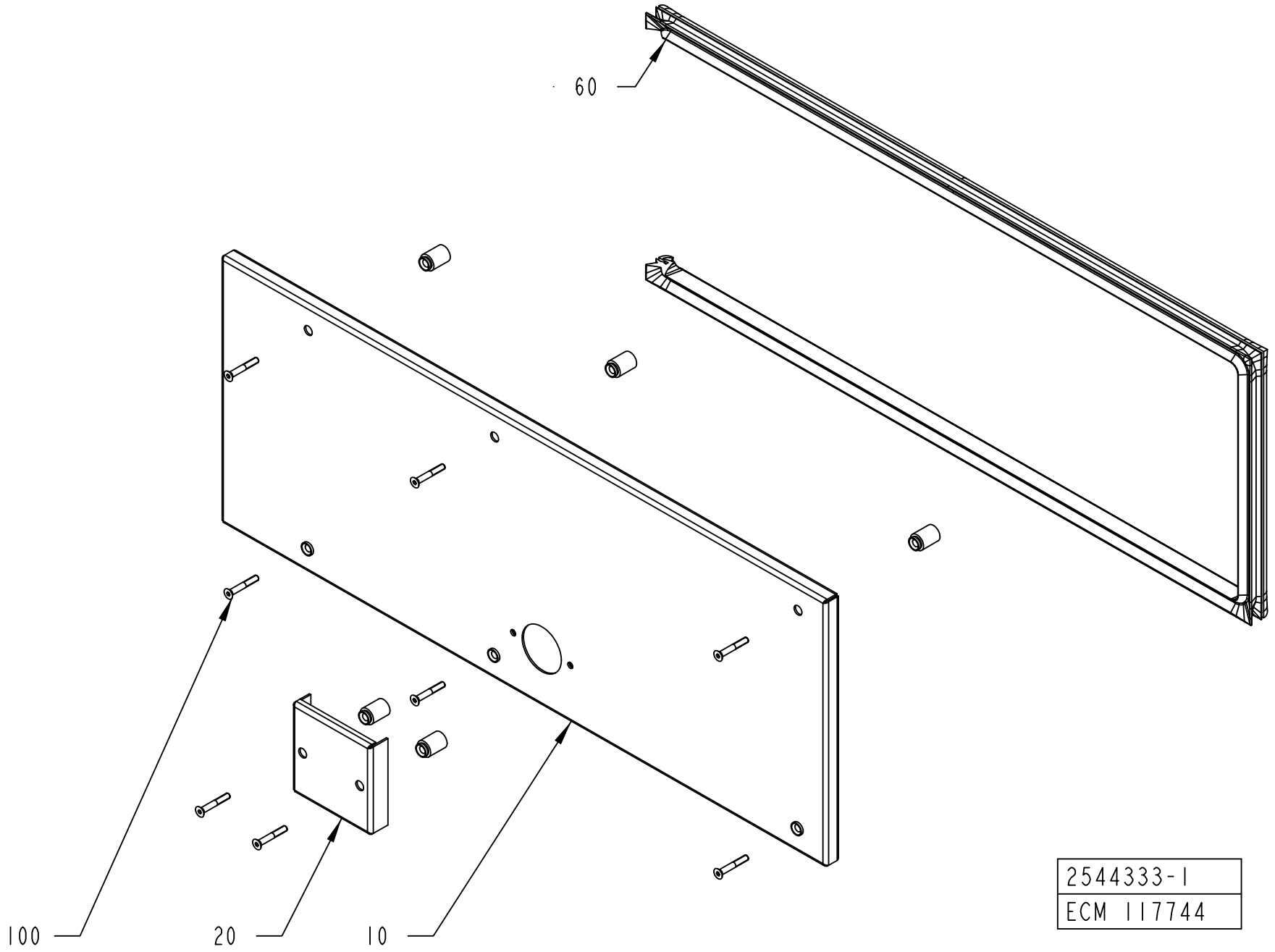
60
100
20
10
2544333-1
ECM 117744

ECM: 117744 - 20030403
Group number: 2544333-0100
Assembly Drawing: 2544333-1_1_AA

Pos	Part No	UN	Qty	Description	Page No
-					
010	2544331-0000		1	COVER	
020	2544332-0000		1	PROTECTION	
060	2508161-0000		1	RUBBER SEAL	
100	90226-0458		8	MOUNTING SCREW	

Pos	Part No	UN	Qty	Description	Page No

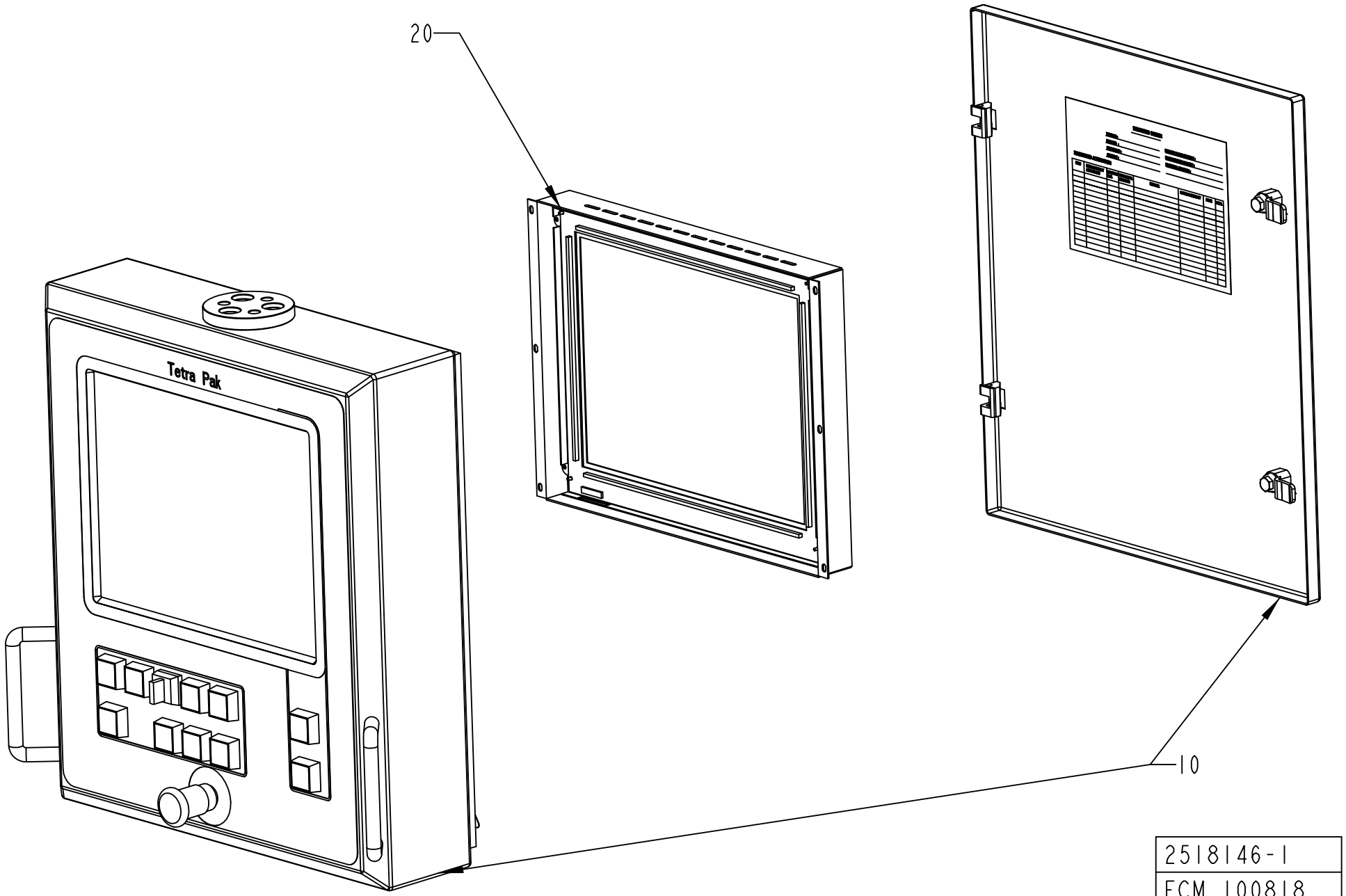
20
Tetra Pak
10
2518146-1
ECM 100818

ECM: 272531 - 20080403
Group number: 2518146-0100
Assembly Drawing: 2518146-1_1_AA

Pos	Part No	UN	Qty	Description	Page No
A3/FLEX					
0010	2518147-0101		1	PANEL UNIT 15"	**2-339**
Common Parts					
0020	90459-0287		1	DISPLAY UNIT 15", 02567-000	

Pos	Part No	UN	Qty	Description	Page No

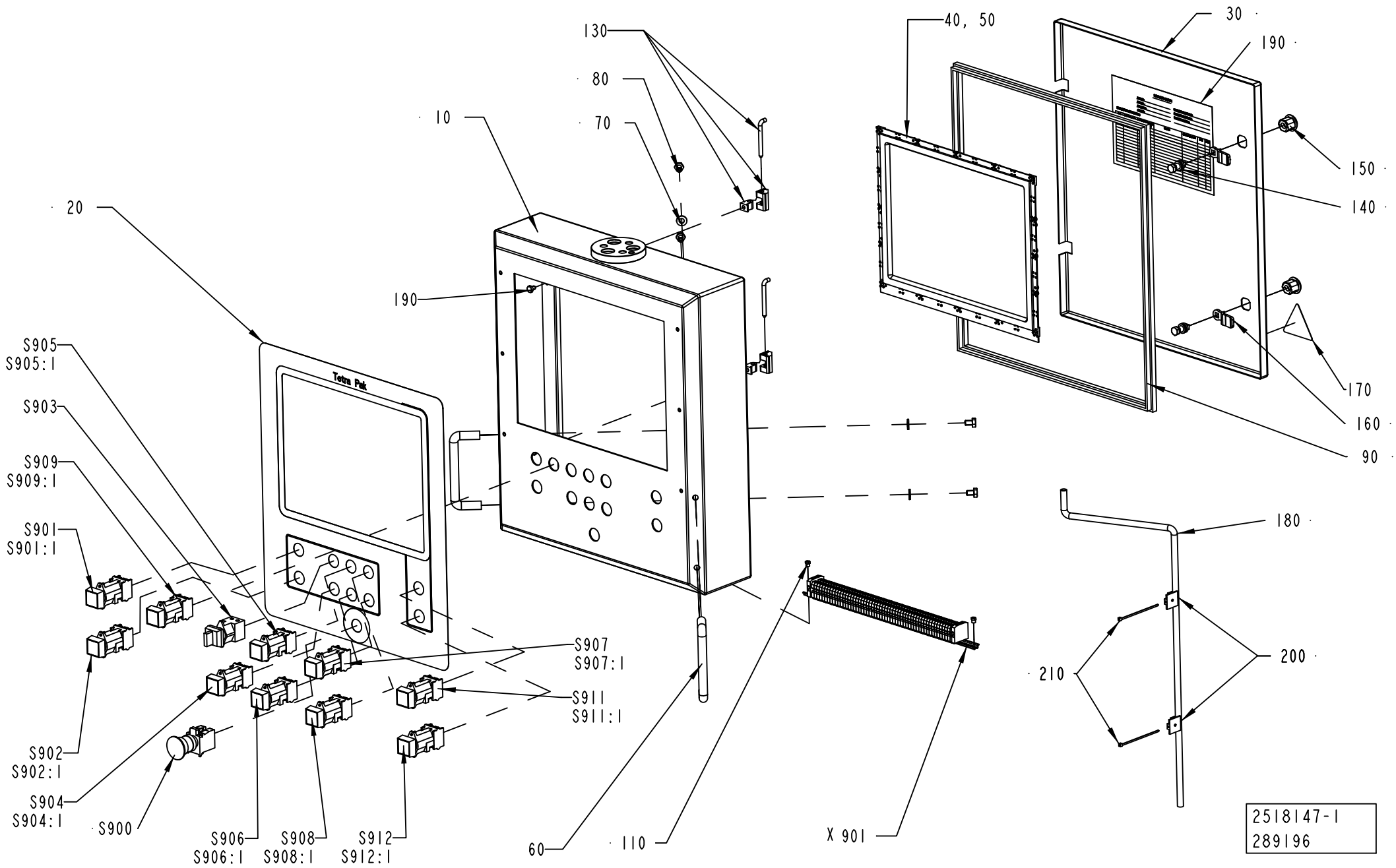
130
80
70
10
20
190
S905
S905:1
S903
S909
S909:1
S901
S901:1
S907
S907:1
S911
S911:1
S902
S902:1
S904
S904:1
S900
S906
S906:1
S908
S908:1
S912
S912:1
60
110
X 901
40, 50
30
190
150
140
170
160
90
180
210
200
2518147-1
289196

ECM: 289196 -
Group number: 2518147-0101
Assembly Drawing: 2518147-1_1_AB

Pos	Part No	UN	Qty	Description	Page No
A3/FLEX					
S903	90111-0120		1	SWITCH, 2 POS.704.510 .0A+704.901.5/A	
S904	90064-0082		1	PUSH BUTTON, WHITE	
	90036-0057		*1*	*LIGHT BULB, BA9S 28V*	
S904:1	359301-0170		1	BUTTON SIGN, SPOOLING OF FINAL FOLDER	
S905	90064-0098		1	PUSH BUTTON, CLEAR	
S905:1	359301-0091		1	BUTTON SIGN, INCHING FINAL FOLDER	
Common Parts					
010	2518148-0000		1	PANEL	
020	2518149-0000		1	FOIL	
030	2518157-0000		1	DOOR	
040	90459-0288		1	SLIM LINE TOUCH BEZEL 15", 1511	
050	90153-0060		1	ADHESIVE, 3M DP-190 B/A	
060	90017-0016		2	HANDLE, NO. 14.4012.02.120	
070	90005-0077		4	WASHER PL.RND.NYL.8,4/7, H=2	
080	312105-0447		4	SCREW M6S ISO 4017 M8X12 A480	
090	90143-0057	MM	1800	STRIP EMKA 1011-05 21X11MM	
110	1041609-0000		2	NUT	
120	312605-0316		1	HEXAGON NUT, M6M M6 A280	
130	90248-0047		2	HINGE, 1150-U50	
140	90237-0320		2	LOCK HOUSING, 1000-U136	
150	90237-0319		2	LOCK HOUSING, 1000-U134	
160	90237-0157		2	LOCK BOLT, 1000-230	
170	359705-0015		1	WARNING SIGN ISO, RISK OF ELECTRIC SHOCK	
180	90166-0008	MM	650	HOSE 7/10 PVC TRANSP.	
190	90194-0133		1	SIGN "DELIVERED DESIGN"	
200	352113-0206		2	ANCHOR PLATES FOR STRIPS, TYPE ABM100-AT	
210	352113-0101		2	CABLE TIE, BLACK 92X2,5 MM	
220	312105-0362		2	SCREW M6S ISO 4017 M6X8 A480	
S900	90458-1651		1	EMERGENCY STOP, ZB4-BS-844 ZB4-BZ-104	
S901	90064-0082		1	PUSH BUTTON, WHITE	
	90036-0057		*1*	*LIGHT BULB, BA9S 28V*	
S901:1	359301-0519		1	SIGN "TPOP RESET"	
S902	90064-0082		1	PUSH BUTTON, WHITE	
	90036-0057		*1*	*LIGHT BULB, BA9S 28V*	
S902:1	359301-0130		1	BUTTON SIGN, LAMP TEST	
S906	90064-0082		1	PUSH BUTTON, WHITE	
	90036-0057		*1*	*LIGHT BULB, BA9S 28V*	
S906:1	359301-0050		1	BUTTON SIGN, DROP CHUTE BRIK	
S907	90064-0098		1	PUSH BUTTON, CLEAR	
S907:1	359301-0090		1	BUTTON SIGN, INCHING	
S908	90064-0084		1	PUSH BUTTON, YELLOW	
S908:1	359301-0110		1	BUTTON SIGN, SHORT STOP	
S909	90064-0086		1	PUSH BUTTON, WHITE	
	90036-0057		*1*	*LIGHT BULB, BA9S 28V*	
S909:1	359301-0160		1	BUTTON SIGN, DRAINAGE OF PRODUCT TUBE	
S911	90064-0093		1	PUSH BUTTON, GREEN	
	90036-0057		*1*	*LIGHT BULB, BA9S 28V*	
S911:1	359301-0001		1	BUTTON SIGN, UP	
S912	90064-0082		1	PUSH BUTTON, WHITE	
	90036-0057		*1*	*LIGHT BULB, BA9S 28V*	
S912:1	359301-0005		1	BUTTON SIGN, DOWN	
X901	1095597-0100		1	TERMINAL	**2-341**

Machine Type | Group Description | Used-In | Group Number | Page No

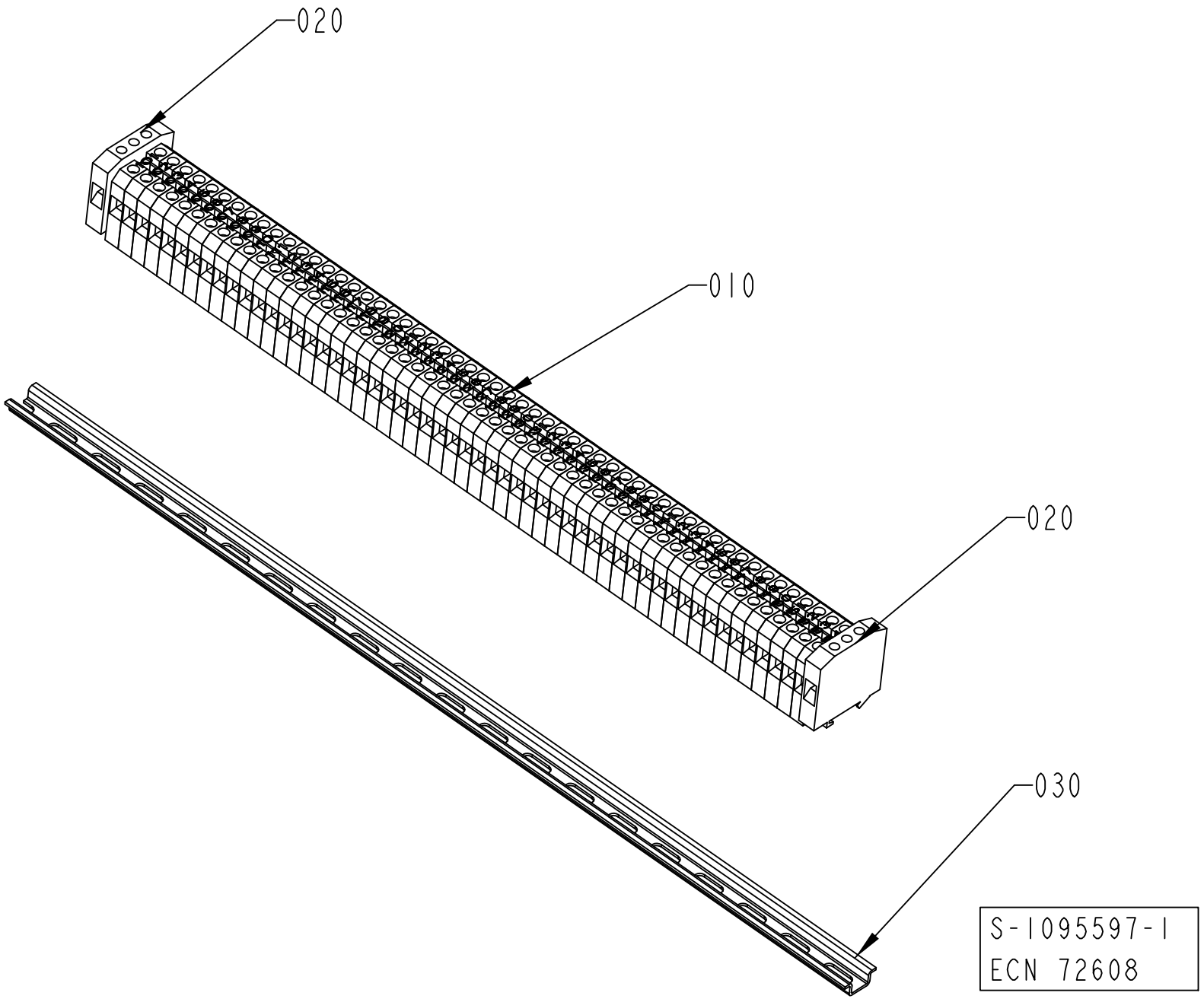
020
010
020
030
S-1095597-1
ECN 72608

ECM: 189931 - 20041104
Group number: 1095597-0100
Assembly Drawing: 1095597-1_1_AB

Pos	Part No	UN	Qty	Description	Page No
-					
010	90077-0079		56	FEED THROUGH TERMINAL, 02943.6	
020	90135-0026		2	EARTH TERMINAL, 3802.6	
030	90077-0328	MM	390	RAIL TS15/5	
040	359011-0821		2	SET OF SIGNS 6-FW 1-50	
050	359011-0819		1	MARKING PLATES 5-GW (EARTH)	

Pos	Part No	UN	Qty	Description	Page No

CABLE DUCT

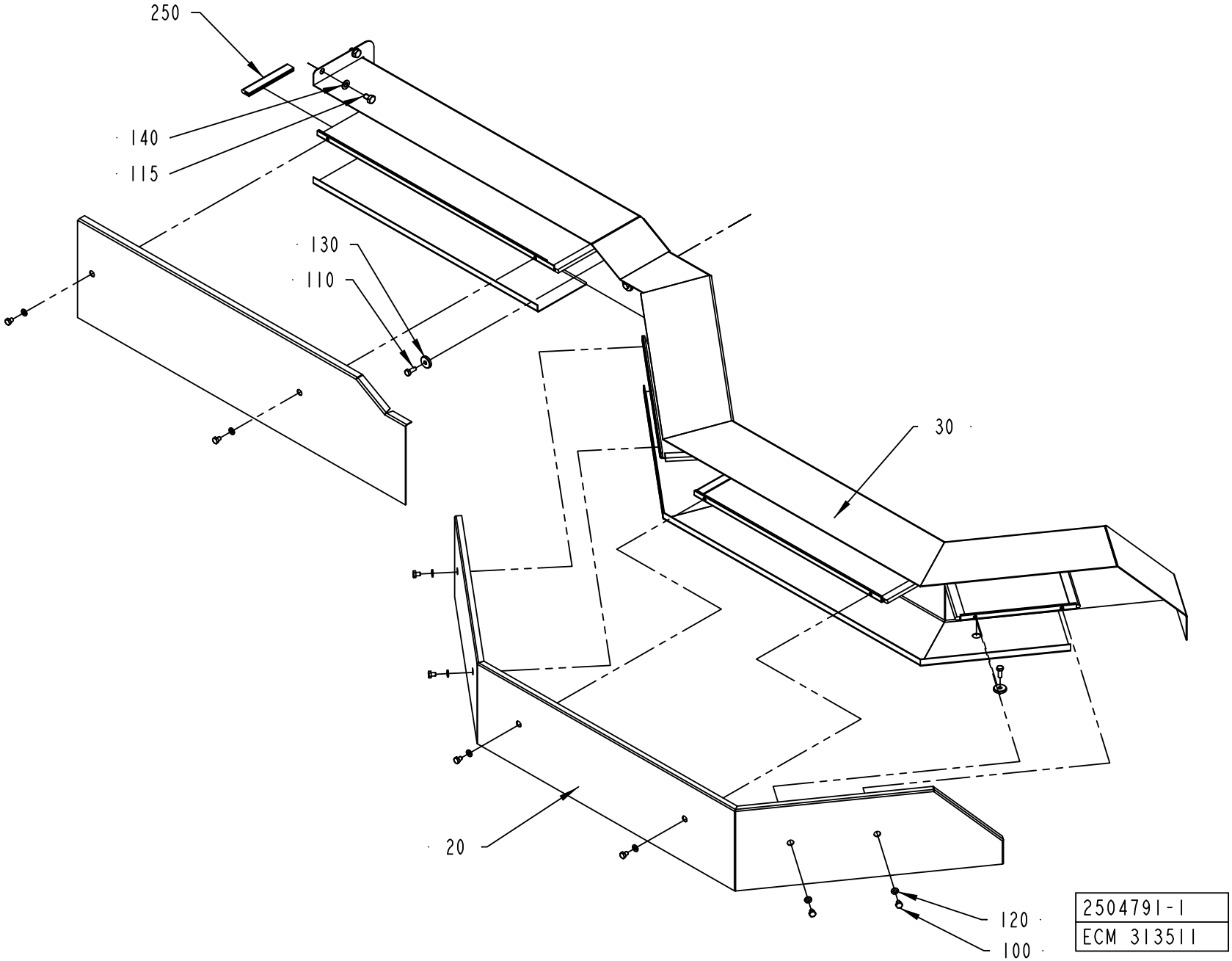

ECM: 339751 - 20080402
Group number: 2504791-0100
Assembly Drawing: 2504791-1_1_AB

This list covers pages from 2-342 to 2-345

Pos	Part No	UN	Qty	Description	Page No
A3/FLEX TBA, A3/FLEX TPA (See drawing on page: 2-342)					
010	2520181-0000		1	LID	
020	1512145-0000		1	LID	
030	2520180-0000		1	CABLE DUCT	
100	312105-0362		8	SCREW M6S ISO 4017 M6X8 A480	
115	312105-0447		4	SCREW M6S ISO 4017 M8X12 A480	
120	315105-0153		8	WASHER BRB 6,4X12 RFR	
140	315105-0165		4	WASHER BRB 8,4X16 RFR	
A3/FLEX TGA (See drawing on page: 2-344)					
010	2843152-0000		1	COVER	
020	2843153-0000		1	CABLE DUCT	
030	2843151-0000		1	COVER	
040	2843154-0000		1	CABLE DUCT	
050	2843155-0000		1	COVER	
100	312105-0362		11	SCREW M6S ISO 4017 M6X8 A480	
115	312105-0447		7	SCREW M6S ISO 4017 M8X12 A480	
120	315105-0153		11	WASHER BRB 6,4X12 RFR	
140	315105-0165		7	WASHER BRB 8,4X16 RFR	
Common Parts					
110	312105-0368		3	SCREW M6S ISO 4017 M6X16 A480	
130	315125-0153		3	WASHER TBRSB 6,4X22X4 A4	
250	90143-0097	MM	1200	SELF GRIPPING GASKET, 1011-24	

Pos	Part No	UN	Qty	Description	Page No

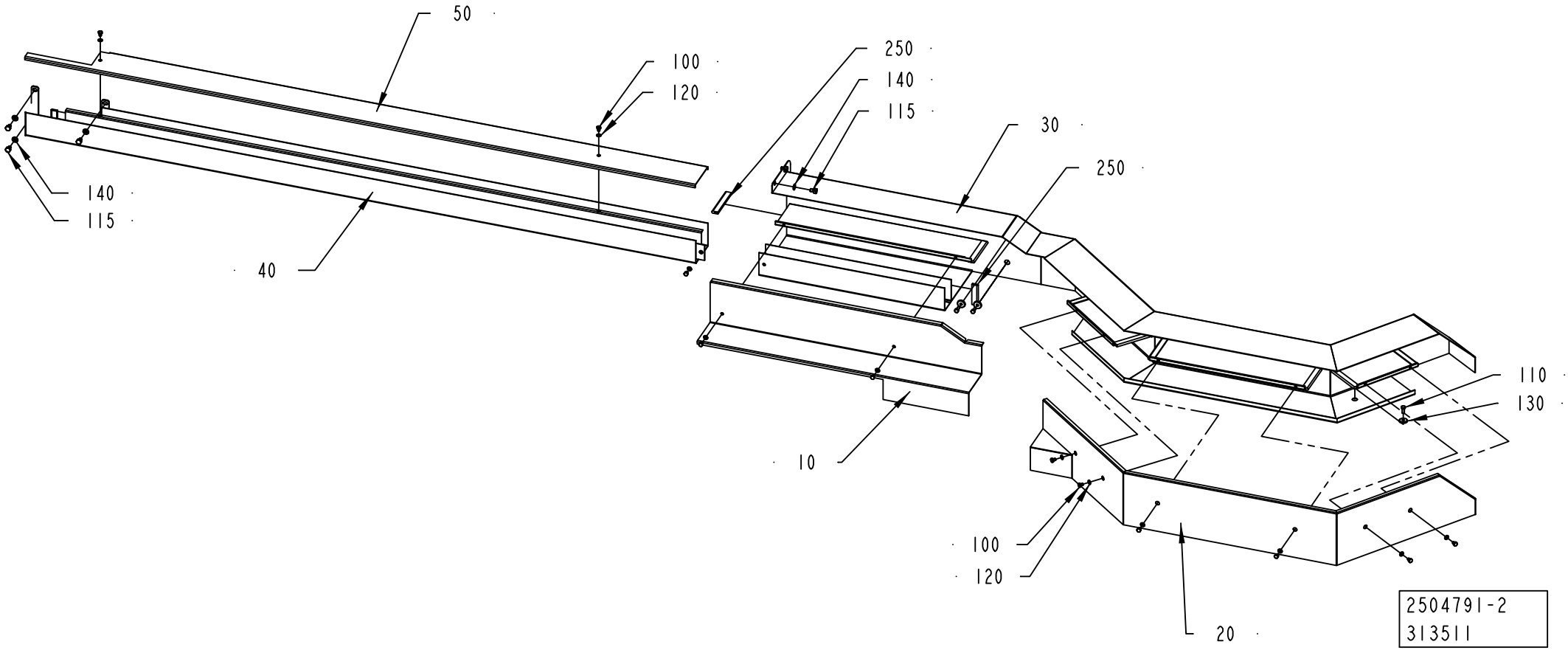
50
100
120
250
140
115
30
250
140
115
40
10
110
130
100
120
20
2504791-2
313511

ECM: 339751 - 20080402
Group number: 2504791-0100
Assembly Drawing: 2504791-2_1_AC

This list covers pages from 2-342 to 2-345

Pos	Part No	UN	Qty	Description	Page No
A3/FLEX TBA, A3/FLEX TPA (See drawing on page: 2-342)					
010	2520181-0000		1	LID	
020	1512145-0000		1	LID	
030	2520180-0000		1	CABLE DUCT	
100	312105-0362		8	SCREW M6S ISO 4017 M6X8 A480	
115	312105-0447		4	SCREW M6S ISO 4017 M8X12 A480	
120	315105-0153		8	WASHER BRB 6,4X12 RFR	
140	315105-0165		4	WASHER BRB 8,4X16 RFR	
A3/FLEX TGA (See drawing on page: 2-344)					
010	2843152-0000		1	COVER	
020	2843153-0000		1	CABLE DUCT	
030	2843151-0000		1	COVER	
040	2843154-0000		1	CABLE DUCT	
050	2843155-0000		1	COVER	
100	312105-0362		11	SCREW M6S ISO 4017 M6X8 A480	
115	312105-0447		7	SCREW M6S ISO 4017 M8X12 A480	
120	315105-0153		11	WASHER BRB 6,4X12 RFR	
140	315105-0165		7	WASHER BRB 8,4X16 RFR	
Common Parts					
110	312105-0368		3	SCREW M6S ISO 4017 M6X16 A480	
130	315125-0153		3	WASHER TBRSB 6,4X22X4 A4	
250	90143-0097	MM	1200	SELF GRIPPING GASKET, 1011-24	

Pos	Part No	UN	Qty	Description	Page No

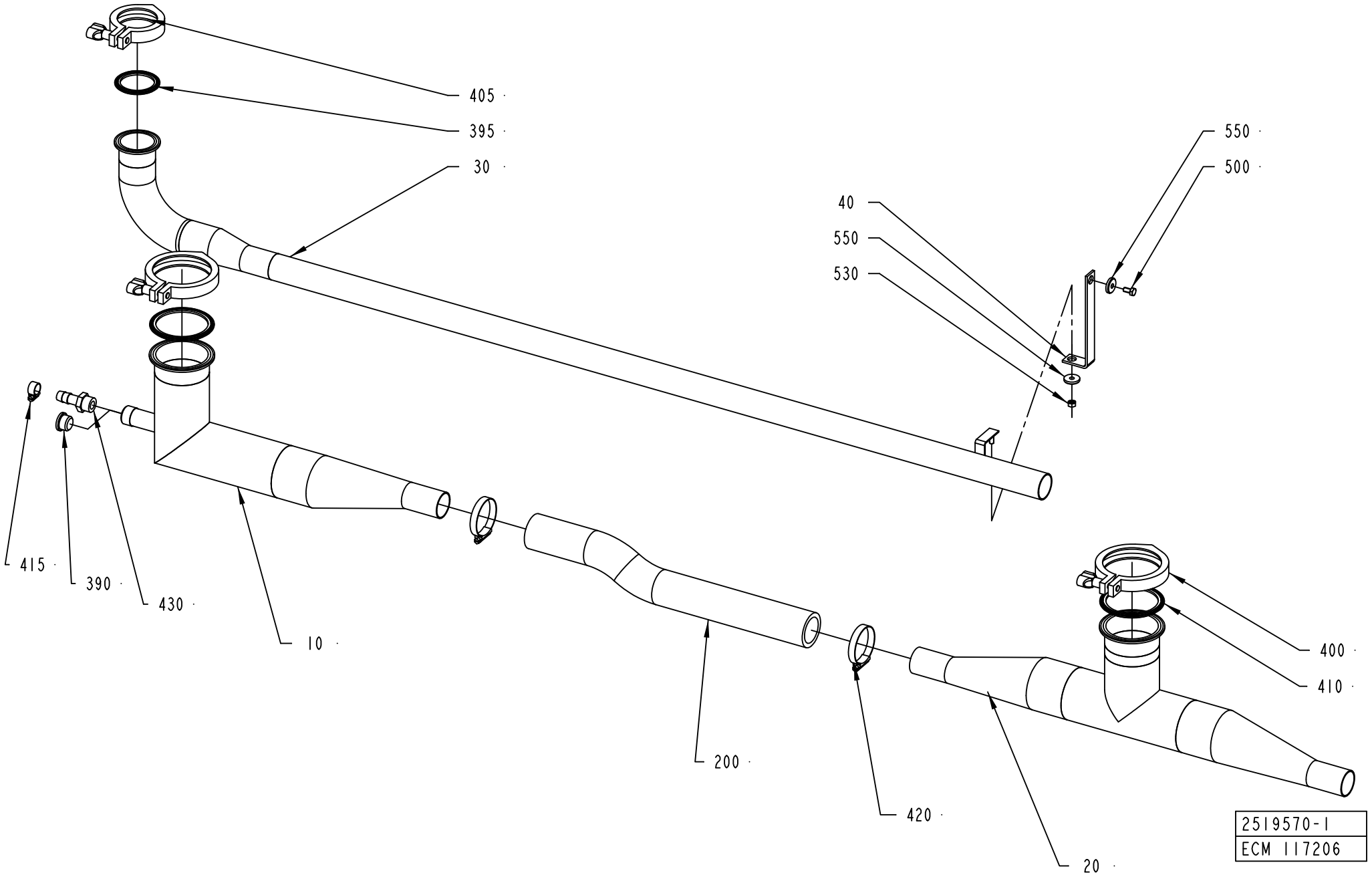
405
395
30
40
550
530
550
500
415
390
430
10
200
420
20
400
410
2519570-1
ECM 117206

ECM: 393186 - 20090420
Group number: 2519570-0100
Assembly Drawing: 2519570-1_1_AA

Pos	Part No	UN	Qty	Description	Page No
A3/FLEX TGA (See drawing on page: 2-346)					
030	2836291-0000		1	PIPE	
200	90166-0236	MM	1300	HOSE, 38/51 REINFORCED RUBBER	
A3/FLEX TBA, A3/FLEX TPA (See drawing on page: 2-346)					
030	2594567-0000		1	PIPE	
200	90166-0236	MM	500	HOSE, 38/51 REINFORCED RUBBER	
Common Parts					
010	2519571-0000		1	PIPE	
020	2519572-0000		1	PIPE	
040	2594589-0000		1	BRACKET	
390	342713-0213		1	PLUG, EXT THREAD HEX SOCKET 8638-00-120	
395	342850-0305		1	GASKET 47,8X62,6X5,2 MM 2" FDA	
400	342840-0107		2	CLAMP 3"	
405	342840-0105		1	CLAMPING PIECE	
410	342850-0107		2	GASKET, FDA, 3-A, 3	
415	342991-0101		1	HOSE CLIP,WORM DRIVE TYPE (13)-16	
420	342991-0109		2	HOSE CLIP,WORM DRIVE TYPE (48)-50	
430	90055-0033		1	HOSE NIPPLE, EXT.THR. R1/2-13 MM	
500	312105-0366		1	SCREW M6S ISO 4017 M6X12 A480	
530	312605-0316		1	HEXAGON NUT, M6M M6 A280	
550	315125-0153		2	WASHER TBRSB 6,4X22X4 A4	

Pos	Part No	UN	Qty	Description	Page No

WASTE CONVEYOR

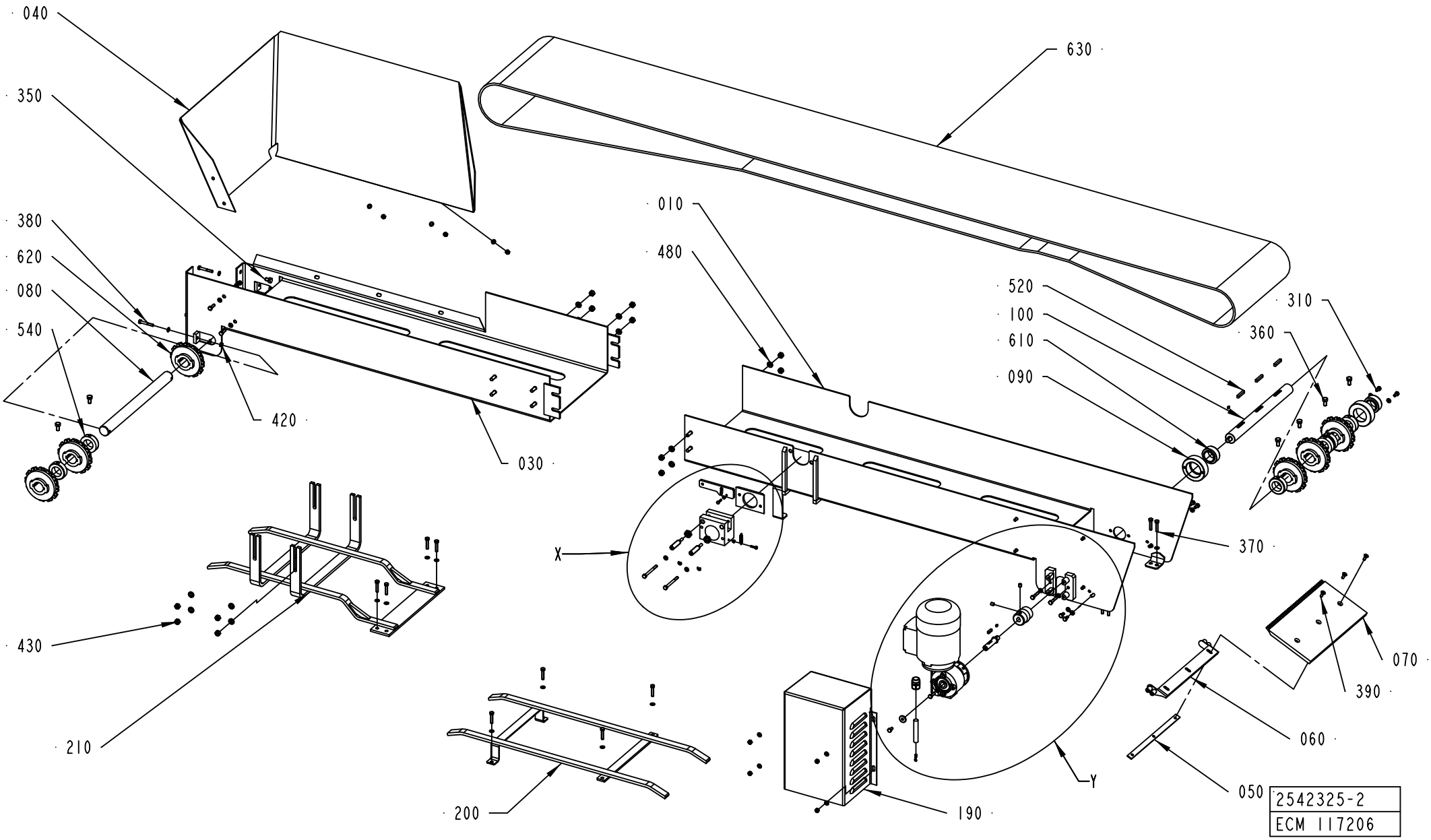

ECM: 340555 - 20080403
Group number: 2542325-0100
Assembly Drawing: 2542325-2_1_AA

This list covers pages from 2-348 to 2-353

Pos	Part No	UN	Qty	Description	Page No
A3/FLEX TBA 0500B, A3/FLEX TBA 1000B, A3/FLEX TBA 1000S, A3/FLEX TBA 1000SQ, A3/FLEX TPA 1000SQ, A3/FLEX TBA 0200S, A3/FLEX TBA 1500S, A3/FLEX TBA 0200B, A3/FLEX TBA 0250B, A3/FLEX TBA 0330S, A3/FLEX TPA 0330SQ, A3/FLEX TPA 0500SQ, A3/FLEX TBA 0200M, A3/FLEX TBA 0250S, A3/FLEX TBA 0500S, A3/FLEX TPA 0250SQ, A3/FLEX TPA 0200SQ, A3/FLEX TPA 0750SQ, A3/FLEX TBA 0200SQ, A3/FLEX TBA 0250SQ (See drawing on pages: 2-348, 2-350)					
010	2540817-0000		1	CHUTE	
030	2540813-0000		1	CHUTE	
040	2540814-0000		1	SPLASH PLATE	
110	2508390-0000		1	FASTENING PLATE	
120	1346313-0000		1	PLATE	
130	2508203-0000		1	HOLDER	
140	1349187-0000		1	SPRING	
150	1346312-0000		2	SCREW	
200	2540818-0000		1	BRACKET	
210	2540816-0000		1	BRACKET	
300	312105-0293		2	SCREW M6S ISO 4017 M4X16 A470	
310	312105-0366		7	SCREW M6S ISO 4017 M6X12 A480	
320	312105-0370		6	SCREW M6S ISO 4017 M6X20 A480	
340	312105-0383		2	SCREW M6S ISO 4014 M6X65 A480	
370	312109-0374		12	SCREW M6S ISO 4017 M6X30 A480	
410	312605-0312		2	HEXAGON NUT, M6M M4 A280	
420	312605-0316		11	HEXAGON NUT, M6M M6 A280	
430	312605-0318		12	HEXAGON NUT, M6M M8 A280	
440	312625-0322		2	HEXAGON THIN NUT, EN 24035 ML6M M12 A4	
460	315105-0153		39	WASHER BRB 6,4X12 RFR	
480	315115-0165		12	WASHER PLAIN, TBRB 8,4/16 H=3	
550	315755-0107		2	RETAINING RING SHAFT DIN 6799 5 A2	
630	2508201-0000		1	CONVEYOR CHAIN	
A3/FLEX TBA 1890S, A3/FLEX TBA 2000S, A3/FLEX TBA 1400B (See drawing on pages: 2-348, 2-350)					
010	2540817-0000		1	CHUTE	
030	2679599-0000		1	CHUTE	
040	2679598-0000		1	SPLASH PLATE	
110	2508390-0000		1	FASTENING PLATE	
120	1346313-0000		1	PLATE	
130	2508203-0000		1	HOLDER	
140	1349187-0000		1	SPRING	
150	1346312-0000		2	SCREW	
200	2540818-0000		1	BRACKET	
210	2540816-0000		1	BRACKET	
300	312105-0293		2	SCREW M6S ISO 4017 M4X16 A470	
310	312105-0366		7	SCREW M6S ISO 4017 M6X12 A480	
320	312105-0370		6	SCREW M6S ISO 4017 M6X20 A480	
340	312105-0383		2	SCREW M6S ISO 4014 M6X65 A480	
370	312109-0374		12	SCREW M6S ISO 4017 M6X30 A480	
410	312605-0312		2	HEXAGON NUT, M6M M4 A280	
420	312605-0316		11	HEXAGON NUT, M6M M6 A280	
430	312605-0318		12	HEXAGON NUT, M6M M8 A280	
440	312625-0322		2	HEXAGON THIN NUT, EN 24035 ML6M M12 A4	
460	315105-0153		39	WASHER BRB 6,4X12 RFR	
480	315115-0165		12	WASHER PLAIN, TBRB 8,4/16 H=3	
550	315755-0107		2	RETAINING RING SHAFT DIN 6799 5 A2	
630	2508201-0000		1	CONVEYOR CHAIN	
A3/FLEX TGA 1000SQ, A3/FLEX TGA 0500SQ, A3/FLEX TGA 0750SQ (See drawing on page: 2-352)					
010	2810648-0000		1	CHUTE	
210	2792838-0000		1	BRACKET	
220	1346525-0000		1	COVER	
230	2856532-0000		2	SPACER	
310	312105-0366		11	SCREW M6S ISO 4017 M6X12 A480	
320	312105-0370		6	SCREW M6S ISO 4017 M6X20 A480	
370	312109-0374		6	SCREW M6S ISO 4017 M6X30 A480	
420	312605-0316		8	HEXAGON NUT, M6M M6 A280	
460	315105-0153		32	WASHER BRB 6,4X12 RFR	
630	2792837-0000		1	CONVEYOR CHAIN	
900	312105-0460		2	SCREW M6S ISO 4014 M8X45 A480	
910	315105-0173		4	WASHER BRB 10,5X22 RFR	
920	312105-0451		2	SCREW M6S ISO 4017 M8X20 A480	
930	312605-0318		2	HEXAGON NUT, M6M M8 A280	
Common Parts					
050	1129253-0000		1	FASTENING PLATE	
060	1296845-0000		1	BRACKET	
070	2508192-0000		1	GUARD PLATE	
080	1037562-0000		1	SHAFT	
090	1348386-0000		2	BEARING HOUSING	
100	2508196-0000		1	DRIVE SHAFT	
160	445848-0000		1	ELASTIC COUPLING	
170	2508200-0000		1	SHAFT	
180	2529670-0000		1	WASHER	
190	2529579-0000		1	COVER	
330	312105-0374		2	SCREW M6S ISO 4014 M6X30 A480	
350	312105-0447		2	SCREW M6S ISO 4017 M8X12 A480	
360	312105-0449		6	SCREW M6S ISO 4017 M8X16 A480	
380	312109-0378		2	SCREW M6S ISO 4017 M6X40 A480	
390	312155-0368		3	SCREW DIN 7991 MF6S M6X16 A4 70	
400	312318-0443		2	SCREW ISO4029 M8X8 A4	

Machine Type | Group Description | Used-In | Group Number | Page No

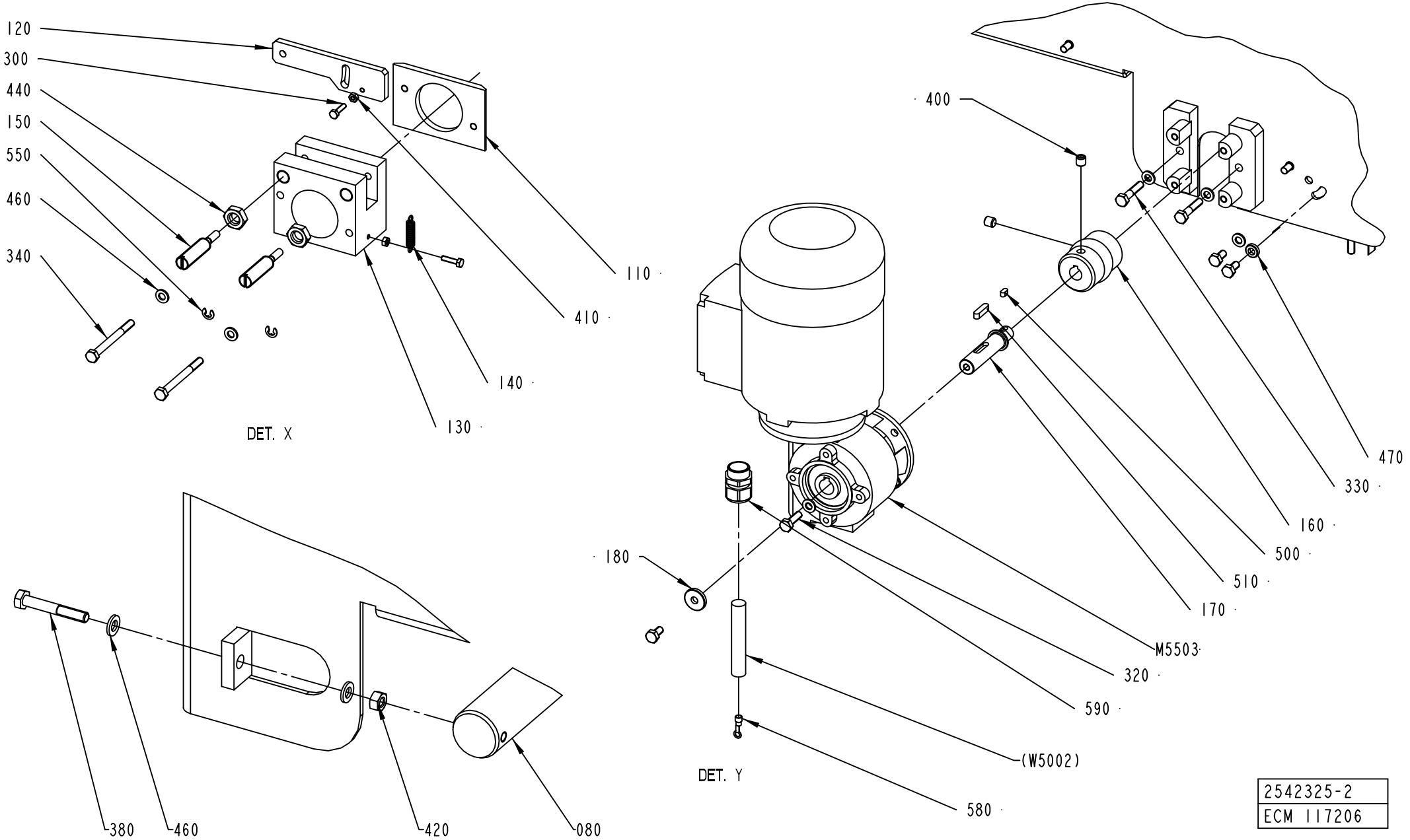

2542325-2
ECM 117206

Pos	Part No	UN	Qty	Description	Page No
Common Parts (Cont'd)					
470	315115-0153		2	WASHER PLAIN, TBRB 6,4/12 H=3	
500	315705-0164		2	PARALLEL KEY W. ROUND ENDS 4X4X8 MM	
510	315705-0201		1	PARALLEL KEY W. ROUND ENDS 5X5X20 MM	
520	315705-0238		3	PARALLEL KEY W. ROUND ENDS 6X6X36 MM	
540	315742-0122		6	RETAINING RING 30 SMS 199	
580	353101-0130		1	CABLE SHOE 1,5-2,5MM2 M4 BLUE	
590	353240-0002		1	GLAND W/O INSERT PG11 NORMAL	
610	90240-0315		2	SPHER. BEARING, 30X47X22 PLASTIC MM	
620	90344-0073		6	TOOTHED WHEEL	
M5503	90459-1147		1	GEARS, WORM MOTOR VF30 F1-10 P63 B14 V6	

Pos	Part No	UN	Qty	Description	Page No

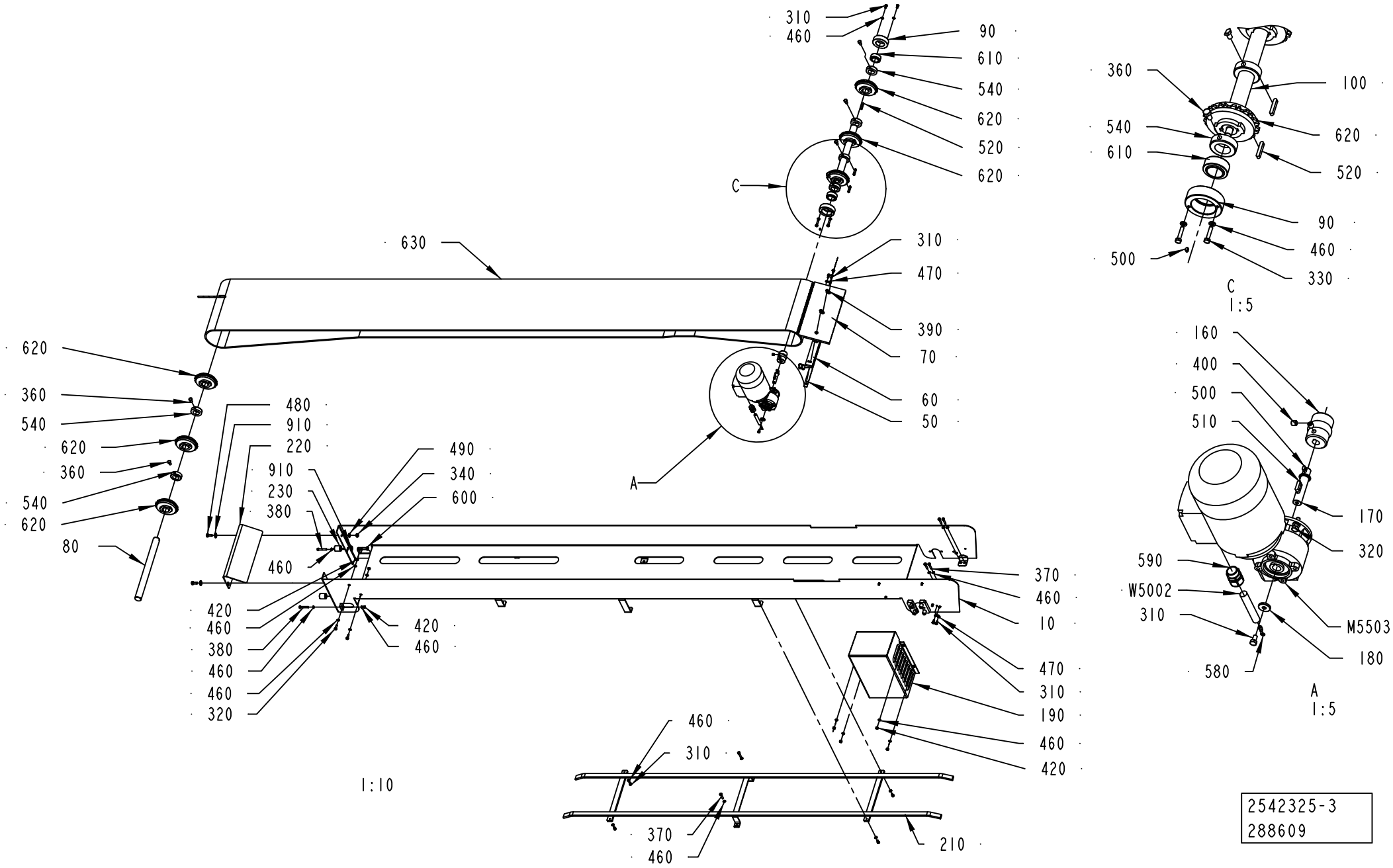
310
460
90
610
540
620
520
620
C
630
310
470
390
70
60
50
620
360
540
620
360
540
620
80
480
910
220
910
230
380
490
340
600
460
A
420
460
380
460
460
320
420
460
370
460
10
470
310
190
460
420
460
310
370
460
210
1:10
360
100
540
620
610
520
90
460
330
500
C
1:5
160
400
500
510
170
320
590
W5002
310
M5503
180
580
A
1:5
2542325-3
288609

Pos	Part No	UN	Qty	Description	Page No

SEE PREVIOUS LISTS PAGES: 2-349, 2-351.

Pos	Part No	UN	Qty	Description	Page No

Tetra Pak

SPC
Spare Parts Catalogue

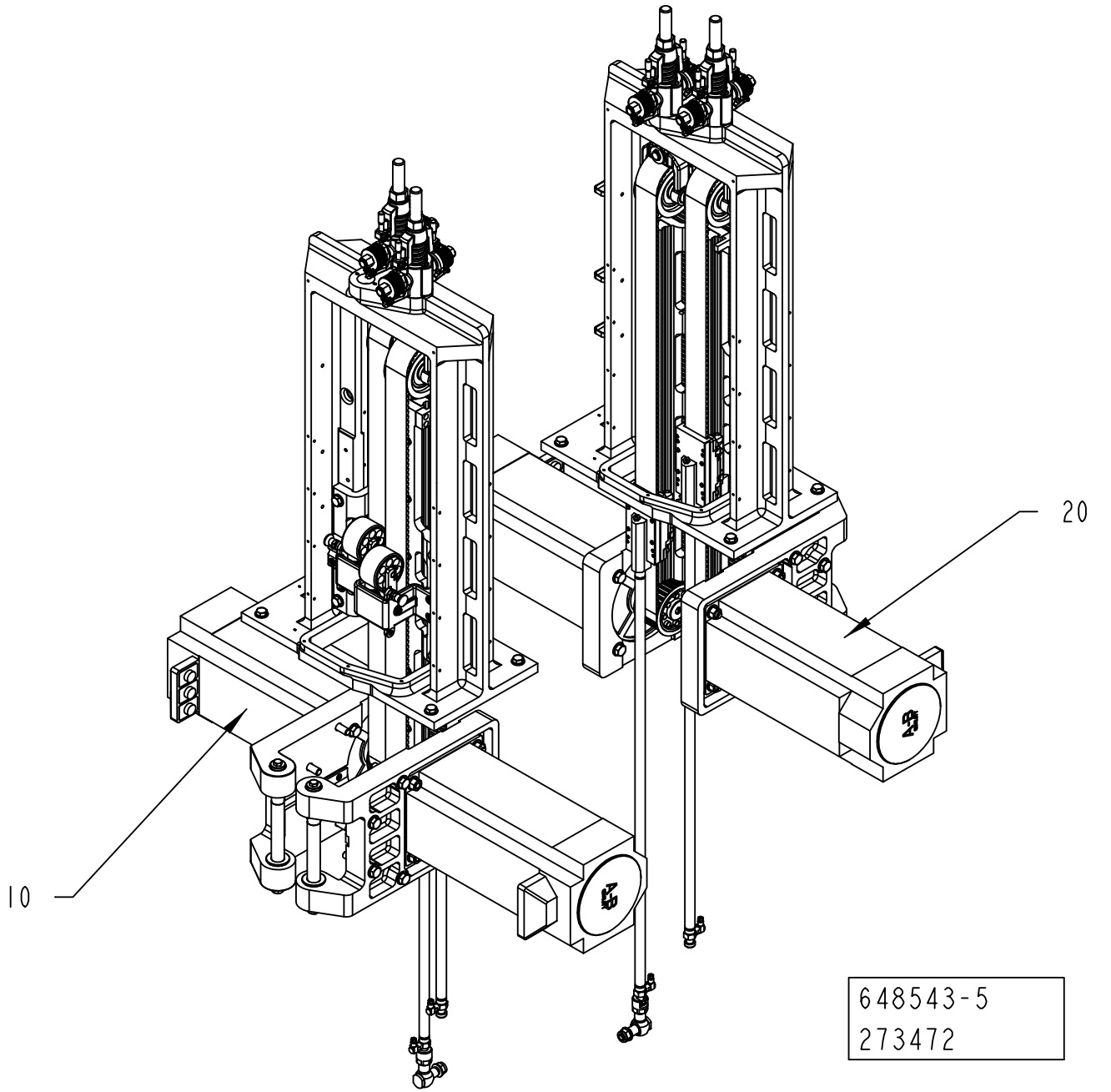
20
10
648543-5
273472

ECM: 273478 - 20061101
Group number: 648543-0450
Assembly Drawing: 648543-5_1_AA

Pos	Part No	UN	Qty	Description	Page No
-					
010	2552077-0250		1	DRIVE UNIT	**3-5**
020	2552078-0250		1	DRIVE UNIT	**3-29**

Pos	Part No	UN	Qty	Description	Page No

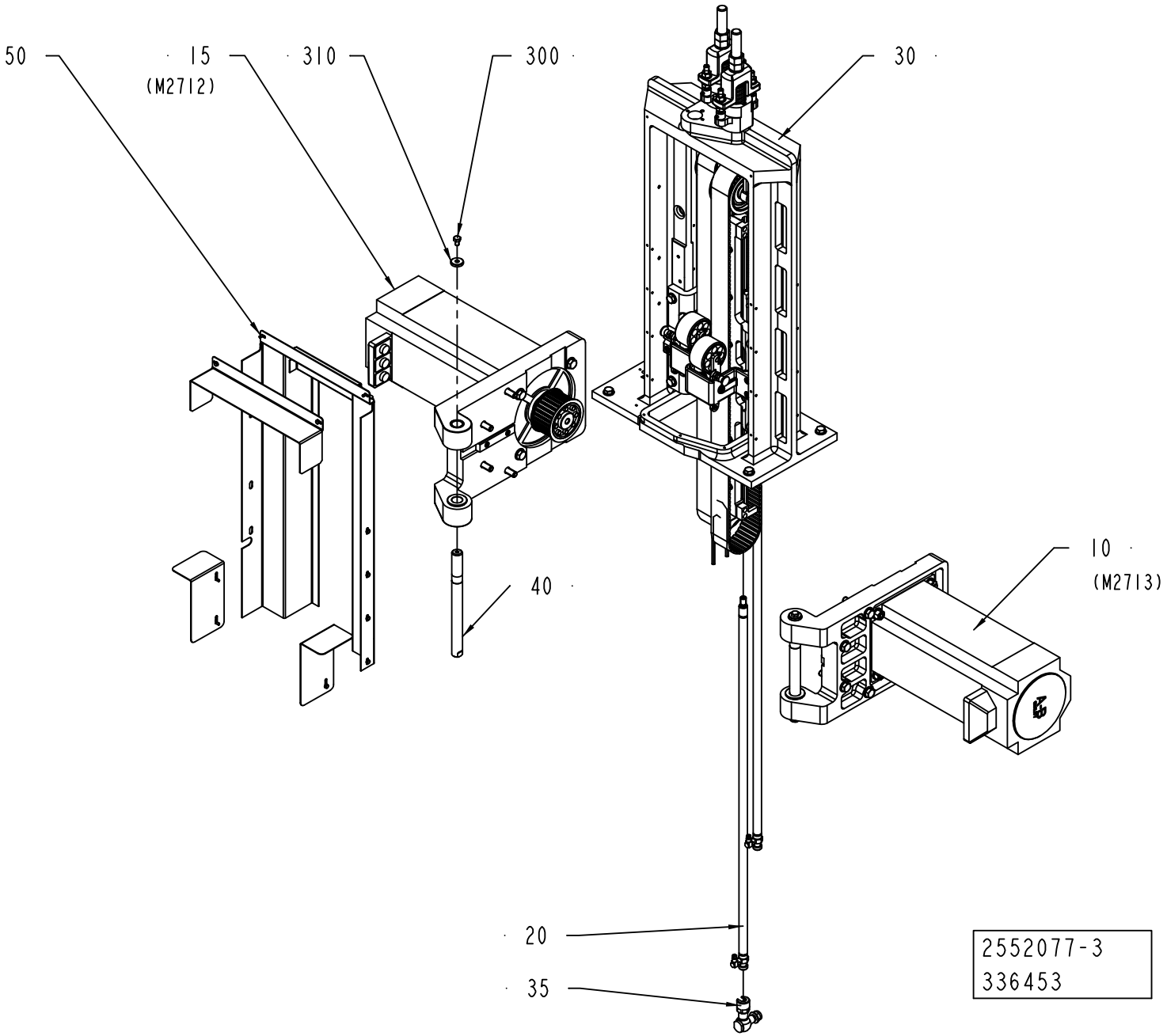
50
15
(M2712)
310
300
30
10
(M2713)
40
20
35
2552077-3
336453

ECM: 337143 - 20080401
Group number: 2552077-0250
Assembly Drawing: 2552077-3_1_AB

Pos	Part No	UN	Qty	Description	Page No
-					
010	2792661-0100		1	MOTOR UNIT	**3-7**
015	2792662-0100		1	MOTOR UNIT	**3-9**
020	2552080-0100		2	LINK	**3-11**
030	2552110-0200		1	SUPPORT	**3-13**
035	1490994-0100		1	LINK	**3-25**
040	2533638-0000		2	AXLE PIN	
050	2945379-0100		1	COVER	**3-27**
300	312105-0447		2	SCREW M6S ISO 4017 M8X12 A480	
310	315125-0165		2	WASHER TBRSB 8,4X26X5 A4	

Pos	Part No	UN	Qty	Description	Page No

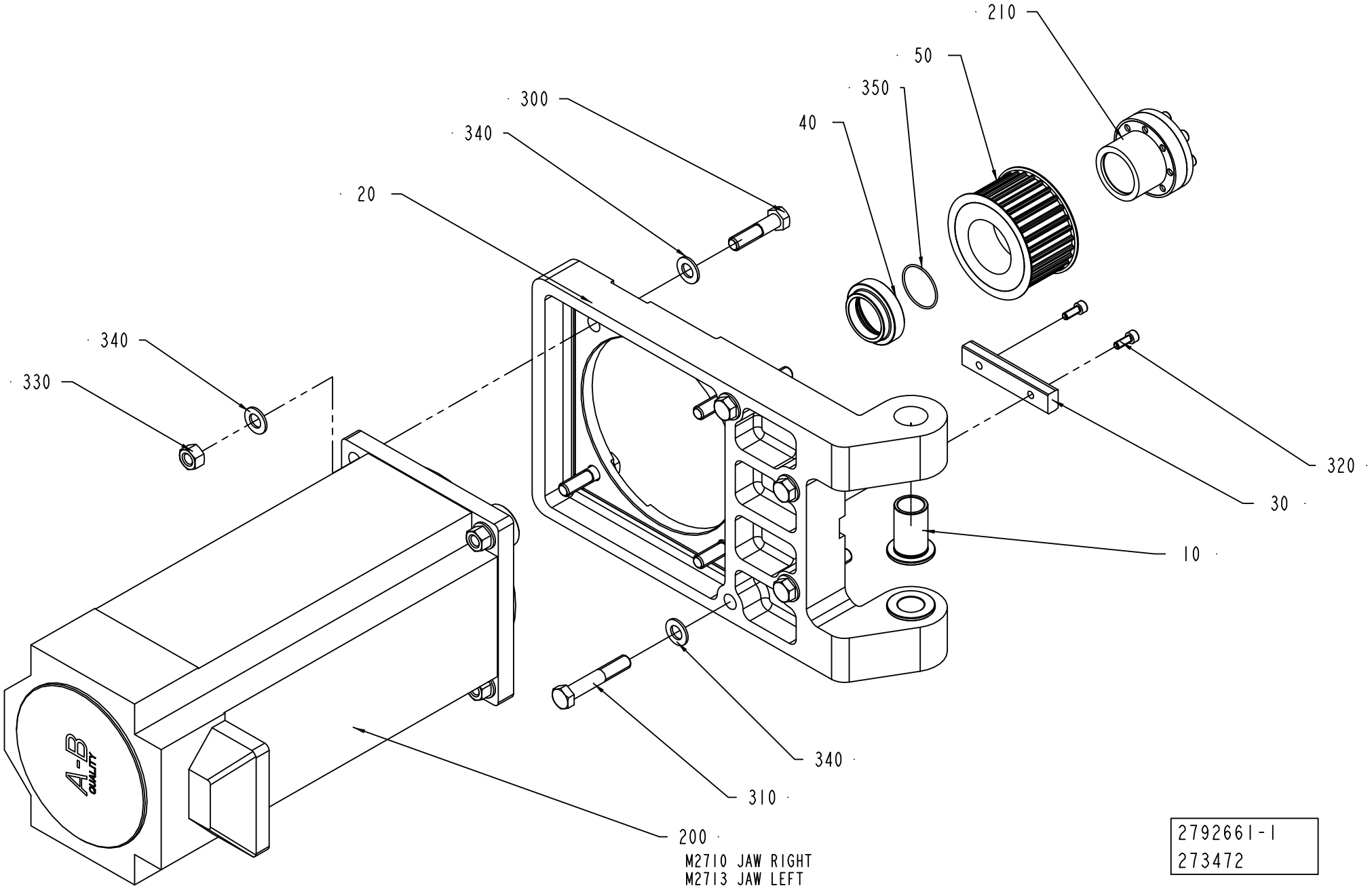
210
50
350
40
300
340
20
340
330
320
30
10
340
310
200
M2710 JAW RIGHT
M2713 JAW LEFT
2792661-1
273472

ECM: 324826 - 20080102
Group number: 2792661-0100
Assembly Drawing: 2792661-1_1_AA

Pos	Part No	UN	Qty	Description	Page No
-					
010	1255233-0000		2	BUSHING	
020	1255261-0000		1	FLANGE	
030	2545017-0000		1	PARALLEL KEYS WITH ROUND ENDS	
040	2730770-0000		1	SPACER	
050	1347839-0000		1	PULLEY	
200	90459-2594		1	SERVO MOTOR MPL-B680B-MX141	
210	90458-2303		1	CLAMPING ELEMENT WITH SLEEVE, 38X50 MM	
300	312105-0542		4	SCREW M6S ISO 4014 M12X50 A480	
310	312105-0546		4	SCREW M6S ISO 4014 M12X70 A480	
320	312115-0368		2	SCREW ISO4762 M6X16 A4 80	
330	312601-0322		4	HEXAGON NUT, DIN 934 M12 8 FZB	
340	315105-0178		12	WASHER BRB 13X24 RFR	
350	315202-0124		1	O-RING 37,1X1,6 MM	

Pos	Part No	UN	Qty	Description	Page No

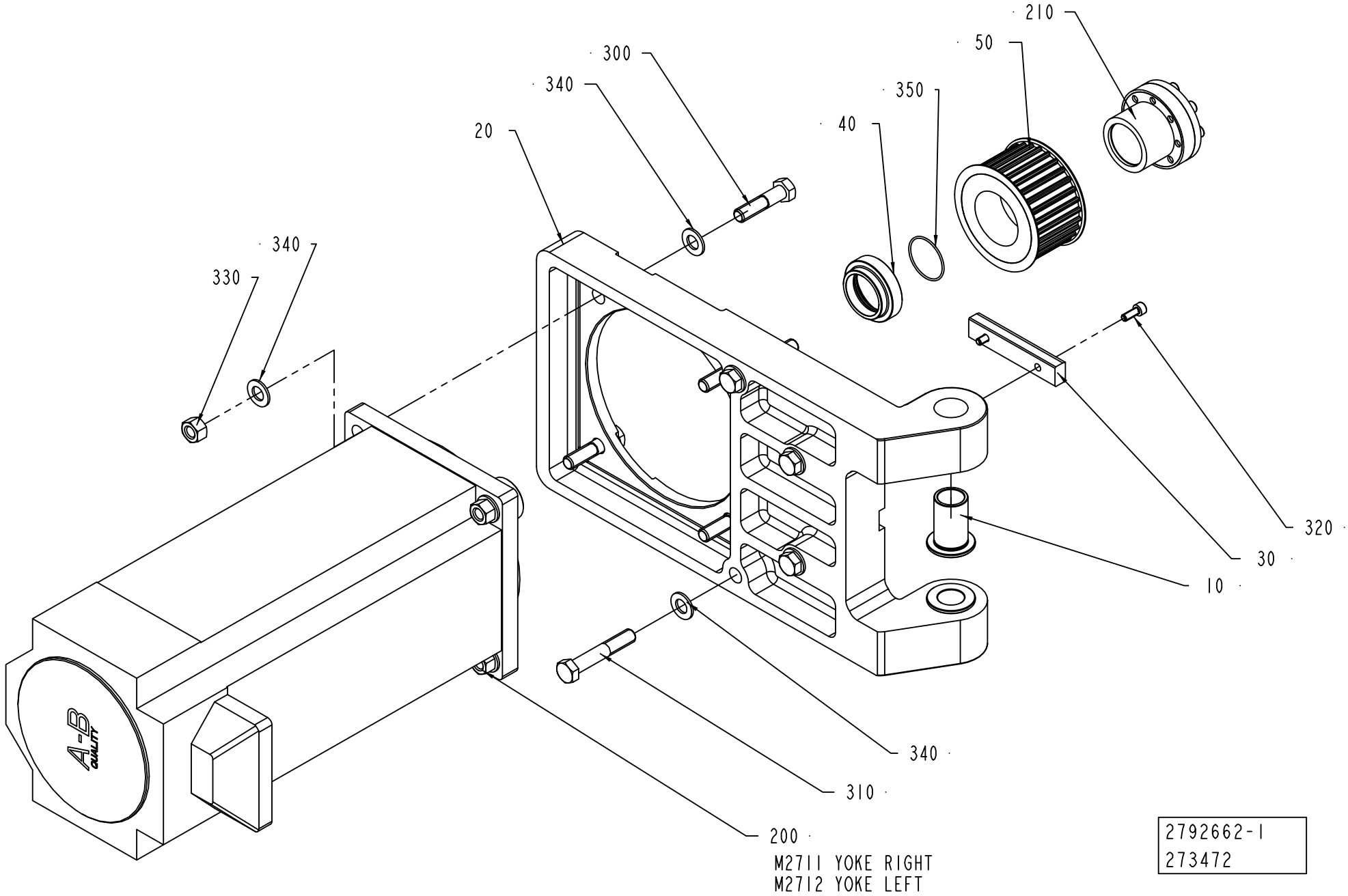
210
50
300
340
350
40
20
340
330
320
30
10
340
310
200
M2711 YOKE RIGHT
M2712 YOKE LEFT
2792662-1
273472

ECM: 324827 - 20080102
Group number: 2792662-0100
Assembly Drawing: 2792662-1_1_AA

Pos	Part No	UN	Qty	Description	Page No
-					
010	1255233-0000		2	BUSHING	
020	2686316-0000		1	FLANGE	
030	2545017-0000		1	PARALLEL KEYS WITH ROUND ENDS	
040	2730770-0000		1	SPACER	
050	1347839-0000		1	PULLEY	
200	90459-2594		1	SERVO MOTOR MPL-B680B-MX141	
210	90458-2303		1	CLAMPING ELEMENT WITH SLEEVE, 38X50 MM	
300	312105-0542		4	SCREW M6S ISO 4014 M12X50 A480	
310	312105-0546		4	SCREW M6S ISO 4014 M12X70 A480	
320	312115-0368		2	SCREW ISO4762 M6X16 A4 80	
330	312601-0322		4	HEXAGON NUT, DIN 934 M12 8 FZB	
340	315105-0178		12	WASHER BRB 13X24 RFR	
350	315202-0124		1	O-RING 37,1X1,6 MM	

Pos	Part No	UN	Qty	Description	Page No

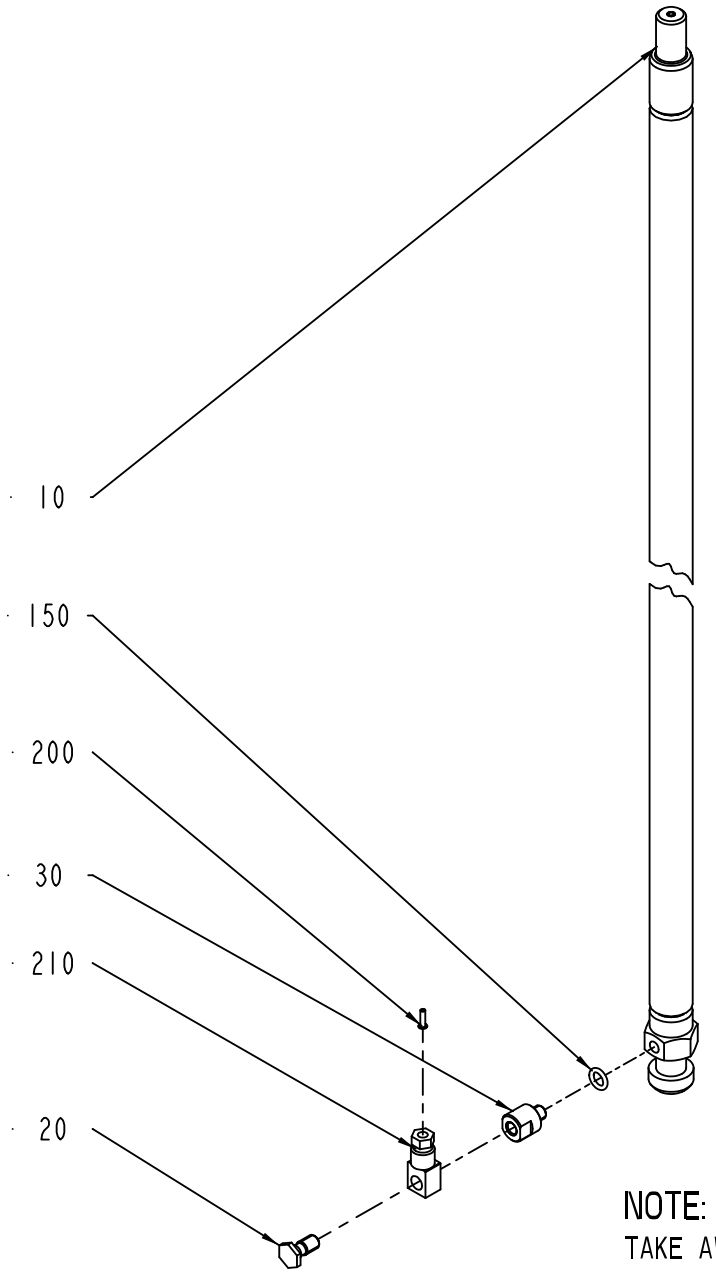

NOTE:
TAKE AWAY STANDARD SCREW AND MOUNTED SCREW POS.20

2552080-1
ECM 106141

ECM: 189452 - 20041104
Group number: 2552080-0100
Assembly Drawing: 2552080-1_1_AA

Pos	Part No	UN	Qty	Description	Page No
-					
010	1334653-0000		1	LINK	
020	1334659-0000		1	SCREW	
030	2529187-0000		1	SPACER	
150	315202-0505		1	O-RING 6,07X1,78 MM	
200	90134-0031		1	SLEEVE FOR PLASTIC TUBE	
210	90134-0068		1	CONNECTION	

Pos	Part No	UN	Qty	Description	Page No

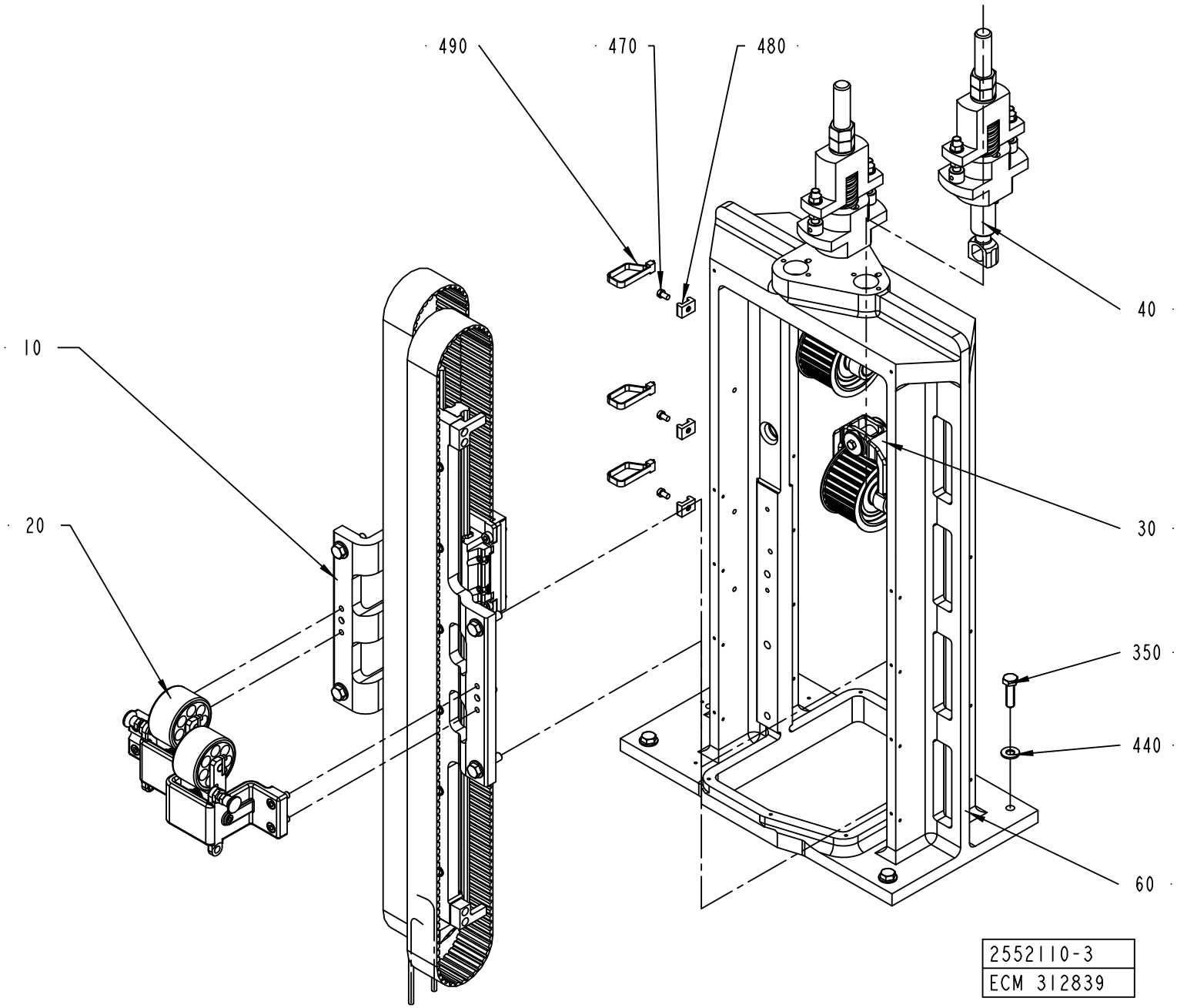
490
470
480
40
10
30
20
350
440
60
2552110-3
ECM 312839

ECM: 317531 - 20080101
Group number: 2552110-0200
Assembly Drawing: 2552110-3_1_AA

Pos	Part No	UN	Qty	Description	Page No
-					
010	1350217-0150		1	GUIDE	**3-15**
020	1487629-0100		1	DAMPER	**3-19**
030	2803072-0100		2	PULLEY	**3-21**
040	2872687-0100		2	BELT TENSIONER	**3-23**
060	1255222-0000		1	FRAME	
350	312105-0497		4	SCREW M6S ISO 4017 M10X35 A480	
440	315105-0173		4	WASHER BRB 10,5X22 RFR	
470	312125-0364		3	SCREW ISO 1207 M6X10 A4	
480	352113-0204		3	ANCHOR PLATES FOR STRIPS, TYPE TM3S25-M	
490	352113-0103		3	CABLE TIE, BLACK 290X7,6 MM	

Pos	Part No	UN	Qty	Description	Page No

Machine Type | Group Description | Used-In | Group Number | Page No

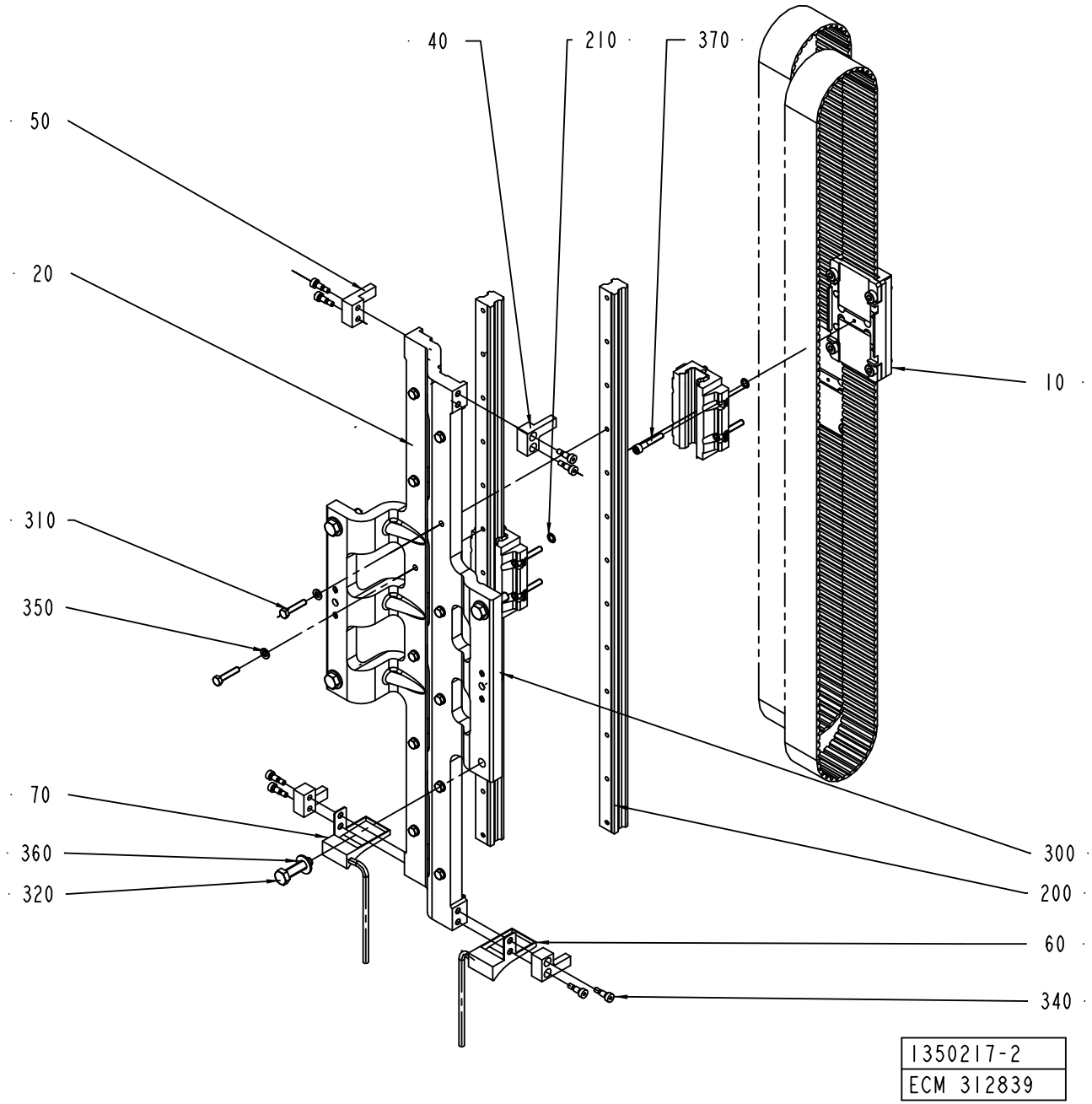
40
210
370
50
20
10
310
350
70
360
320
300
200
60
340
1350217-2
ECM 312839

ECM: 342876 - 20080215
Group number: 1350217-0150
Assembly Drawing: 1350217-2_1_AB

Pos	Part No	UN	Qty	Description	Page No
-					
010	1350210-0100		2	RUNNER	**3-17**
020	1255223-0000		1	HOLDER	
040	1350825-0000		2	LOCK	
050	1350826-0000		2	LOCK	
060	2894044-0000		1	DRIP PLATE	
070	2912332-0000		1	DRIP PLATE	
200	90458-2307		2	LINEAR UNIT HSR25	
210	90459-1411		2	O-RING 7,8X1,9 MM	
300	311103-1456		2	PARALLEL PIN ISO 2338 10M6X24 A1	
310	312109-0374		12	SCREW M6S ISO 4017 M6X30 A480	
320	312109-0499		4	SCREW M6S ISO 4017 M10X40 A480	
340	312180-0364		8	SCREW ISO7379 H6X10	
350	315105-0153		12	WASHER BRB 6,4X12 RFR	
360	315105-0173		4	WASHER BRB 10,5X22 RFR	
370	312115-0376		8	SCREW ISO4762 M6X35 A4 80	

Pos	Part No	UN	Qty	Description	Page No

Machine Type | Group Description | Used-In | Group Number | Page No

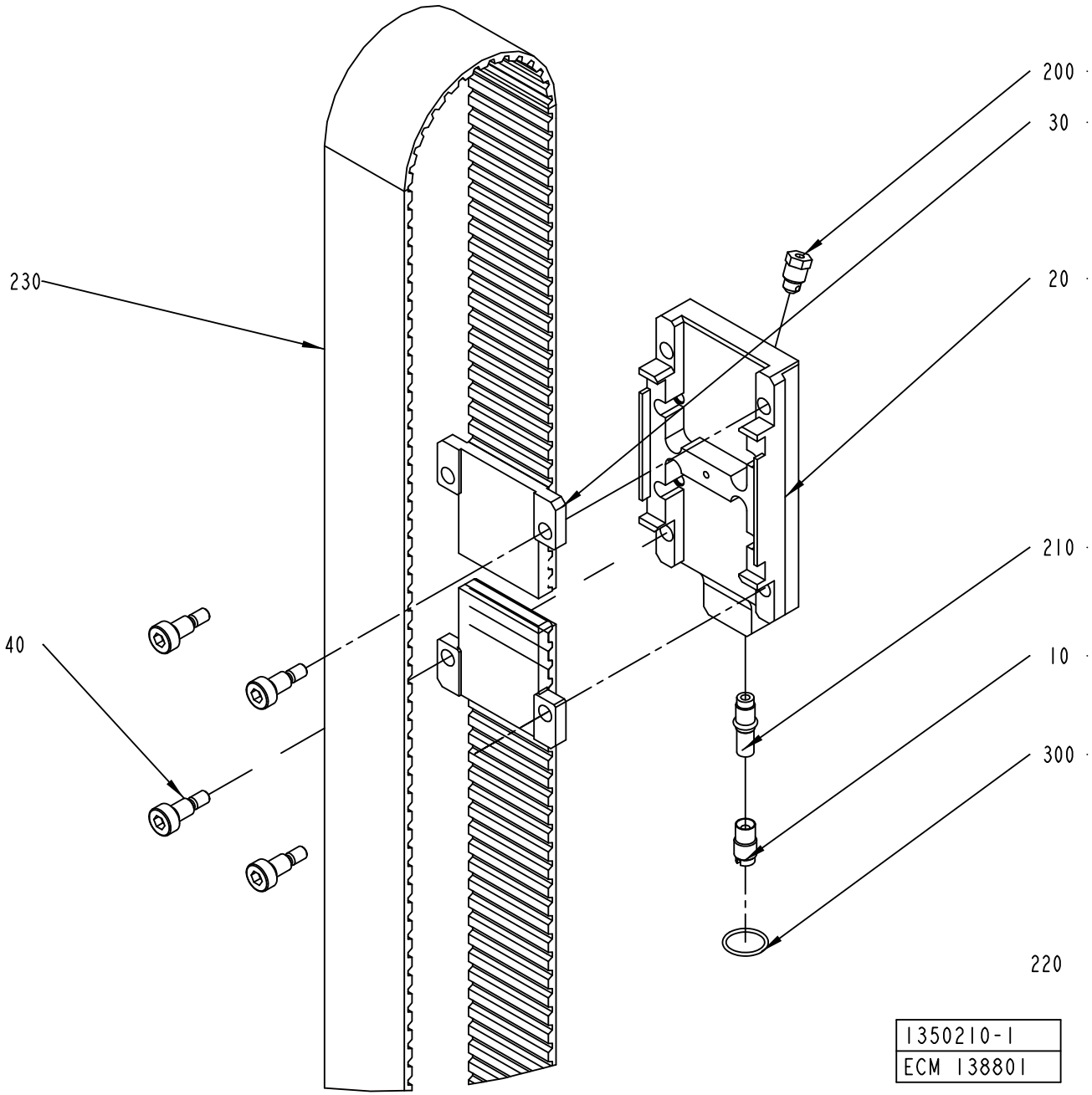
200
30
230
20
210
40
10
300
220
1350210-1
ECM 138801

ECM: 342875 - 20080215
Group number: 1350210-0100
Assembly Drawing: 1350210-1_1_AB

Pos	Part No	UN	Qty	Description	Page No
-					
010	1334939-0000		1	PLUG	
020	1346845-0000		1	PLATE	
030	1346846-0000		2	BELT HOLDER	
040	2640819-0000		4	SCREW	
200	90087-0019		1	PLUG M10X1 STAINLESS	
210	90092-0053		1	METERING VALVE 30 MM3	
220	90296-0068	G	5	SHELL ALVANIA GREASE EP 2	
230	90458-2306		1	TIMING BELT ATL10 2020X50 MM	
300	315202-0115		1	O-RING 17,1X1,6 MM	

Pos	Part No	UN	Qty	Description	Page No

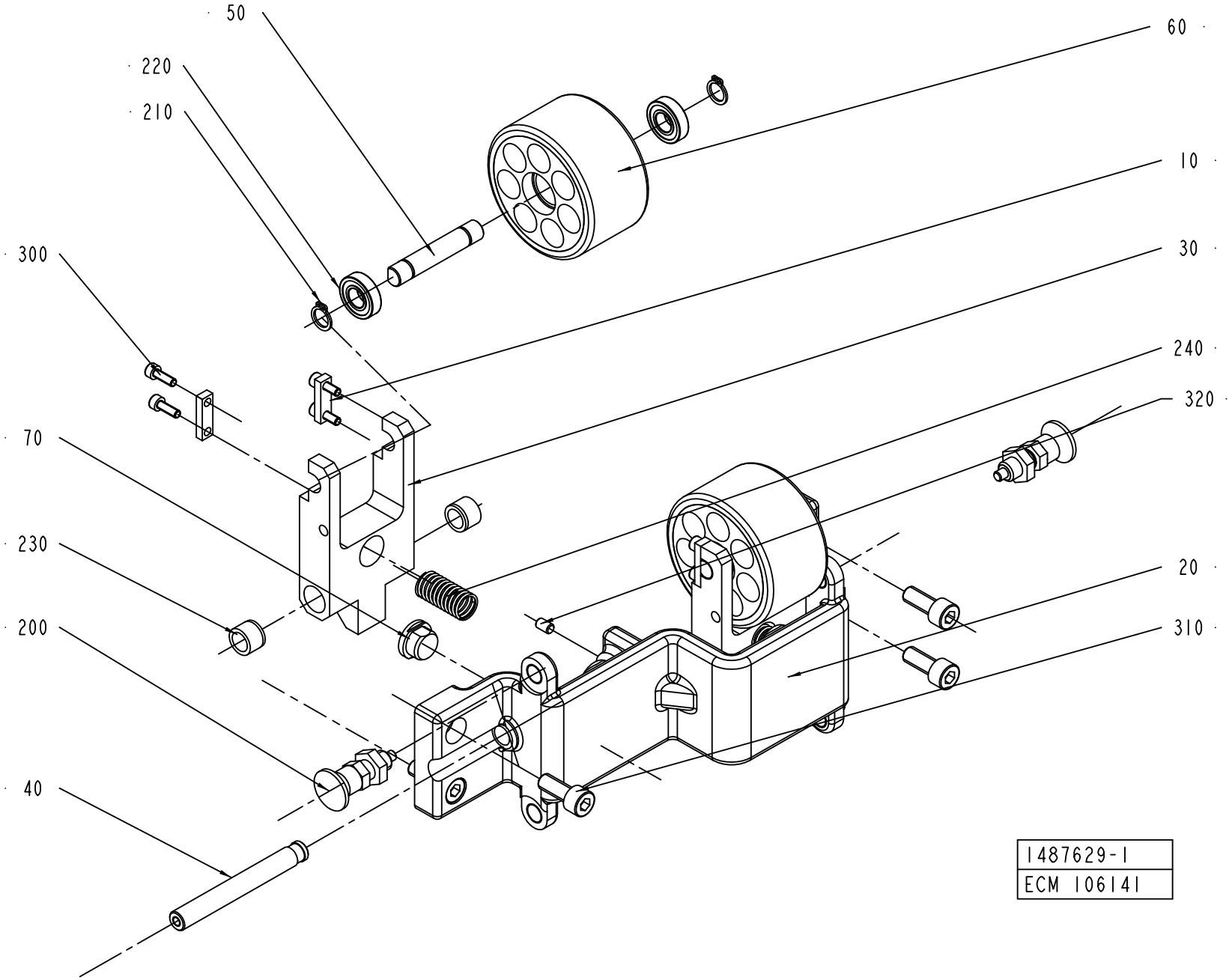
50
220
210
300
70
230
200
40
60
10
30
240
320
20
310
1487629-1
ECM 106141

ECM: 293969 - 20070701
Group number: 1487629-0100
Assembly Drawing: 1487629-1_1_AA

Pos	Part No	UN	Qty	Description	Page No
-					
010	1349266-0000		4	PLATE	
020	1487631-0000		1	BRACKET	
030	1487632-0000		2	FORK	
040	1487633-0000		2	AXLE PIN	
050	1487634-0000		2	AXLE PIN	
060	1487635-0000		2	WHEEL	
070	1487636-0000		2	STOPPER	
200	90051-0112		2	LOCK KNOB, NO. GN 617 NIK5	
210	90141-0016		4	RETAINING RING FOR SHAFT DIN 471 10 SS	
220	90214-0036		4	BALL BEARING, 10X22X6 MM	
230	90240-0119		4	BEAR. BUSHING WITHOUT FL	
240	90458-2305		2	COMP. SPRING D22280	
300	312115-0291		8	SCREW ISO4762 M4X12 A4 80	
310	312115-0451		4	SCREW ISO4762 M8X20 A4 80	
320	312318-0323		2	SCREW ISO4029 M5X8 A4	

Pos	Part No	UN	Qty	Description	Page No

Machine Type	Group Description	Used-In	Group Number	Page No

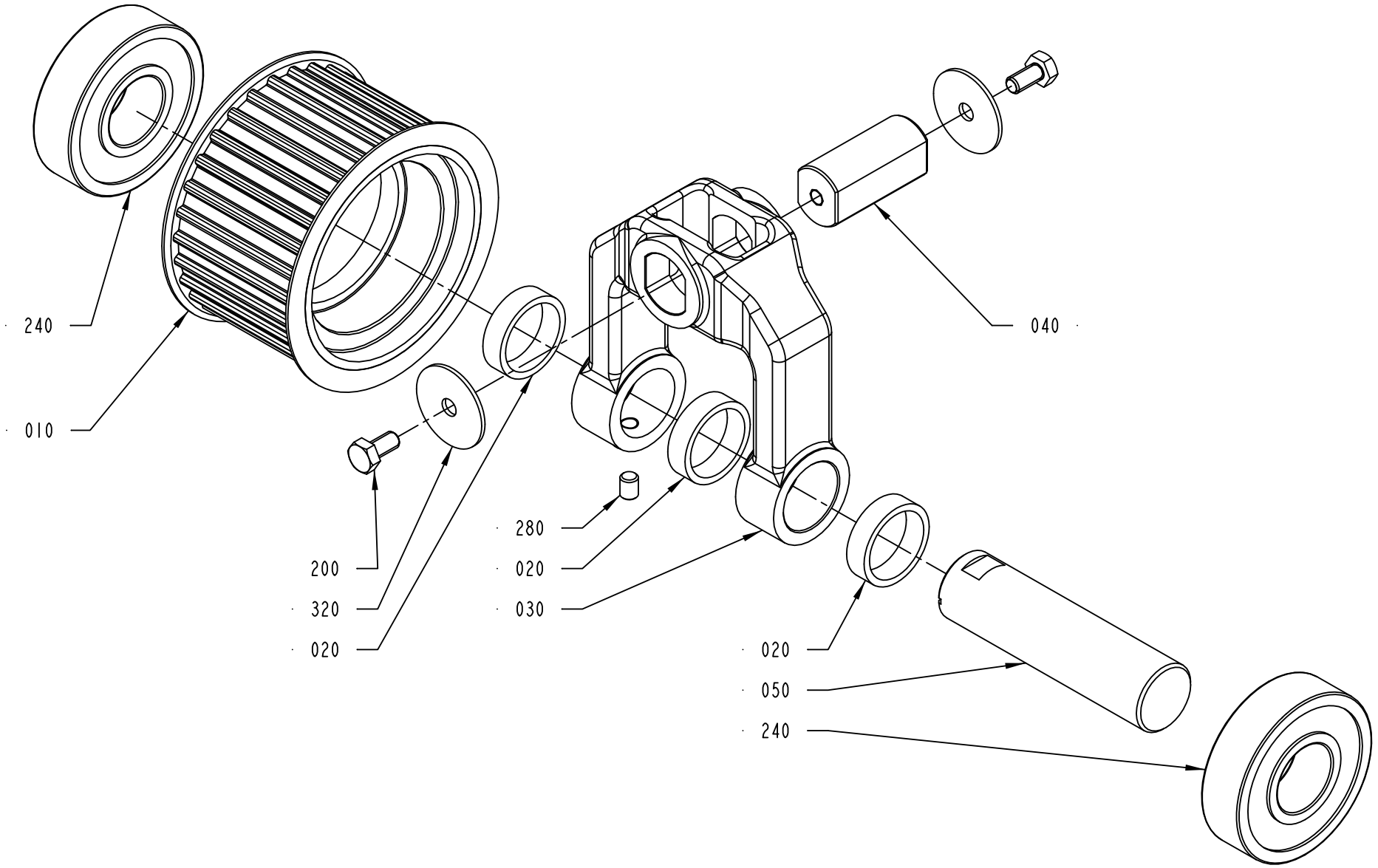
240
010
200
320
020
280
020
030
040
020
050
240
2803072-1
293653

ECM: 342877 - 20080215
Group number: 2803072-0100
Assembly Drawing: 2803072-1_1_AA

Pos	Part No	UN	Qty	Description	Page No
-					
010	2802756-0000		1	PULLEY	
020	1346890-0000		3	SPACER	
030	2802611-0000		1	SUPPORT PULLEY	
040	2802624-0000		1	AXLE PIN	
050	1511195-0000		1	SHAFT	
200	312105-0366		2	SCREW M6S ISO 4017 M6X12 A480	
240	321316-0205		2	BALL BEARING, 25X62X17 MM	
280	312318-0362		1	SCREW ISO4029 M6X8 A4	
320	90458-0073		2	WASHER 6,4/30, H=1,5	

Pos	Part No	UN	Qty	Description	Page No

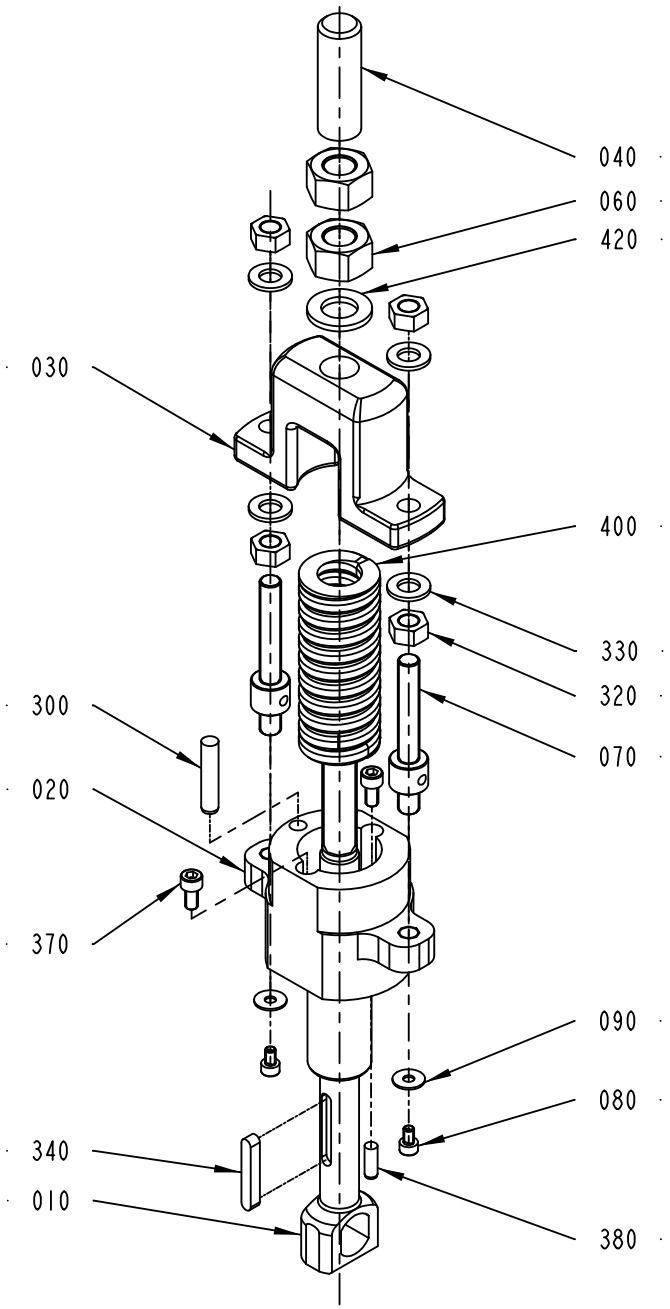
040
060
420
030
400
330
320
300
070
020
370
090
080
340
010
380
2872687-1
336453

ECM: 370965 - 20090101
Group number: 2872687-0100
Assembly Drawing: 2872687-1_1_AC

Pos	Part No	UN	Qty	Description	Page No
-					
010	2802625-0000		1	SHAFT	
020	2909504-0000		1	BUSHING	
030	2909505-0000		1	ROCKER	
040	2525570-0000		1	COVER	
060	2640826-0000		2	NUT	
070	2890567-0000		2	SHAFT	
080	312115-0323		2	SCREW ISO4762 M5X8 A4 80	
090	315125-0146		2	WASHER TBRSB 5.3X15X1 A4	
300	311103-0409		1	PARALLEL PIN ISO 2338 8M6X40 A1	
320	312607-0320		4	HEXAGON NUT, EN 24032 M6M M10 A480	
330	315106-0173		4	WASHER ISO 7089-10-200 HV A4	
340	315705-0239		1	PARALLEL KEY W. ROUND ENDS 6X6X40 MM	
370	312115-0366		2	SCREW ISO4762 M6X12 A4 80	
380	311103-0352		1	PARALLEL PIN ISO 2338 6M6X18 A1	
400	90458-2301		1	SPRING, YELLOW SPRING G40X115	
420	315105-0186		1	WASHER BRB 17X30 RFR	

Pos	Part No	UN	Qty	Description	Page No

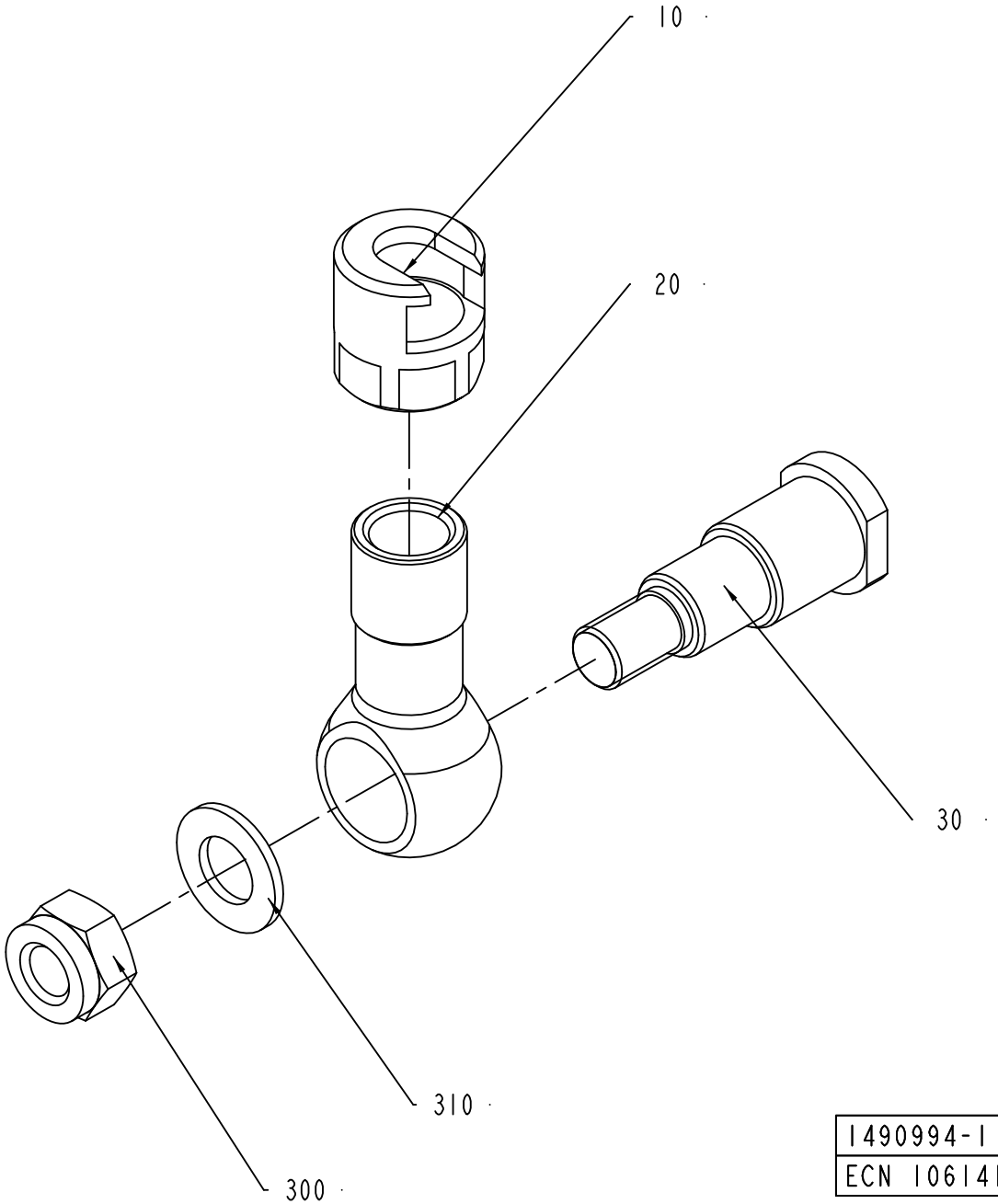
10
20
30
310
300
1490994-1
ECN 106141

ECM: 189458 - 20041104
Group number: 1490994-0100
Assembly Drawing: 1490994-1_1_AA

Pos	Part No	UN	Qty	Description	Page No
-					
010	1334654-0000		1	CONNECTION CLAMP	
020	1334655-0000		1	LINK ROD	
030	1350824-0000		1	AXLE PIN	
040	312812-0322		1	HEXAGON NUT, NY-LOCK M12 A480	
050	315105-0178		1	WASHER BRB 13X24 RFR	

Pos	Part No	UN	Qty	Description	Page No

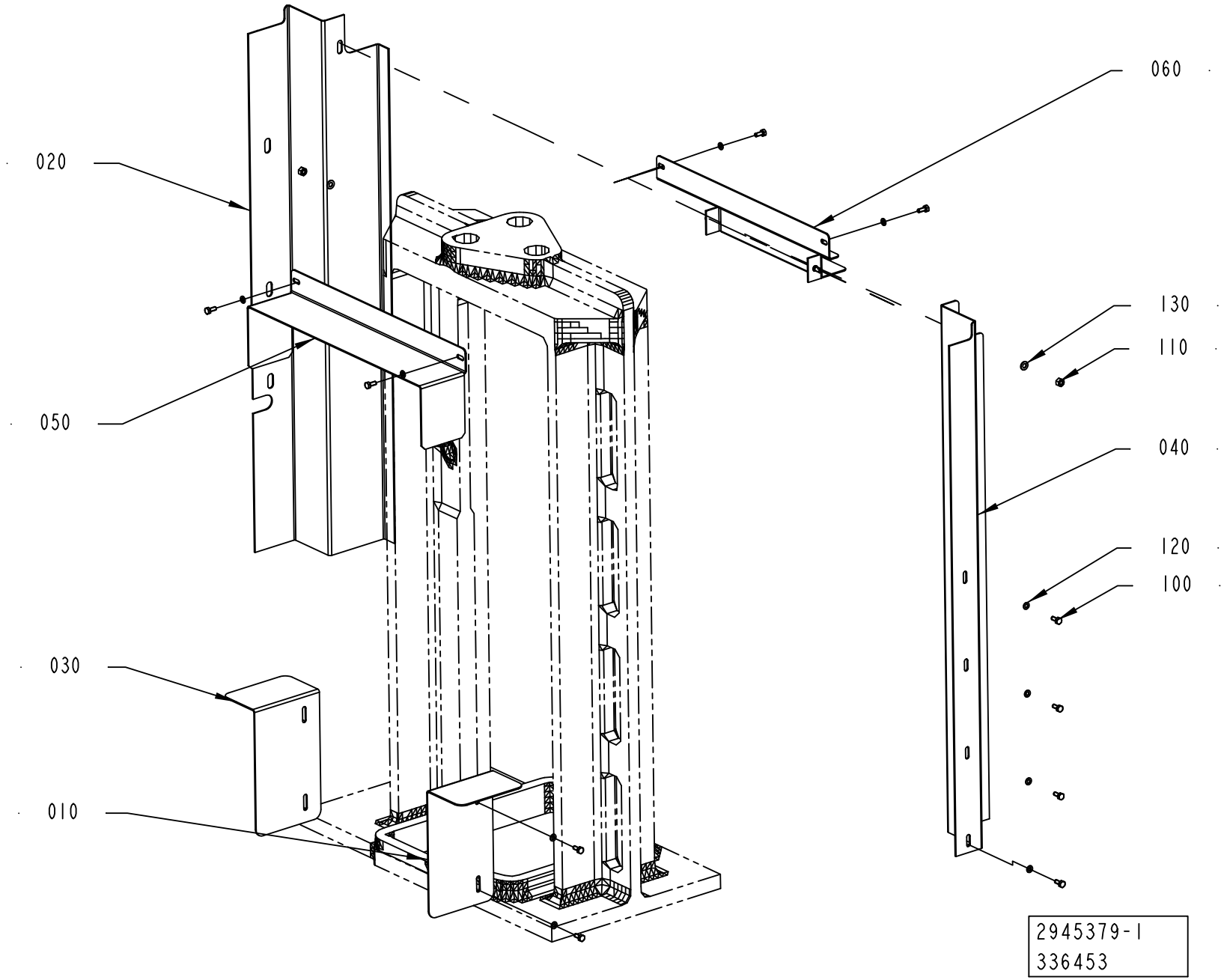
060
020
130
110
050
040
120
100
030
010
2945379-1
336453

ECM: 347806 - 20080701
Group number: 2945379-0100
Assembly Drawing: 2945379-1_1_AA

Pos	Part No	UN	Qty	Description	Page No
A3/FLEX					
010	2944623-0000		1	COVER	
020	2944624-0000		1	COVER	
040	2944626-0000		1	COVER	
050	2945372-0000		1	COVER	
100	312105-0289		12	SCREW M6S H4X10 A4 70 ISO4017/DIN933	
120	315105-0136		12	WASHER BRB 4,3X8 RFR	
Common Parts					
030	2944627-0000		1	COVER	
060	2944625-0000		1	COVER	
110	312605-0314		2	HEXAGON NUT, M6M M5 A280	
130	315105-0146		2	WASHER BRB 5,3X10 RFR	

Pos	Part No	UN	Qty	Description	Page No

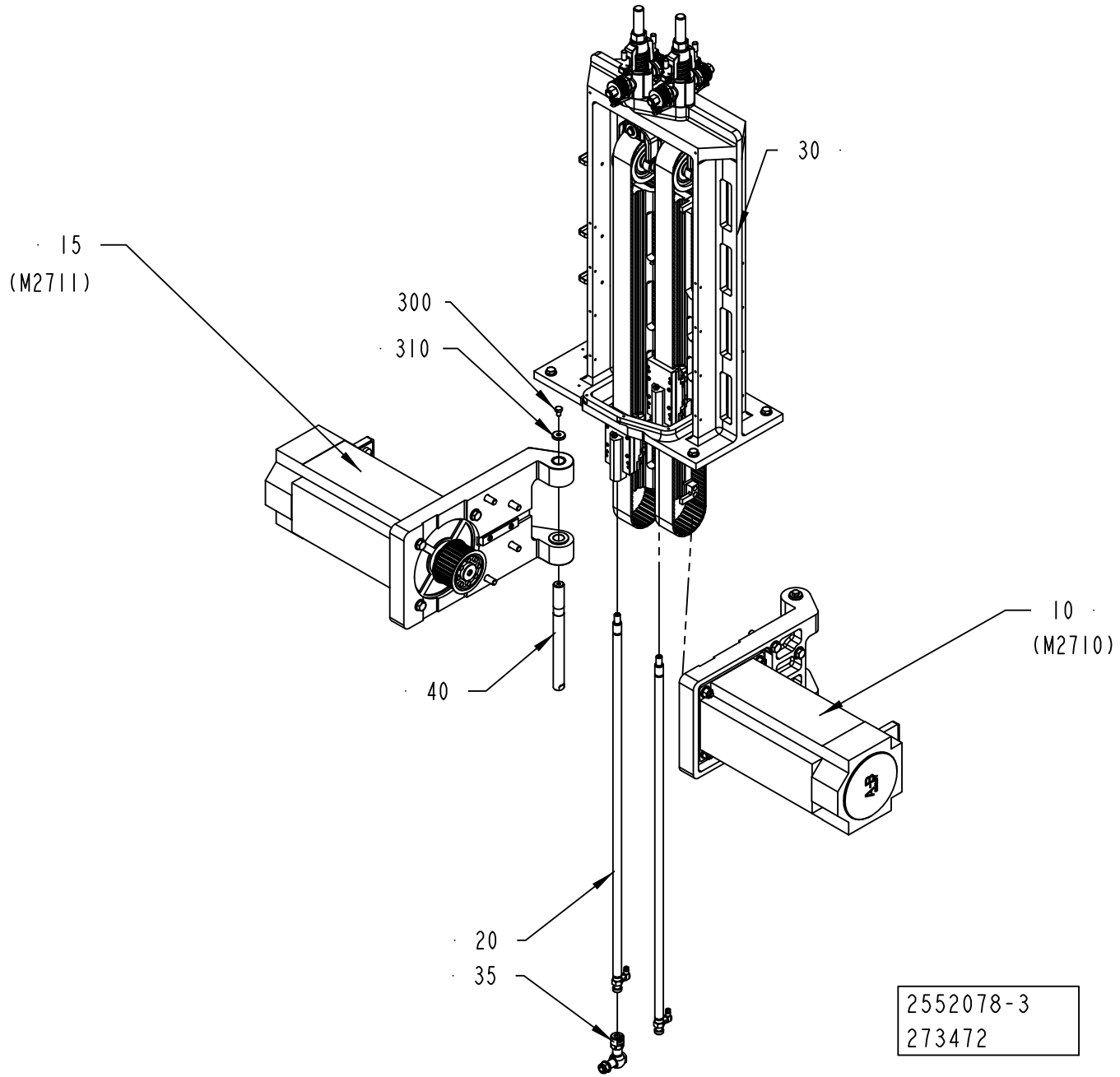
30
15
(M2711)
300
310
10
(M2710)
40
20
35
2552078-3
273472

ECM: 317534 - 20080101
Group number: 2552078-0250
Assembly Drawing: 2552078-3_1_AA

Pos	Part No	UN	Qty	Description	Page No
-					
010	2792661-0100		1	MOTOR UNIT	**3-7**
015	2792662-0100		1	MOTOR UNIT	**3-9**
020	2552080-0100		2	LINK	**3-11**
030	2552111-0200		1	SUPPORT	**3-31**
035	1490994-0100		1	LINK	**3-25**
040	2533638-0000		2	AXLE PIN	
300	312105-0447		2	SCREW M6S ISO 4017 M8X12 A480	
310	315125-0165		2	WASHER TBRSB 8,4X26X5 A4	

Pos	Part No	UN	Qty	Description	Page No

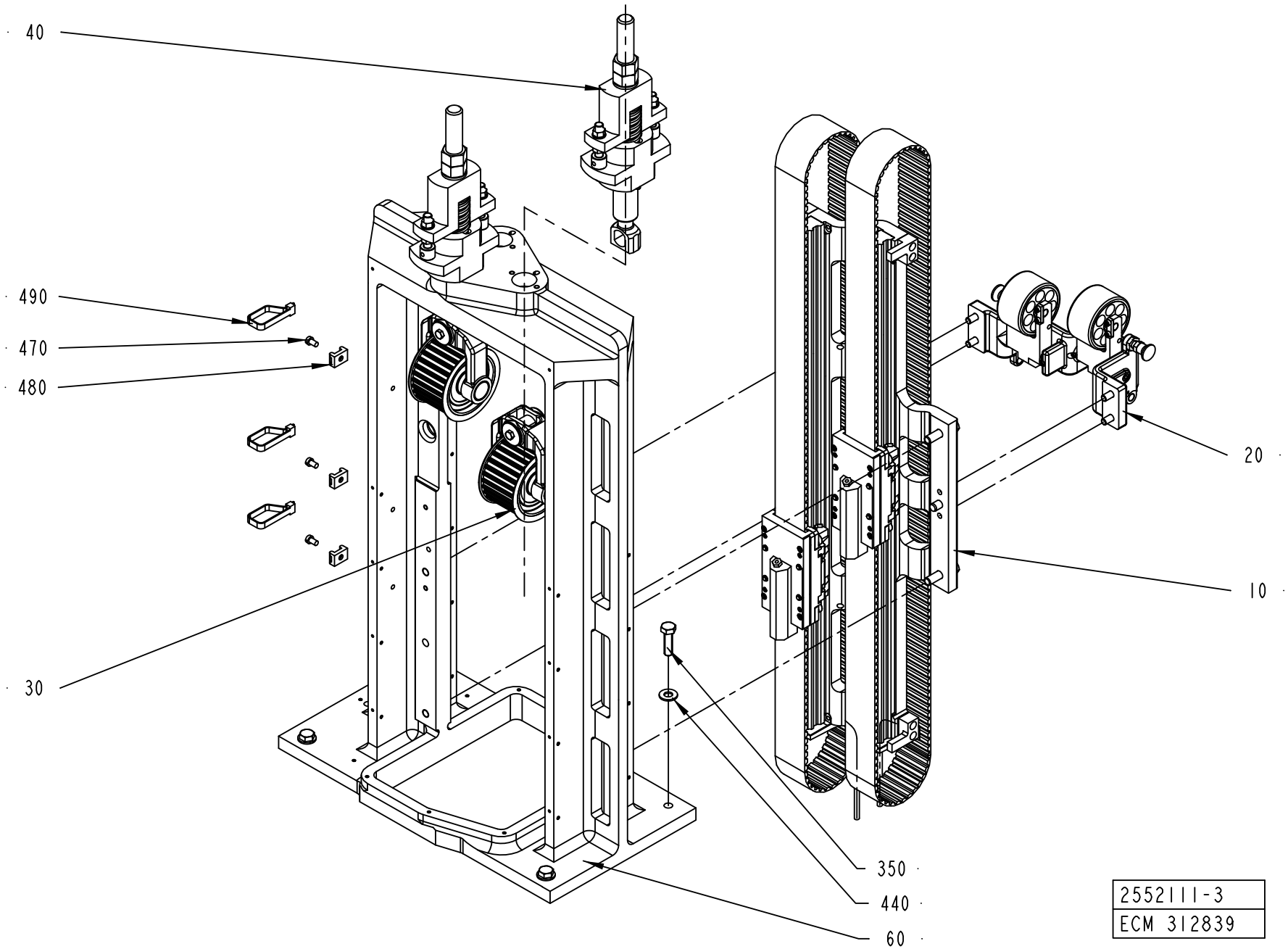
40
490
470
480
30
20
10
350
440
60
2552111-3
ECM 312839

ECM: 317532 - 20080101
Group number: 2552111-0200
Assembly Drawing: 2552111-3_1_AA

Pos	Part No	UN	Qty	Description	Page No
-					
010	1350218-0150		1	GUIDE	**3-33**
020	1487630-0100		1	DAMPER	**3-35**
030	2803072-0100		2	PULLEY	**3-21**
040	2872687-0100		2	BELT TENSIONER	**3-23**
060	1255222-0000		1	FRAME	
350	312105-0497		4	SCREW M6S ISO 4017 M10X35 A480	
440	315105-0173		4	WASHER BRB 10,5X22 RFR	
470	312125-0364		3	SCREW ISO 1207 M6X10 A4	
480	352113-0204		3	ANCHOR PLATES FOR STRIPS, TYPE TM3S25-M	
490	352113-0103		3	CABLE TIE, BLACK 290X7,6 MM	

Pos	Part No	UN	Qty	Description	Page No

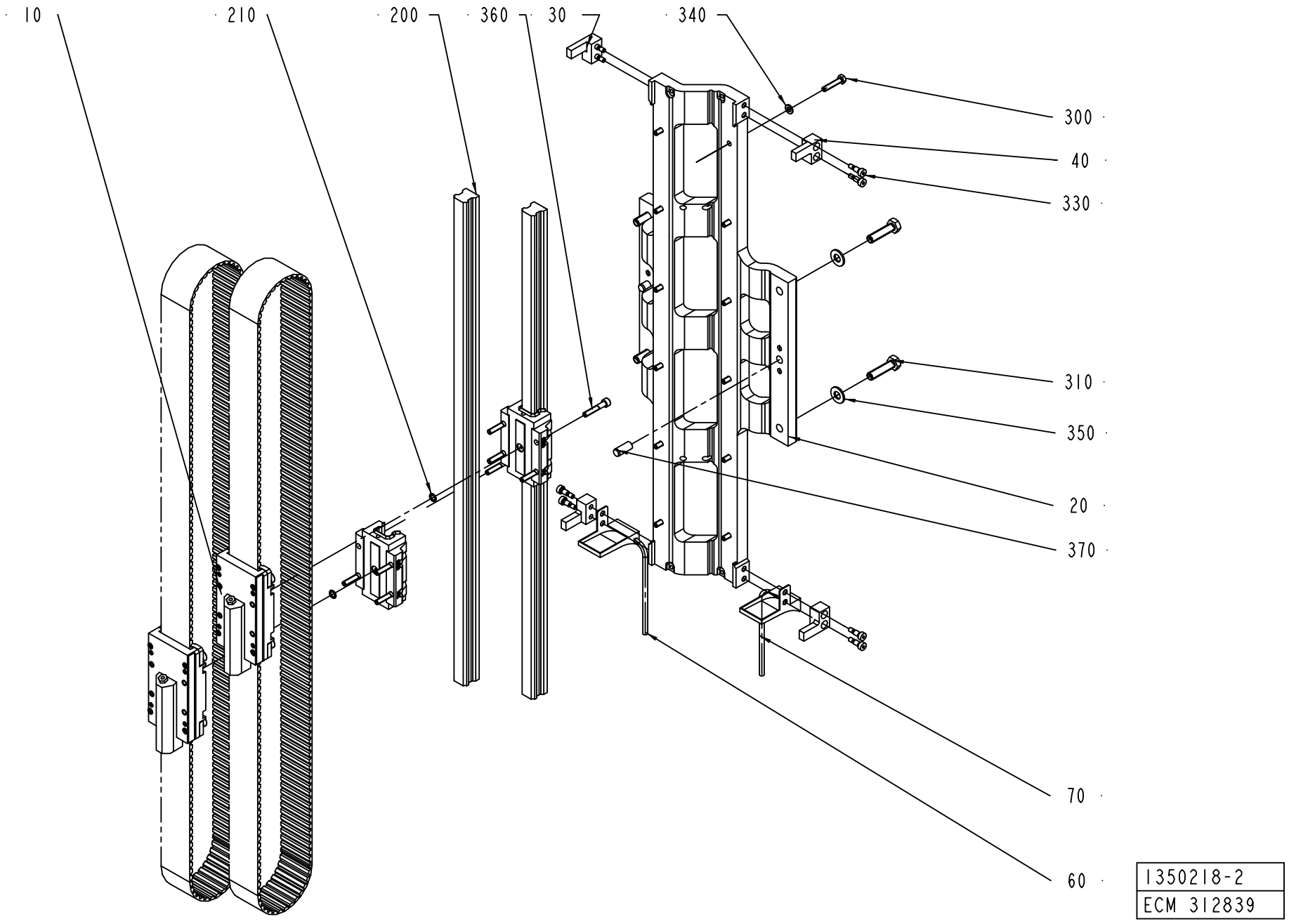
10
210
200
360
30
340
300
40
330
310
350
20
370
70
60
1350218-2
ECM 312839

ECM: 317530 - 20080101
Group number: 1350218-0150
Assembly Drawing: 1350218-2_1_AB

Pos	Part No	UN	Qty	Description	Page No
-					
010	1350210-0100		2	RUNNER	**3-17**
020	1255223-0000		1	HOLDER	
030	1350825-0000		2	LOCK	
040	1350826-0000		2	LOCK	
060	2894044-0000		1	DRIP PLATE	
070	2912332-0000		1	DRIP PLATE	
200	90458-2307		2	LINEAR UNIT HSR25	
210	90459-1411		2	O-RING 7,8X1,9 MM	
300	312109-0374		12	SCREW M6S ISO 4017 M6X30 A480	
310	312109-0499		4	SCREW M6S ISO 4017 M10X40 A480	
330	312180-0364		8	SCREW ISO7379 H6X10	
340	315105-0153		12	WASHER BRB 6,4X12 RFR	
350	315105-0173		4	WASHER BRB 10,5X22 RFR	
360	312115-0376		8	SCREW ISO4762 M6X35 A4 80	
370	311103-1456		2	PARALLEL PIN ISO 2338 10M6X24 A1	

Pos	Part No	UN	Qty	Description	Page No

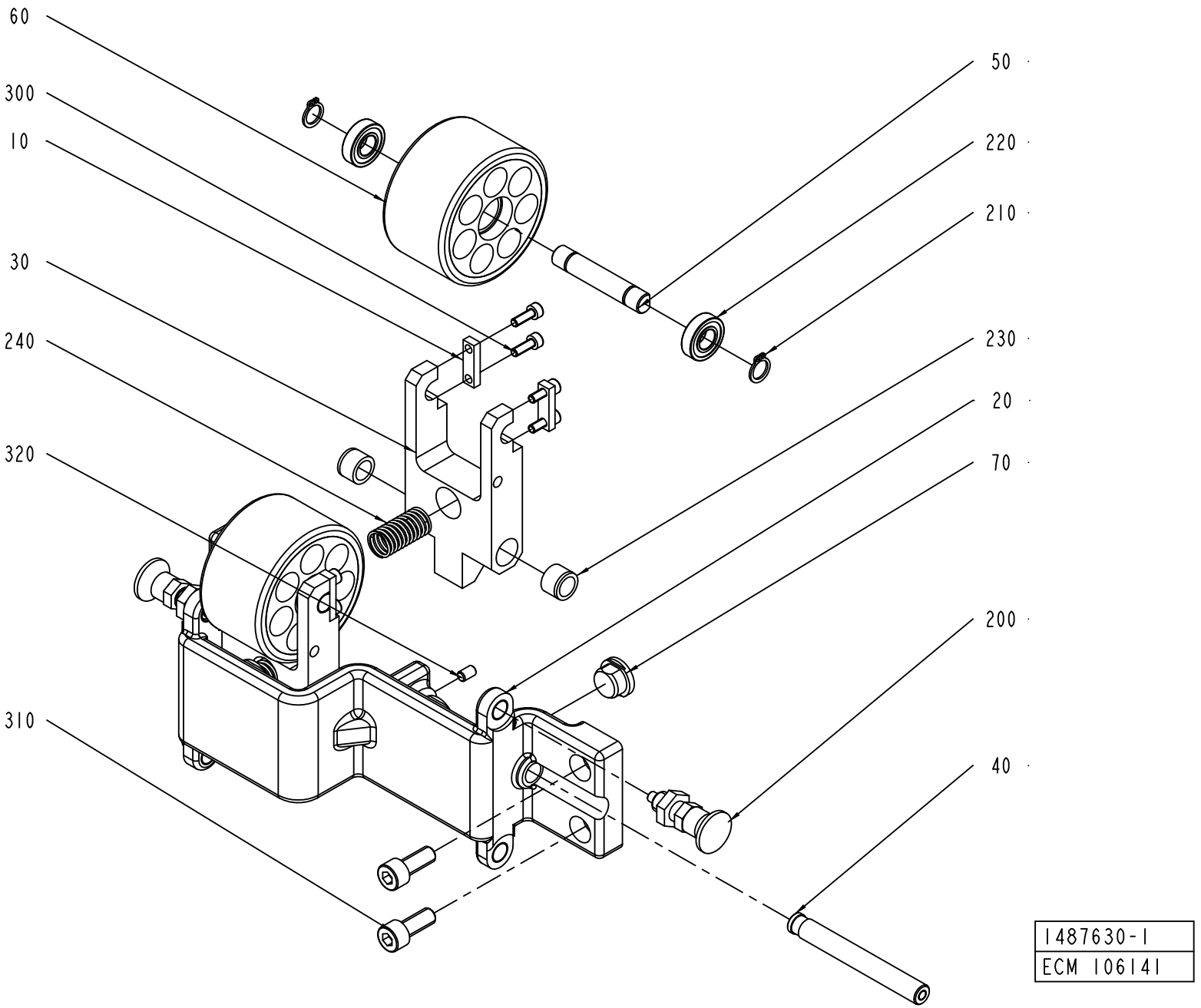
60
300
10
30
240
320
310
50
220
210
230
20
70
200
40
1487630-1
ECM 106141

ECM: 306204 - 20070701
Group number: 1487630-0100
Assembly Drawing: 1487630-1_1_AA

Pos	Part No	UN	Qty	Description	Page No
-					
010	1349266-0000		4	PLATE	
020	1487631-0000		1	BRACKET	
030	1487632-0000		2	FORK	
040	1487633-0000		2	AXLE PIN	
050	1487634-0000		2	AXLE PIN	
060	1487635-0000		2	WHEEL	
070	1487636-0000		2	STOPPER	
200	90051-0112		2	LOCK KNOB, NO. GN 617 NIK5	
210	90141-0016		4	RETAINING RING FOR SHAFT DIN 471 10 SS	
220	90214-0036		4	BALL BEARING, 10X22X6 MM	
230	90240-0119		4	BEAR. BUSHING WITHOUT FL	
240	90458-2305		2	COMP. SPRING D22280	
300	312115-0291		8	SCREW ISO4762 M4X12 A4 80	
310	312115-0451		4	SCREW ISO4762 M8X20 A4 80	
320	312318-0323		2	SCREW ISO4029 M5X8 A4	

Pos	Part No	UN	Qty	Description	Page No

Tetra Pak

SPC

Spare Parts Catalogue

Tetra Pak A3/Flex

648575-0150

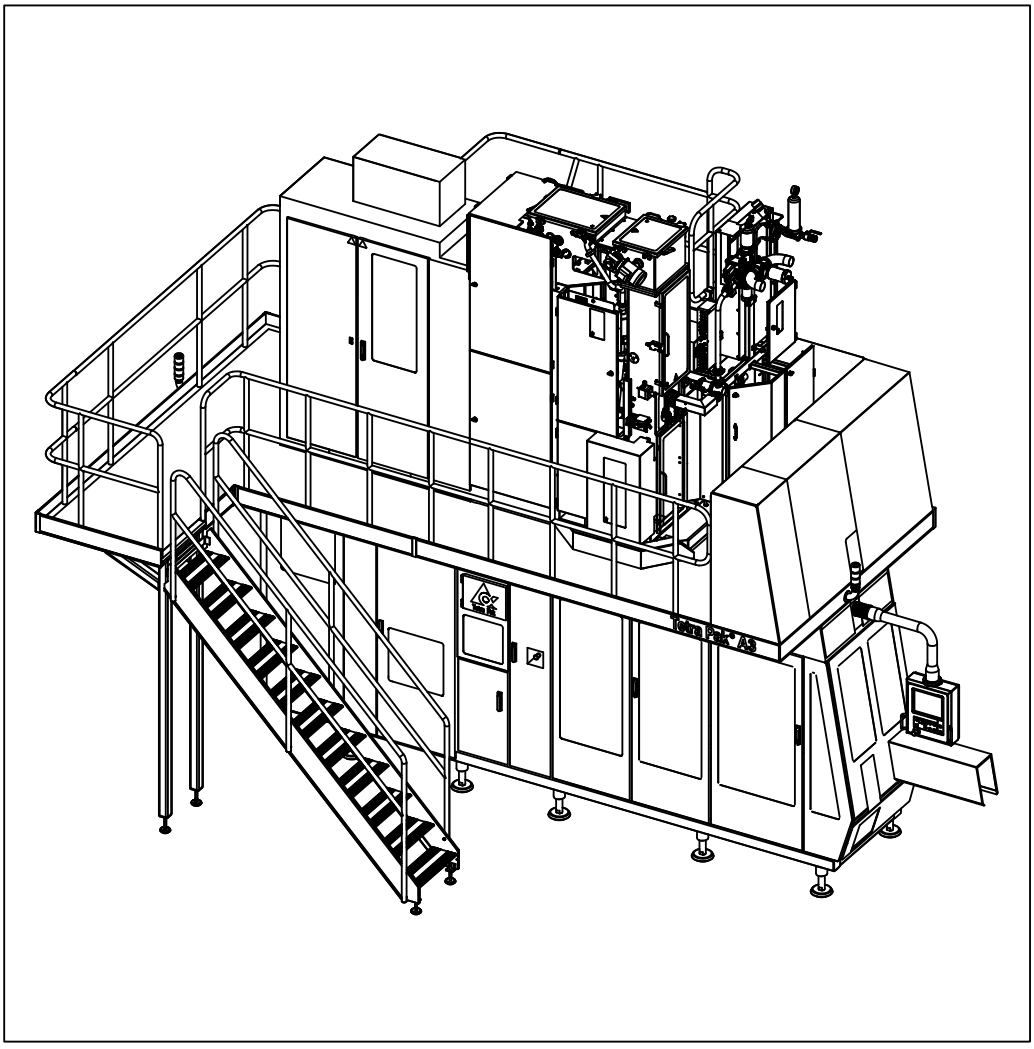

Tetra Pak

Doc. No: SPC-2851301-0117

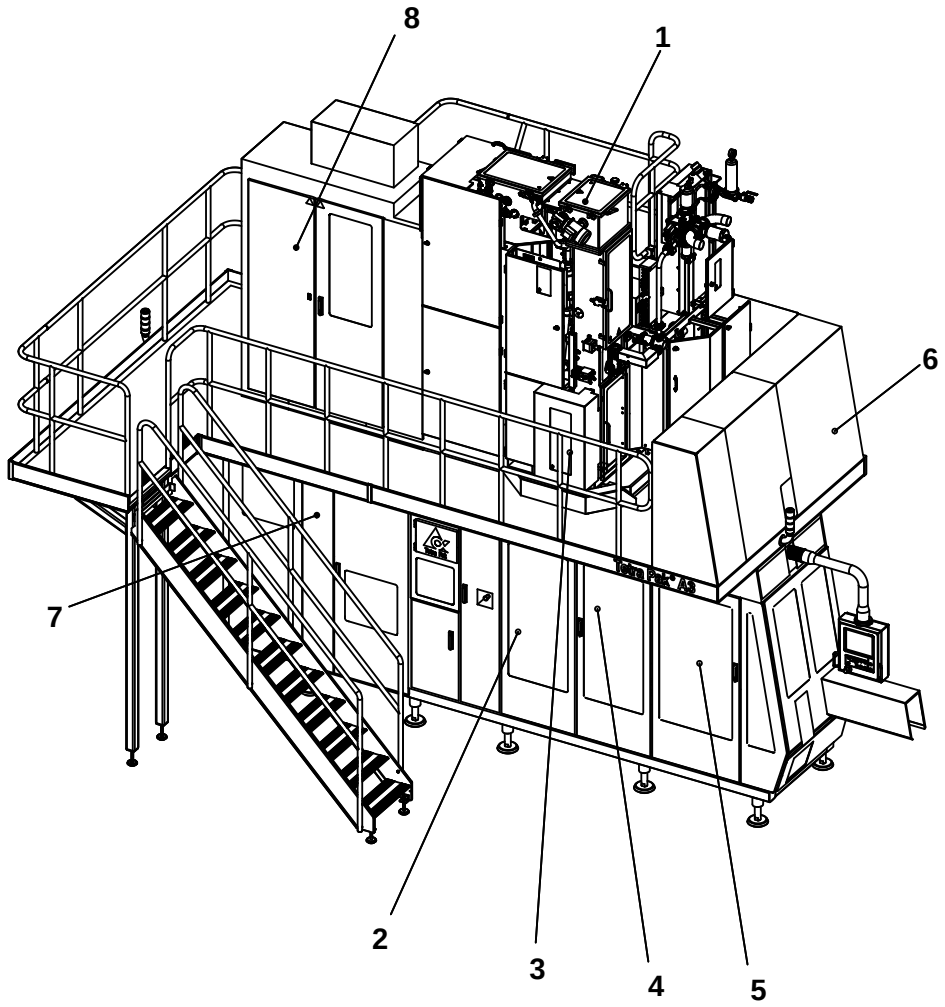

The position numbers in the illustration correspond with the chapter numbers listed on the next page.

Copyright © 2009 Tetra Pak Group

All rights reserved. No part of this document may be reproduced or copied in any form or by any means without written permission from Tetra Pak Packaging Solutions .

Tetra Pak and all Tetra Pak products are trademarks belonging to the Tetra Pak Group.

The content of this manual is in accordance with the design and construction of the machine or equipment at the time of publishing. Tetra Pak reserves the right to introduce design modifications without prior notice.

This document was produced by:

Tetra Pak Packaging Solutions
Via Delfini 1
411 00 Modena
ITALY

Additional copies can be ordered from Tetra Pak. When ordering additional copies, always provide the document number.

Doc. No. SPC-2851301-0117

Issue 2009-09

This document is valid from:

21211/00480

Series No/Machine No Sign.

SPC

Spare Parts Catalogue

Tetra Pak A3/Flex
648575-0150

BINDER 1
- i Introduction
- 1 Superstructure
- 2 Machine Body
- 3 Drive Unit

BINDER 2
- 4 Jaw System
- 5 Final Folder
- 6 Final Folder TGA
- 7 Service Unit

BINDER 3
- 8 Automatic Splicing Unit
- 9 Electrical Cabinet
- 10 Regular Accessories
- 11 Optional Accessories
- ii Part Number Index
- iii Ref. Des. Parts Index

Machine or equipment configurations that this catalogue is valid for are described on the next page.

Doc. No: SPC-2851301-0117

Issue 2009-09

Tetra Pak

Tetra Pak Packaging Solutions

Valid for:

Name	Drawing Specification and Development Step	Additional Information
Tetra Pak A3/Flex	648575-0150	-

SPC
Spare Parts Catalogue

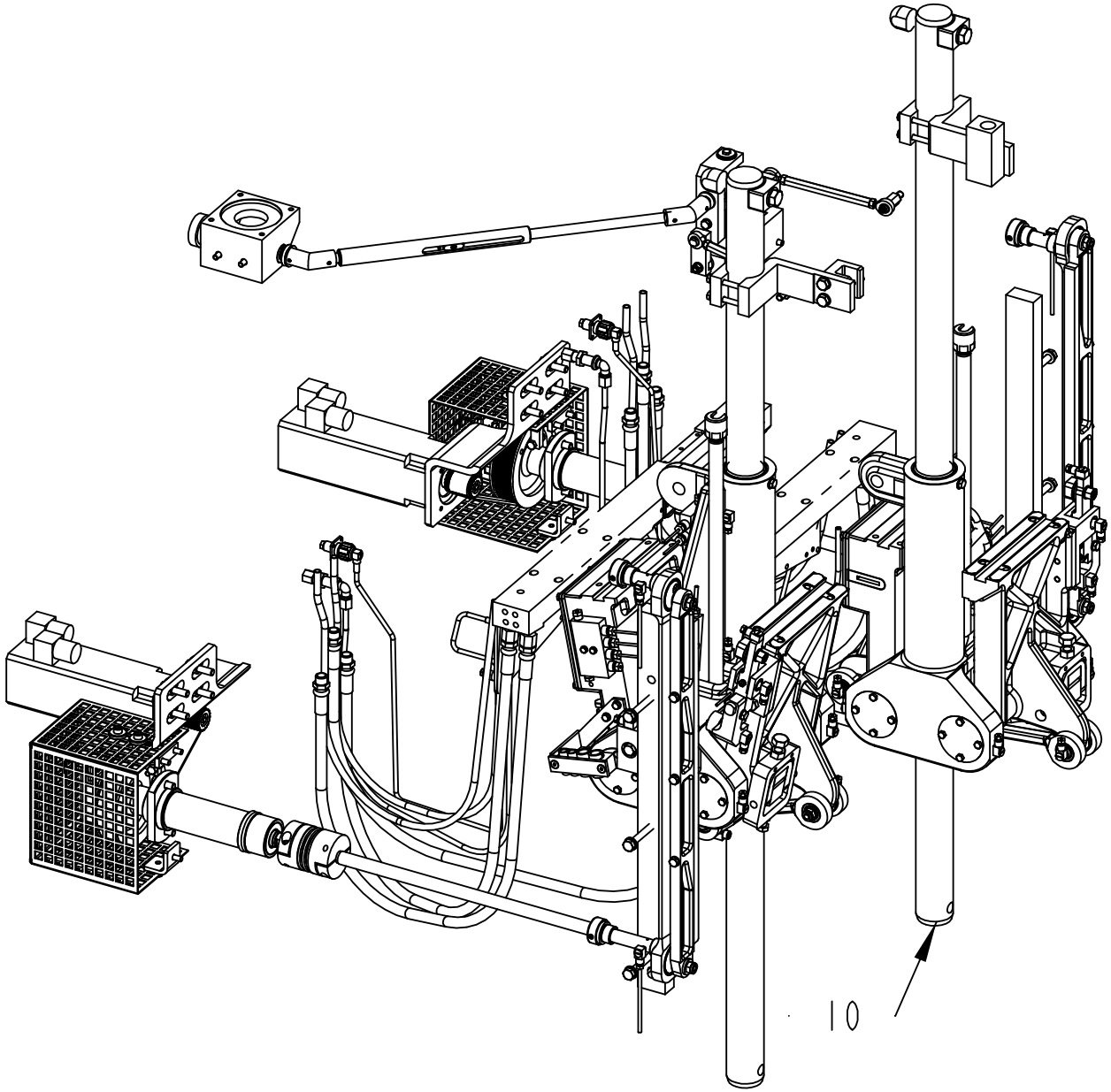

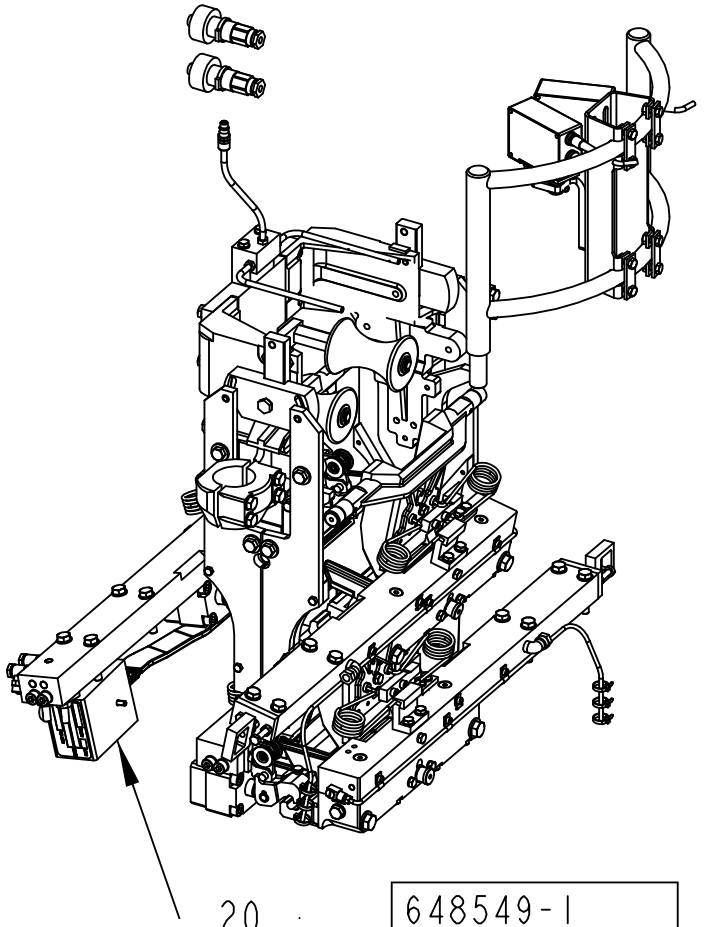

648549-1
ECM 120277

ECM: 307431 - 20070530
Group number: 648549-0350
Assembly Drawing: 648549-1_1_AA

Pos	Part No	UN	Qty	Description	Page No
A3/FLEX					
020	2552003-0100		1	FORMING UNIT	**4-5**
Common Parts					
010	2552002-0250		1	BASE UNIT	**4-257**

Pos	Part No	UN	Qty	Description	Page No

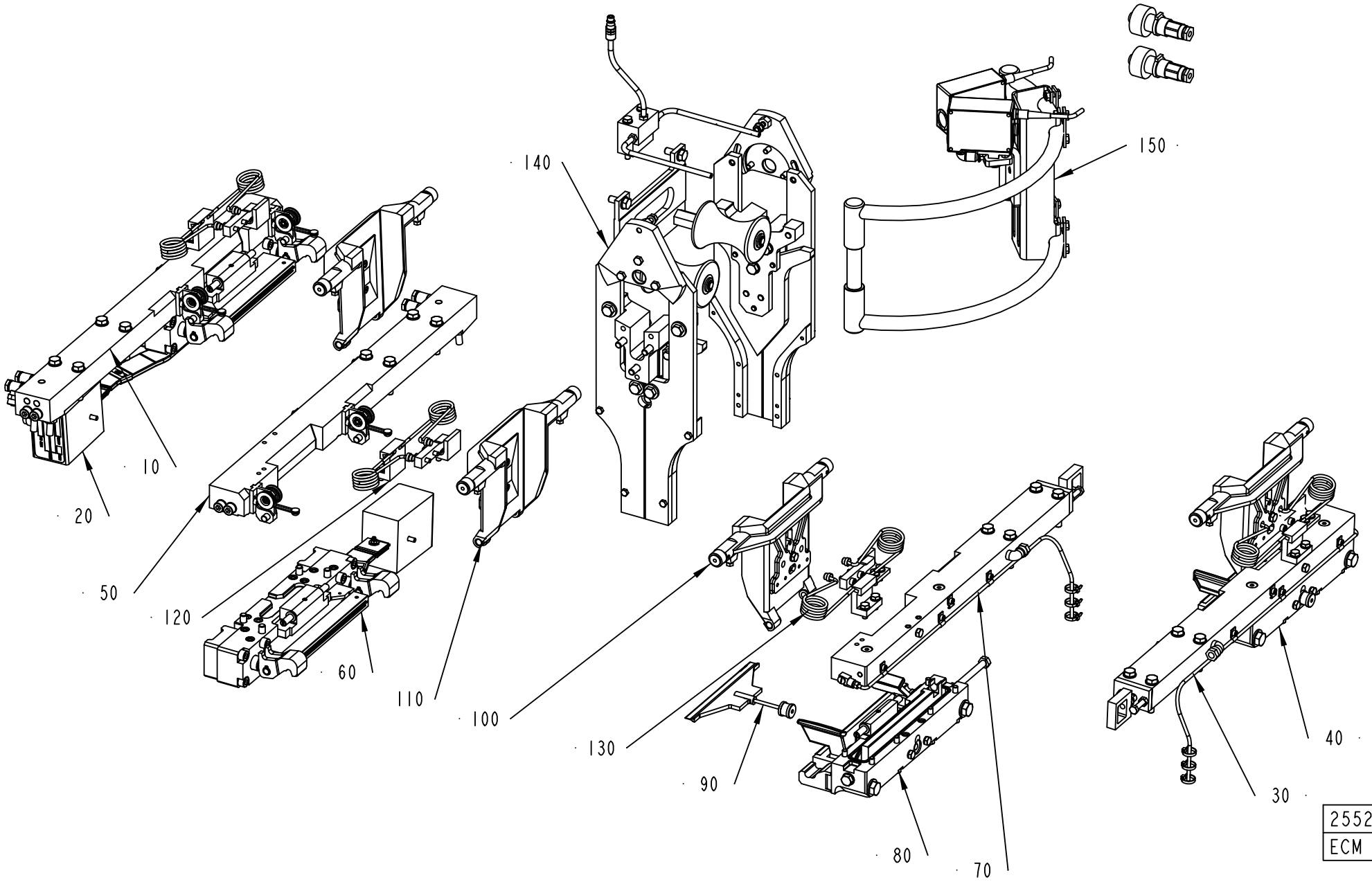
10
20
50
120
60
110
140
150
100
130
90
80
70
40
30
2552003-1
ECM 128689

ECM: 340726 - 20080215
Group number: 2552003-0100
Assembly Drawing: 2552003-1_1_AB

Pos	Part No	UN	Qty	Description	Page No
A3/FLEX NOQC					
100	1334633-0200		2	VOLUME FLAP CUTTING	**4-7, 4-9, 4-11, 4-13, 4-15**
110	1334634-0200		2	VOLUME FLAP PRESSURE	**4-17, 4-19, 4-21, 4-23, 4-25**
120	1334635-0200		2	SHOCK ABSORBER	**4-27, 4-29, 4-31, 4-33, 4-35, 4-37**
130	1334636-0200		2	SHOCK ABSORBER	**4-39, 4-41, 4-43, 4-45, 4-47, 4-49**
A3/FLEX TBA 0500B QC, A3/FLEX TBA 1000B QC, A3/FLEX TBA 0250B QC, A3/FLEX TBA 0200B QC, A3/FLEX TBA 0330S QC, A3/FLEX TBA 0200M QC, A3/FLEX TBA 0250S QC, A3/FLEX TPA 1000SQ QC, A3/FLEX TPA 0750SQ QC, A3/FLEX TPA 0200SQ QC, A3/FLEX TPA 0250SQ QC, A3/FLEX TBA 0250SQ QC, A3/FLEX TBA 0200SQ QC, A3/FLEX TBA 0500SQ QC, A3/FLEX TBA 1000SQ QC					
100	2594512-0200		2	VOLUME FLAP	**4-51, 4-53, 4-55, 4-57, 4-59, 4-61**
110	1548460-0200		2	VOLUME FLAP	**4-65, 4-67, 4-69, 4-71, 4-73, 4-75**
A3/FLEX TBA 1890S QC, A3/FLEX TBA 2000S QC, A3/FLEX TBA 1400B					
100	2597325-0100		2	VOLUME FLAP	**4-79**
110	2597324-0100		2	VOLUME FLAP	**4-87**
120	1334635-0200		2	SHOCK ABSORBER	**4-27, 4-29, 4-31, 4-33, 4-35, 4-37**
130	1334636-0200		2	SHOCK ABSORBER	**4-39, 4-41, 4-43, 4-45, 4-47, 4-49**
A3/FLEX TGA 0500SQ					
100	2922540-0100		1	VOLUME FLAP CUTTING RIGHT	**4-93**
105	2928232-0100		1	VOLUME FLAP CUTTING LEFT	**4-95**
110	2922539-0100		1	VOLUME FLAP PRESSURE RIGHT	**4-97**
115	2928233-0100		1	VOLUME FLAP PRESSURE LEFT	**4-99**
A3/FLEX TGA 1000SQ, A3/FLEX TGA 0750SQ					
100	2698638-0100		1	VOLUME FLAP CUTTING RIGHT	**4-101**
105	2928230-0100		1	VOLUME FLAP CUTTING LEFT	**4-105**
110	2698639-0100		1	VOLUME FLAP PRESSURE RIGHT	**4-107**
115	2928231-0100		1	VOLUME FLAP PRESSURE LEFT	**4-111**
Common Parts					
010	2514048-0200		1	CARRIER PRESSURE LEFT	**4-115, 4-117, 4-119, 4-121**
020	1512563-0200		1	PRESSURE JAW LEFT	**4-123, 4-125**
030	1512564-0200		1	CARRIER CUTTING LEFT	**4-143, 4-145, 4-147, 4-149, 4-151**
040	1512565-0300		1	CUTTING JAW LEFT	**4-153**
050	2514050-0200		1	CARRIER PRESSURE RIGHT	**4-175, 4-177, 4-179, 4-181**
060	1512568-0200		1	PRESSURE JAW RIGHT	**4-183, 4-185**
070	1512569-0200		1	CARRIER CUTTING RIGHT	**4-199, 4-201, 4-203, 4-205, 4-207**
080	1512570-0300		1	CUTTING JAW RIGHT	**4-209**
090	1478768-0200		2	KNIFE	**4-219**
140	2613647-0100		1	VOLUME CURVE PIECE	**4-221**
150	2616224-0200		1	PHOTOCELL UNIT	**4-249, 4-251, 4-253, 4-255**

Pos	Part No	UN	Qty	Description	Page No

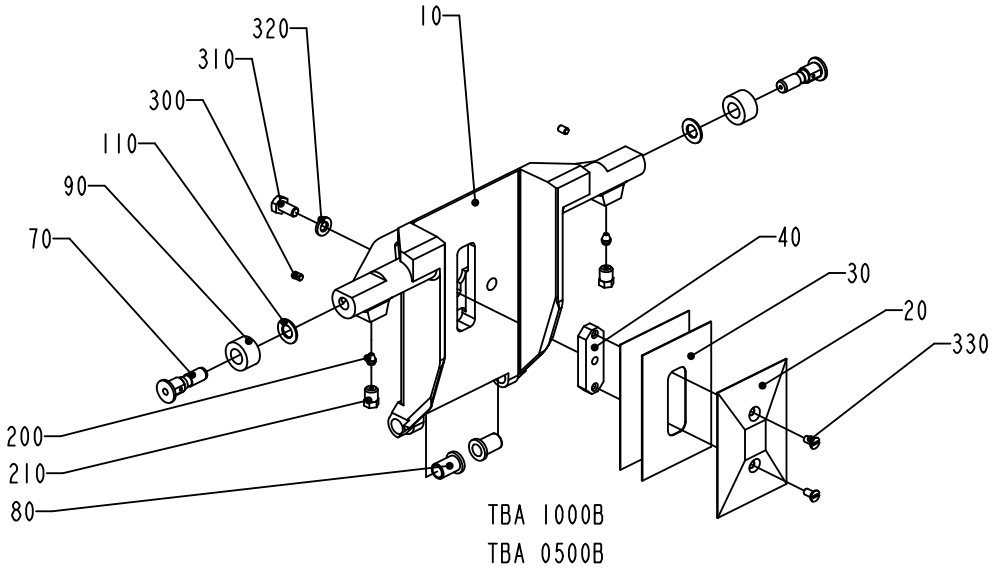

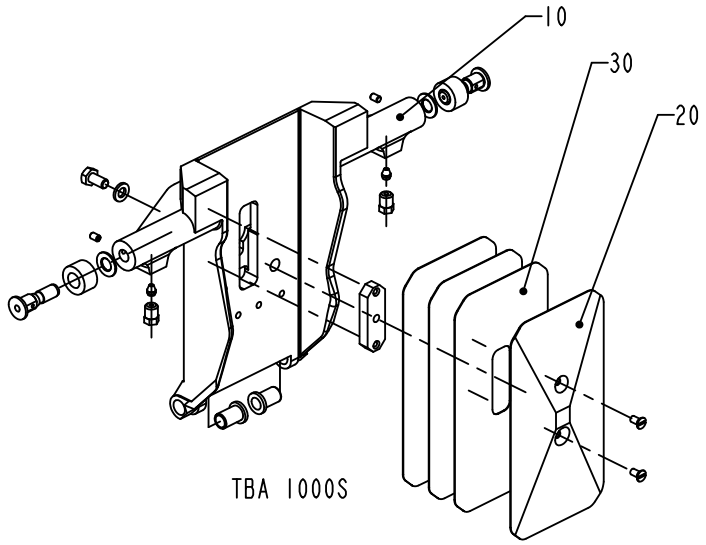

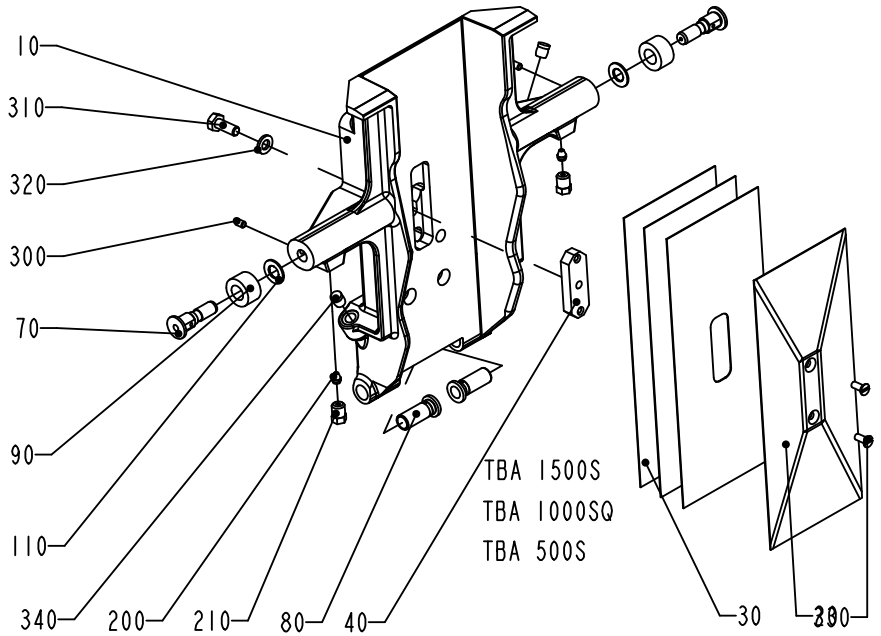

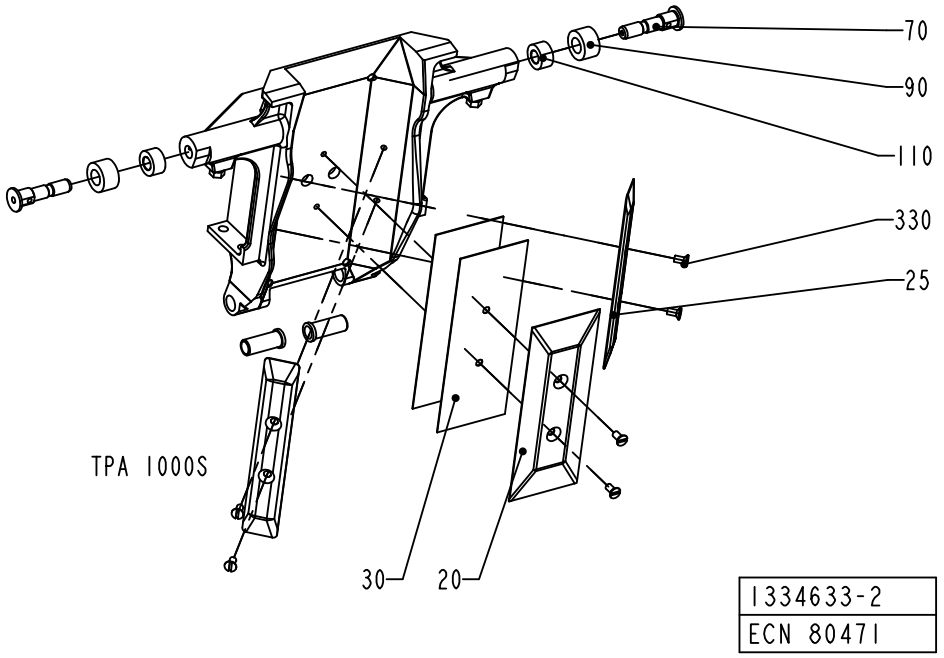

1334633-2
ECN 80471

ECM: 387844 - 20090403
Group number: 1334633-0200
Assembly Drawing: 1334633-2_1_AD

This list covers pages from 4-6 to 4-15

Pos	Part No	UN	Qty	Description	Page No
TBA 0200B (See drawing on page: 4-8)					
010	1499901-0000		1	VOLUME FLAP	
020	1038638-0000		1	VOLUME BULGE	
030	1038639-0000		2	VOLUME SHIM	
040	1038637-0000		1	WEDGE	
070	2993134-0000		2	AXLE PIN	
080	1255541-0000		2	BUSHING	
090	2993136-0000		2	ROLLER	
110	19972-0000		2	WASHER	
310	312105-0327		1	SCREW M6S ISO 4017 M5X12 A480	
320	315105-0146		1	WASHER BRB 5,3X10 RFR	
330	312145-0287		2	SCREW ISO 2009 MFS M4X8 A4	
TBA 0200S (See drawing on page: 4-8)					
010	1484866-0000		1	VOLUME FLAP	
020	1037733-0000		1	VOLUME BULGE	
030	1037735-0000		2	VOLUME SHIM	
040	1037734-0000		1	WEDGE	
070	2993134-0000		2	AXLE PIN	
080	1255541-0000		2	BUSHING	
090	2993136-0000		2	ROLLER	
110	19972-0000		2	WASHER	
310	312105-0327		1	SCREW M6S ISO 4017 M5X12 A480	
320	315105-0146		1	WASHER BRB 5,3X10 RFR	
330	312145-0287		2	SCREW ISO 2009 MFS M4X8 A4	
TBA 0250B (See drawing on page: 4-8)					
010	1484867-0000		1	VOLUME FLAP	
020	1346157-0000		1	VOLUME BULGE	
030	1346158-0000		2	VOLUME SHIM	
040	1037734-0000		1	WEDGE	
070	2993134-0000		2	AXLE PIN	
080	1255541-0000		2	BUSHING	
090	2993136-0000		2	ROLLER	
110	19972-0000		2	WASHER	
310	312105-0327		1	SCREW M6S ISO 4017 M5X12 A480	
320	315105-0146		1	WASHER BRB 5,3X10 RFR	
330	312145-0287		2	SCREW ISO 2009 MFS M4X8 A4	
TBA 0250S (See drawing on page: 4-8)					
010	2524388-0000		1	VOLUME FLAP	
020	2520473-0000		1	VOLUME BULGE	
030	2520474-0000		3	VOLUME SHIM	
040	1037734-0000		1	WEDGE	
070	2993134-0000		2	AXLE PIN	
080	1255541-0000		2	BUSHING	
090	2993136-0000		2	ROLLER	
110	19972-0000		2	WASHER	
310	312105-0328		1	SCREW M6S ISO 4017 M5X14 A480	
320	315105-0146		1	WASHER BRB 5,3X10 RFR	
330	312145-0287		2	SCREW ISO 2009 MFS M4X8 A4	
TBA 0330S (See drawing on page: 4-8)					
010	2544990-0000		1	VOLUME FLAP	
020	2544992-0000		1	VOLUME BULGE	
030	2544993-0000		3	VOLUME SHIM	
040	1037734-0000		1	WEDGE	
070	2993134-0000		2	AXLE PIN	
080	1255541-0000		2	BUSHING	
090	2993136-0000		2	ROLLER	
110	19972-0000		2	WASHER	
310	312105-0328		1	SCREW M6S ISO 4017 M5X14 A480	
320	315105-0146		1	WASHER BRB 5,3X10 RFR	
330	312145-0287		2	SCREW ISO 2009 MFS M4X8 A4	
TBA 0500B (See drawing on page: 4-6)					
010	1532287-0000		1	VOLUME FLAP	
020	1558817-0000		1	VOLUME BULGE	
030	1532293-0000		2	VOLUME SHIM	
070	2993134-0000		2	AXLE PIN	
080	1255541-0000		2	BUSHING	
090	2993136-0000		2	ROLLER	
110	19972-0000		2	WASHER	
310	312105-0327		1	SCREW M6S ISO 4017 M5X12 A480	
320	315105-0146		1	WASHER BRB 5,3X10 RFR	
TBA 0500S (See drawing on page: 4-6)					
010	1511250-0000		1	VOLUME FLAP	
020	1524035-0000		1	VOLUME BULGE	
030	1511253-0000		3	VOLUME SHIM	
040	1487628-0000		1	WEDGE	
070	2993134-0000		2	AXLE PIN	
080	1511254-0000		2	BUSHING	
090	2993135-0000		2	ROLLER	
110	19972-0000		2	WASHER	
310	312105-0368		1	SCREW M6S ISO 4017 M6X16 A480	
320	315105-0153		1	WASHER BRB 6,4X12 RFR	
330	312145-0289		2	SCREW ISO 2009 MFS M4X10 A4	
340	90261-0016		2	PLUG, BLIND, PLASTIC GPN300V2	
TBA 1000B (See drawing on page: 4-6)					

Machine Type | Group Description | Used-In | Group Number | Page No

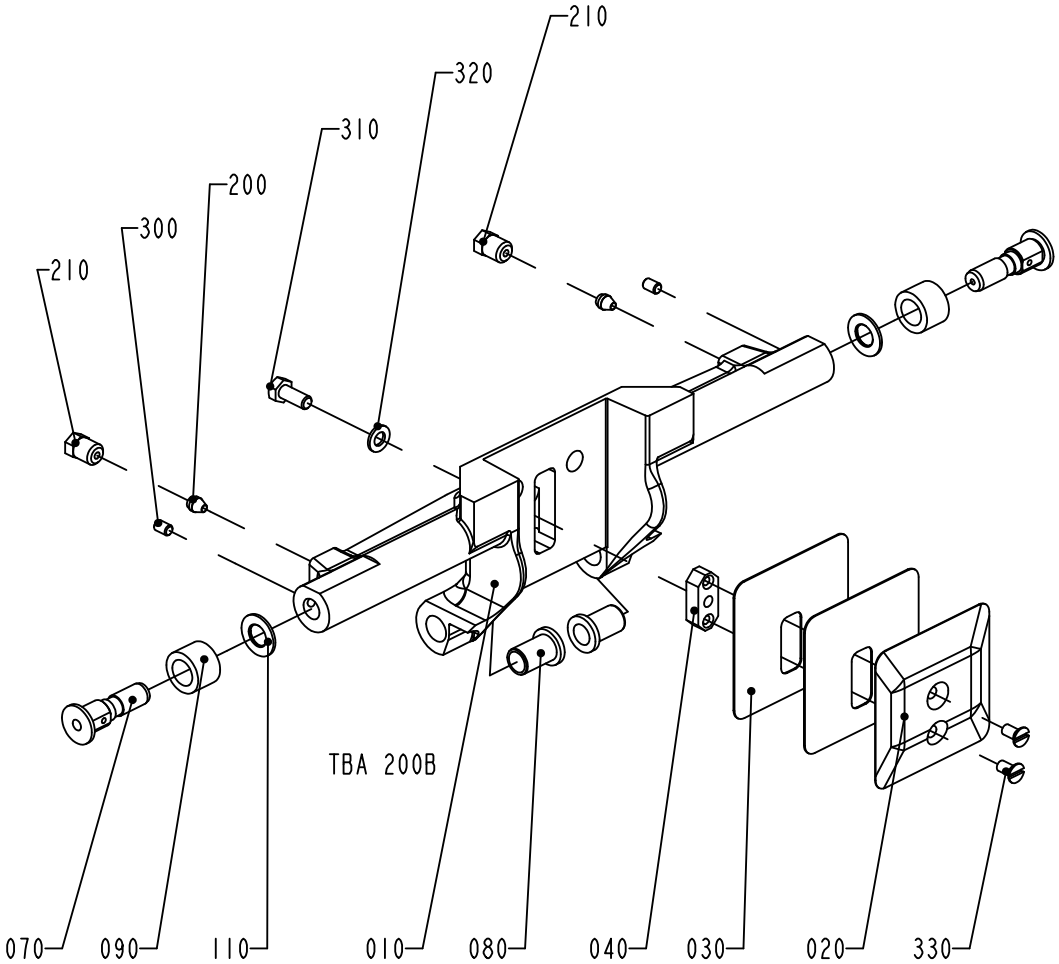

TBA 200B

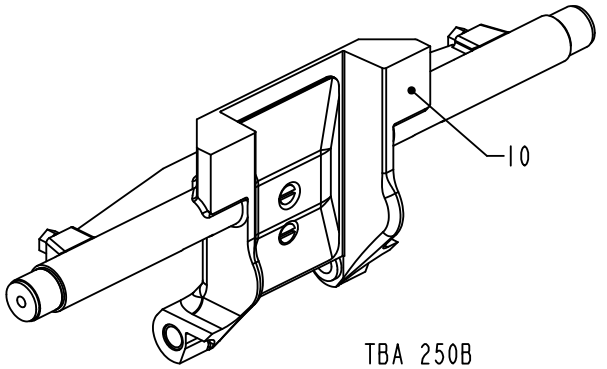

TBA 250B

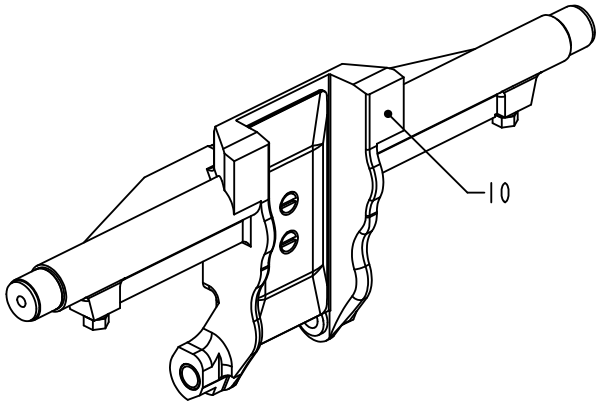

TBA 200S

1334633-3
ECN 72770

ECM: 387844 - 20090403
Group number: 1334633-0200
Assembly Drawing: 1334633-3_1_AB

This list covers pages from 4-6 to 4-15

Pos	Part No	UN	Qty	Description	Page No
TBA 1000B (Cont'd) (See drawing on page: 4-6)					
010	2982668-0000		1	VOLUME FLAP	
020	1035828-0000		1	VOLUME BULGE	
030	1035831-0000		3	VOLUME SHIM	
040	1040756-0000		1	WEDGE	
070	2993134-0000		2	AXLE PIN	
080	1255541-0000		2	BUSHING	
090	2993135-0000		2	ROLLER	
110	19972-0000		2	WASHER	
310	312105-0366		1	SCREW M6S ISO 4017 M6X12 A480	
320	315105-0153		1	WASHER BRB 6,4X12 RFR	
330	312145-0287		2	SCREW ISO 2009 MFS M4X8 A4	
TBA 1000S (See drawing on page: 4-6)					
010	2982665-0000		1	VOLUME FLAP	
020	1040754-0000		1	VOLUME BULGE	
030	1040755-0000		3	VOLUME SHIM	
040	1040756-0000		1	WEDGE	
070	2993134-0000		2	AXLE PIN	
080	1255541-0000		2	BUSHING	
090	2993135-0000		2	ROLLER	
110	19972-0000		2	WASHER	
310	312105-0366		1	SCREW M6S ISO 4017 M6X12 A480	
320	315105-0153		1	WASHER BRB 6,4X12 RFR	
330	312145-0287		2	SCREW ISO 2009 MFS M4X8 A4	
TBA 1000SQ (See drawing on page: 4-6)					
010	2606305-0000		1	VOLUME FLAP	
020	1487626-0000		1	VOLUME BULGE	
030	1487627-0000		3	VOLUME SHIM	
040	1040756-0000		1	WEDGE	
070	2993134-0000		2	AXLE PIN	
080	1558701-0000		2	BUSHING	
090	2993135-0000		2	ROLLER	
110	19972-0000		2	WASHER	
310	312115-0367		1	SCREW ISO4762 M6X14 A4 80	
320	315105-0153		1	WASHER BRB 6,4X12 RFR	
330	312145-0291		2	SCREW ISO 2009 MFS M4X12 A4	
TBA 1500S (See drawing on page: 4-6)					
010	2587236-0000		1	VOLUME FLAP	
020	1499675-0000		1	VOLUME BULGE	
030	1349208-0000		3	VOLUME SHIM	
040	1040756-0000		1	WEDGE	
070	2993134-0000		2	AXLE PIN	
080	1558701-0000		2	BUSHING	
090	2993135-0000		2	ROLLER	
110	19972-0000		2	WASHER	
310	312105-0368		1	SCREW M6S ISO 4017 M6X16 A480	
320	315105-0153		1	WASHER BRB 6,4X12 RFR	
330	312145-0289		2	SCREW ISO 2009 MFS M4X10 A4	
340	90261-0016		2	PLUG, BLIND, PLASTIC GPN300V2	
TPA 0250SQ (See drawing on page: 4-12)					
010	2530256-0000		1	VOLUME FLAP	
020	2581994-0000		2	VOLUME BULGE	
030	1549594-0000		6	VOLUME SHIM	
070	2993134-0000		2	AXLE PIN	
080	1255541-0000		2	BUSHING	
090	2993136-0000		2	ROLLER	
110	19972-0000		2	WASHER	
320	315105-0146		2	WASHER BRB 5,3X10 RFR	
325	312705-0314		2	NUT HEX. DOMED CAP MHM-6 M5 A280	
TPA 0330SQ (See drawing on page: 4-10)					
010	1539904-0000		1	VOLUME FLAP	
020	1539903-0000		2	VOLUME BULGE	
030	1539902-0000		6	VOLUME SHIM	
070	2993134-0000		2	AXLE PIN	
080	1255541-0000		2	BUSHING	
090	2993136-0000		2	ROLLER	
110	19972-0000		2	WASHER	
320	315105-0146		2	WASHER BRB 5,3X10 RFR	
325	312105-0327		2	SCREW M6S ISO 4017 M5X12 A480	
TPA 0500SQ (See drawing on page: 4-14)					
010	1549836-0000		1	VOLUME FLAP	
025	1549829-0000		2	VOLUME BULGE	
035	1549830-0000		6	VOLUME SHIM	
040	1549831-0000		2	WEDGE	
050	1549832-0000		1	PLUG	
070	2993134-0000		2	AXLE PIN	
080	2530313-0000		2	BUSHING	
090	2993135-0000		2	ROLLER	
110	19972-0000		2	WASHER	
310	312105-0327		3	SCREW M6S ISO 4017 M5X12 A480	
320	315105-0146		3	WASHER BRB 5,3X10 RFR	
370	312155-0289		4	SCREW DIN 7991 MF6S M4X10 A4 70	
TPA 1000SQ (See drawing on page: 4-14)					
010	2547011-0000		1	VOLUME FLAP	

Machine Type | Group Description | Used-In | Group Number | Page No

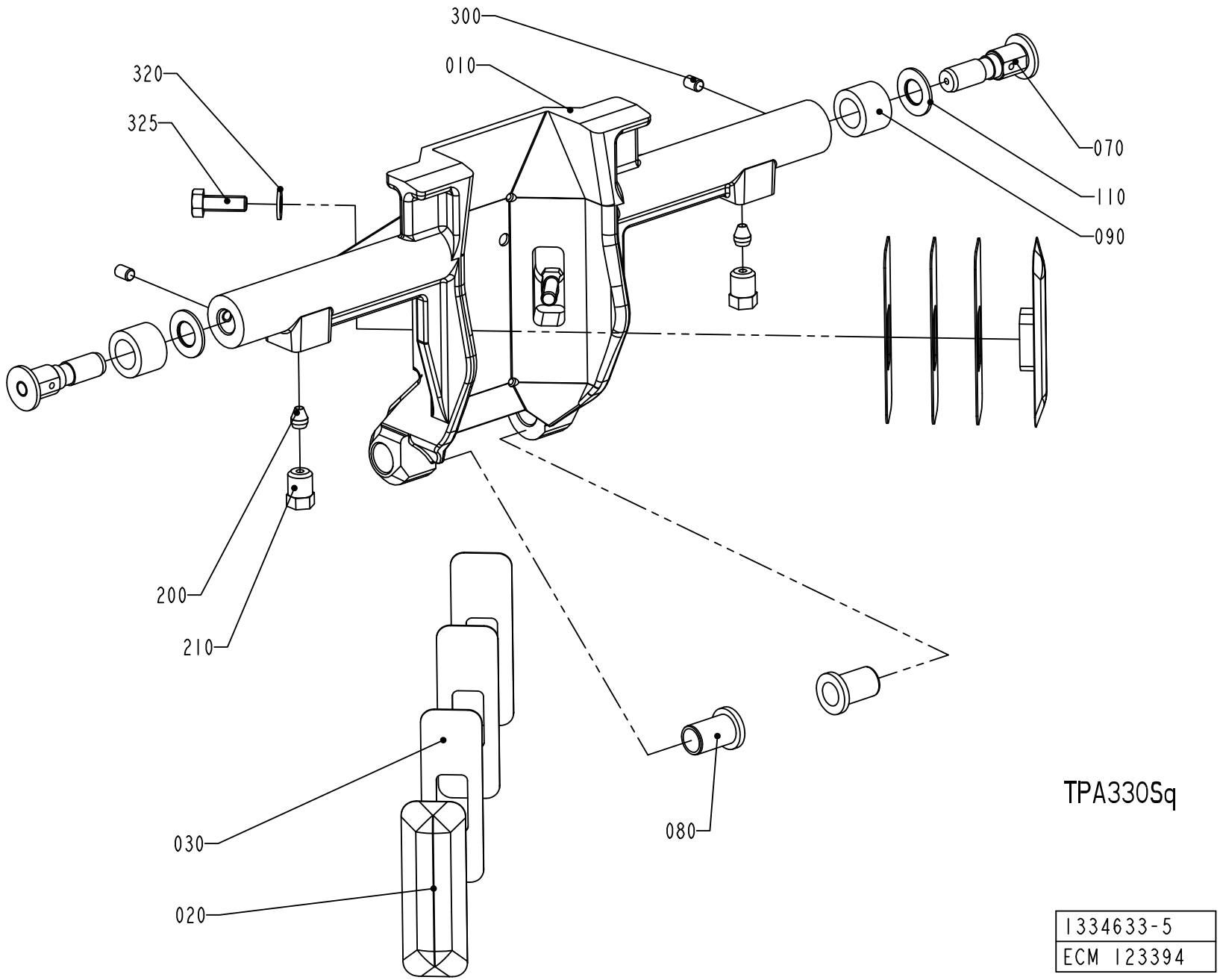
300
010
320
325
070
110
090
200
210
080
030
020
TPA330Sq
1334633-5
ECM 123394

ECM: 387844 - 20090403
Group number: 1334633-0200
Assembly Drawing: 1334633-5_1_AB

This list covers pages from 4-6 to 4-15

Pos	Part No	UN	Qty	Description	Page No
TPA 1000SQ (Cont'd) (See drawing on page: 4-14)					
020	1539840-0000		1	VOLUME BULGE	
025	1539841-0000		2	VOLUME BULGE	
030	1539842-0000		3	VOLUME SHIM	
035	1539843-0000		6	VOLUME SHIM	
040	1040756-0000		3	WEDGE	
060	2547010-0000		1	BRACKET	
070	2993134-0000		2	AXLE PIN	
080	1255541-0000		2	BUSHING	
090	2993135-0000		2	ROLLER	
110	19972-0000		2	WASHER	
320	315105-0153		3	WASHER BRB 6,4X12 RFR	
360	312105-0368		3	SCREW M6S ISO 4017 M6X16 A480	
370	312155-0289		6	SCREW DIN 7991 MF6S M4X10 A4 70	
Common Parts					
200	90028-0020		2	CONE TUBE 2,5MM	
210	90134-0063		2	BUSHING/NUT M8X1, D=2,5 MM	
300	312318-0285		2	SCREW ISO4029 M4X6 A4	

Pos	Part No	UN	Qty	Description	Page No

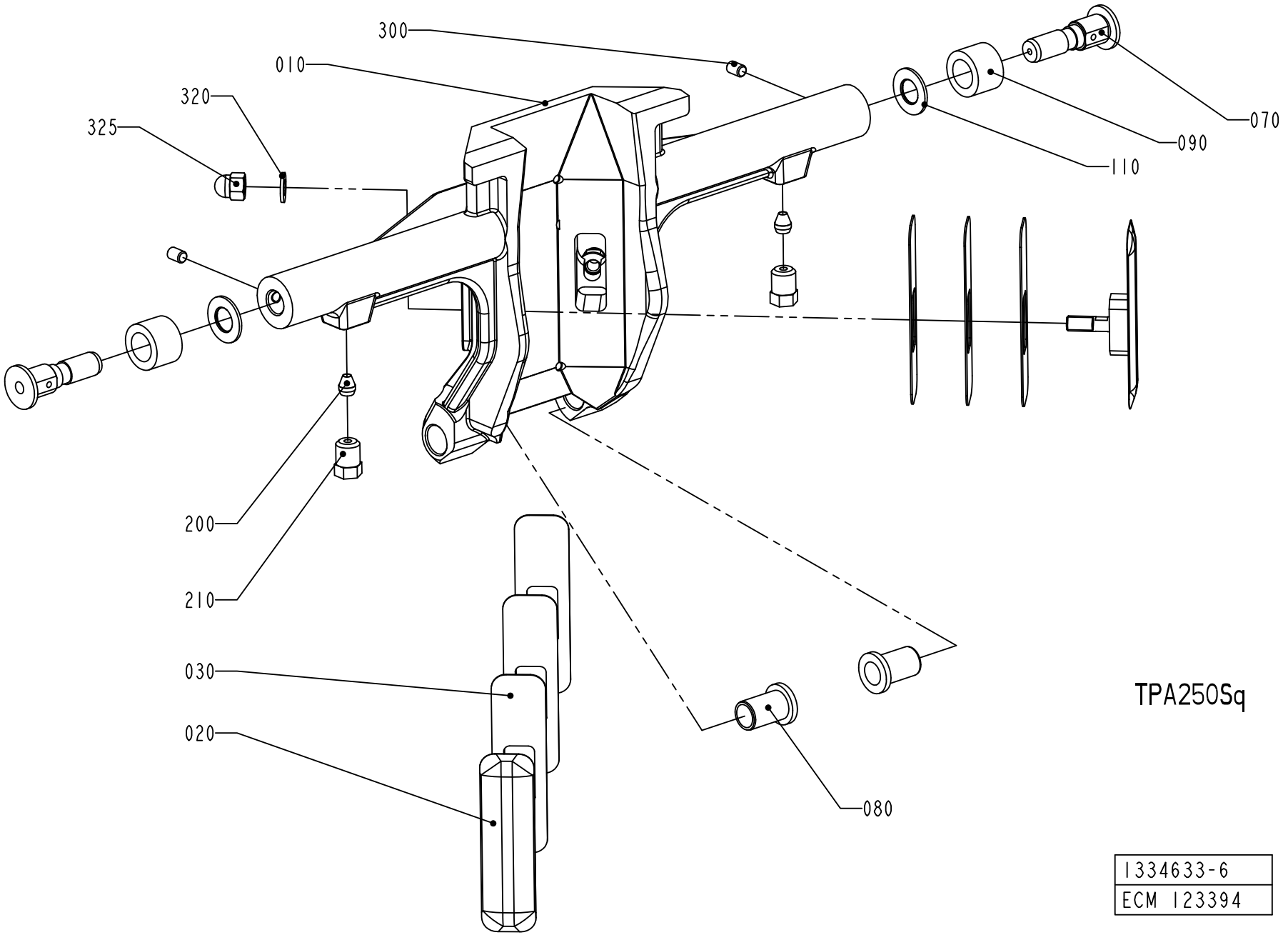
300
010
320
325
070
090
110
200
210
030
020
080
TPA250Sq
1334633-6
ECM 123394

ECM: 387844 - 20090403
Group number: 1334633-0200
Assembly Drawing: 1334633-6_1_AA

This list covers pages from 4-6 to 4-15

Pos	Part No	UN	Qty	Description	Page No
SEE PREVIOUS LISTS PAGES: 4-7, 4-9, 4-11.					

Pos	Part No	UN	Qty	Description	Page No

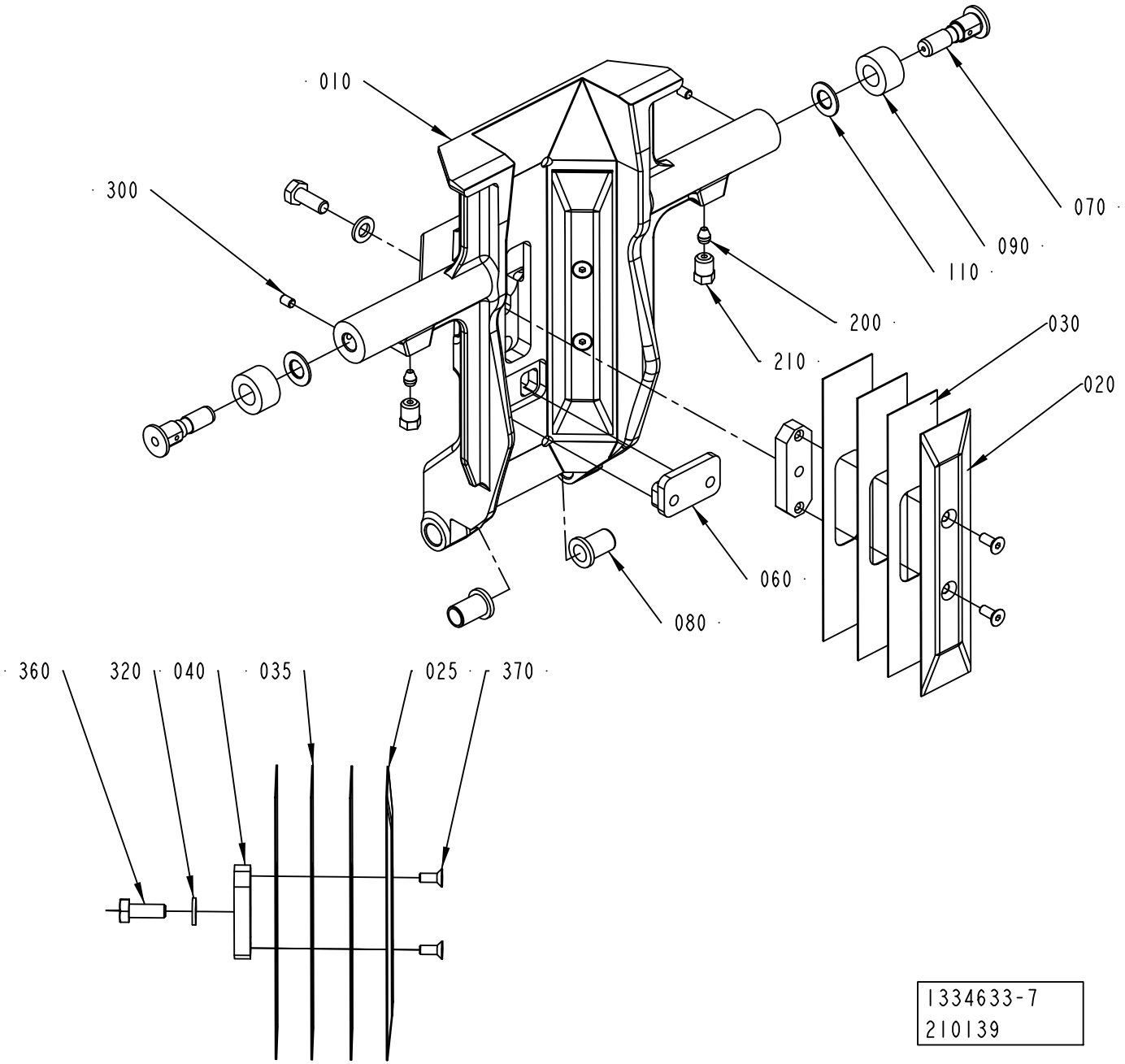
010
300
070
090
110
200
210
030
020
060
080
360
320
040
035
025
370
1334633-7
210139

ECM: 387844 - 20090403
Group number: 1334633-0200
Assembly Drawing: 1334633-7_1_AB

This list covers pages from 4-6 to 4-15

Pos	Part No	UN	Qty	Description	Page No
SEE PREVIOUS LISTS PAGES: 4-7, 4-9, 4-11.					

Pos	Part No	UN	Qty	Description	Page No

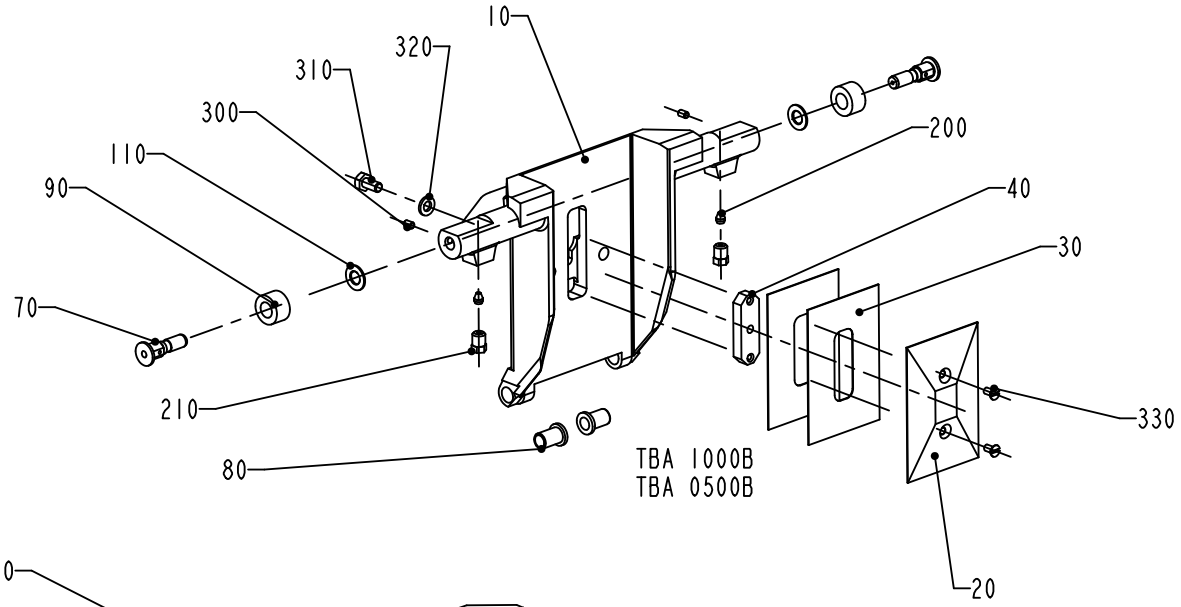

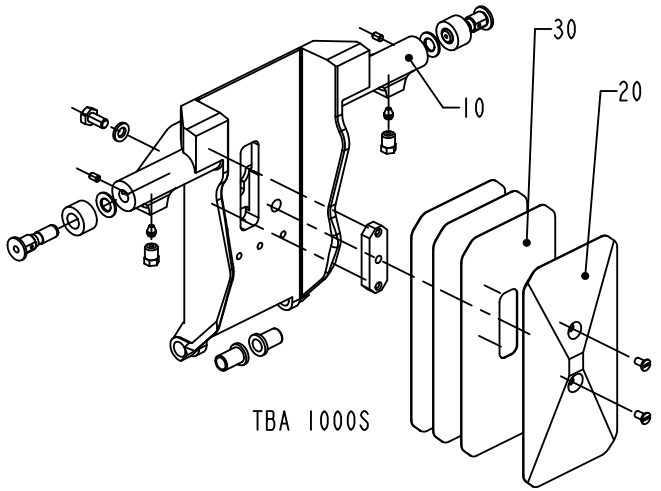

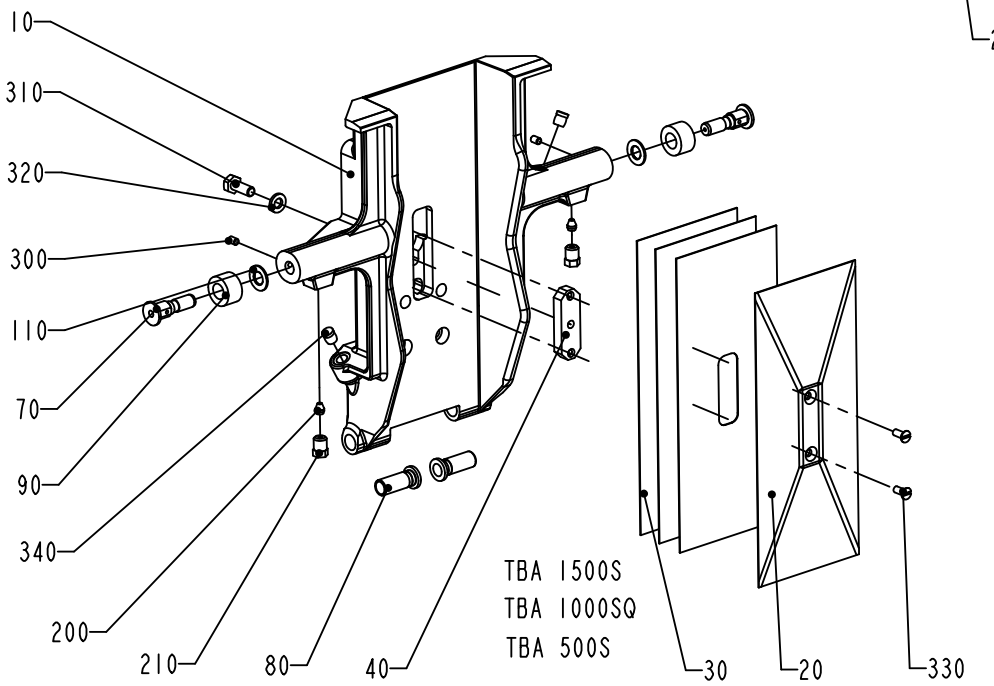

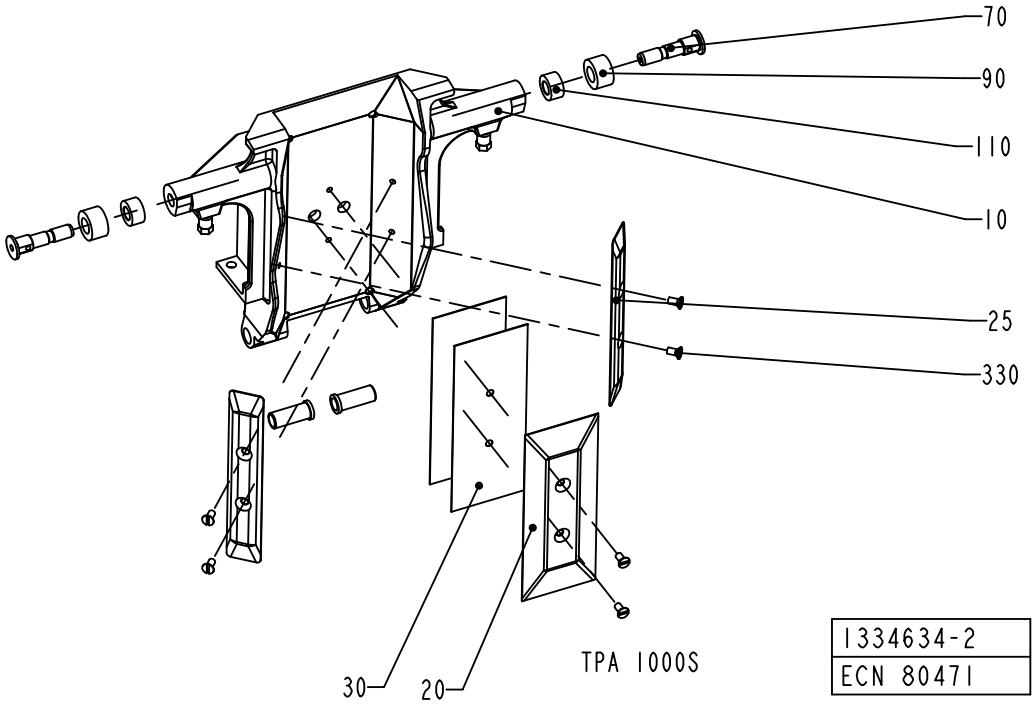

1334634-2
ECN 80471

ECM: 387843 - 20090403
Group number: 1334634-0200
Assembly Drawing: 1334634-2_1_AD

This list covers pages from 4-16 to 4-25

Pos	Part No	UN	Qty	Description	Page No
TPA 1000SQ SMILE (See drawing on page: 4-24)					
010	2582002-0000		1	VOLUME FLAP	
020	1539840-0000		1	VOLUME BULGE	
025	1539841-0000		2	VOLUME BULGE	
030	1539842-0000		3	VOLUME SHIM	
035	1539843-0000		6	VOLUME SHIM	
040	1040756-0000		3	WEDGE	
060	2547010-0000		1	BRACKET	
070	2993134-0000		2	AXLE PIN	
080	1255541-0000		2	BUSHING	
090	2993135-0000		2	ROLLER	
110	19972-0000		2	WASHER	
310	312105-0368		3	SCREW M6S ISO 4017 M6X16 A480	
320	315105-0153		3	WASHER BRB 6,4X12 RFR	
370	312155-0289		6	SCREW DIN 7991 MF6S M4X10 A4 70	
TBA 0200B (See drawing on page: 4-18)					
010	1499902-0000		1	VOLUME FLAP	
020	1038638-0000		1	VOLUME BULGE	
030	1038639-0000		2	VOLUME SHIM	
040	1038637-0000		1	WEDGE	
070	2993134-0000		2	AXLE PIN	
080	1255541-0000		2	BUSHING	
090	2993136-0000		2	ROLLER	
110	19972-0000		2	WASHER	
310	312105-0327		1	SCREW M6S ISO 4017 M5X12 A480	
320	315105-0146		1	WASHER BRB 5,3X10 RFR	
330	312145-0287		2	SCREW ISO 2009 MFS M4X8 A4	
TBA 0200S (See drawing on page: 4-18)					
010	1484865-0000		1	VOLUME FLAP	
020	1037733-0000		1	VOLUME BULGE	
030	1037735-0000		2	VOLUME SHIM	
040	1037734-0000		1	WEDGE	
070	2993134-0000		2	AXLE PIN	
080	1255541-0000		2	BUSHING	
090	2993136-0000		2	ROLLER	
110	19972-0000		2	WASHER	
310	312105-0327		1	SCREW M6S ISO 4017 M5X12 A480	
320	315105-0146		1	WASHER BRB 5,3X10 RFR	
330	312145-0287		2	SCREW ISO 2009 MFS M4X8 A4	
TBA 0250B (See drawing on page: 4-18)					
010	1484868-0000		1	VOLUME FLAP	
020	1346157-0000		1	VOLUME BULGE	
030	1346158-0000		2	VOLUME SHIM	
040	1037734-0000		1	WEDGE	
070	2993134-0000		2	AXLE PIN	
080	1255541-0000		2	BUSHING	
090	2993136-0000		2	ROLLER	
110	19972-0000		2	WASHER	
310	312105-0327		1	SCREW M6S ISO 4017 M5X12 A480	
320	315105-0146		1	WASHER BRB 5,3X10 RFR	
330	312145-0287		2	SCREW ISO 2009 MFS M4X8 A4	
TBA 0250S (See drawing on page: 4-18)					
010	2520472-0000		1	VOLUME FLAP	
020	2520473-0000		1	VOLUME BULGE	
030	2520474-0000		3	VOLUME SHIM	
040	1037734-0000		1	WEDGE	
070	2993134-0000		2	AXLE PIN	
080	1255541-0000		2	BUSHING	
090	2993136-0000		2	ROLLER	
110	19972-0000		2	WASHER	
310	312105-0328		1	SCREW M6S ISO 4017 M5X14 A480	
320	315105-0146		1	WASHER BRB 5,3X10 RFR	
330	312145-0287		2	SCREW ISO 2009 MFS M4X8 A4	
TBA 0330S (See drawing on page: 4-18)					
010	2544991-0000		1	VOLUME FLAP	
020	2544992-0000		1	VOLUME BULGE	
030	2544993-0000		3	VOLUME SHIM	
040	1037734-0000		1	WEDGE	
070	2993134-0000		2	AXLE PIN	
080	1255541-0000		2	BUSHING	
090	2993136-0000		2	ROLLER	
110	19972-0000		2	WASHER	
310	312105-0328		1	SCREW M6S ISO 4017 M5X14 A480	
320	315105-0146		1	WASHER BRB 5,3X10 RFR	
330	312145-0287		2	SCREW ISO 2009 MFS M4X8 A4	
TBA 0500B (See drawing on page: 4-16)					
010	1532287-0000		1	VOLUME FLAP	
020	1558817-0000		1	VOLUME BULGE	
030	1532293-0000		2	VOLUME SHIM	
070	2993134-0000		2	AXLE PIN	
080	1255541-0000		2	BUSHING	
090	2993136-0000		2	ROLLER	
110	19972-0000		2	WASHER	
310	312105-0327		1	SCREW M6S ISO 4017 M5X12 A480	

VOLUME FLAP PRESSURE

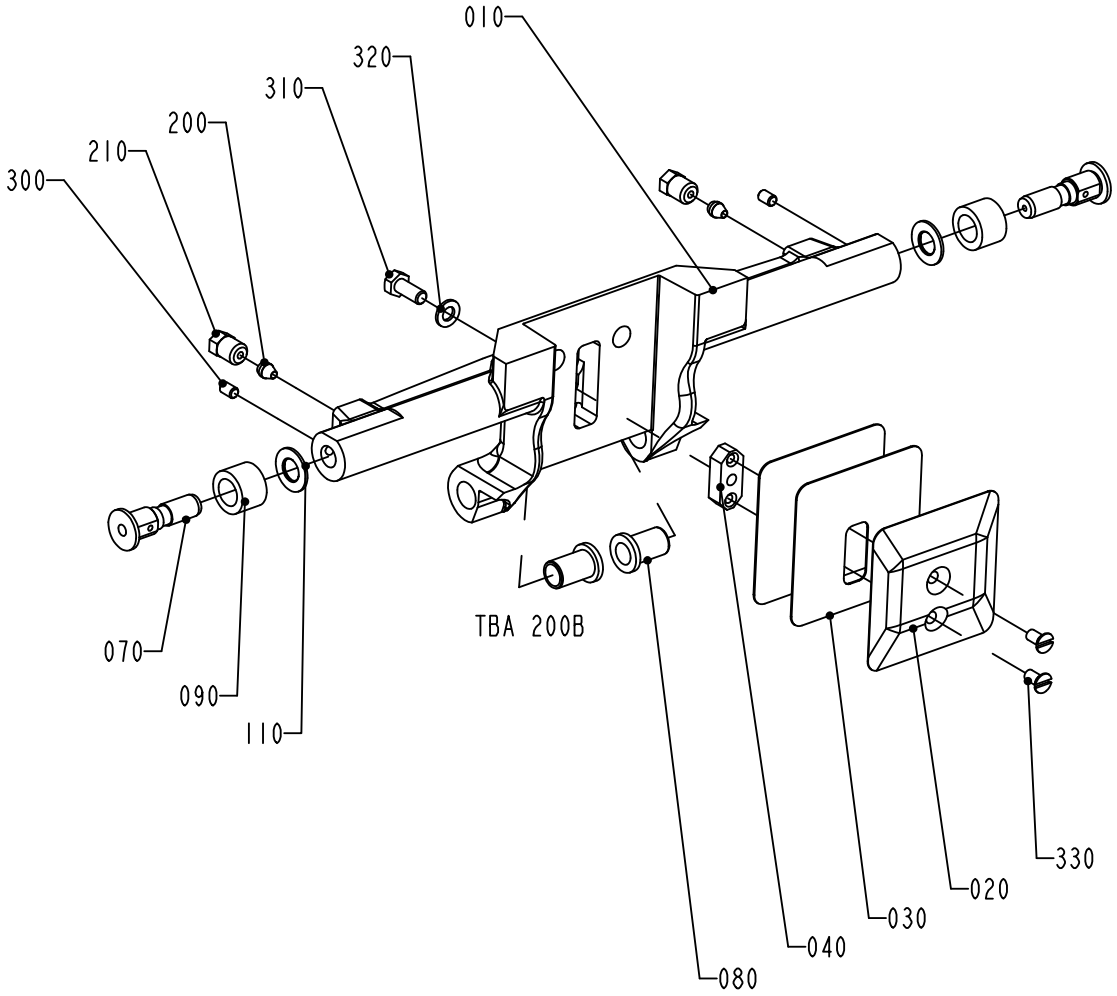

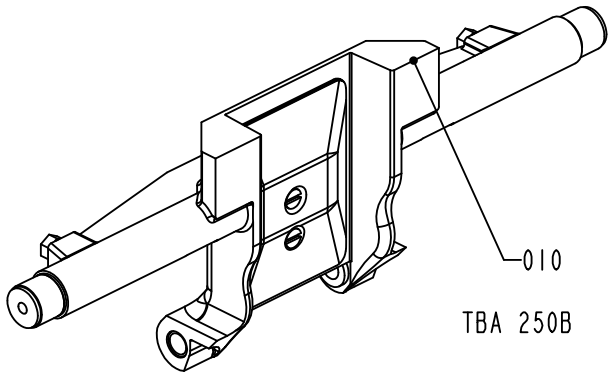

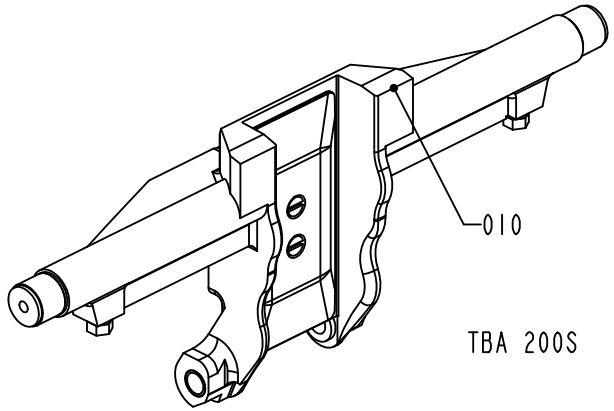

1334634-3
ECN 72770

ECM: 387843 - 20090403
Group number: 1334634-0200
Assembly Drawing: 1334634-3_1_AB

This list covers pages from 4-16 to 4-25

Pos	Part No	UN	Qty	Description	Page No
TBA 0500B (Cont'd) (See drawing on page: 4-16)					
320	315105-0146		1	WASHER BRB 5,3X10 RFR	
TBA 0500S (See drawing on page: 4-16)					
010	1511251-0000		1	VOLUME FLAP	
020	1524035-0000		1	VOLUME BULGE	
030	1511253-0000		3	VOLUME SHIM	
040	1487628-0000		1	WEDGE	
070	2993134-0000		2	AXLE PIN	
080	1511254-0000		2	BUSHING	
090	2993135-0000		2	ROLLER	
110	19972-0000		2	WASHER	
310	312105-0368		1	SCREW M6S ISO 4017 M6X16 A480	
320	315105-0153		1	WASHER BRB 6,4X12 RFR	
330	312145-0291		2	SCREW ISO 2009 MFS M4X12 A4	
340	90261-0016		2	PLUG, BLIND, PLASTIC GPN300V2	
TBA 1000B (See drawing on page: 4-16)					
010	2982668-0000		1	VOLUME FLAP	
020	1035828-0000		1	VOLUME BULGE	
030	1035831-0000		3	VOLUME SHIM	
040	1040756-0000		1	WEDGE	
070	2993134-0000		2	AXLE PIN	
080	1255541-0000		2	BUSHING	
090	2993135-0000		2	ROLLER	
110	19972-0000		2	WASHER	
310	312105-0366		1	SCREW M6S ISO 4017 M6X12 A480	
320	315105-0153		1	WASHER BRB 6,4X12 RFR	
330	312145-0287		2	SCREW ISO 2009 MFS M4X8 A4	
TBA 1000S (See drawing on page: 4-16)					
010	2982665-0000		1	VOLUME FLAP	
020	1040754-0000		1	VOLUME BULGE	
030	1040755-0000		3	VOLUME SHIM	
040	1040756-0000		1	WEDGE	
070	2993134-0000		2	AXLE PIN	
080	1255541-0000		2	BUSHING	
090	2993135-0000		2	ROLLER	
110	19972-0000		2	WASHER	
310	312105-0366		1	SCREW M6S ISO 4017 M6X12 A480	
320	315105-0153		1	WASHER BRB 6,4X12 RFR	
330	312145-0287		2	SCREW ISO 2009 MFS M4X8 A4	
TBA 1000SQ (See drawing on page: 4-16)					
010	2606306-0000		1	VOLUME FLAP	
020	1487626-0000		1	VOLUME BULGE	
030	1487627-0000		3	VOLUME SHIM	
040	1040756-0000		1	WEDGE	
070	2993134-0000		2	AXLE PIN	
080	1558701-0000		2	BUSHING	
090	2993135-0000		2	ROLLER	
110	19972-0000		2	WASHER	
310	312115-0367		1	SCREW ISO4762 M6X14 A4 80	
320	315105-0153		1	WASHER BRB 6,4X12 RFR	
330	312145-0291		2	SCREW ISO 2009 MFS M4X12 A4	
TBA 1500S (See drawing on page: 4-16)					
010	2587235-0000		1	VOLUME FLAP	
020	1499675-0000		1	VOLUME BULGE	
030	1349208-0000		3	VOLUME SHIM	
040	1040756-0000		1	WEDGE	
070	2993134-0000		2	AXLE PIN	
080	1558701-0000		2	BUSHING	
090	2993135-0000		2	ROLLER	
110	19972-0000		2	WASHER	
310	312105-0368		1	SCREW M6S ISO 4017 M6X16 A480	
320	315105-0153		1	WASHER BRB 6,4X12 RFR	
330	312145-0289		2	SCREW ISO 2009 MFS M4X10 A4	
340	90261-0016		2	PLUG, BLIND, PLASTIC GPN300V2	
TPA 0250SQ (See drawing on page: 4-22)					
010	2530257-0000		1	VOLUME FLAP	
020	2581994-0000		2	VOLUME BULGE	
030	1549594-0000		6	VOLUME SHIM	
070	2993134-0000		2	AXLE PIN	
080	1255541-0000		2	BUSHING	
090	2993136-0000		2	ROLLER	
110	19972-0000		2	WASHER	
320	315105-0146		2	WASHER BRB 5,3X10 RFR	
325	312705-0314		2	NUT HEX. DOMED CAP MHM-6 M5 A280	
TPA 0330SQ (See drawing on page: 4-20)					
010	1558123-0000		1	VOLUME FLAP	
020	1539903-0000		2	VOLUME BULGE	
030	1539902-0000		6	VOLUME SHIM	
070	2993134-0000		2	AXLE PIN	
080	1255541-0000		2	BUSHING	
090	2993136-0000		2	ROLLER	
110	19972-0000		2	WASHER	
320	315105-0146		2	WASHER BRB 5,3X10 RFR	
325	312105-0327		2	SCREW M6S ISO 4017 M5X12 A480	

Machine Type | Group Description | Used-In | Group Number | Page No

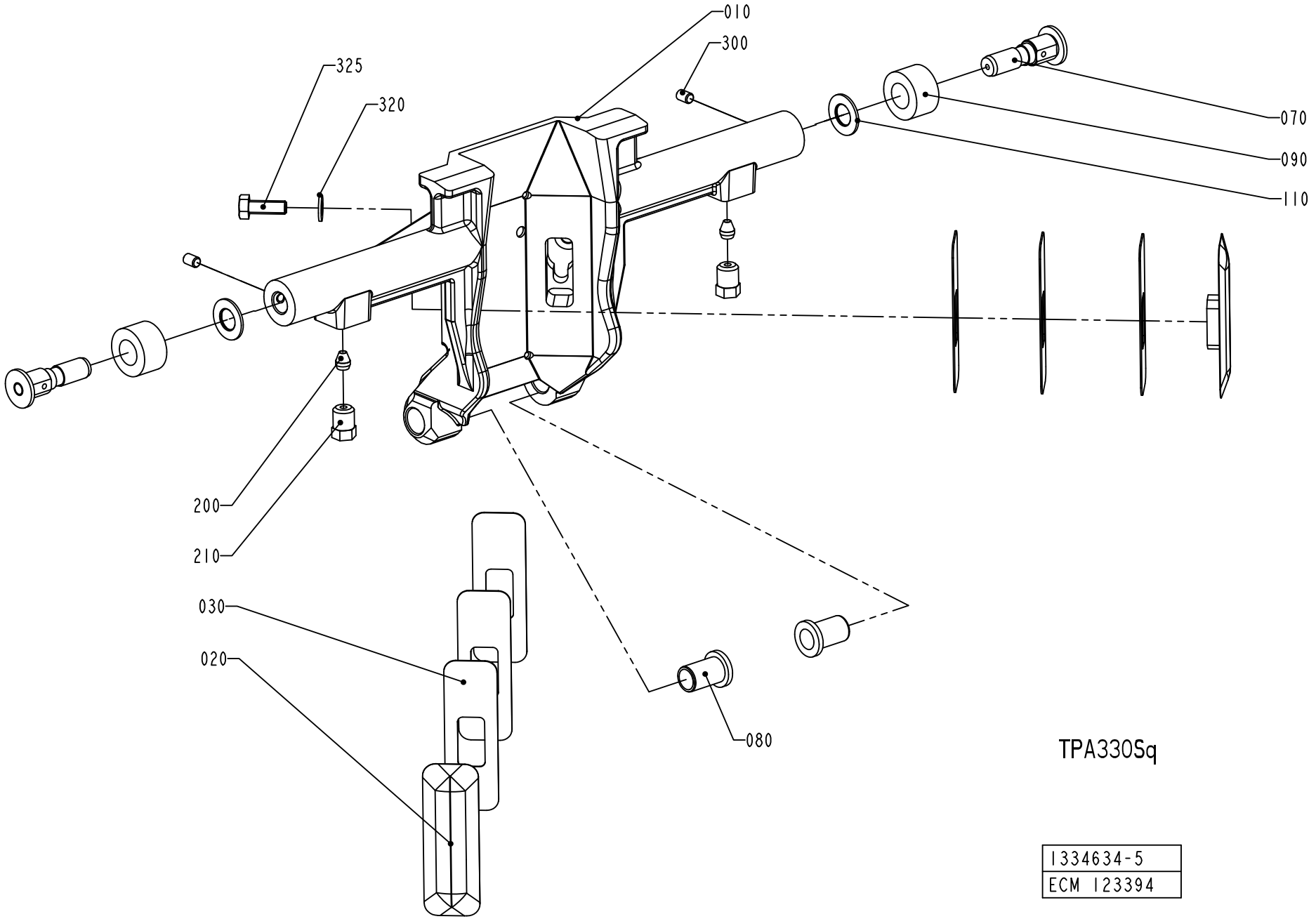
010
300
325
320
070
090
110
200
210
030
020
080
TPA330Sq
1334634-5
ECM 123394

Pos	Part No	UN	Qty	Description	Page No
TPA 0500SQ SMILE (Cont'd) (See drawing on page: 4-24)					
010	1549837-0000		1	VOLUME FLAP	
020	1549829-0000		1	VOLUME BULGE	
025	1549829-0000		2	VOLUME BULGE	
030	1549830-0000		3	VOLUME SHIM	
035	1549830-0000		6	VOLUME SHIM	
040	1549831-0000		3	WEDGE	
070	2993134-0000		2	AXLE PIN	
080	2530313-0000		2	BUSHING	
090	2993135-0000		2	ROLLER	
110	19972-0000		2	WASHER	
310	312105-0327		3	SCREW M6S ISO 4017 M5X12 A480	
320	315105-0146		3	WASHER BRB 5,3X10 RFR	
370	312155-0289		6	SCREW DIN 7991 MF6S M4X10 A4 70	
TPA 1000SQ FT (See drawing on page: 4-24)					
010	2547012-0000		1	VOLUME FLAP	
020	1539840-0000		1	VOLUME BULGE	
025	1539841-0000		2	VOLUME BULGE	
030	1539842-0000		3	VOLUME SHIM	
035	1539843-0000		6	VOLUME SHIM	
040	1040756-0000		3	WEDGE	
060	2547010-0000		1	BRACKET	
070	2993134-0000		2	AXLE PIN	
080	1255541-0000		2	BUSHING	
090	2993135-0000		2	ROLLER	
110	19972-0000		2	WASHER	
320	315105-0153		3	WASHER BRB 6,4X12 RFR	
360	312105-0368		3	SCREW M6S ISO 4017 M6X16 A480	
370	312155-0289		6	SCREW DIN 7991 MF6S M4X10 A4 70	
Common Parts					
200	90028-0020		2	CONE TUBE 2,5MM	
210	90134-0063		2	BUSHING/NUT M8X1, D=2,5 MM	
300	312318-0285		2	SCREW ISO4029 M4X6 A4	

Pos	Part No	UN	Qty	Description	Page No

VOLUME FLAP PRESSURE

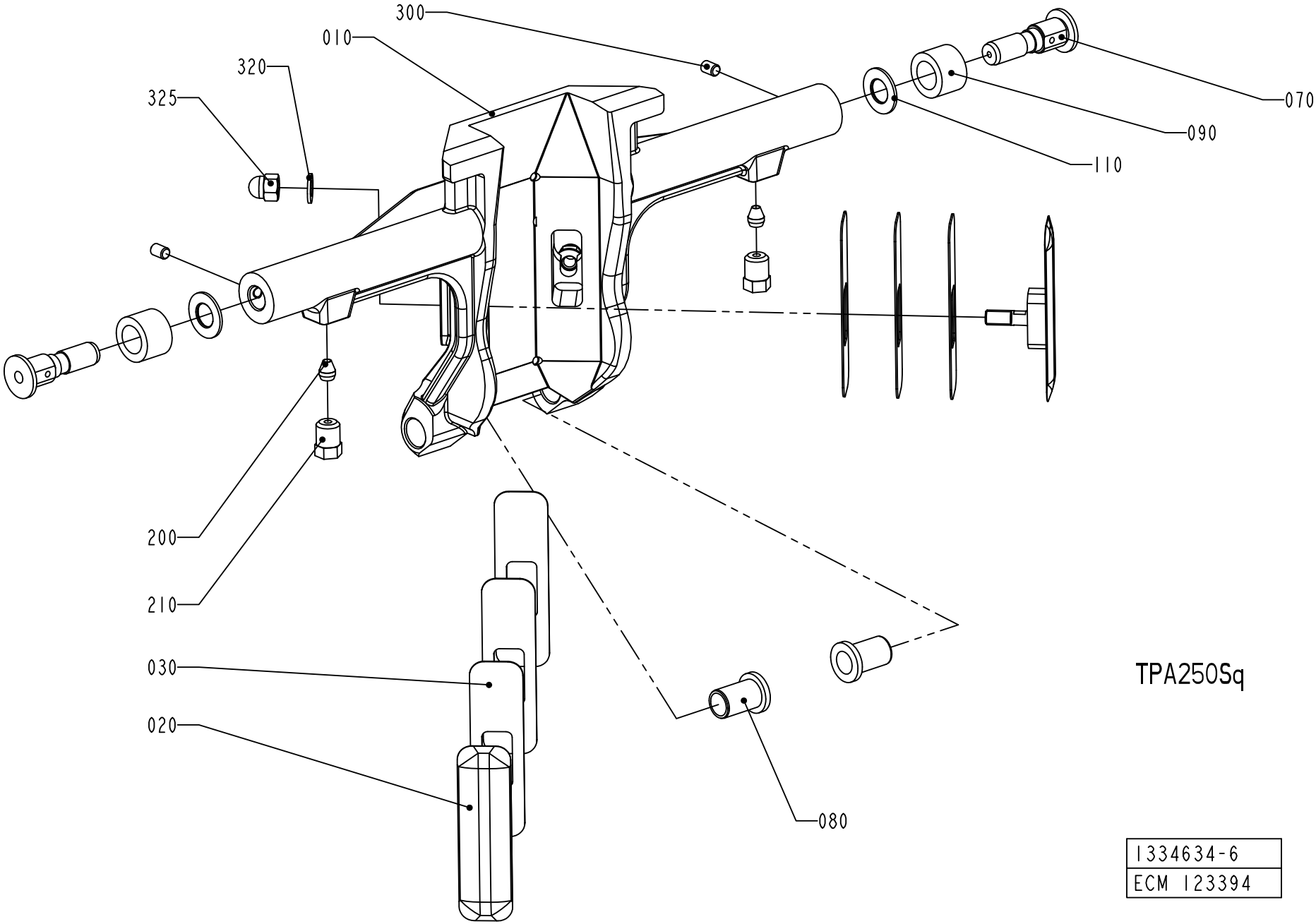

1334634-6
ECM 123394

ECM: 387843 - 20090403
Group number: 1334634-0200
Assembly Drawing: 1334634-6_1_AA

This list covers pages from 4-16 to 4-25

Pos	Part No	UN	Qty	Description	Page No
SEE PREVIOUS LISTS PAGES: 4-17, 4-19, 4-21.					

Pos	Part No	UN	Qty	Description	Page No

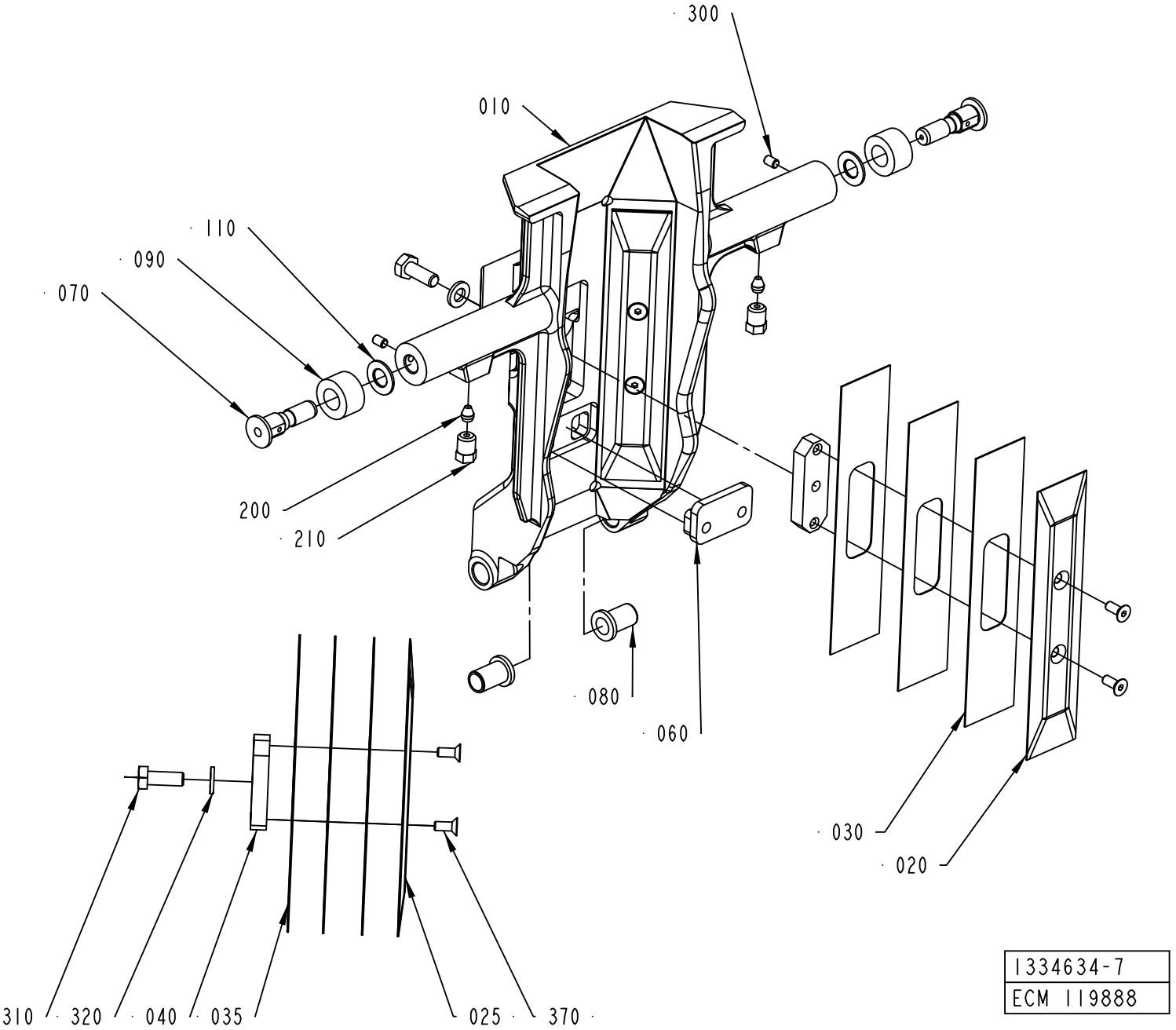
300
010
110
090
070
200
210
080
060
030
020
310
320
040
035
025
370
1334634-7
ECM 119888

ECM: 387843 - 20090403
Group number: 1334634-0200
Assembly Drawing: 1334634-7_1_AA

This list covers pages from 4-16 to 4-25

Pos	Part No	UN	Qty	Description	Page No
SEE PREVIOUS LISTS PAGES: 4-17, 4-19, 4-21.					

Pos	Part No	UN	Qty	Description	Page No

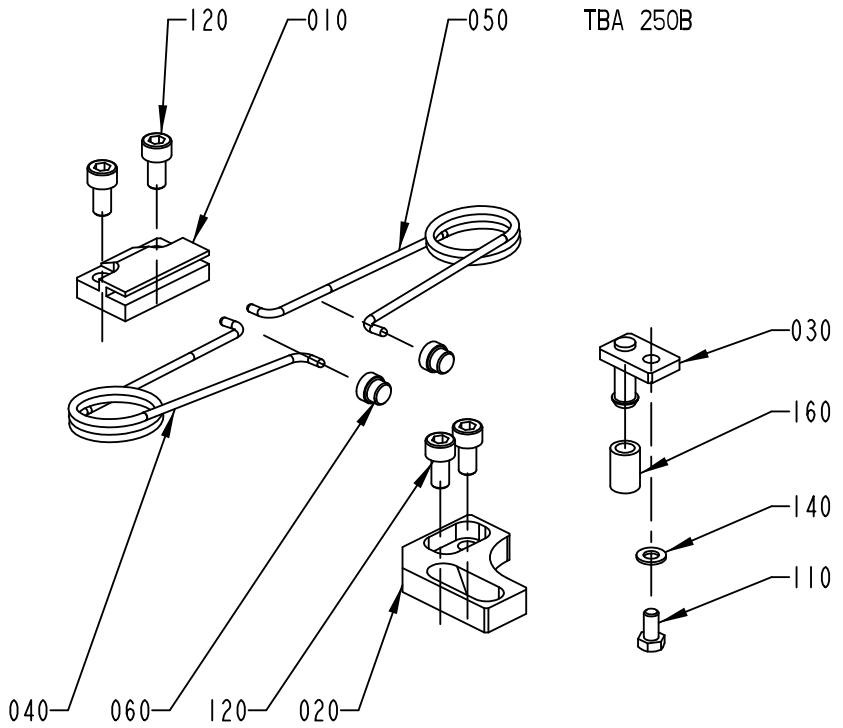

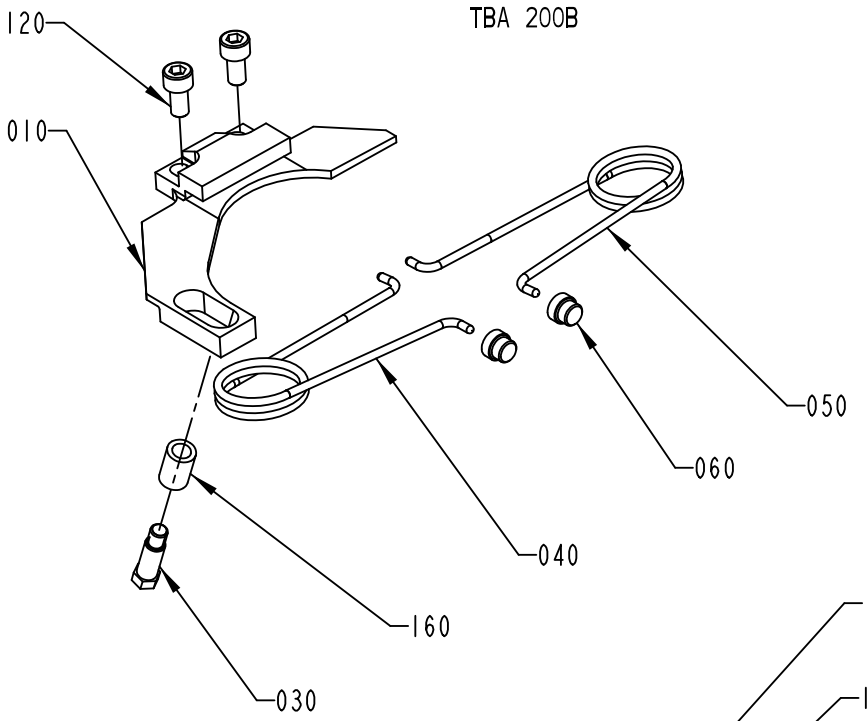

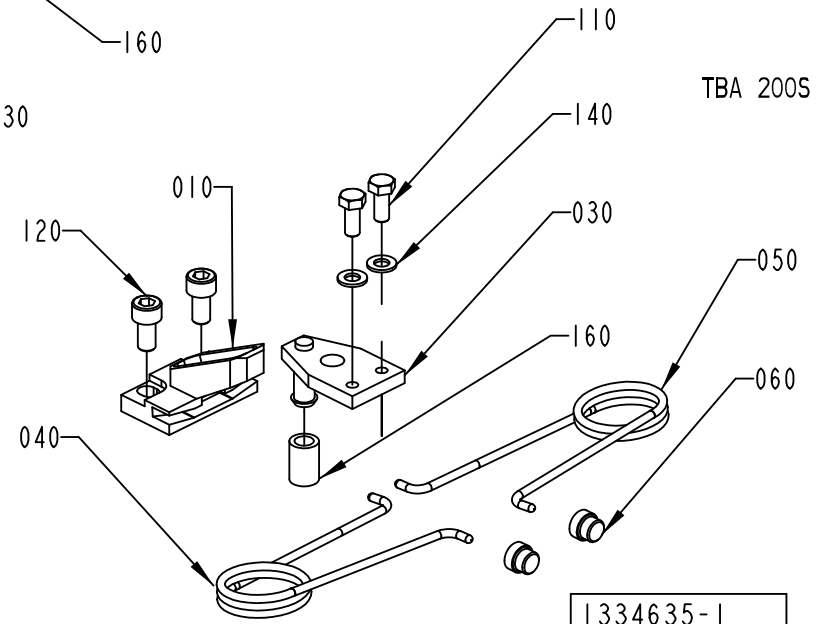

1334635-1
ECN 73647

ECM: 387842 - 20090403
Group number: 1334635-0200
Assembly Drawing: 1334635-1_1_AF

This list covers pages from 4-26 to 4-37

Pos	Part No	UN	Qty	Description	Page No
TBA 0200B (See drawing on page: 4-26)					
010	1512579-0000		1	BRACKET	
030	1346153-0000		1	STOP PIN	
040	1350263-0000		1	SPRING RIGHT	
050	1350264-0000		1	SPRING LEFT	
060	1144601-0000		2	GUIDE STUD	
120	312115-0366		2	SCREW ISO4762 M6X12 A4 80	
160	1317740-0000		1	RUBBER SLEEVE	
TBA 0200S (See drawing on page: 4-26)					
010	1317823-0000		1	CANTILEVER	
030	1317824-0000		1	CATCH	
040	1350263-0000		1	SPRING RIGHT	
050	1350264-0000		1	SPRING LEFT	
060	1144601-0000		2	GUIDE STUD	
110	312105-0327		2	SCREW M6S ISO 4017 M5X12 A480	
120	312115-0366		2	SCREW ISO4762 M6X12 A4 80	
140	315105-0146		2	WASHER BRB 5,3X10 RFR	
160	1317740-0000		1	RUBBER SLEEVE	
TBA 0250B (See drawing on page: 4-26)					
010	1317742-0000		1	CANTILEVER	
020	1317741-0000		1	CATCH	
030	1317440-0000		1	STOP PIN	
040	1350263-0000		1	SPRING RIGHT	
050	1350264-0000		1	SPRING LEFT	
060	1144601-0000		2	GUIDE STUD	
110	312105-0325		1	SCREW M6S ISO 4017 M5X10 A480	
120	312115-0366		4	SCREW ISO4762 M6X12 A4 80	
140	315105-0146		1	WASHER BRB 5,3X10 RFR	
160	1317740-0000		1	RUBBER SLEEVE	
TBA 0250S, TBA 0330S, TPA 0250SQ (See drawing on page: 4-30)					
010	1539172-0000		1	CANTILEVER	
030	2527725-0000		1	CATCH	
040	1350263-0000		1	SPRING RIGHT	
050	1350264-0000		1	SPRING LEFT	
060	1144601-0000		2	GUIDE STUD	
110	312105-0328		2	SCREW M6S ISO 4017 M5X14 A480	
120	312115-0368		2	SCREW ISO4762 M6X16 A4 80	
TBA 0500B (See drawing on page: 4-30)					
010	1539886-0000		1	CANTILEVER	
030	1539887-0000		1	CATCH	
040	1350263-0000		1	SPRING RIGHT	
050	1350264-0000		1	SPRING LEFT	
060	1144601-0000		2	GUIDE STUD	
110	312105-0327		2	SCREW M6S ISO 4017 M5X12 A480	
120	312115-0366		2	SCREW ISO4762 M6X12 A4 80	
TBA 0500S (See drawing on page: 4-28)					
010	1349319-0000		1	CANTILEVER	
030	1349320-0000		1	CATCH	
040	1143216-0000		1	SPRING	
050	1143215-0000		1	SPRING	
060	1144601-0000		2	GUIDE STUD	
110	312115-0374		2	SCREW ISO4762 M6X30 A4 80	
115	312605-0316		2	HEXAGON NUT, M6M M6 A280	
120	312115-0378		2	SCREW ISO4762 M6X40 A4 80	
170	1511556-0000		1	SET SCREW	
180	312605-0318		1	HEXAGON NUT, M6M M8 A280	
TBA 1000B (See drawing on page: 4-28)					
010	1347526-0000		1	BRACKET	
020	1478396-0000		1	STOP	
030	1478393-0000		1	CATCH	
040	1348483-0000		1	SPRING RIGHT	
050	1348484-0000		1	SPRING LEFT	
060	1144601-0000		2	GUIDE STUD	
100	312105-0368		4	SCREW M6S ISO 4017 M6X16 A480	
110	312115-0329		2	SCREW ISO4762 M5X16 A4 80	
130	315105-0153		4	WASHER BRB 6,4X12 RFR	
TBA 1000S (See drawing on page: 4-28)					
010	1347526-0000		1	BRACKET	
020	1478396-0000		1	STOP	
030	1478395-0000		1	CATCH	
040	1348483-0000		1	SPRING RIGHT	
050	1348484-0000		1	SPRING LEFT	
060	1144601-0000		2	GUIDE STUD	
100	312105-0368		4	SCREW M6S ISO 4017 M6X16 A480	
110	312115-0329		2	SCREW ISO4762 M5X16 A4 80	
130	315105-0153		4	WASHER BRB 6,4X12 RFR	
TBA 1000SQ (See drawing on page: 4-28)					
010	1349319-0000		1	CANTILEVER	
030	1349320-0000		1	CATCH	
040	1143216-0000		1	SPRING	
050	1143215-0000		1	SPRING	
060	1144601-0000		2	GUIDE STUD	
110	312105-0368		2	SCREW M6S ISO 4017 M6X16 A480	
115	312605-0316		2	HEXAGON NUT, M6M M6 A280	

Machine Type | Group Description | Used-In | Group Number | Page No

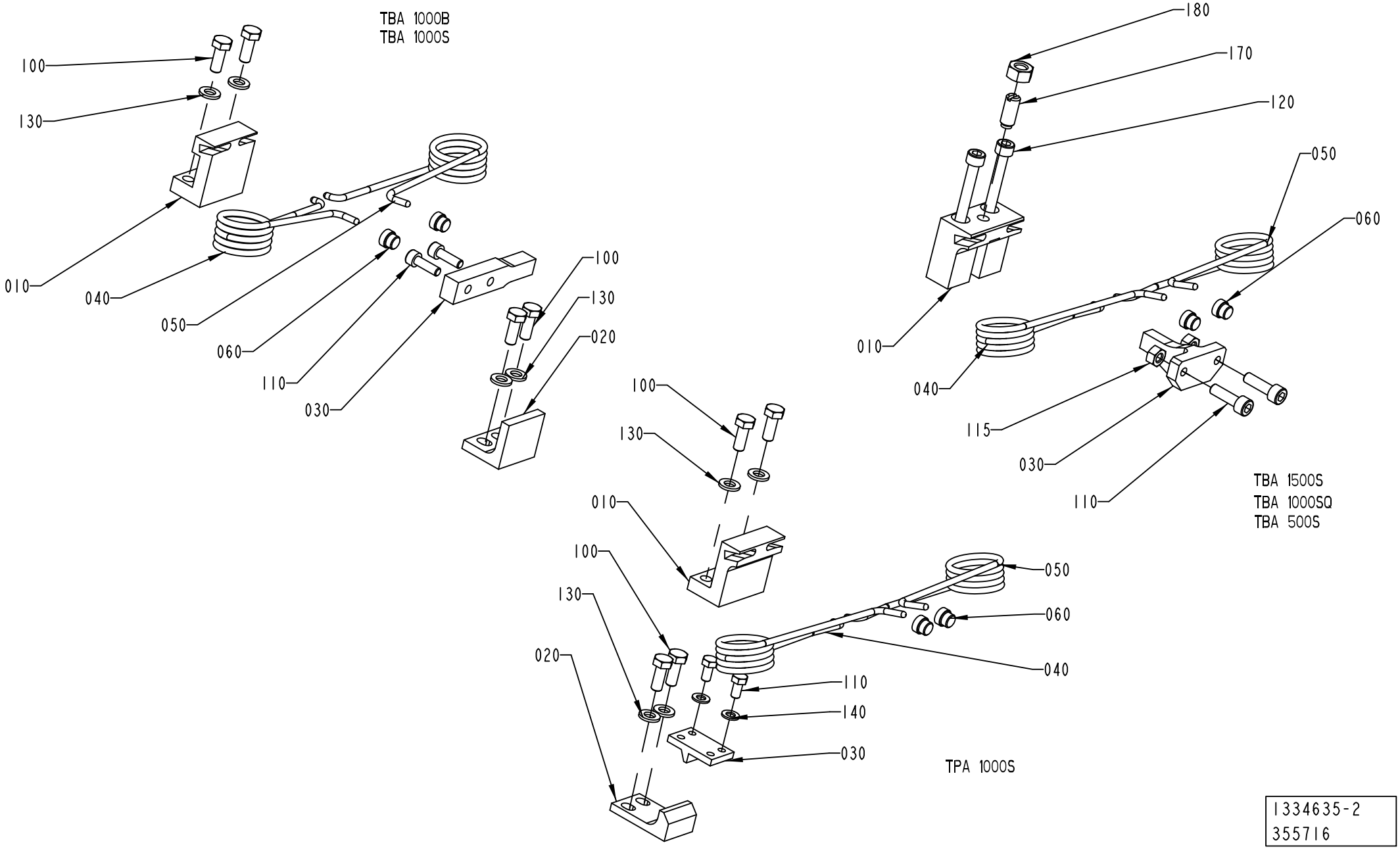

1334635-2
355716

Pos	Part No	UN	Qty	Description	Page No
TBA 1000SQ (Cont'd) (See drawing on page: 4-28)					
120	312115-0378		2	SCREW ISO4762 M6X40 A4 80	
170	1511556-0000		1	SET SCREW	
180	312605-0318		1	HEXAGON NUT, M6M M8 A280	
TBA 1500S (See drawing on page: 4-28)					
010	1349319-0000		1	CANTILEVER	
030	1349320-0000		1	CATCH	
040	1143216-0000		1	SPRING	
050	1143215-0000		1	SPRING	
060	1144601-0000		2	GUIDE STUD	
110	312115-0370		2	SCREW ISO4762 M6X20 A4 80	
115	312605-0316		2	HEXAGON NUT, M6M M6 A280	
120	312115-0378		2	SCREW ISO4762 M6X40 A4 80	
170	1511556-0000		1	SET SCREW	
180	312605-0318		1	HEXAGON NUT, M6M M8 A280	
TBA 1890S, TBA 2000S, TBA 1400B (See drawing on page: 4-36)					
010	2634515-0000		1	CANTILEVER	
040	2662165-0000		1	SPRING	
050	2662166-0000		1	SPRING	
075	2652896-0000		2	SHAFT	
080	2662167-0000		2	BUSHING	
090	2663376-0000		2	WASHER	
095	2663375-0000		2	WASHER	
100	312115-0367		2	SCREW ISO4762 M6X14 A4 80	
120	312105-0331		1	SCREW M6S ISO 4017 M5X20 A480	
125	312105-0341		2	SCREW M6S ISO 4014 M5X50 A480	
130	315105-0146		3	WASHER BRB 5,3X10 RFR	
190	312105-0367		2	SCREW M6S ISO 4017 M6X14 A480	
TPA 0330SQ (See drawing on page: 4-30)					
010	1539172-0000		1	CANTILEVER	
030	1539887-0000		1	CATCH	
040	1350263-0000		1	SPRING RIGHT	
050	1350264-0000		1	SPRING LEFT	
060	1144601-0000		2	GUIDE STUD	
110	312105-0325		2	SCREW M6S ISO 4017 M5X10 A480	
120	312115-0368		2	SCREW ISO4762 M6X16 A4 80	
TPA 0500SQ (See drawing on page: 4-32)					
010	2563666-0000		1	CANTILEVER	
030	2527725-0000		1	CATCH	
040	2679736-0000		1	SPRING	
050	2679735-0000		1	SPRING	
070	2563671-0000		1	SHAFT	
075	2563667-0000		2	SHAFT	
080	1538521-0000		2	BUSHING	
085	1539348-0000		2	HOLDER	
110	312105-0327		2	SCREW M6S ISO 4017 M5X12 A480	
120	312115-0366		2	SCREW ISO4762 M6X12 A4 80	
130	315105-0153		2	WASHER BRB 6,4X12 RFR	
190	312155-0339		2	SCREW DIN 7991 MF6S M5X40 A4 70	
200	312115-0367		2	SCREW ISO4762 M6X14 A4 80	
210	90005-0002		2	WASHER 16/6,7X1,5	
220	312105-0287		2	SCREW M6S ISO 4017 M4X8 A470	
TPA 1000SQ (See drawing on page: 4-34)					
010	1523475-0000		1	CANTILEVER	
020	2558921-0000		1	STOP	
025	2558923-0000		1	PARAGEM	
040	2557613-0000		1	SPRING	
050	2557612-0000		1	SPRING	
060	1144601-0000		2	GUIDE STUD	
070	2558929-0000		1	BAR	
100	312105-0368		10	SCREW M6S ISO 4017 M6X16 A480	
120	312105-0364		2	SCREW M6S ISO 4017 M6X10 A480	
130	315105-0153		10	WASHER BRB 6,4X12 RFR	
150	90062-0061		2	LOCK WASHER NORD-LOCK,6,5/10,8, T=2,2	

Machine Type | Group Description | Used-In | Group Number | Page No

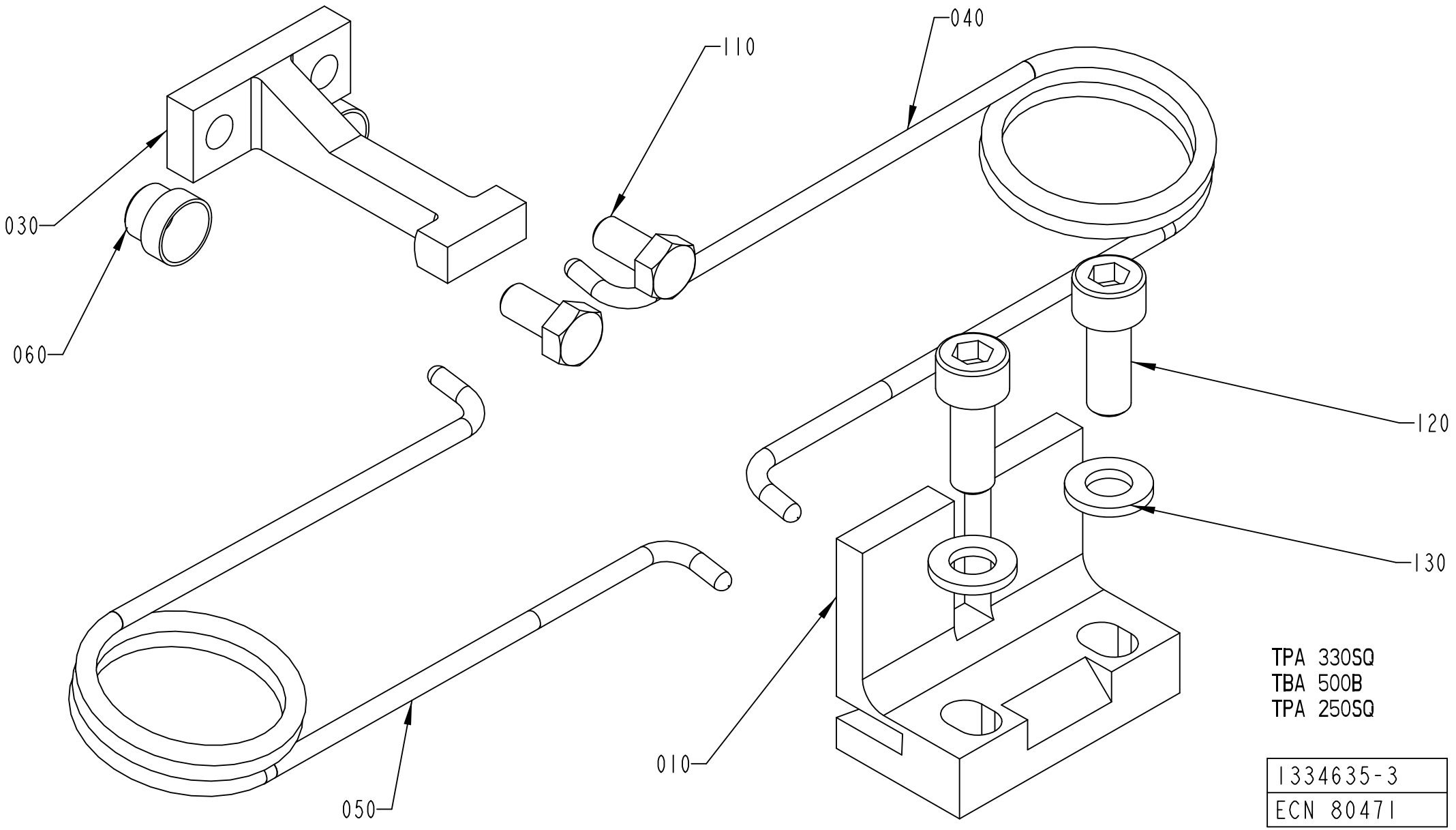
040
110
030
060
120
130
050
010
TPA 330SQ
TBA 500B
TPA 250SQ
1334635-3
ECN 80471

Pos	Part No	UN	Qty	Description	Page No
SEE PREVIOUS LISTS PAGES: 4-27, 4-29.					

Pos	Part No	UN	Qty	Description	Page No

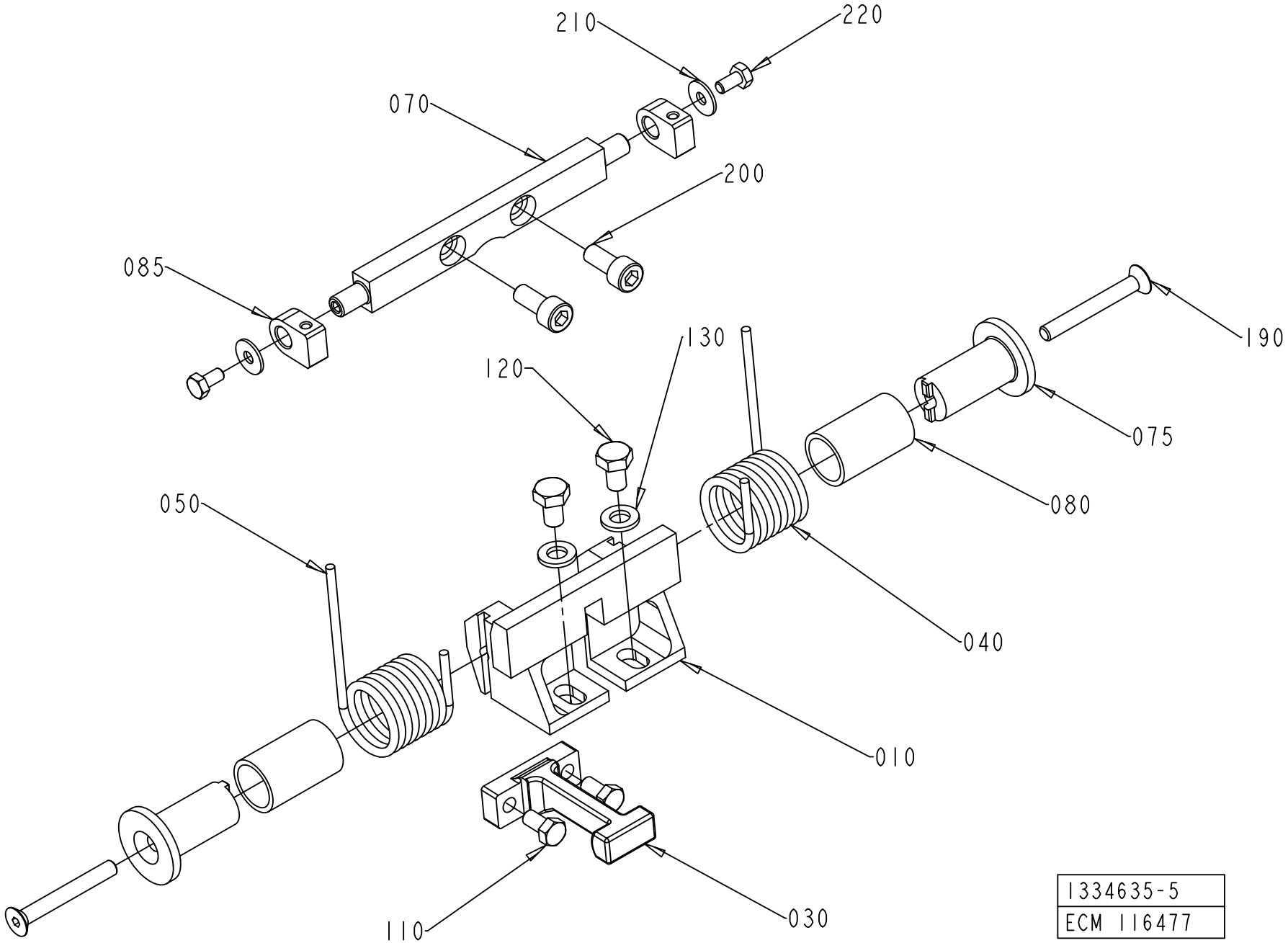

1334635-5
ECM 116477

Pos	Part No	UN	Qty	Description	Page No
SEE PREVIOUS LISTS PAGES: 4-27, 4-29.					

Pos	Part No	UN	Qty	Description	Page No

SHOCK ABSORBER

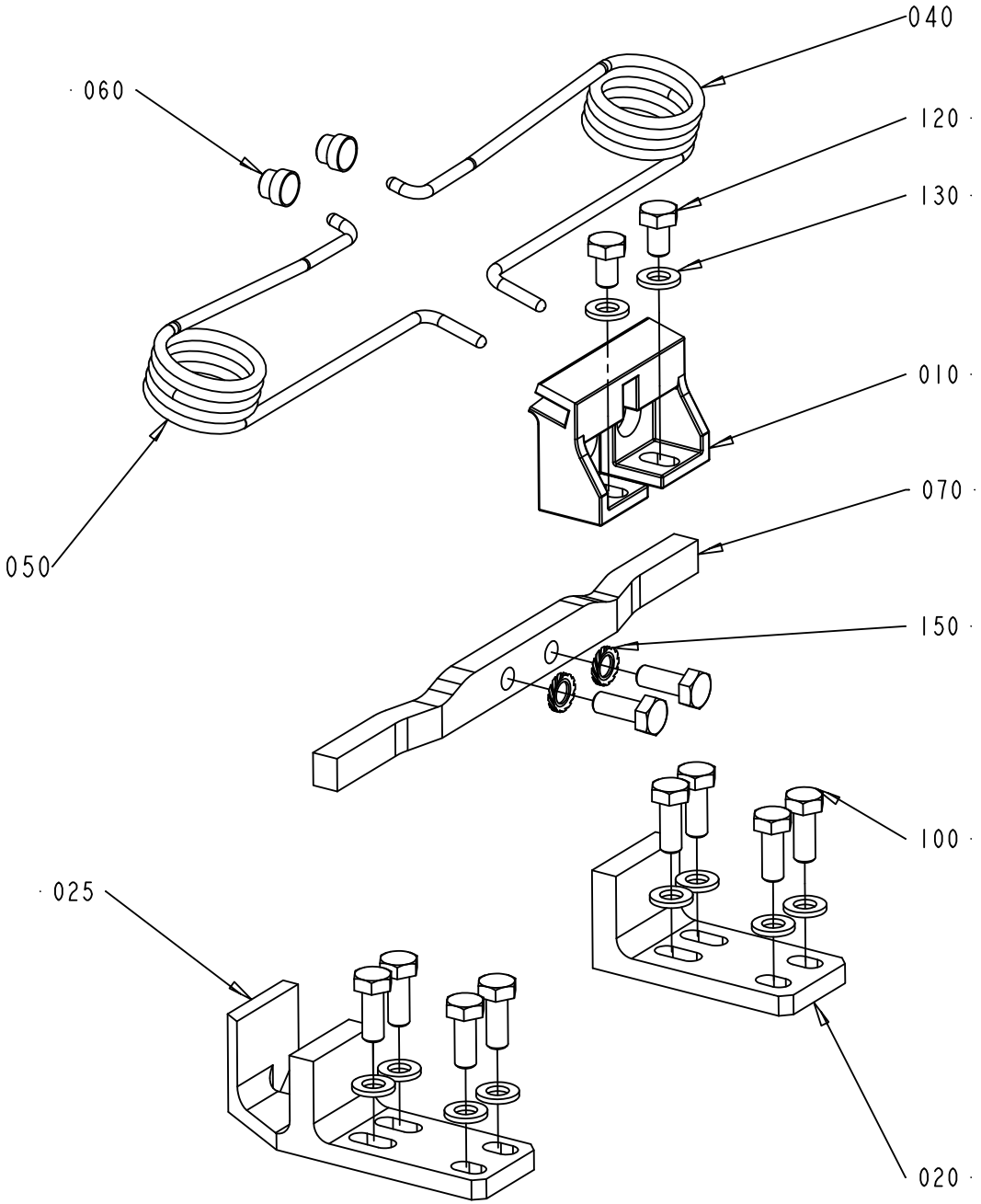

1334635-6
ECM 119888

Pos	Part No	UN	Qty	Description	Page No
SEE PREVIOUS LISTS PAGES: 4-27, 4-29.					

Pos	Part No	UN	Qty	Description	Page No

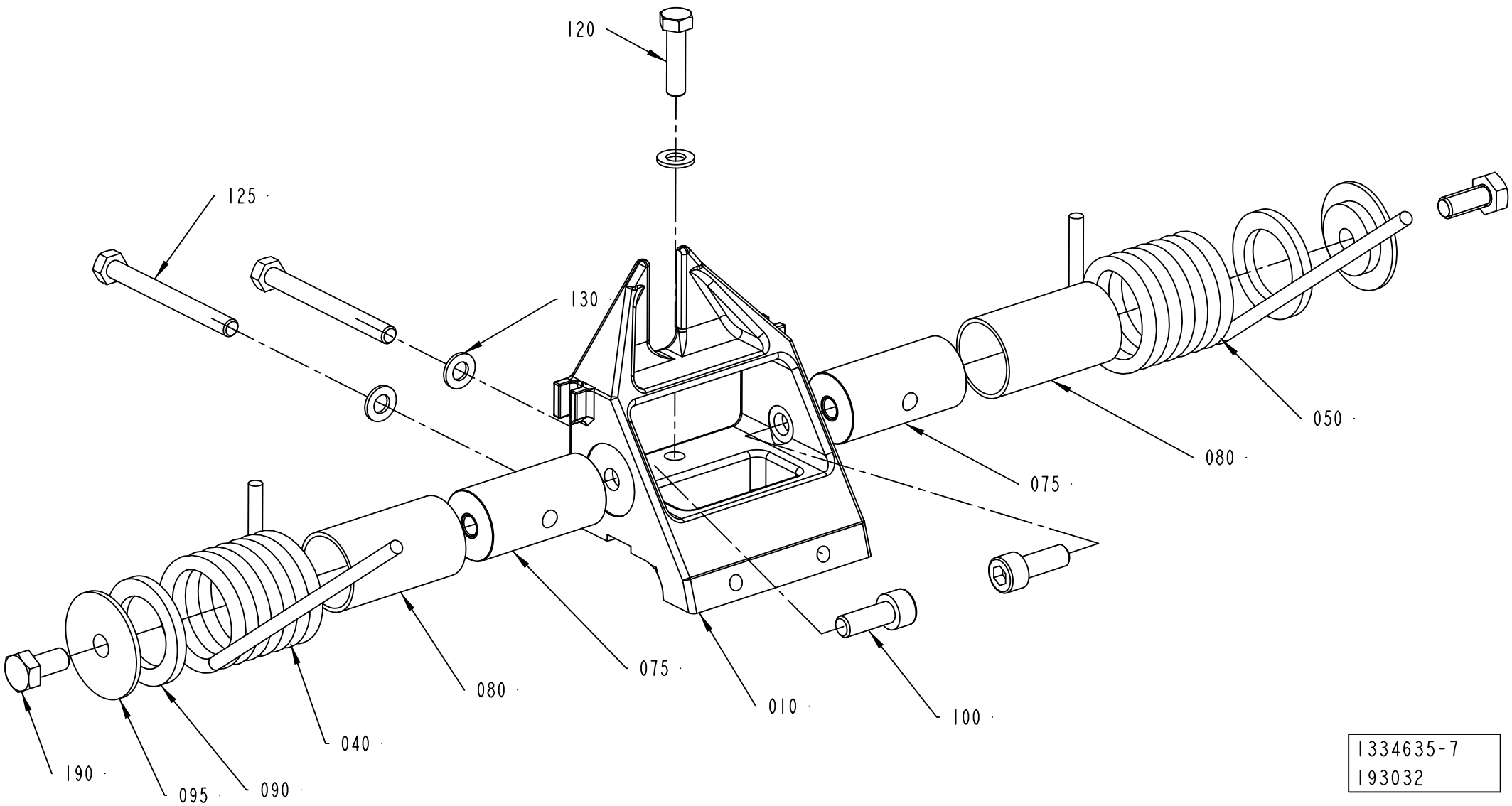

1334635-7
193032

Pos	Part No	UN	Qty	Description	Page No
SEE PREVIOUS LISTS PAGES: 4-27, 4-29.					

Pos	Part No	UN	Qty	Description	Page No

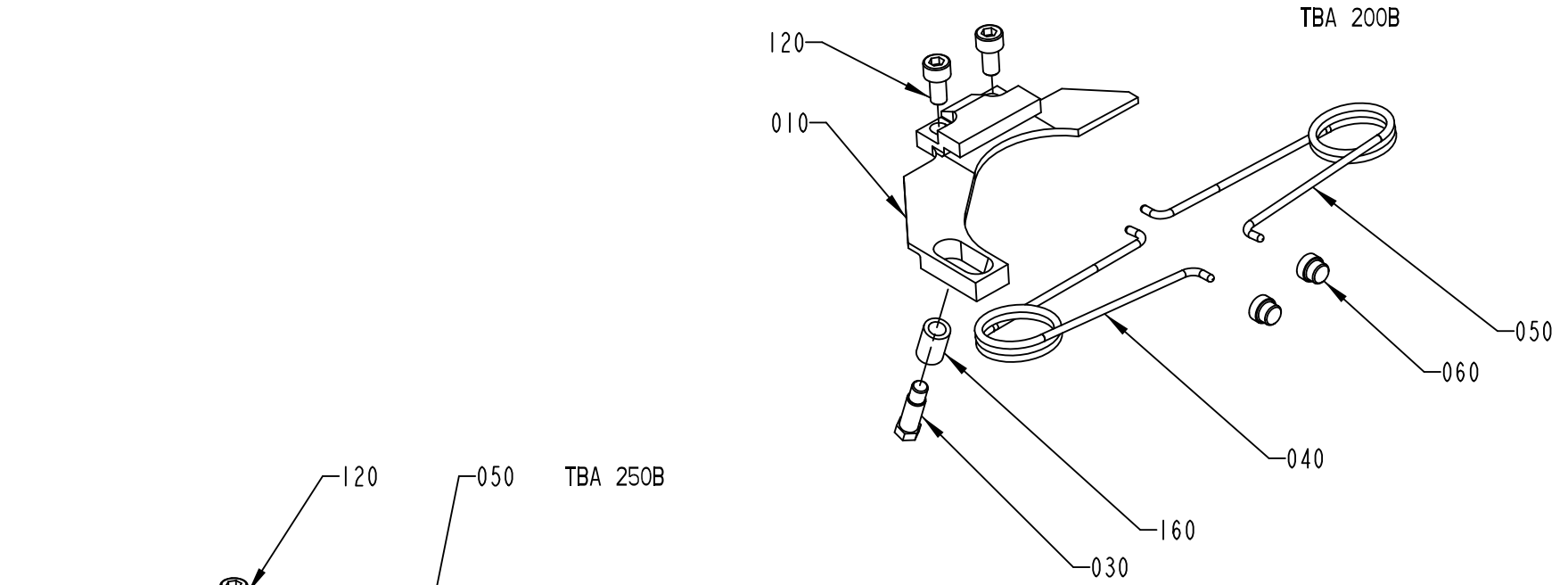

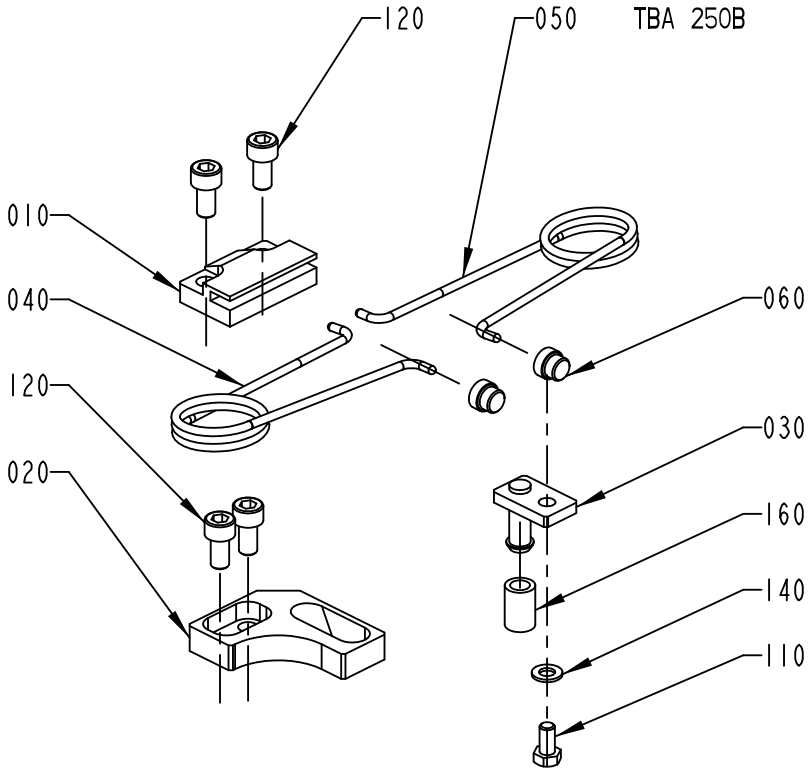

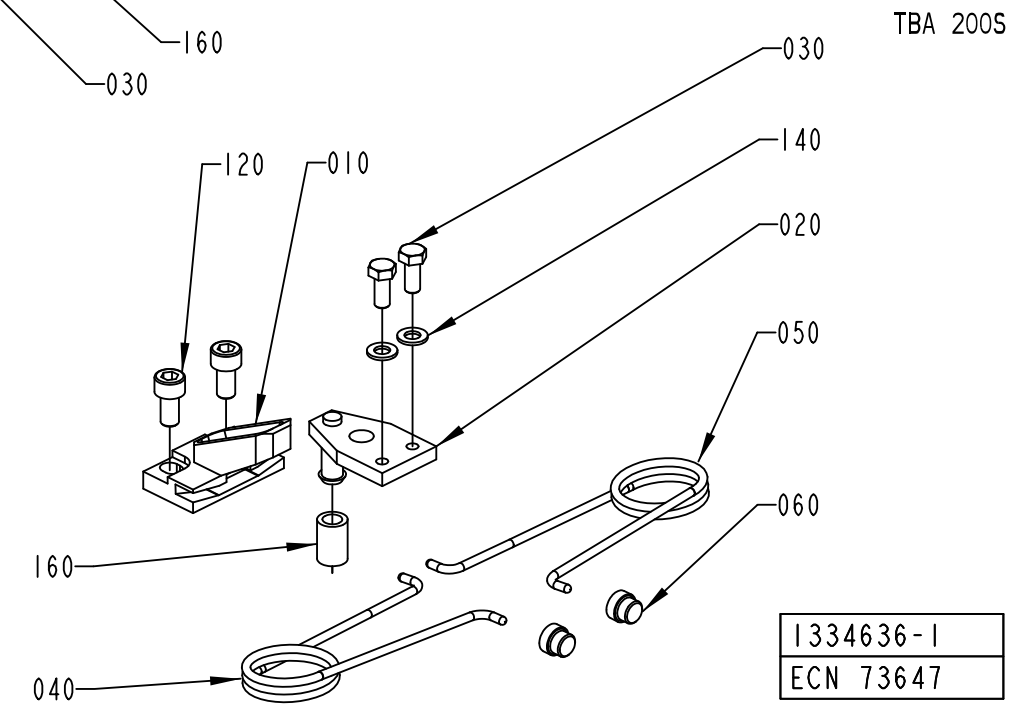

1334636-1
ECN 73647

ECM: 387841 - 20090403
Group number: 1334636-0200
Assembly Drawing: 1334636-1_1_AF

This list covers pages from 4-38 to 4-49

Pos	Part No	UN	Qty	Description	Page No
TBA 0200B (See drawing on page: 4-38)					
010	1512579-0000		1	BRACKET	
030	1346153-0000		1	STOP PIN	
040	1350263-0000		1	SPRING RIGHT	
050	1350264-0000		1	SPRING LEFT	
060	1144601-0000		2	GUIDE STUD	
120	312115-0366		2	SCREW ISO4762 M6X12 A4 80	
160	1317740-0000		1	RUBBER SLEEVE	
TBA 0200S (See drawing on page: 4-38)					
010	1317823-0000		1	CANTILEVER	
030	1317824-0000		1	CATCH	
040	1350263-0000		1	SPRING RIGHT	
050	1350264-0000		1	SPRING LEFT	
060	1144601-0000		2	GUIDE STUD	
110	312105-0327		2	SCREW M6S ISO 4017 M5X12 A480	
120	312115-0366		2	SCREW ISO4762 M6X12 A4 80	
140	315105-0146		2	WASHER BRB 5,3X10 RFR	
160	1317740-0000		1	RUBBER SLEEVE	
TBA 0250B (See drawing on page: 4-38)					
010	1317742-0000		1	CANTILEVER	
020	1317439-0000		1	CATCH	
030	1317440-0000		1	STOP PIN	
040	1350263-0000		1	SPRING RIGHT	
050	1350264-0000		1	SPRING LEFT	
060	1144601-0000		2	GUIDE STUD	
110	312105-0325		1	SCREW M6S ISO 4017 M5X10 A480	
120	312115-0366		4	SCREW ISO4762 M6X12 A4 80	
140	315105-0146		1	WASHER BRB 5,3X10 RFR	
160	1317740-0000		1	RUBBER SLEEVE	
TBA 0250S, TBA 0330S, TPA 0250SQ (See drawing on page: 4-42)					
010	1539172-0000		1	CANTILEVER	
030	2527725-0000		1	CATCH	
040	1350263-0000		1	SPRING RIGHT	
050	1350264-0000		1	SPRING LEFT	
060	1144601-0000		2	GUIDE STUD	
110	312105-0328		2	SCREW M6S ISO 4017 M5X14 A480	
120	312115-0368		2	SCREW ISO4762 M6X16 A4 80	
TBA 0500B (See drawing on page: 4-42)					
010	1539886-0000		1	CANTILEVER	
030	1539887-0000		1	CATCH	
040	1350263-0000		1	SPRING RIGHT	
050	1350264-0000		1	SPRING LEFT	
060	1144601-0000		2	GUIDE STUD	
110	312105-0327		2	SCREW M6S ISO 4017 M5X12 A480	
120	312115-0366		2	SCREW ISO4762 M6X12 A4 80	
TBA 0500S (See drawing on page: 4-40)					
010	1349319-0000		1	CANTILEVER	
030	1349320-0000		1	CATCH	
040	1143216-0000		1	SPRING	
050	1143215-0000		1	SPRING	
060	1144601-0000		2	GUIDE STUD	
110	312115-0374		2	SCREW ISO4762 M6X30 A4 80	
115	312605-0316		2	HEXAGON NUT, M6M M6 A280	
120	312115-0378		2	SCREW ISO4762 M6X40 A4 80	
170	1511556-0000		1	SET SCREW	
180	312605-0318		1	HEXAGON NUT, M6M M8 A280	
TBA 1000B (See drawing on page: 4-40)					
010	1347526-0000		1	BRACKET	
020	1478396-0000		1	STOP	
030	1478393-0000		1	CATCH	
040	1348483-0000		1	SPRING RIGHT	
050	1348484-0000		1	SPRING LEFT	
060	1144601-0000		2	GUIDE STUD	
100	312105-0368		4	SCREW M6S ISO 4017 M6X16 A480	
110	312115-0329		2	SCREW ISO4762 M5X16 A4 80	
130	315105-0153		4	WASHER BRB 6,4X12 RFR	
TBA 1000S (See drawing on page: 4-40)					
010	1347526-0000		1	BRACKET	
020	1478396-0000		1	STOP	
030	1478395-0000		1	CATCH	
040	1348483-0000		1	SPRING RIGHT	
050	1348484-0000		1	SPRING LEFT	
060	1144601-0000		2	GUIDE STUD	
100	312105-0368		4	SCREW M6S ISO 4017 M6X16 A480	
110	312115-0329		2	SCREW ISO4762 M5X16 A4 80	
130	315105-0153		4	WASHER BRB 6,4X12 RFR	
TBA 1000SQ (See drawing on page: 4-40)					
010	1349319-0000		1	CANTILEVER	
030	1349320-0000		1	CATCH	
040	1143216-0000		1	SPRING	
050	1143215-0000		1	SPRING	
060	1144601-0000		2	GUIDE STUD	
110	312105-0368		2	SCREW M6S ISO 4017 M6X16 A480	
115	312605-0316		2	HEXAGON NUT, M6M M6 A280	

Machine Type | Group Description | Used-In | Group Number | Page No

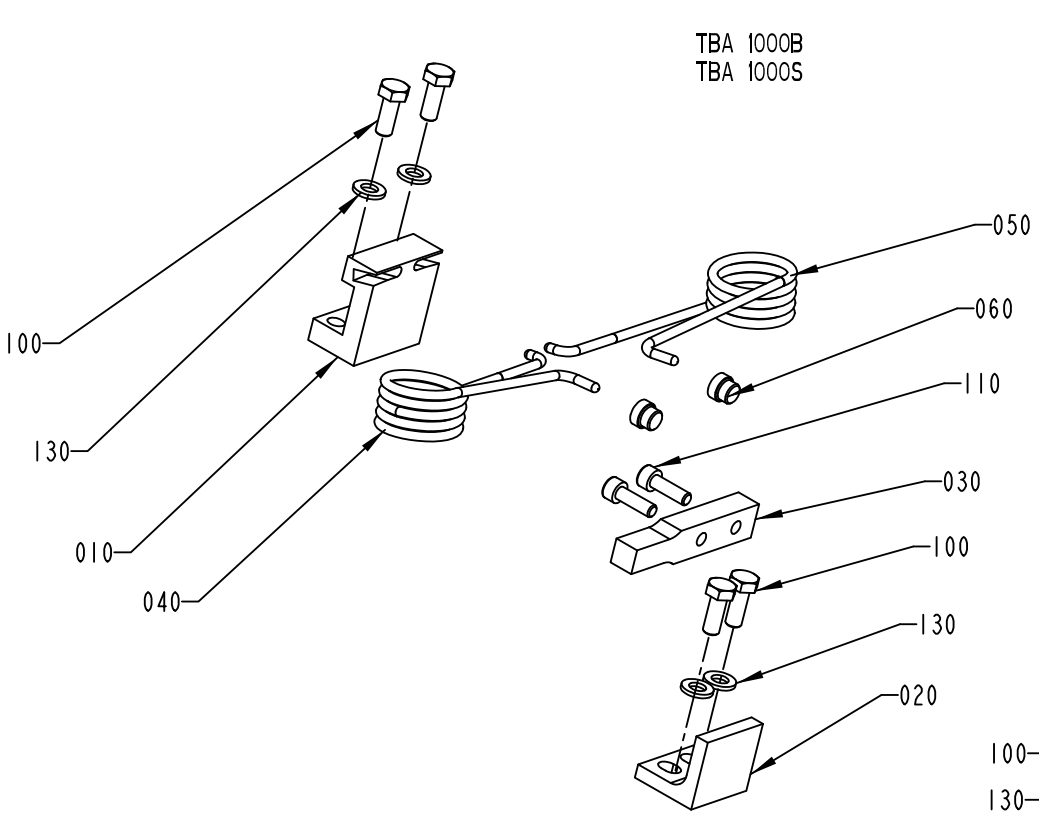

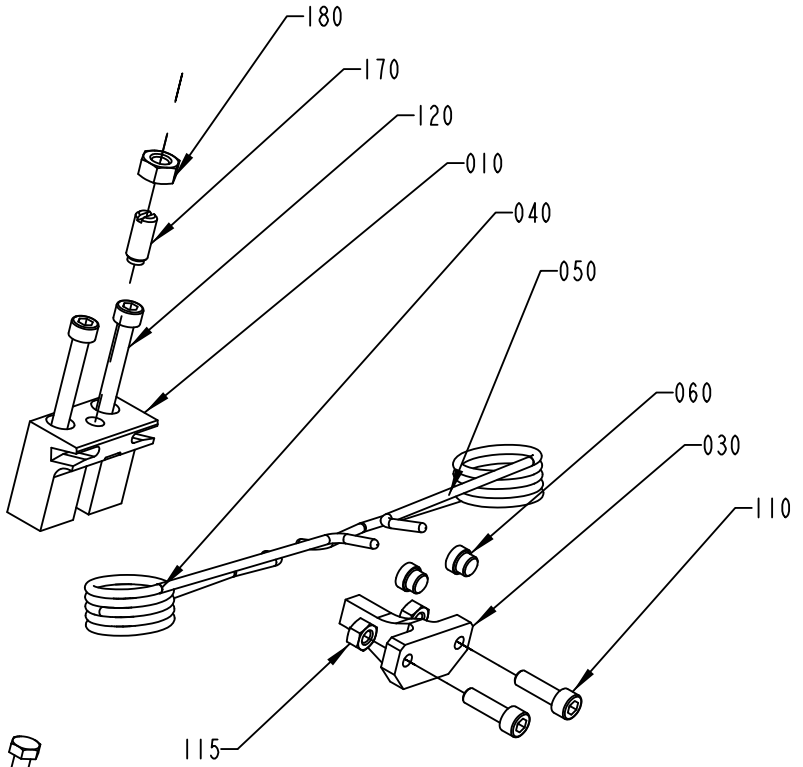

TBA 1500S
TBA 1000SQ
TBA 500S

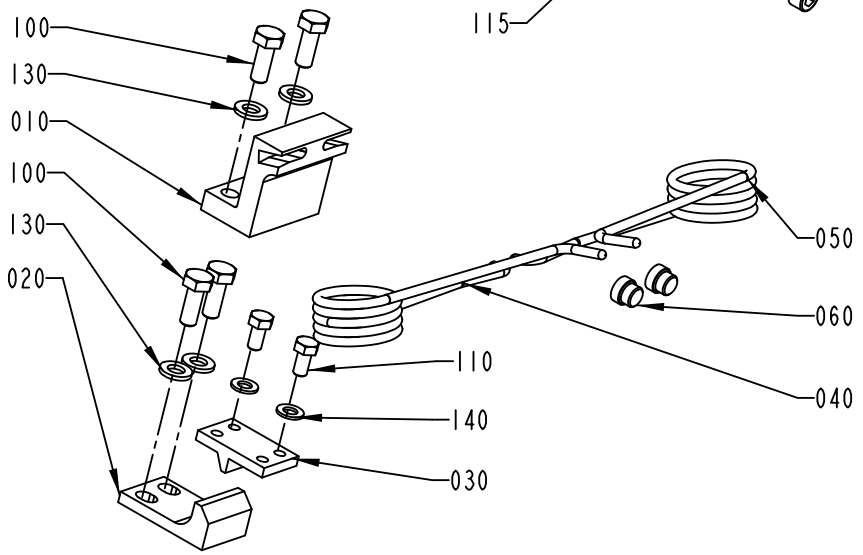

TPA 1000S

1334636-2
355716

Pos	Part No	UN	Qty	Description	Page No
TBA 1000SQ (Cont'd) (See drawing on page: 4-40)					
120	312115-0378		2	SCREW ISO4762 M6X40 A4 80	
170	1511556-0000		1	SET SCREW	
180	312605-0318		1	HEXAGON NUT, M6M M8 A280	
TBA 1500S (See drawing on page: 4-40)					
010	1349319-0000		1	CANTILEVER	
030	1349320-0000		1	CATCH	
040	1143216-0000		1	SPRING	
050	1143215-0000		1	SPRING	
060	1144601-0000		2	GUIDE STUD	
110	312115-0370		2	SCREW ISO4762 M6X20 A4 80	
115	312605-0316		2	HEXAGON NUT, M6M M6 A280	
120	312115-0378		2	SCREW ISO4762 M6X40 A4 80	
170	1511556-0000		1	SET SCREW	
180	312605-0318		1	HEXAGON NUT, M6M M8 A280	
TBA 1890S, TBA 2000S, TBA 1400B (See drawing on page: 4-48)					
010	2634515-0000		1	CANTILEVER	
040	2662165-0000		1	SPRING	
050	2662166-0000		1	SPRING	
075	2652896-0000		2	SHAFT	
080	2662167-0000		2	BUSHING	
090	2663376-0000		2	WASHER	
095	2663375-0000		2	WASHER	
100	312115-0367		2	SCREW ISO4762 M6X14 A4 80	
120	312105-0331		1	SCREW M6S ISO 4017 M5X20 A480	
125	312105-0341		2	SCREW M6S ISO 4014 M5X50 A480	
130	315105-0146		3	WASHER BRB 5,3X10 RFR	
190	312105-0367		2	SCREW M6S ISO 4017 M6X14 A480	
TPA 0330SQ (See drawing on page: 4-42)					
010	1539172-0000		1	CANTILEVER	
030	1539887-0000		1	CATCH	
040	1350263-0000		1	SPRING RIGHT	
050	1350264-0000		1	SPRING LEFT	
060	1144601-0000		2	GUIDE STUD	
110	312105-0325		2	SCREW M6S ISO 4017 M5X10 A480	
120	312115-0368		2	SCREW ISO4762 M6X16 A4 80	
TPA 0500SQ (See drawing on page: 4-44)					
010	2563666-0000		1	CANTILEVER	
030	2527725-0000		1	CATCH	
040	2679736-0000		1	SPRING	
050	2679735-0000		1	SPRING	
070	2563671-0000		1	SHAFT	
075	2563667-0000		2	SHAFT	
080	1538521-0000		2	BUSHING	
085	1539348-0000		2	HOLDER	
110	312105-0327		2	SCREW M6S ISO 4017 M5X12 A480	
120	312115-0366		2	SCREW ISO4762 M6X12 A4 80	
130	315105-0153		2	WASHER BRB 6,4X12 RFR	
190	312155-0339		2	SCREW DIN 7991 MF6S M5X40 A4 70	
200	312115-0367		2	SCREW ISO4762 M6X14 A4 80	
210	90005-0002		2	WASHER 16/6,7X1,5	
220	312105-0287		2	SCREW M6S ISO 4017 M4X8 A470	
TPA 1000SQ (See drawing on page: 4-46)					
010	1523475-0000		1	CANTILEVER	
020	2558920-0000		1	STOP	
025	2558922-0000		1	PARAGEMS	
040	2557613-0000		1	SPRING	
050	2557612-0000		1	SPRING	
060	1144601-0000		2	GUIDE STUD	
070	2558929-0000		1	BAR	
100	312105-0368		10	SCREW M6S ISO 4017 M6X16 A480	
120	312105-0364		2	SCREW M6S ISO 4017 M6X10 A480	
130	315105-0153		10	WASHER BRB 6,4X12 RFR	
150	90062-0061		2	LOCK WASHER NORD-LOCK,6,5/10,8, T=2,2	

Machine Type | Group Description | Used-In | Group Number | Page No

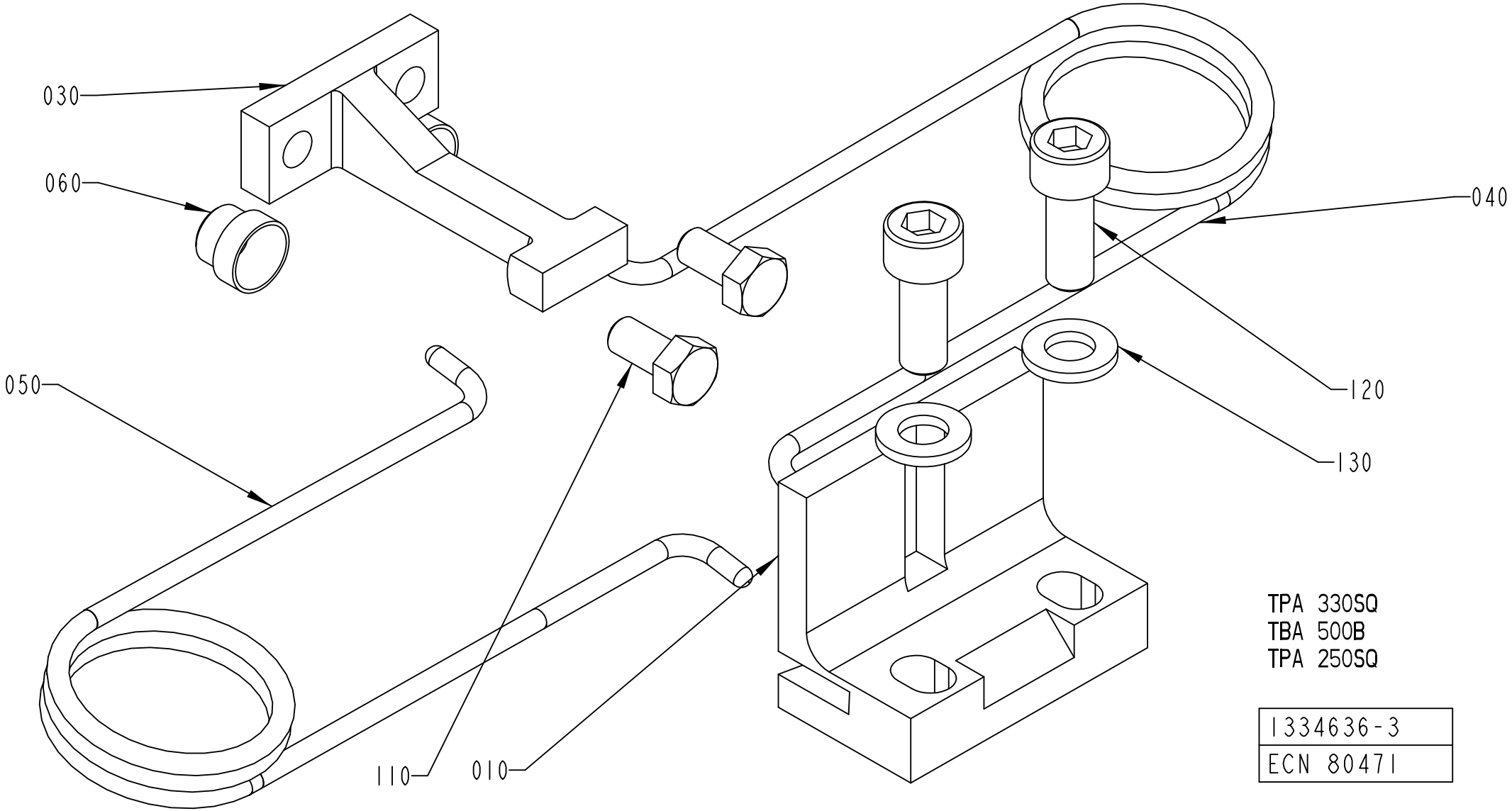
030
060
040
050
120
130
110
010
TPA 330SQ
TBA 500B
TPA 250SQ
1334636-3
ECN 80471

ECM: 387841 - 20090403
Group number: 1334636-0200
Assembly Drawing: 1334636-3_1_AA

This list covers pages from 4-38 to 4-49

Pos	Part No	UN	Qty	Description	Page No
SEE PREVIOUS LISTS PAGES: 4-39, 4-41.					

Pos	Part No	UN	Qty	Description	Page No

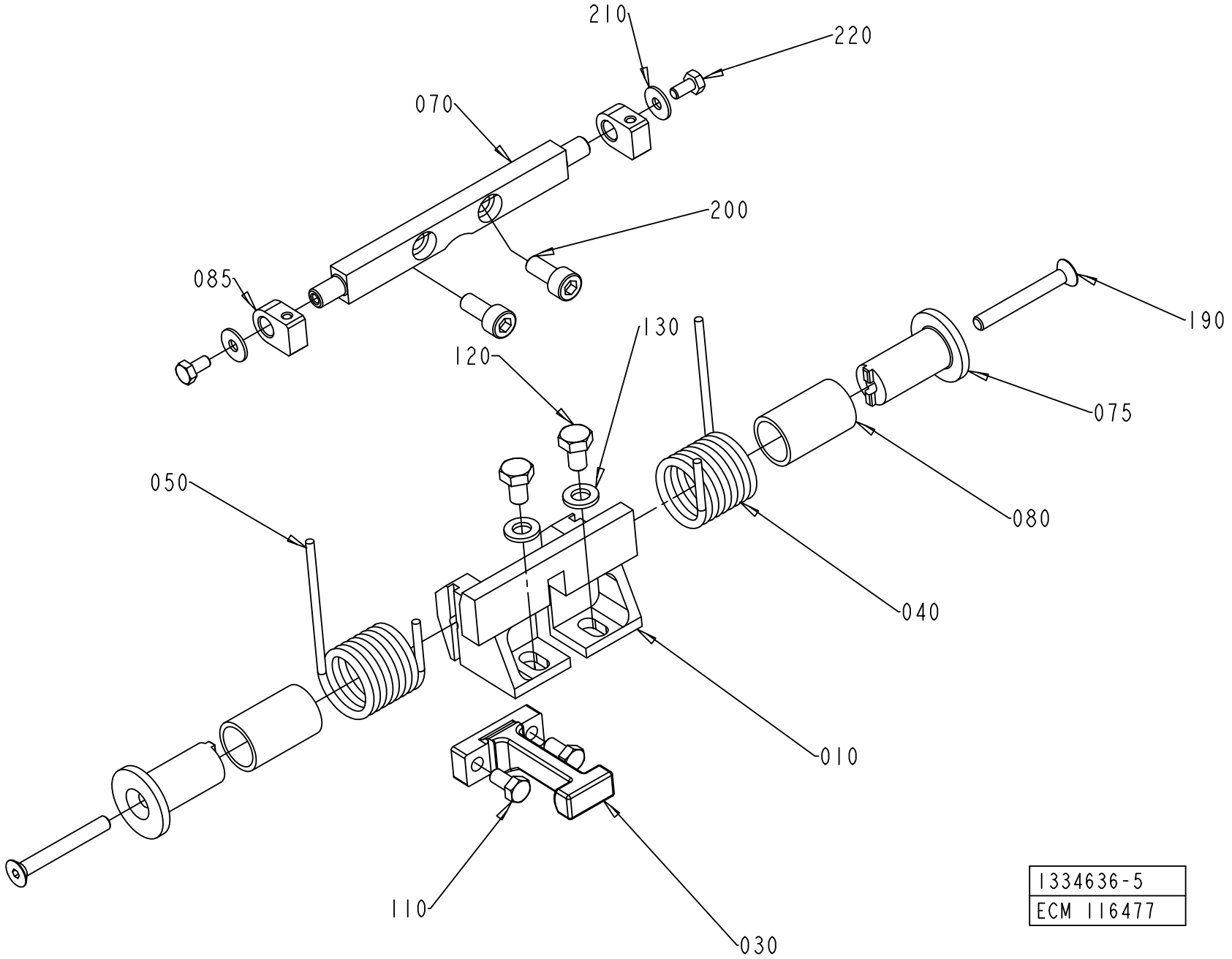
210
220
070
200
085
190
130
120
075
050
080
040
010
110
030
1334636-5
ECM 116477

ECM: 387841 - 20090403
Group number: 1334636-0200
Assembly Drawing: 1334636-5_1_AA

This list covers pages from 4-38 to 4-49

Pos	Part No	UN	Qty	Description	Page No
SEE PREVIOUS LISTS PAGES: 4-39, 4-41.					

Pos	Part No	UN	Qty	Description	Page No

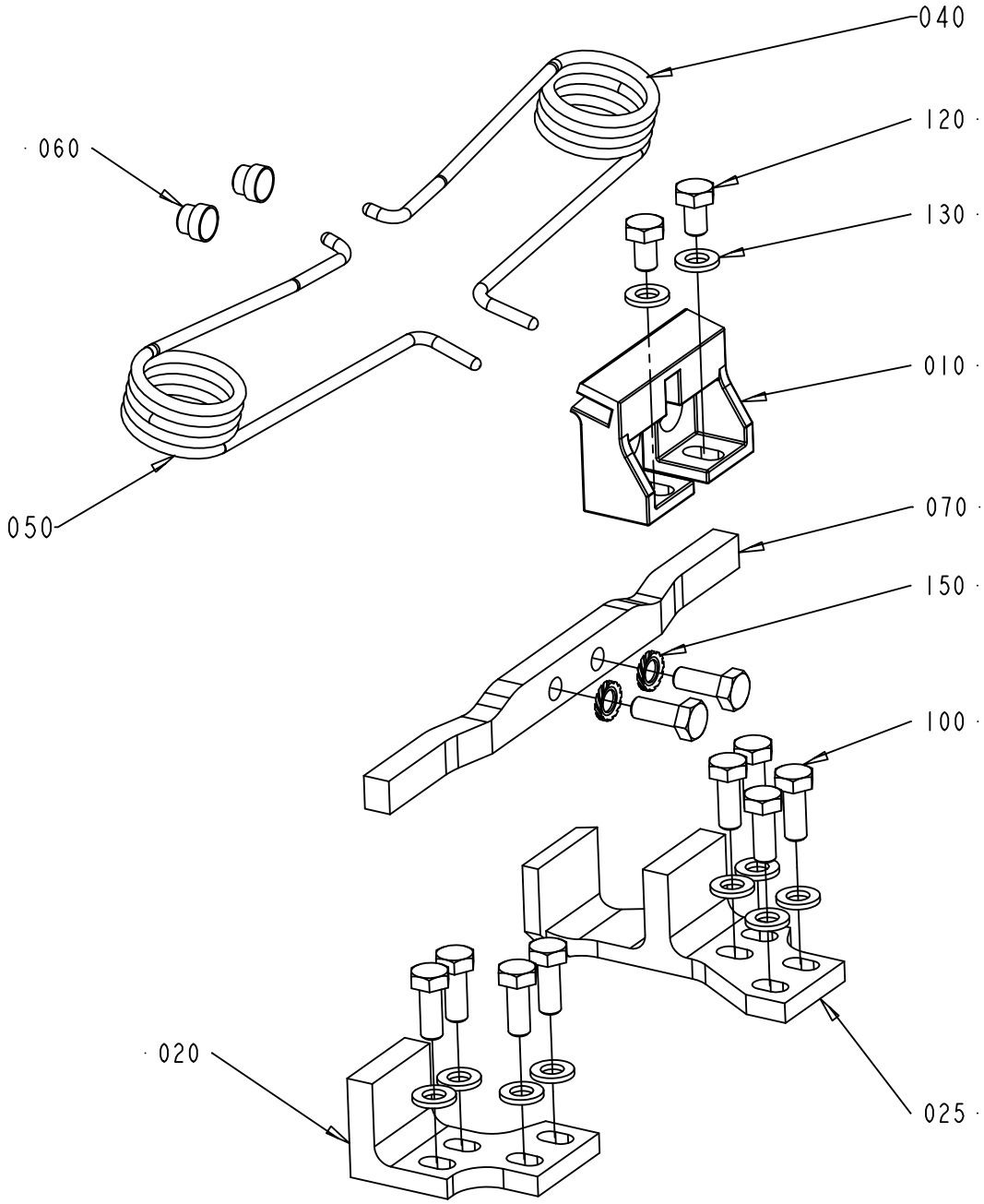

1334636-6
ECM 119888

ECM: 387841 - 20090403
Group number: 1334636-0200
Assembly Drawing: 1334636-6_1_AA

This list covers pages from 4-38 to 4-49

Pos	Part No	UN	Qty	Description	Page No
SEE PREVIOUS LISTS PAGES: 4-39, 4-41.					

Pos	Part No	UN	Qty	Description	Page No

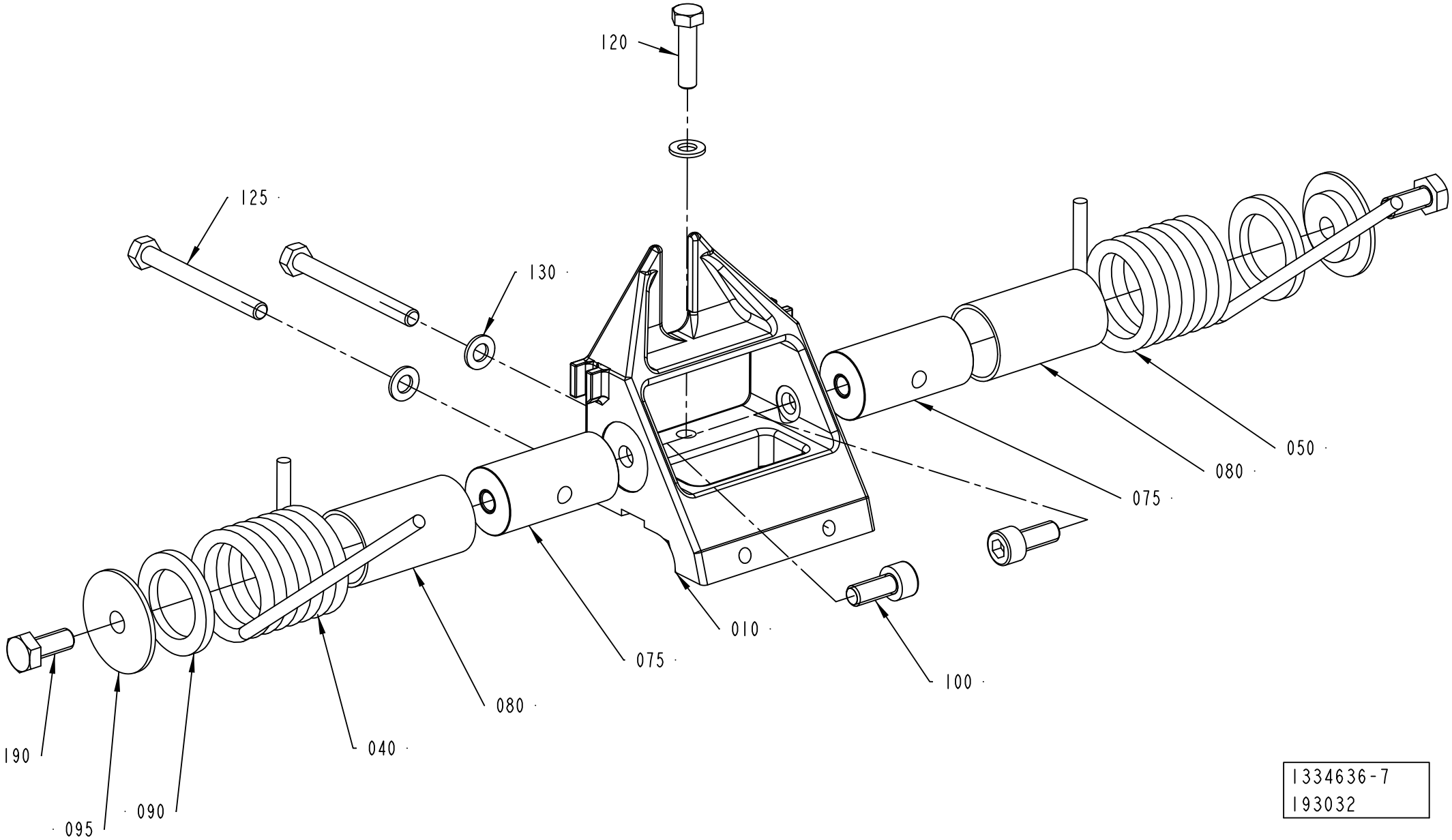

1334636-7
193032

ECM: 387841 - 20090403
Group number: 1334636-0200
Assembly Drawing: 1334636-7_1_AB

This list covers pages from 4-38 to 4-49

Pos	Part No	UN	Qty	Description	Page No
SEE PREVIOUS LISTS PAGES: 4-39, 4-41.					

Pos	Part No	UN	Qty	Description	Page No

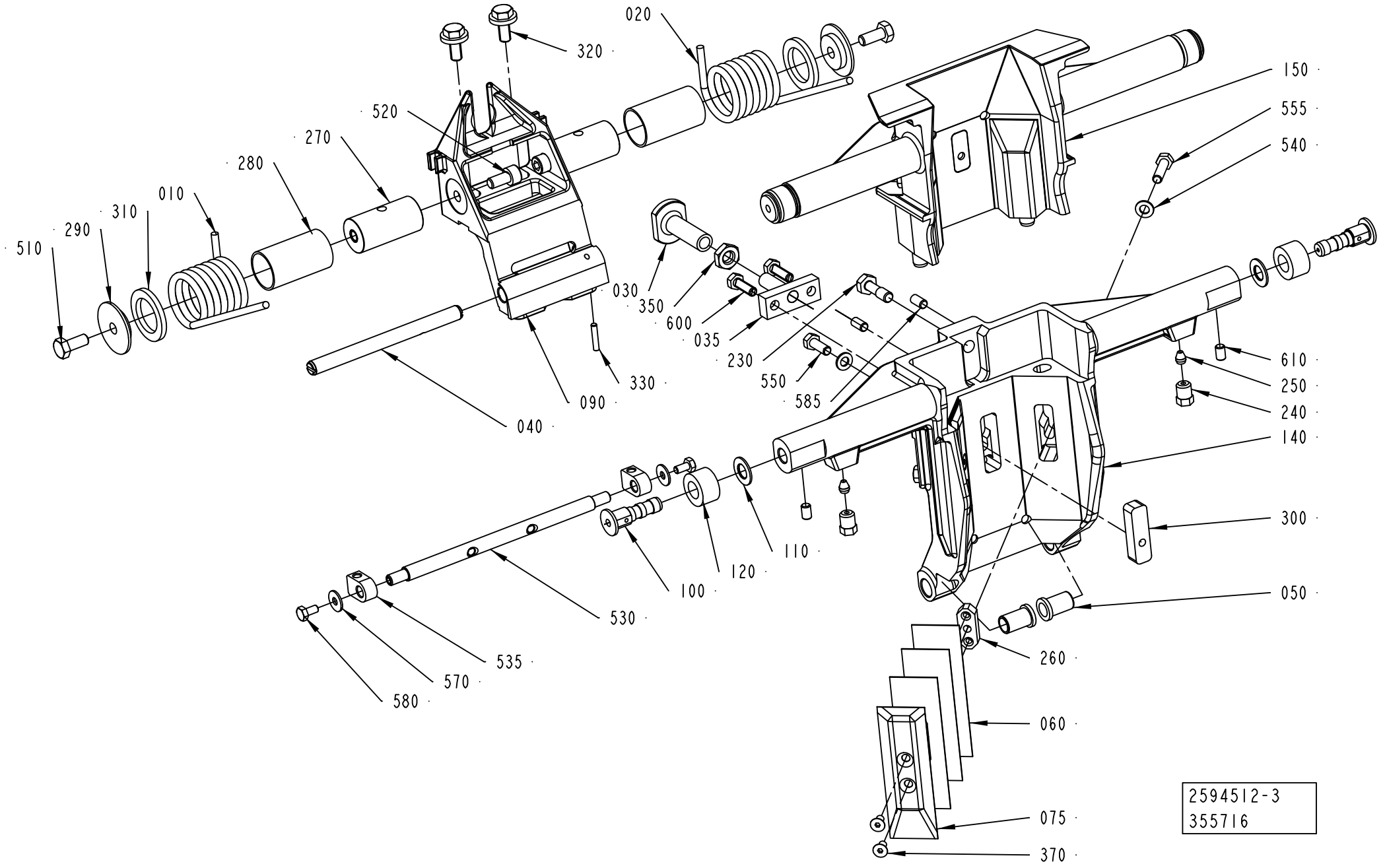
020
320
520
270
280
010
310
290
510
150
555
540
030
350
600
035
230
550
585
330
090
040
610
250
240
140
300
050
110
120
100
530
535
570
580
260
060
075
370
2594512-3
355716

ECM: 383392 - 20090402
Group number: 2594512-0200
Assembly Drawing: 2594512-3_1_AC

This list covers pages from 4-50 to 4-61

Pos	Part No	UN	Qty	Description	Page No
TBA 0200B (See drawing on page: 4-58)					
010	1350263-0000		1	SPRING RIGHT	
020	1350264-0000		1	SPRING LEFT	
030	1511339-0000		1	STOP	
040	1499327-0000		1	SHAFT	
050	2530313-0000		2	BUSHING	
063	1538637-0000		3	VOLUME SHIM	
065	1524310-0000		1	VOLUME BULGE	
070	1144601-0000		2	GUIDE STUD	
080	1499328-0000		1	STOPPER	
090	2605869-0000		1	FLAP HOLDER	
100	1512146-0000		2	AXLE PIN	
110	1512147-0000		2	WASHER	
120	1499355-0000		2	ROLLER	
130	2629237-0000		2	CAM	
140	2604493-0000		1	VOLUME FLAP	
320	312115-0366		2	SCREW ISO4762 M6X12 A4 80	
330	312318-0320		2	SCREW ISO4029 M5X5 A4	
340	312318-0323		2	SCREW ISO4029 M5X8 A4	
350	312812-0316		1	HEXAGON NUT, NY-LOCK M6 A480	
370	312155-0287		2	SCREW DIN 7991 MF6S M4X8 A4 70	
410	312155-0325		2	SCREW DIN 7991 MF6S M5X10 A4 70	
430	312115-0289		4	SCREW ISO4762 M4X10 A4 80	
500	321136-0140		2	BUSHING, 10X12X10 MM	
TBA 0200M (See drawing on page: 4-58)					
010	2771123-0000		1	SPRING	
020	2771122-0000		1	SPRING	
030	2768909-0000		1	STOP	
040	1499327-0000		1	SHAFT	
050	2530313-0000		2	BUSHING	
063	2640139-0000		3	VOLUME SHIM	
065	2640138-0000		1	VOLUME BULGE	
070	1144601-0000		2	GUIDE STUD	
080	2846670-0000		1	STOPPER	
090	2768910-0000		1	FLAP HOLDER	
100	1512146-0000		2	AXLE PIN	
110	1512147-0000		2	WASHER	
120	1499355-0000		2	ROLLER	
130	2649443-0000		2	CAM	
140	2639866-0000		1	VOLUME FLAP	
320	312115-0366		2	SCREW ISO4762 M6X12 A4 80	
330	312318-0320		2	SCREW ISO4029 M5X5 A4	
340	312318-0323		2	SCREW ISO4029 M5X8 A4	
350	312812-0318		1	HEXAGON NUT, NY-LOCK M8 A480	
370	312155-0287		2	SCREW DIN 7991 MF6S M4X8 A4 70	
410	312155-0325		2	SCREW DIN 7991 MF6S M5X10 A4 70	
430	312115-0291		4	SCREW ISO4762 M4X12 A4 80	
500	321136-0140		2	BUSHING, 10X12X10 MM	
TBA 0200SQ (See drawing on page: 4-60)					
010	2746136-0000		1	SPRING	
020	2746137-0000		1	SPRING	
030	2676934-0000		1	STOP	
040	2668315-0000		1	SHAFT	
050	2676933-0000		2	BUSHING	
063	2678717-0000		6	VOLUME SHIM	
065	2678838-0000		1	VOLUME BULGE	
070	1144601-0000		2	GUIDE STUD	
080	2773929-0000		1	STOPPER	
090	2668312-0000		1	FLAP HOLDER	
100	1512146-0000		2	AXLE PIN	
110	1512147-0000		2	WASHER	
120	1499355-0000		2	ROLLER	
130	2678713-0000		2	CAM	
140	2747138-0000		1	VOLUME FLAP	
320	312115-0366		2	SCREW ISO4762 M6X12 A4 80	
330	312318-0320		2	SCREW ISO4029 M5X5 A4	
340	312318-0320		2	SCREW ISO4029 M5X5 A4	
350	312812-0316		1	HEXAGON NUT, NY-LOCK M6 A480	
370	312155-0287		2	SCREW DIN 7991 MF6S M4X8 A4 70	
410	312155-0323		2	SCREW DIN 7991 MF6S M5X8 A4 70	
440	312115-0289		4	SCREW ISO4762 M4X10 A4 80	
500	321136-0140		2	BUSHING, 10X12X10 MM	
TBA 0250B (See drawing on page: 4-60)					
010	2771123-0000		1	SPRING	
020	2771122-0000		1	SPRING	
030	2768909-0000		1	STOP	
040	1499327-0000		1	SHAFT	
050	2530313-0000		2	BUSHING	
063	2605166-0000		4	VOLUME SHIM	
065	2609925-0000		1	VOLUME BULGE	
070	1144601-0000		2	GUIDE STUD	
080	2838351-0000		1	STOPPER	
090	2768910-0000		1	FLAP HOLDER	
100	1512146-0000		2	AXLE PIN	

Machine Type | Group Description | Used-In | Group Number | Page No

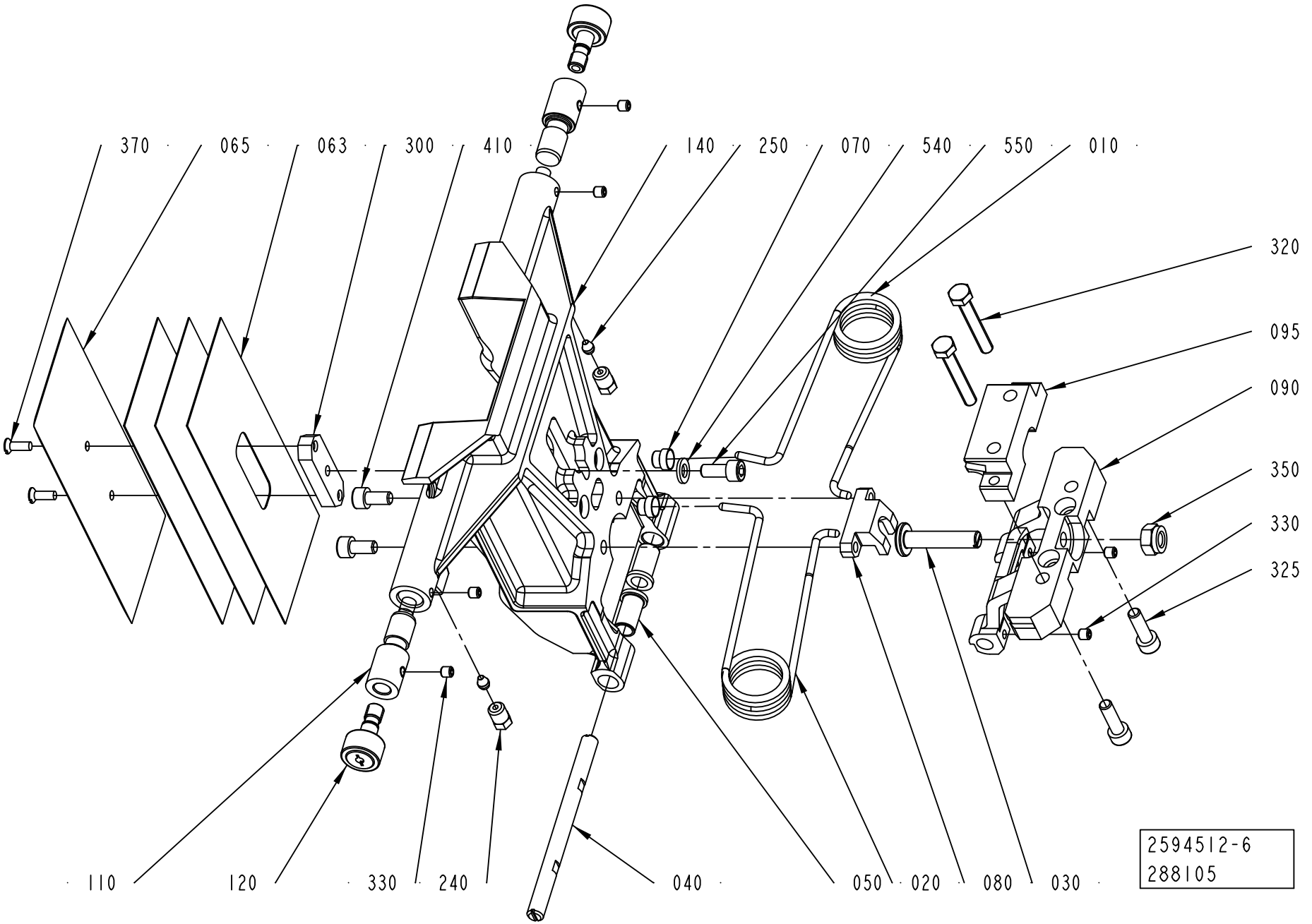
370
065
063
300
410
140
250
070
540
550
010
320
095
090
350
330
325
110
120
330
240
040
050
020
080
030
2594512-6
288105

ECM: 383392 - 20090402
Group number: 2594512-0200
Assembly Drawing: 2594512-6_1_AA

This list covers pages from 4-50 to 4-61

Pos	Part No	UN	Qty	Description	Page No
TBA 0250B (Cont'd) (See drawing on page: 4-60)					
110	1512147-0000		2	WASHER	
120	1499355-0000		2	ROLLER	
130	2606218-0000		2	CAM	
140	2605191-0000		1	VOLUME FLAP	
320	312115-0366		2	SCREW ISO4762 M6X12 A4 80	
330	312318-0320		2	SCREW ISO4029 M5X5 A4	
340	312318-0323		2	SCREW ISO4029 M5X8 A4	
350	312812-0318		1	HEXAGON NUT, NY-LOCK M8 A480	
370	312155-0287		2	SCREW DIN 7991 MF6S M4X8 A4 70	
410	312155-0327		2	SCREW DIN 7991 MF6S M5X12 A4 70	
440	312115-0287		4	SCREW ISO4762 M4X8 A4 80	
500	321136-0140		2	BUSHING, 10X12X10 MM	
TBA 0250S (See drawing on page: 4-58)					
010	2771123-0000		1	SPRING	
020	2771122-0000		1	SPRING	
030	2768909-0000		1	STOP	
040	1499327-0000		1	SHAFT	
050	2530313-0000		2	BUSHING	
063	2662169-0000		3	VOLUME SHIM	
065	2662168-0000		1	VOLUME BULGE	
070	1144601-0000		2	GUIDE STUD	
080	2768908-0000		1	STOPPER	
090	2768910-0000		1	FLAP HOLDER	
100	1512146-0000		2	AXLE PIN	
110	1512147-0000		2	WASHER	
120	1499355-0000		2	ROLLER	
130	2662431-0000		2	CAM	
140	2661451-0000		1	VOLUME FLAP	
320	312115-0366		2	SCREW ISO4762 M6X12 A4 80	
330	312318-0320		2	SCREW ISO4029 M5X5 A4	
340	312318-0323		2	SCREW ISO4029 M5X8 A4	
350	312812-0318		1	HEXAGON NUT, NY-LOCK M8 A480	
370	312155-0287		2	SCREW DIN 7991 MF6S M4X8 A4 70	
410	312155-0327		2	SCREW DIN 7991 MF6S M5X12 A4 70	
430	312115-0293		4	SCREW ISO4762 M4X16 A4 80	
500	321136-0140		2	BUSHING, 10X12X10 MM	
TBA 0250SQ (See drawing on page: 4-60)					
010	2746136-0000		1	SPRING	
020	2746137-0000		1	SPRING	
030	2839822-0000		1	STOP	
040	2668315-0000		1	SHAFT	
050	2676933-0000		2	BUSHING	
063	2678839-0000		6	VOLUME SHIM	
065	2678840-0000		1	VOLUME BULGE	
070	1144601-0000		2	GUIDE STUD	
080	2839679-0000		1	STOPPER	
090	2839678-0000		1	FLAP HOLDER	
100	1512146-0000		2	AXLE PIN	
110	1512147-0000		2	WASHER	
120	1499355-0000		2	ROLLER	
130	2678714-0000		2	CAM	
140	2747142-0000		1	VOLUME FLAP	
320	312115-0366		2	SCREW ISO4762 M6X12 A4 80	
330	312318-0320		2	SCREW ISO4029 M5X5 A4	
340	312318-0320		2	SCREW ISO4029 M5X5 A4	
350	312812-0318		1	HEXAGON NUT, NY-LOCK M8 A480	
370	312155-0287		2	SCREW DIN 7991 MF6S M4X8 A4 70	
410	312155-0323		2	SCREW DIN 7991 MF6S M5X8 A4 70	
440	312115-0289		4	SCREW ISO4762 M4X10 A4 80	
500	321136-0140		2	BUSHING, 10X12X10 MM	
TBA 0330S (See drawing on page: 4-58)					
010	2771123-0000		1	SPRING	
020	2771122-0000		1	SPRING	
030	2768909-0000		1	STOP	
040	1499327-0000		1	SHAFT	
050	2530313-0000		2	BUSHING	
063	2654290-0000		3	VOLUME SHIM	
065	979931-0000		1	VOLUME BULGE	
070	1144601-0000		2	GUIDE STUD	
080	2768908-0000		1	STOPPER	
090	2768910-0000		1	FLAP HOLDER	
100	1512146-0000		2	AXLE PIN	
110	1512147-0000		2	WASHER	
120	1499355-0000		2	ROLLER	
130	2629236-0000		2	CAM	
140	2604495-0000		1	VOLUME FLAP	
320	312115-0366		2	SCREW ISO4762 M6X12 A4 80	
330	312318-0320		2	SCREW ISO4029 M5X5 A4	
340	312318-0323		2	SCREW ISO4029 M5X8 A4	
350	312812-0318		1	HEXAGON NUT, NY-LOCK M8 A480	
370	312155-0287		2	SCREW DIN 7991 MF6S M4X8 A4 70	
410	312155-0327		2	SCREW DIN 7991 MF6S M5X12 A4 70	
430	312115-0293		4	SCREW ISO4762 M4X16 A4 80	

Machine Type | Group Description | Used-In | Group Number | Page No

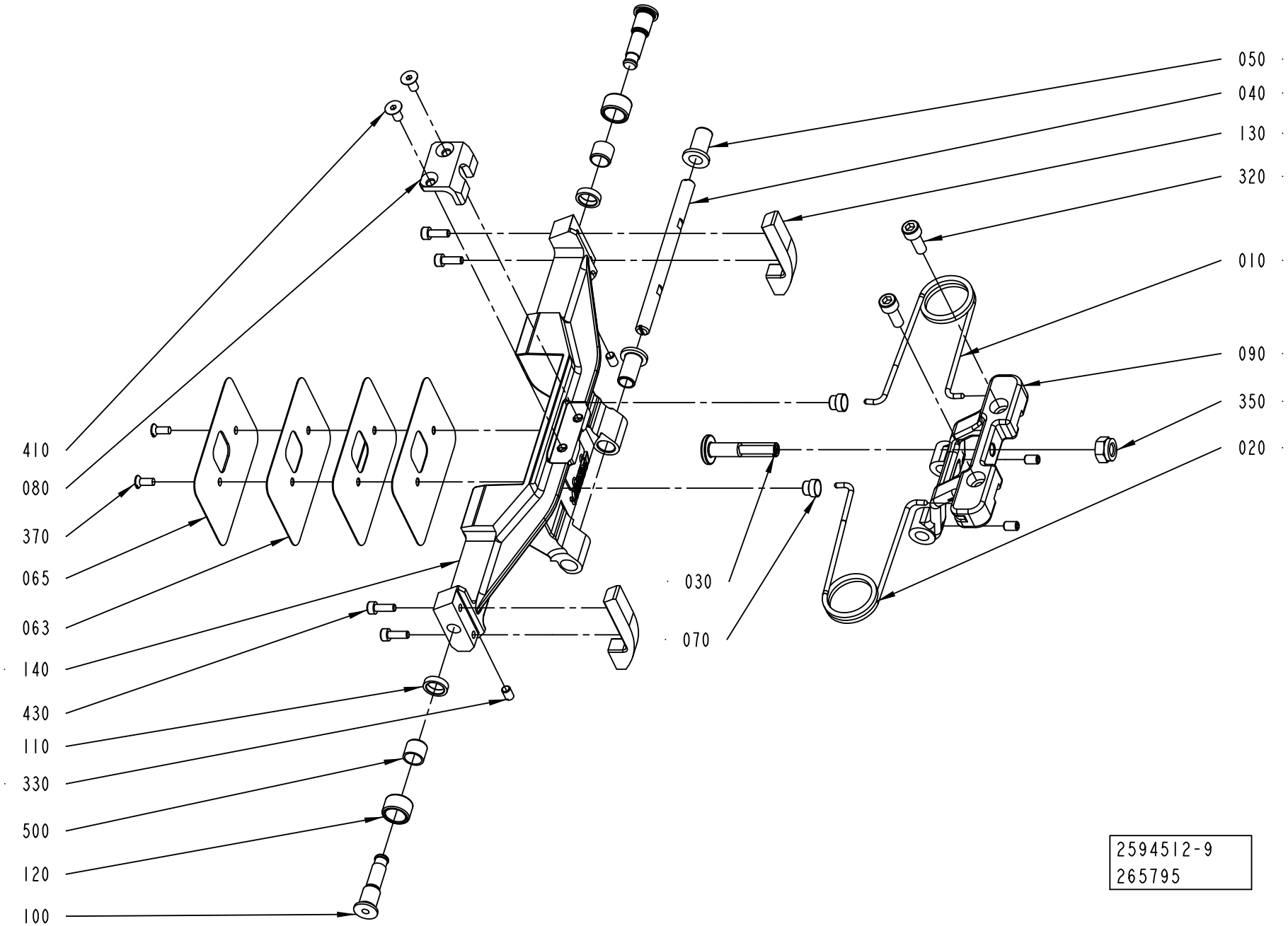
050
040
130
320
010
090
350
020
410
080
370
065
063
140
430
110
330
500
120
100
030
070
2594512-9
265795

ECM: 383392 - 20090402
Group number: 2594512-0200
Assembly Drawing: 2594512-9_1_AA

This list covers pages from 4-50 to 4-61

Pos	Part No	UN	Qty	Description	Page No
TBA 0330S (Cont'd) (See drawing on page: 4-58)					
500	321136-0140		2	BUSHING, 10X12X10 MM	
TBA 0500B (See drawing on page: 4-54)					
010	1350263-0000		1	SPRING RIGHT	
020	1350264-0000		1	SPRING LEFT	
030	2725392-0000		1	STOP	
040	1487946-0000		1	SHAFT	
050	1487948-0000		2	BUSHING	
063	2844777-0000		3	VOLUME SHIM	
065	2844776-0000		1	VOLUME BULGE	
070	1144601-0000		2	GUIDE STUD	
080	2838629-0000		1	STOPPER	
090	2838479-0000		1	FLAP HOLDER	
100	1512146-0000		2	AXLE PIN	
110	1512147-0000		2	WASHER	
120	1499355-0000		2	ROLLER	
130	1499350-0000		2	CAM	
140	2839175-0000		1	VOLUME FLAP	
320	312115-0366		2	SCREW ISO4762 M6X12 A4 80	
330	312318-0323		2	SCREW ISO4029 M5X8 A4	
340	312318-0323		2	SCREW ISO4029 M5X8 A4	
350	312812-0318		1	HEXAGON NUT, NY-LOCK M8 A480	
370	312145-0289		2	SCREW ISO 2009 MFS M4X10 A4	
410	312155-0325		2	SCREW DIN 7991 MF6S M5X10 A4 70	
430	312115-0291		4	SCREW ISO4762 M4X12 A4 80	
500	321136-0140		2	BUSHING, 10X12X10 MM	
TBA 0500SQ (See drawing on page: 4-52)					
010	2771123-0000		1	SPRING	
020	2771122-0000		1	SPRING	
030	2832350-0000		1	STOP	
040	2817789-0000		1	SHAFT	
050	2829261-0000		2	BUSHING	
063	2827055-0000		3	VOLUME SHIM	
065	2846997-0000		1	VOLUME BULGE	
070	1144601-0000		2	GUIDE STUD	
080	2826596-0000		1	STOPPER	
090	2812890-0000		1	FLAP HOLDER	
120	2846185-0000		2	ROLLER	
140	2871119-0000		1	VOLUME FLAP	
320	312115-0366		2	SCREW ISO4762 M6X12 A4 80	
330	312318-0320		2	SCREW ISO4029 M5X5 A4	
340	312318-0320		2	SCREW ISO4029 M5X5 A4	
350	312812-0318		1	HEXAGON NUT, NY-LOCK M8 A480	
370	312145-0289		2	SCREW ISO 2009 MFS M4X10 A4	
410	312155-0325		2	SCREW DIN 7991 MF6S M5X10 A4 70	
TBA 1000B (See drawing on page: 4-58)					
010	1348483-0000		1	SPRING RIGHT	
020	1348484-0000		1	SPRING LEFT	
030	2725392-0000		1	STOP	
040	1487946-0000		1	SHAFT	
050	1487948-0000		2	BUSHING	
063	1511337-0000		3	VOLUME SHIM	
065	26075-0000		1	VOLUME BULGE	
070	1144601-0000		2	GUIDE STUD	
080	2725393-0000		1	STOPPER	
090	1499345-0000		1	FLAP HOLDER	
090	2725394-0000		1	FLAP HOLDER	
100	1512146-0000		2	AXLE PIN	
110	1512147-0000		2	WASHER	
120	1499355-0000		2	ROLLER	
130	1499356-0000		2	CAM	
140	1499358-0000		1	VOLUME FLAP	
320	312115-0366		2	SCREW ISO4762 M6X12 A4 80	
330	312318-0323		2	SCREW ISO4029 M5X8 A4	
340	312318-0323		2	SCREW ISO4029 M5X8 A4	
350	312812-0318		1	HEXAGON NUT, NY-LOCK M8 A480	
370	312141-0222		2	SCREW ISO 2009 MFS M3X8 4.8 EL.PL	
410	312115-0331		1	SCREW ISO4762 M5X20 A4 80	
430	312115-0287		4	SCREW ISO4762 M4X8 A4 80	
500	321136-0140		2	BUSHING, 10X12X10 MM	
TBA 1000SQ (See drawing on page: 4-52)					
010	1143216-0000		1	SPRING	
020	1143215-0000		1	SPRING	
030	2832351-0000		1	STOP	
040	2817789-0000		1	SHAFT	
050	2829261-0000		2	BUSHING	
063	1487627-0000		3	VOLUME SHIM	
065	1487626-0000		1	VOLUME BULGE	
070	1144601-0000		2	GUIDE STUD	
080	2825378-0000		1	STOPPER	
090	2812890-0000		1	FLAP HOLDER	
095	2825377-0000		1	CANTILEVER	
110	2859597-0000		2	SPACER	
120	2846185-0000		2	ROLLER	

Machine Type | Group Description | Used-In | Group Number | Page No

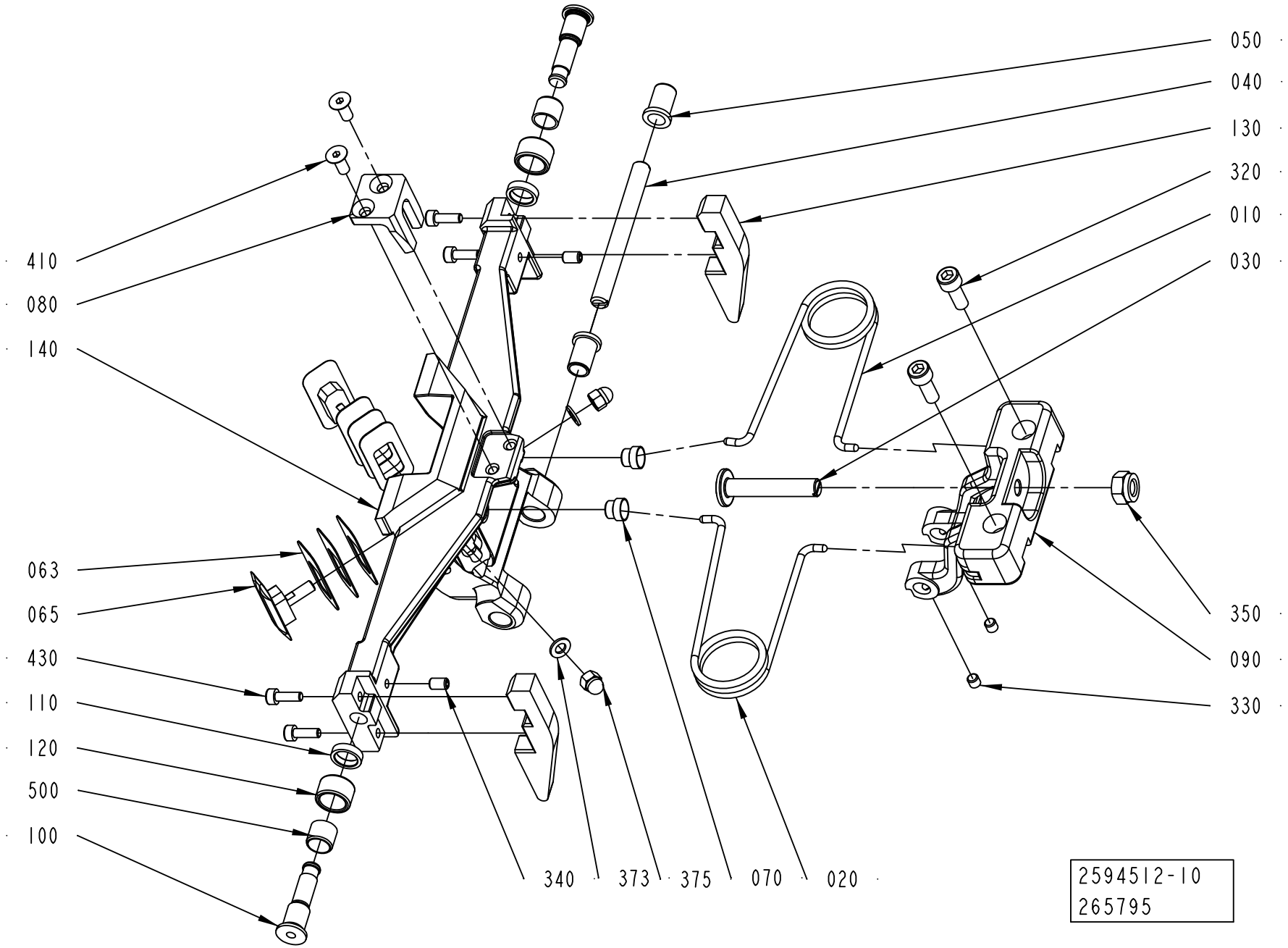
050
040
130
320
010
030
410
080
140
063
065
430
110
120
500
100
350
090
330
340
373
375
070
020
2594512-10
265795

ECM: 383392 - 20090402
Group number: 2594512-0200
Assembly Drawing: 2594512-10_1_AA

This list covers pages from 4-50 to 4-61

Pos	Part No	UN	Qty	Description	Page No
TBA 1000SQ (Cont'd) (See drawing on page: 4-52)					
140	2825375-0000		1	VOLUME FLAP	
300	1040756-0000		1	WEDGE	
320	312115-0376		2	SCREW ISO4762 M6X35 A4 80	
325	312115-0370		2	SCREW ISO4762 M6X20 A4 80	
330	312318-0320		2	SCREW ISO4029 M5X5 A4	
340	312318-0320		2	SCREW ISO4029 M5X5 A4	
350	312812-0318		1	HEXAGON NUT, NY-LOCK M8 A480	
370	312145-0291		2	SCREW ISO 2009 MFS M4X12 A4	
410	312115-0366		2	SCREW ISO4762 M6X12 A4 80	
540	315105-0153		1	WASHER BRB 6,4X12 RFR	
550	312115-0367		1	SCREW ISO4762 M6X14 A4 80	
TPA 0200SQ (See drawing on page: 4-56)					
010	2771123-0000		1	SPRING	
020	2771122-0000		1	SPRING	
030	2843006-0000		1	STOP	
040	2674327-0000		1	SHAFT	
050	2530313-0000		2	BUSHING	
063	2674328-0000		6	VOLUME SHIM	
065	2674329-0000		2	VOLUME BULGE	
070	1144601-0000		2	GUIDE STUD	
080	2839410-0000		1	STOPPER	
090	2839411-0000		1	FLAP HOLDER	
100	1512146-0000		2	AXLE PIN	
110	1512147-0000		2	WASHER	
120	1499355-0000		2	ROLLER	
130	2674326-0000		2	CAM	
140	2674332-0000		1	VOLUME FLAP	
320	312115-0366		2	SCREW ISO4762 M6X12 A4 80	
330	312318-0320		2	SCREW ISO4029 M5X5 A4	
340	312318-0323		2	SCREW ISO4029 M5X8 A4	
350	312812-0318		1	HEXAGON NUT, NY-LOCK M8 A480	
373	315105-0146		2	WASHER BRB 5,3X10 RFR	
375	312705-0314		2	NUT HEX. DOMED CAP MHM-6 M5 A280	
410	312155-0327		2	SCREW DIN 7991 MF6S M5X12 A4 70	
430	312115-0291		4	SCREW ISO4762 M4X12 A4 80	
500	321136-0140		2	BUSHING, 10X12X10 MM	
TPA 0250SQ (See drawing on page: 4-56)					
010	2771123-0000		1	SPRING	
020	2771122-0000		1	SPRING	
030	2843006-0000		1	STOP	
040	2674327-0000		1	SHAFT	
050	2530313-0000		2	BUSHING	
063	1549594-0000		6	VOLUME SHIM	
065	2581994-0000		2	VOLUME BULGE	
070	1144601-0000		2	GUIDE STUD	
080	2839410-0000		1	STOPPER	
090	2839411-0000		1	FLAP HOLDER	
100	1512146-0000		2	AXLE PIN	
110	1512147-0000		2	WASHER	
120	1499355-0000		2	ROLLER	
130	2674325-0000		2	CAM	
140	2674334-0000		1	VOLUME FLAP	
320	312115-0366		2	SCREW ISO4762 M6X12 A4 80	
330	312318-0320		2	SCREW ISO4029 M5X5 A4	
340	312318-0323		2	SCREW ISO4029 M5X8 A4	
350	312812-0318		1	HEXAGON NUT, NY-LOCK M8 A480	
373	315105-0146		2	WASHER BRB 5,3X10 RFR	
375	312705-0314		2	NUT HEX. DOMED CAP MHM-6 M5 A280	
410	312155-0327		2	SCREW DIN 7991 MF6S M5X12 A4 70	
430	312115-0291		4	SCREW ISO4762 M4X12 A4 80	
500	321136-0140		2	BUSHING, 10X12X10 MM	
TPA 1000SQ, TPA 0750SQ (See drawing on page: 4-50)					
010	2663360-0000		1	SPRING	
020	2663361-0000		1	SPRING	
030	2660400-0000		1	STOP	
035	2660401-0000		1	CATCH	
040	2658258-0000		1	SHAFT	
050	2530313-0000		2	BUSHING	
060	2660393-0000		6	VOLUME SHIM	
075	2660392-0000		2	VOLUME BULGE	
090	2658257-0000		1	FLAP HOLDER	
100	2759331-0000		2	SHAFT	
110	19972-0000		2	WASHER	
120	2993135-0000		2	ROLLER	
140	2660379-0000		1	VOLUME FLAP	
150	2705813-0100		1	VOLUME FLAP	**4-63**
230	2660391-0000		1	SCREW	
240	90134-0063		2	BUSHING/NUT M8X1, D=2,5 MM	
250	90028-0020		2	CONE TUBE 2,5MM	
260	1037734-0000		2	WEDGE	
270	2652896-0000		2	SHAFT	
280	2662167-0000		2	BUSHING	
290	2663375-0000		2	WASHER	

Machine Type | Group Description | Used-In | Group Number | Page No

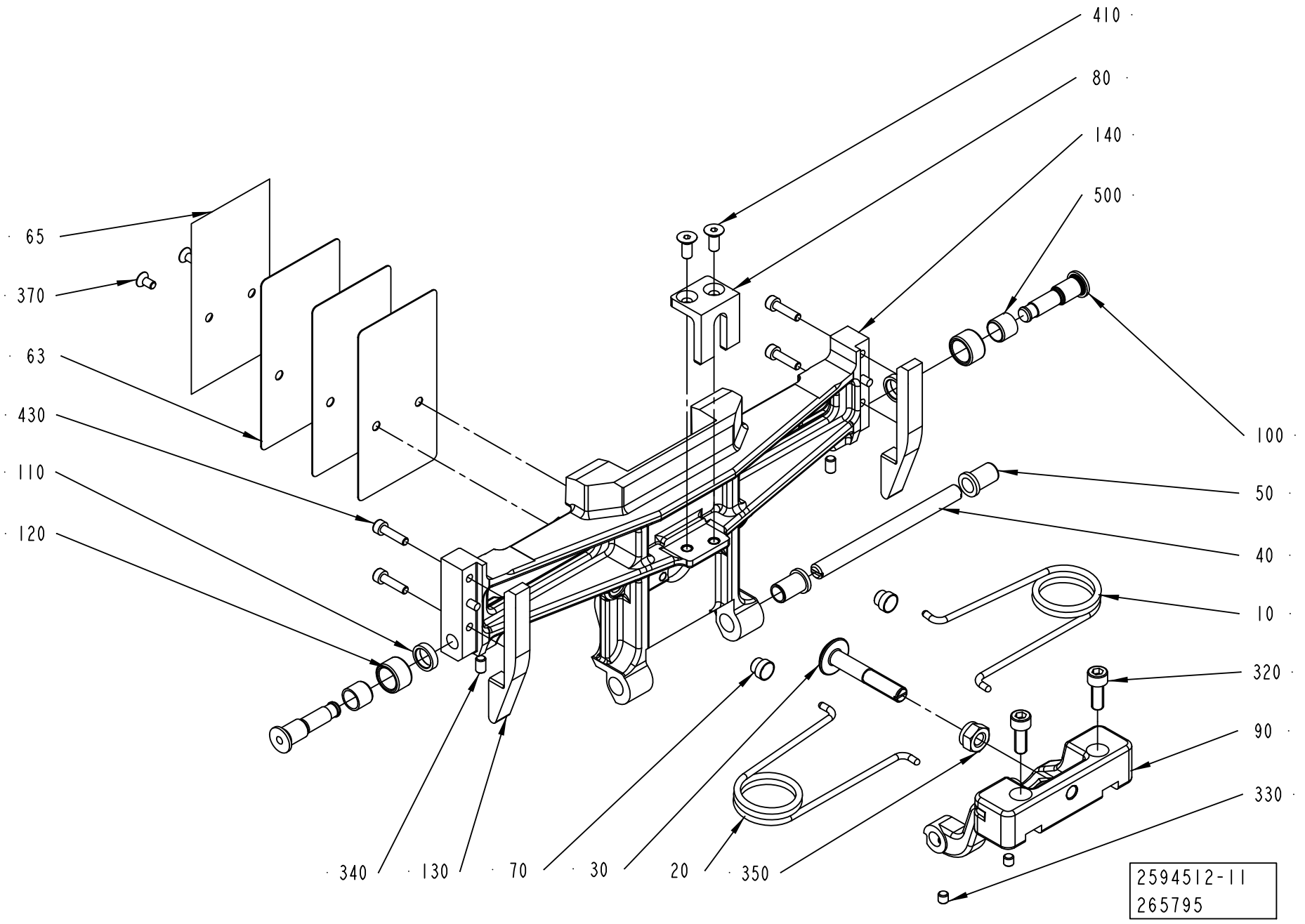
410
80
140
500
65
370
63
430
110
120
100
50
40
10
320
90
330
340
130
70
30
20
350
2594512-11
265795

Pos	Part No	UN	Qty	Description	Page No
TPA 1000SQ, TPA 0750SQ (Cont'd) (See drawing on page: 4-50)					
300	2660397-0000		1	WEDGE	
310	2663376-0000		2	WASHER	
320	2663372-0000		2	SCREW	
330	311103-0236		1	PARALLEL PIN ISO 2338 3M6X16 A1	
340	312318-0323		2	SCREW ISO4029 M5X8 A4	
350	312625-0318		1	HEXAGON THIN NUT, EN 24035 ML6M M8 A4	
370	312155-0287		4	SCREW DIN 7991 MF6S M4X8 A4 70	
510	312105-0367		2	SCREW M6S ISO 4017 M6X14 A480	
515	312318-0285		2	SCREW ISO4029 M4X6 A4	
520	312115-0366		2	SCREW ISO4762 M6X12 A4 80	
530	2566332-0000		1	SHAFT	
535	2566333-0000		2	HOLDER (STAFFA)	
540	315105-0146		3	WASHER BRB 5,3X10 RFR	
550	312105-0328		1	SCREW M6S ISO 4017 M5X14 A480	
555	312105-0331		2	SCREW M6S ISO 4017 M5X20 A480	
570	90005-0082		2	WASHER PLAIN ROUND 4,3(M4)/12,H=1	
580	312105-0287		2	SCREW M6S ISO 4017 M4X8 A470	
585	312318-0325		2	SCREW ISO4029 M5X10 A4	
600	312105-0329		2	SCREW M6S ISO 4017 M5X16 A480	
610	312318-0323		2	SCREW ISO4029 M5X8 A4	

Pos	Part No	UN	Qty	Description	Page No

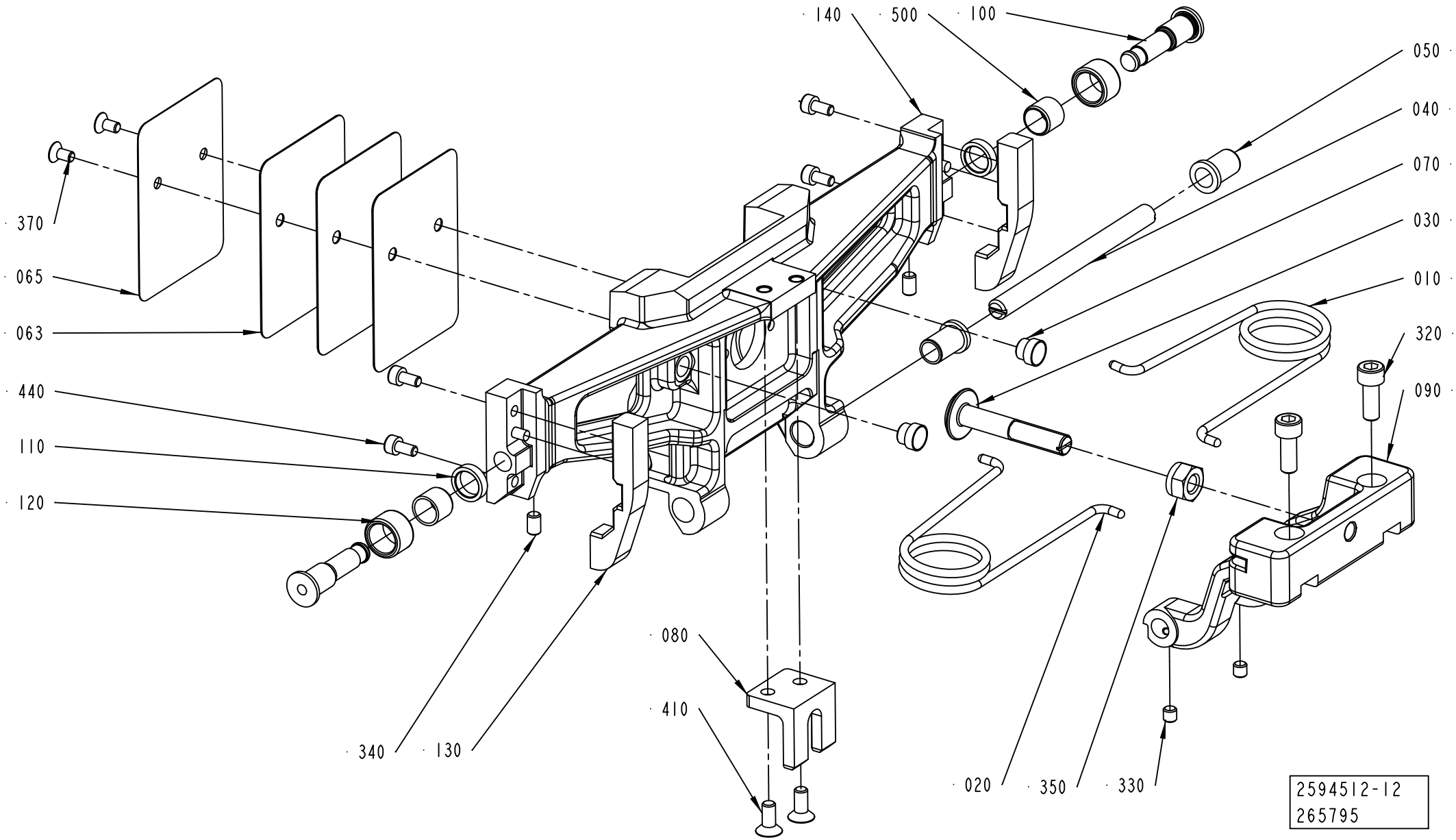
140
500
100
050
040
070
030
010
320
090
370
065
063
440
110
120
080
410
340
130
020
350
330
2594512-12
265795

ECM: 383392 - 20090402
Group number: 2594512-0200
Assembly Drawing: 2594512-12_1_AA

This list covers pages from 4-50 to 4-61

Pos	Part No	UN	Qty	Description	Page No
SEE PREVIOUS LISTS PAGES: 4-51, 4-53, 4-55, 4-57, 4-59.					

Pos	Part No	UN	Qty	Description	Page No

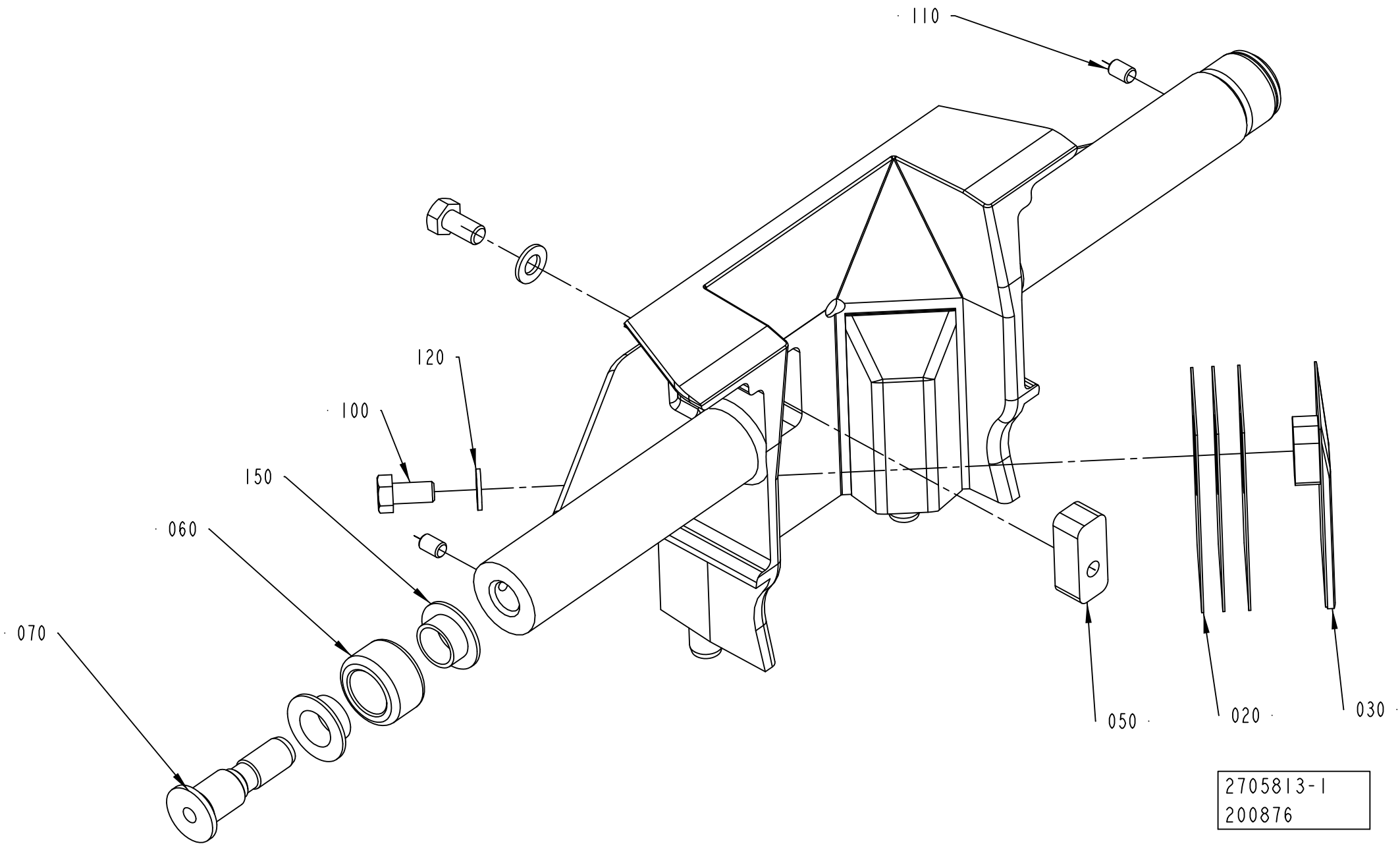
110
120
100
150
060
070
050
020
030
2705813-1
200876

ECM: 202683 - 20050402
Group number: 2705813-0100
Assembly Drawing: 2705813-1_1_AA

Pos	Part No	UN	Qty	Description	Page No
TPA 0750SQ					
010	2660384-0000		1	VOLUME FLAP	
TPA 1000SQ					
010	2660383-0000		1	VOLUME FLAP	
020	2660390-0000		6	VOLUME SHIM	
030	2660395-0000		2	VOLUME BULGE	
050	2660398-0000		1	WEDGE	
060	2660399-0000		2	ROLLER	
070	2594709-0000		2	AXLE PIN	
100	312105-0325		3	SCREW M6S ISO 4017 M5X10 A480	
110	312318-0285		2	SCREW ISO4029 M4X6 A4	
120	315105-0146		3	WASHER BRB 5,3X10 RFR	
150	90240-0289		4	FLANGE BUSHING, 10X12X6 MM	

Pos	Part No	UN	Qty	Description	Page No

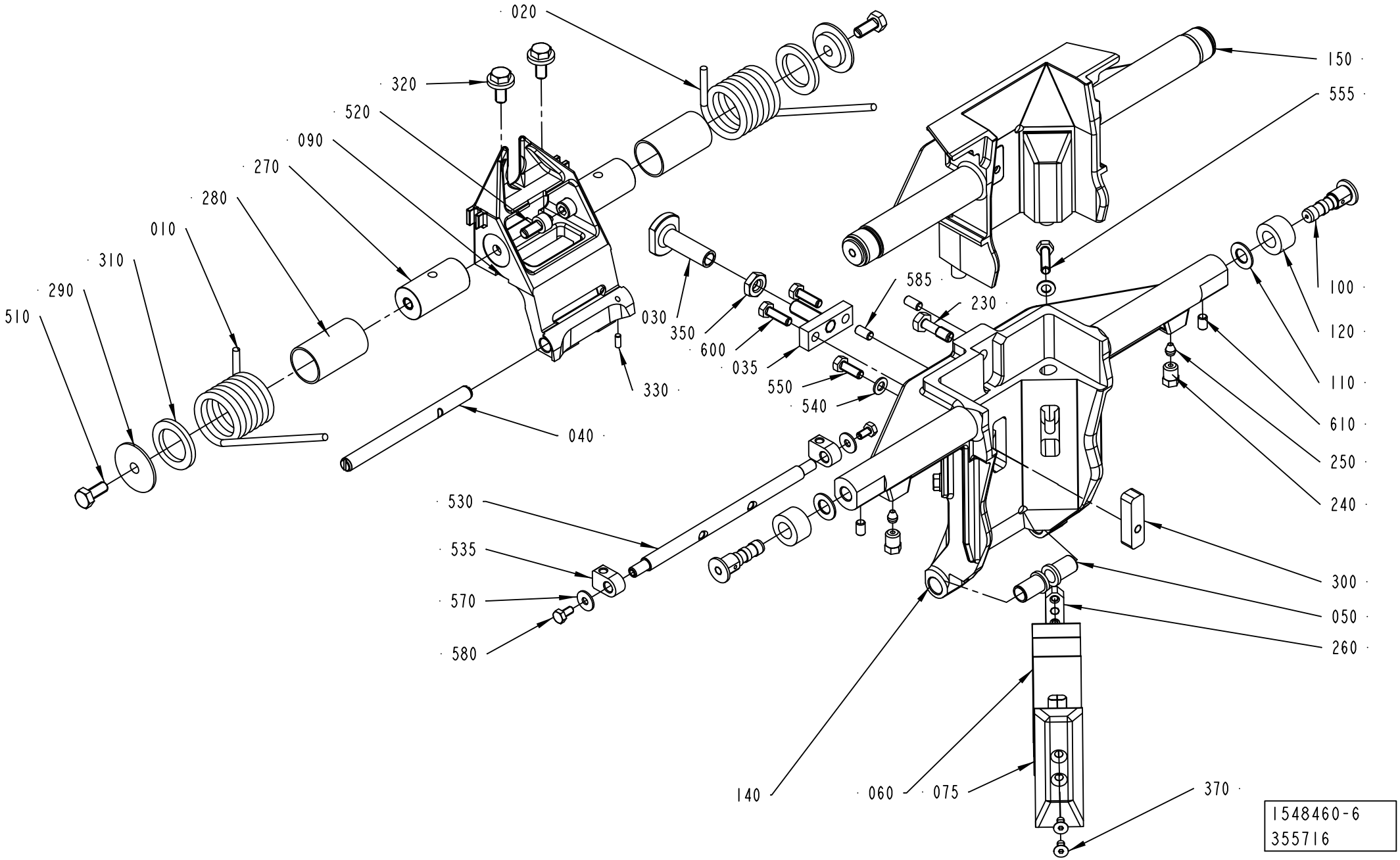
020
320
520
090
270
280
010
310
290
510
030
350
600
035
330
040
585
230
550
540
150
555
100
120
110
610
250
240
530
535
570
580
300
050
260
140
060
075
370
1548460-6
355716

ECM: 387836 - 20090403
Group number: 1548460-0200
Assembly Drawing: 1548460-6_1_AC

This list covers pages from 4-64 to 4-75

Pos	Part No	UN	Qty	Description	Page No
TBA 0200B (See drawing on page: 4-72)					
010	1350263-0000		1	SPRING RIGHT	
020	1350264-0000		1	SPRING LEFT	
030	1511339-0000		1	STOP	
040	1499327-0000		1	SHAFT	
050	2530313-0000		2	BUSHING	
063	1538637-0000		3	VOLUME SHIM	
065	1524310-0000		1	VOLUME BULGE	
070	1144601-0000		2	GUIDE STUD	
080	1499328-0000		1	STOPPER	
090	2605869-0000		1	FLAP HOLDER	
100	1512146-0000		2	AXLE PIN	
110	1512147-0000		2	WASHER	
120	1499355-0000		2	ROLLER	
130	2629237-0000		2	CAM	
140	2604494-0000		1	VOLUME FLAP	
320	312115-0366		2	SCREW ISO4762 M6X12 A4 80	
330	312318-0320		2	SCREW ISO4029 M5X5 A4	
340	312318-0323		2	SCREW ISO4029 M5X8 A4	
350	312812-0316		1	HEXAGON NUT, NY-LOCK M6 A480	
370	312155-0287		2	SCREW DIN 7991 MF6S M4X8 A4 70	
410	312155-0325		2	SCREW DIN 7991 MF6S M5X10 A4 70	
430	312115-0289		4	SCREW ISO4762 M4X10 A4 80	
500	321136-0140		2	BUSHING, 10X12X10 MM	
TBA 0200M (See drawing on page: 4-72)					
010	2771123-0000		1	SPRING	
020	2771122-0000		1	SPRING	
030	2768909-0000		1	STOP	
040	1499327-0000		1	SHAFT	
050	2530313-0000		2	BUSHING	
063	2640139-0000		3	VOLUME SHIM	
065	2640138-0000		1	VOLUME BULGE	
070	1144601-0000		2	GUIDE STUD	
080	2846670-0000		1	STOPPER	
090	2768910-0000		1	FLAP HOLDER	
100	1512146-0000		2	AXLE PIN	
110	1512147-0000		2	WASHER	
120	1499355-0000		2	ROLLER	
130	2649443-0000		2	CAM	
140	2639867-0000		1	VOLUME FLAP	
320	312115-0366		2	SCREW ISO4762 M6X12 A4 80	
330	312318-0320		2	SCREW ISO4029 M5X5 A4	
340	312318-0323		2	SCREW ISO4029 M5X8 A4	
350	312812-0318		1	HEXAGON NUT, NY-LOCK M8 A480	
370	312155-0287		2	SCREW DIN 7991 MF6S M4X8 A4 70	
410	312155-0325		2	SCREW DIN 7991 MF6S M5X10 A4 70	
430	312115-0291		4	SCREW ISO4762 M4X12 A4 80	
500	321136-0140		2	BUSHING, 10X12X10 MM	
TBA 0200SQ (See drawing on page: 4-74)					
010	2746136-0000		1	SPRING	
020	2746137-0000		1	SPRING	
030	2676934-0000		1	STOP	
040	2668315-0000		1	SHAFT	
050	2676933-0000		2	BUSHING	
063	2678717-0000		6	VOLUME SHIM	
065	2678838-0000		1	VOLUME BULGE	
070	1144601-0000		2	GUIDE STUD	
080	2773929-0000		1	STOPPER	
090	2668312-0000		1	FLAP HOLDER	
100	1512146-0000		2	AXLE PIN	
110	1512147-0000		2	WASHER	
120	1499355-0000		2	ROLLER	
130	2678713-0000		2	CAM	
140	2747138-0000		1	VOLUME FLAP	
320	312115-0366		2	SCREW ISO4762 M6X12 A4 80	
330	312318-0320		2	SCREW ISO4029 M5X5 A4	
340	312318-0320		2	SCREW ISO4029 M5X5 A4	
350	312812-0316		1	HEXAGON NUT, NY-LOCK M6 A480	
370	312155-0287		2	SCREW DIN 7991 MF6S M4X8 A4 70	
410	312155-0323		2	SCREW DIN 7991 MF6S M5X8 A4 70	
440	312115-0289		4	SCREW ISO4762 M4X10 A4 80	
500	321136-0140		2	BUSHING, 10X12X10 MM	
TBA 0250B (See drawing on page: 4-74)					
010	2771123-0000		1	SPRING	
020	2771122-0000		1	SPRING	
030	2768909-0000		1	STOP	
040	1499327-0000		1	SHAFT	
050	2530313-0000		2	BUSHING	
063	2605166-0000		4	VOLUME SHIM	
065	2609925-0000		1	VOLUME BULGE	
070	1144601-0000		2	GUIDE STUD	
080	2838351-0000		1	STOPPER	
090	2768910-0000		1	FLAP HOLDER	
100	1512146-0000		2	AXLE PIN	

Machine Type | Group Description | Used-In | Group Number | Page No

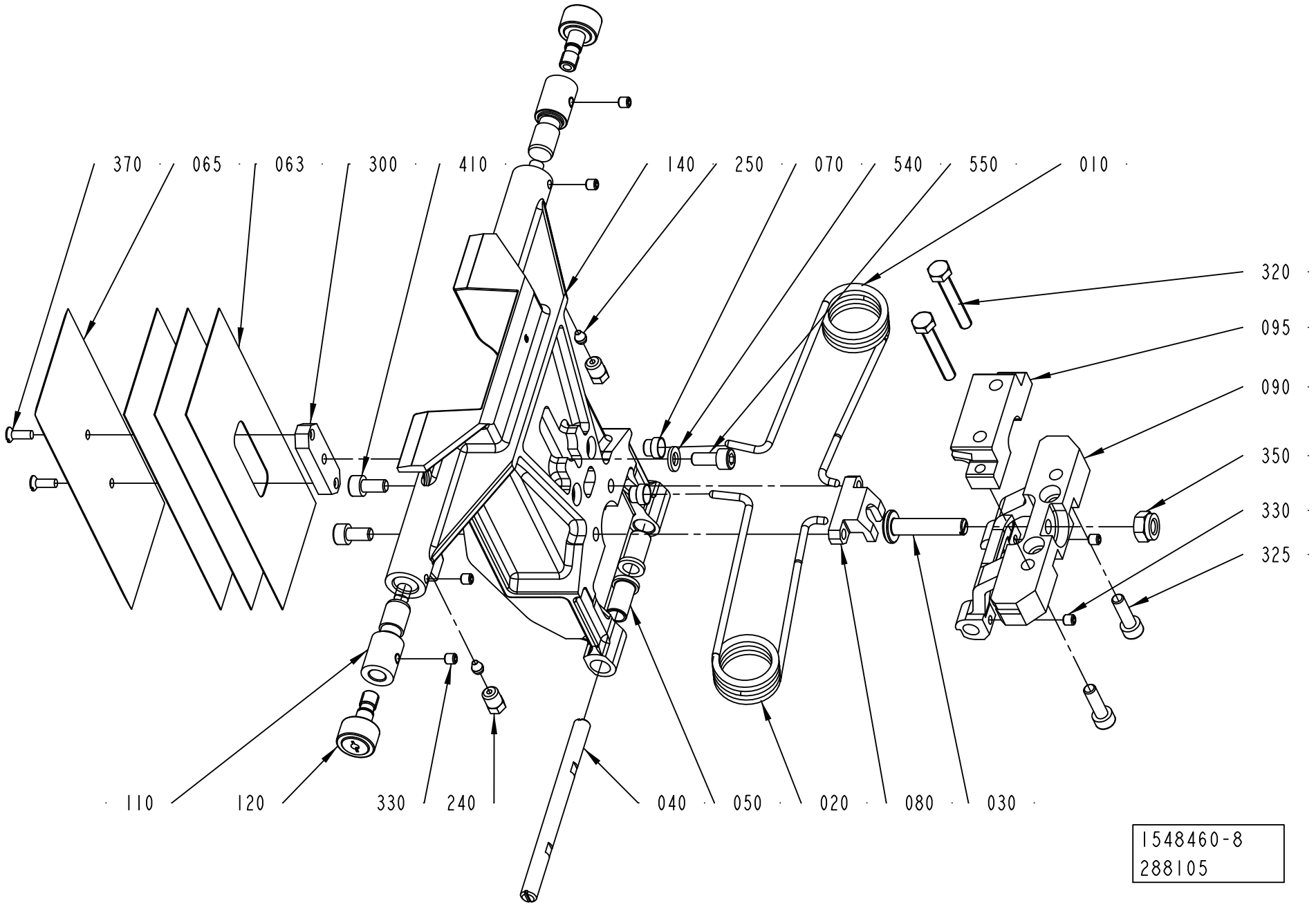
370
065
063
300
410
140
250
070
540
550
010
320
095
090
350
330
325
110
120
330
240
040
050
020
080
030
1548460-8
288105

ECM: 387836 - 20090403
Group number: 1548460-0200
Assembly Drawing: 1548460-8_1_AA

This list covers pages from 4-64 to 4-75

Pos	Part No	UN	Qty	Description	Page No
TBA 0250B (Cont'd) (See drawing on page: 4-74)					
110	1512147-0000		2	WASHER	
120	1499355-0000		2	ROLLER	
130	2606218-0000		2	CAM	
140	2605192-0000		1	VOLUME FLAP	
320	312115-0366		2	SCREW ISO4762 M6X12 A4 80	
330	312318-0320		2	SCREW ISO4029 M5X5 A4	
340	312318-0323		2	SCREW ISO4029 M5X8 A4	
350	312812-0318		1	HEXAGON NUT, NY-LOCK M8 A480	
370	312155-0287		2	SCREW DIN 7991 MF6S M4X8 A4 70	
410	312155-0327		2	SCREW DIN 7991 MF6S M5X12 A4 70	
440	312115-0287		4	SCREW ISO4762 M4X8 A4 80	
500	321136-0140		2	BUSHING, 10X12X10 MM	
TBA 0250S (See drawing on page: 4-72)					
010	2771123-0000		1	SPRING	
020	2771122-0000		1	SPRING	
030	2768909-0000		1	STOP	
040	1499327-0000		1	SHAFT	
050	2530313-0000		2	BUSHING	
063	2662169-0000		3	VOLUME SHIM	
065	2662168-0000		1	VOLUME BULGE	
070	1144601-0000		2	GUIDE STUD	
080	2768908-0000		1	STOPPER	
090	2768910-0000		1	FLAP HOLDER	
100	1512146-0000		2	AXLE PIN	
110	1512147-0000		2	WASHER	
120	1499355-0000		2	ROLLER	
130	2662431-0000		2	CAM	
140	2661450-0000		1	VOLUME FLAP	
320	312115-0366		2	SCREW ISO4762 M6X12 A4 80	
330	312318-0320		2	SCREW ISO4029 M5X5 A4	
340	312318-0323		2	SCREW ISO4029 M5X8 A4	
350	312812-0318		1	HEXAGON NUT, NY-LOCK M8 A480	
370	312155-0287		2	SCREW DIN 7991 MF6S M4X8 A4 70	
410	312155-0327		2	SCREW DIN 7991 MF6S M5X12 A4 70	
430	312115-0293		4	SCREW ISO4762 M4X16 A4 80	
500	321136-0140		2	BUSHING, 10X12X10 MM	
TBA 0250SQ (See drawing on page: 4-74)					
010	2746136-0000		1	SPRING	
020	2746137-0000		1	SPRING	
030	2839822-0000		1	STOP	
040	2668315-0000		1	SHAFT	
050	2676933-0000		2	BUSHING	
063	2678839-0000		6	VOLUME SHIM	
065	2678840-0000		1	VOLUME BULGE	
070	1144601-0000		2	GUIDE STUD	
080	2839679-0000		1	STOPPER	
090	2839678-0000		1	FLAP HOLDER	
100	1512146-0000		2	AXLE PIN	
110	1512147-0000		2	WASHER	
120	1499355-0000		2	ROLLER	
130	2678714-0000		2	CAM	
140	2747142-0000		1	VOLUME FLAP	
320	312115-0366		2	SCREW ISO4762 M6X12 A4 80	
330	312318-0320		2	SCREW ISO4029 M5X5 A4	
340	312318-0320		2	SCREW ISO4029 M5X5 A4	
350	312812-0318		1	HEXAGON NUT, NY-LOCK M8 A480	
370	312155-0287		2	SCREW DIN 7991 MF6S M4X8 A4 70	
410	312155-0323		2	SCREW DIN 7991 MF6S M5X8 A4 70	
440	312115-0289		4	SCREW ISO4762 M4X10 A4 80	
500	321136-0140		2	BUSHING, 10X12X10 MM	
TBA 0330S (See drawing on page: 4-72)					
010	2771123-0000		1	SPRING	
020	2771122-0000		1	SPRING	
030	2768909-0000		1	STOP	
040	1499327-0000		1	SHAFT	
050	2530313-0000		2	BUSHING	
063	2654290-0000		3	VOLUME SHIM	
065	979931-0000		1	VOLUME BULGE	
070	1144601-0000		2	GUIDE STUD	
080	2768908-0000		1	STOPPER	
090	2768910-0000		1	FLAP HOLDER	
100	1512146-0000		2	AXLE PIN	
110	1512147-0000		2	WASHER	
120	1499355-0000		2	ROLLER	
130	2629236-0000		2	CAM	
140	2604496-0000		1	VOLUME FLAP	
320	312115-0366		2	SCREW ISO4762 M6X12 A4 80	
330	312318-0320		2	SCREW ISO4029 M5X5 A4	
340	312318-0323		2	SCREW ISO4029 M5X8 A4	
350	312812-0318		1	HEXAGON NUT, NY-LOCK M8 A480	
370	312155-0287		2	SCREW DIN 7991 MF6S M4X8 A4 70	
410	312155-0327		2	SCREW DIN 7991 MF6S M5X12 A4 70	
430	312115-0293		4	SCREW ISO4762 M4X16 A4 80	

Machine Type | Group Description | Used-In | Group Number | Page No

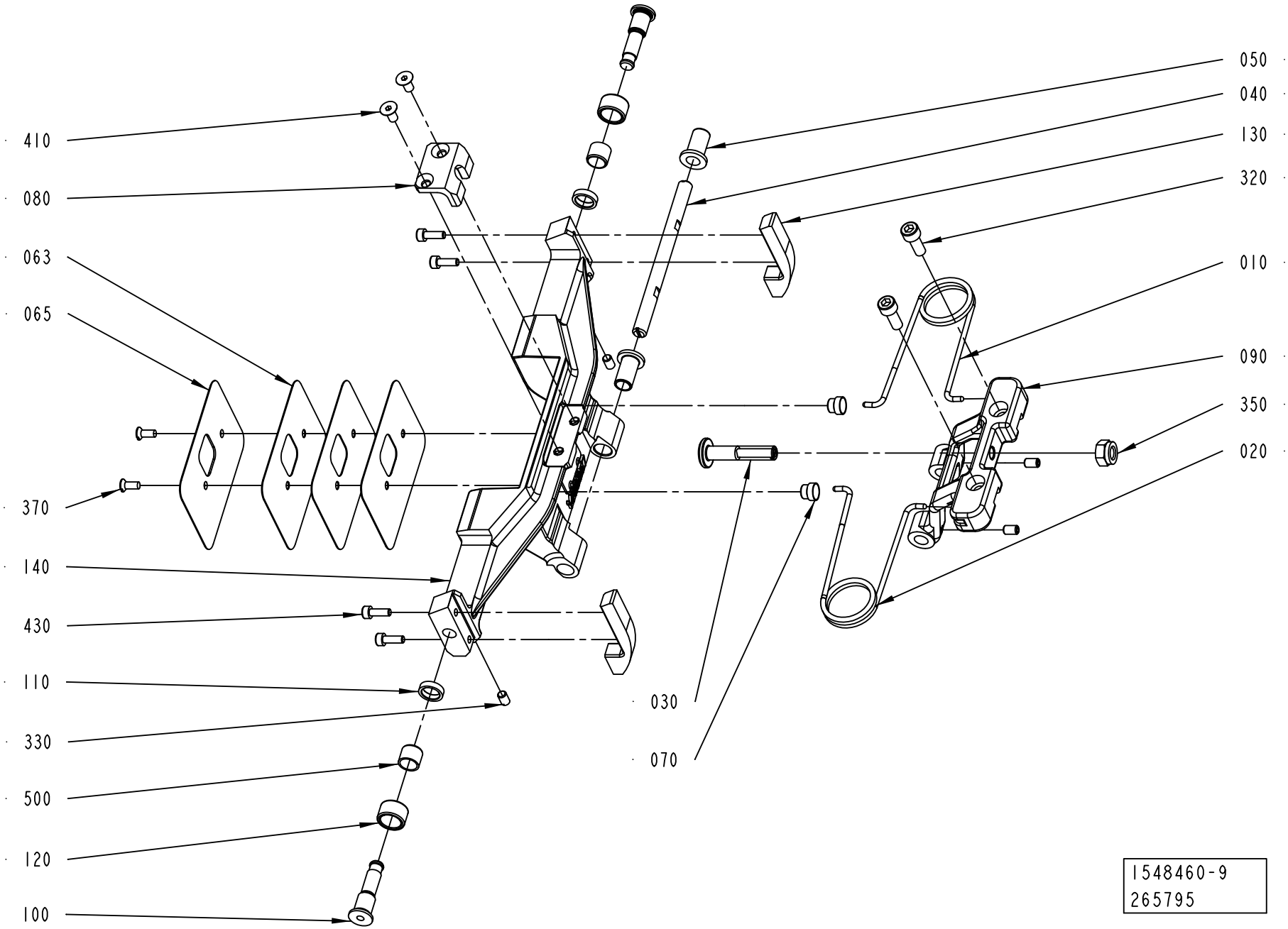
410
080
063
065
370
140
430
110
330
500
120
100
050
040
130
320
010
090
350
020
030
070
1548460-9
265795

ECM: 387836 - 20090403
Group number: 1548460-0200
Assembly Drawing: 1548460-9_1_AA

This list covers pages from 4-64 to 4-75

Pos	Part No	UN	Qty	Description	Page No
TBA 0330S (Cont'd) (See drawing on page: 4-72)					
500	321136-0140		2	BUSHING, 10X12X10 MM	
TBA 0500B (See drawing on page: 4-68)					
010	1350263-0000		1	SPRING RIGHT	
020	1350264-0000		1	SPRING LEFT	
030	2725392-0000		1	STOP	
040	1487946-0000		1	SHAFT	
050	1487948-0000		2	BUSHING	
063	2844777-0000		3	VOLUME SHIM	
065	2844776-0000		1	VOLUME BULGE	
070	1144601-0000		2	GUIDE STUD	
080	2838629-0000		1	STOPPER	
090	2838479-0000		1	FLAP HOLDER	
100	1512146-0000		2	AXLE PIN	
110	1512147-0000		2	WASHER	
120	1499355-0000		2	ROLLER	
130	1499350-0000		2	CAM	
140	2839175-0000		1	VOLUME FLAP	
320	312115-0366		2	SCREW ISO4762 M6X12 A4 80	
330	312318-0323		2	SCREW ISO4029 M5X8 A4	
340	312318-0323		2	SCREW ISO4029 M5X8 A4	
350	312812-0318		1	HEXAGON NUT, NY-LOCK M8 A480	
370	312145-0289		2	SCREW ISO 2009 MFS M4X10 A4	
410	312155-0325		2	SCREW DIN 7991 MF6S M5X10 A4 70	
430	312115-0291		4	SCREW ISO4762 M4X12 A4 80	
500	321136-0140		2	BUSHING, 10X12X10 MM	
TBA 0500SQ (See drawing on page: 4-66)					
010	2771123-0000		1	SPRING	
020	2771122-0000		1	SPRING	
030	2832350-0000		1	STOP	
040	2817789-0000		1	SHAFT	
050	2829261-0000		2	BUSHING	
063	2827055-0000		3	VOLUME SHIM	
065	2846997-0000		1	VOLUME BULGE	
070	1144601-0000		2	GUIDE STUD	
080	2826596-0000		1	STOPPER	
090	2812890-0000		1	FLAP HOLDER	
120	2846185-0000		2	ROLLER	
140	2871119-0000		1	VOLUME FLAP	
240	90134-0063		2	BUSHING/NUT M8X1, D=2,5 MM	
250	90028-0020		2	CONE TUBE 2,5MM	
320	312115-0366		2	SCREW ISO4762 M6X12 A4 80	
330	312318-0320		2	SCREW ISO4029 M5X5 A4	
340	312318-0323		2	SCREW ISO4029 M5X8 A4	
350	312812-0318		1	HEXAGON NUT, NY-LOCK M8 A480	
370	312145-0289		2	SCREW ISO 2009 MFS M4X10 A4	
410	312155-0325		2	SCREW DIN 7991 MF6S M5X10 A4 70	
TBA 1000B (See drawing on page: 4-72)					
010	1348483-0000		1	SPRING RIGHT	
020	1348484-0000		1	SPRING LEFT	
030	2725392-0000		1	STOP	
040	1487946-0000		1	SHAFT	
050	1487948-0000		2	BUSHING	
063	1511337-0000		3	VOLUME SHIM	
065	26075-0000		1	VOLUME BULGE	
070	1144601-0000		2	GUIDE STUD	
080	2725393-0000		1	STOPPER	
090	2725394-0000		1	FLAP HOLDER	
100	1512146-0000		2	AXLE PIN	
110	1512147-0000		2	WASHER	
120	1499355-0000		2	ROLLER	
130	1499356-0000		2	CAM	
140	1499358-0000		1	VOLUME FLAP	
320	312115-0366		2	SCREW ISO4762 M6X12 A4 80	
330	312318-0323		2	SCREW ISO4029 M5X8 A4	
340	312318-0323		2	SCREW ISO4029 M5X8 A4	
350	312812-0318		1	HEXAGON NUT, NY-LOCK M8 A480	
370	312141-0222		2	SCREW ISO 2009 MFS M3X8 4.8 EL.PL	
410	312115-0331		1	SCREW ISO4762 M5X20 A4 80	
430	312115-0287		4	SCREW ISO4762 M4X8 A4 80	
500	321136-0140		2	BUSHING, 10X12X10 MM	
TBA 1000SQ (See drawing on page: 4-66)					
010	1143216-0000		1	SPRING	
020	1143215-0000		1	SPRING	
030	2832351-0000		1	STOP	
040	2817789-0000		1	SHAFT	
050	2829261-0000		2	BUSHING	
063	1487627-0000		3	VOLUME SHIM	
065	1487626-0000		1	VOLUME BULGE	
070	1144601-0000		2	GUIDE STUD	
080	2825378-0000		1	STOPPER	
090	2812890-0000		1	FLAP HOLDER	
095	2825377-0000		1	CANTILEVER	
110	2859597-0000		2	SPACER	

Machine Type | Group Description | Used-In | Group Number | Page No

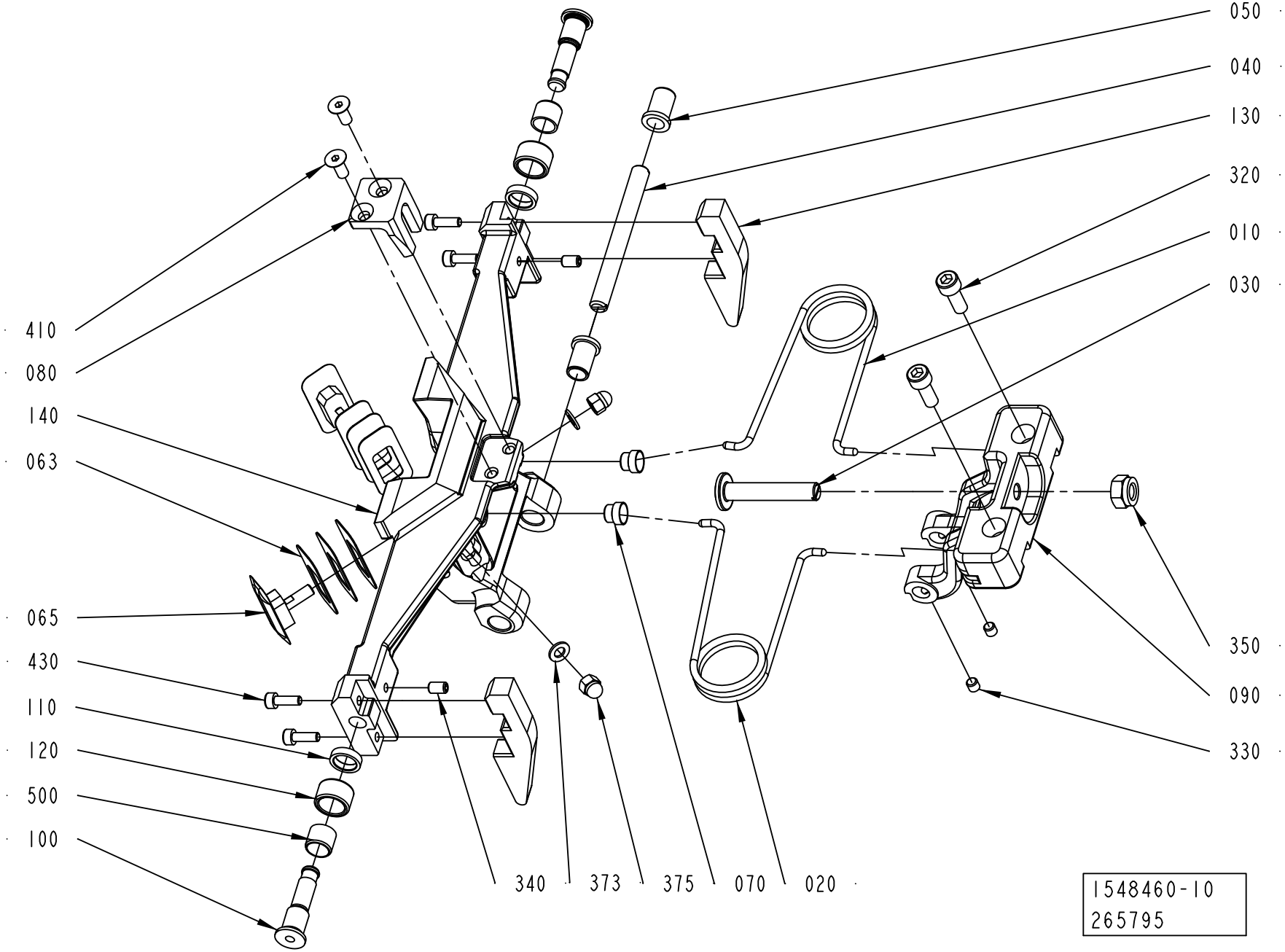
050
040
130
320
010
030
410
080
140
063
065
430
110
120
500
100
350
090
330
340
373
375
070
020
1548460-10
265795

Pos	Part No	UN	Qty	Description	Page No
TBA 1000SQ (Cont'd) (See drawing on page: 4-66)					
120	2846185-0000		2	ROLLER	
140	2825376-0000		1	VOLUME FLAP	
240	90134-0063		2	BUSHING/NUT M8X1, D=2,5 MM	
250	90028-0020		2	CONE TUBE 2,5MM	
300	1040756-0000		1	WEDGE	
320	312115-0376		2	SCREW ISO4762 M6X35 A4 80	
325	312115-0370		2	SCREW ISO4762 M6X20 A4 80	
330	312318-0320		2	SCREW ISO4029 M5X5 A4	
340	312318-0320		4	SCREW ISO4029 M5X5 A4	
350	312812-0318		1	HEXAGON NUT, NY-LOCK M8 A480	
370	312145-0291		2	SCREW ISO 2009 MFS M4X12 A4	
410	312115-0366		2	SCREW ISO4762 M6X12 A4 80	
540	315105-0153		1	WASHER BRB 6,4X12 RFR	
550	312115-0367		1	SCREW ISO4762 M6X14 A4 80	
TPA 0200SQ (See drawing on page: 4-70)					
010	2771123-0000		1	SPRING	
020	2771122-0000		1	SPRING	
030	2843006-0000		1	STOP	
040	2674327-0000		1	SHAFT	
050	2530313-0000		2	BUSHING	
063	2674328-0000		6	VOLUME SHIM	
065	2674329-0000		2	VOLUME BULGE	
070	1144601-0000		2	GUIDE STUD	
080	2839410-0000		1	STOPPER	
090	2839411-0000		1	FLAP HOLDER	
100	1512146-0000		2	AXLE PIN	
110	1512147-0000		2	WASHER	
120	1499355-0000		2	ROLLER	
130	2674326-0000		2	CAM	
140	2674331-0000		1	VOLUME FLAP	
320	312115-0366		2	SCREW ISO4762 M6X12 A4 80	
330	312318-0320		2	SCREW ISO4029 M5X5 A4	
340	312318-0323		2	SCREW ISO4029 M5X8 A4	
350	312812-0318		1	HEXAGON NUT, NY-LOCK M8 A480	
373	315105-0146		2	WASHER BRB 5,3X10 RFR	
375	312705-0314		2	NUT HEX. DOMED CAP MHM-6 M5 A280	
410	312155-0327		2	SCREW DIN 7991 MF6S M5X12 A4 70	
430	312115-0291		4	SCREW ISO4762 M4X12 A4 80	
500	321136-0140		2	BUSHING, 10X12X10 MM	
TPA 0250SQ (See drawing on page: 4-70)					
010	2771123-0000		1	SPRING	
020	2771122-0000		1	SPRING	
030	2843006-0000		1	STOP	
040	2674327-0000		1	SHAFT	
050	2530313-0000		2	BUSHING	
063	1549594-0000		6	VOLUME SHIM	
065	2581994-0000		2	VOLUME BULGE	
070	1144601-0000		2	GUIDE STUD	
080	2839410-0000		1	STOPPER	
090	2839411-0000		1	FLAP HOLDER	
100	1512146-0000		2	AXLE PIN	
110	1512147-0000		2	WASHER	
120	1499355-0000		2	ROLLER	
130	2674325-0000		2	CAM	
140	2674333-0000		1	VOLUME FLAP	
320	312115-0366		2	SCREW ISO4762 M6X12 A4 80	
330	312318-0320		2	SCREW ISO4029 M5X5 A4	
340	312318-0323		2	SCREW ISO4029 M5X8 A4	
350	312812-0318		1	HEXAGON NUT, NY-LOCK M8 A480	
373	315105-0146		2	WASHER BRB 5,3X10 RFR	
375	312705-0314		2	NUT HEX. DOMED CAP MHM-6 M5 A280	
410	312155-0327		2	SCREW DIN 7991 MF6S M5X12 A4 70	
430	312115-0291		4	SCREW ISO4762 M4X12 A4 80	
500	321136-0140		2	BUSHING, 10X12X10 MM	
TPA 1000SQ, TPA 0750SQ (See drawing on page: 4-64)					
010	2663360-0000		1	SPRING	
020	2663361-0000		1	SPRING	
030	2660400-0000		1	STOP	
035	2660401-0000		1	CATCH	
040	2658258-0000		1	SHAFT	
050	2530313-0000		2	BUSHING	
060	2660393-0000		6	VOLUME SHIM	
075	2660392-0000		2	VOLUME BULGE	
090	2658256-0000		1	FLAP HOLDER	
100	2759331-0000		2	SHAFT	
110	19972-0000		2	WASHER	
120	2993135-0000		2	ROLLER	
140	2660380-0000		1	VOLUME FLAP	
150	2705812-0100		1	VOLUME FLAP	**4-77**
230	2660391-0000		1	SCREW	
240	90134-0063		2	BUSHING/NUT M8X1, D=2,5 MM	
250	90028-0020		2	CONE TUBE 2,5MM	
260	1037734-0000		2	WEDGE	

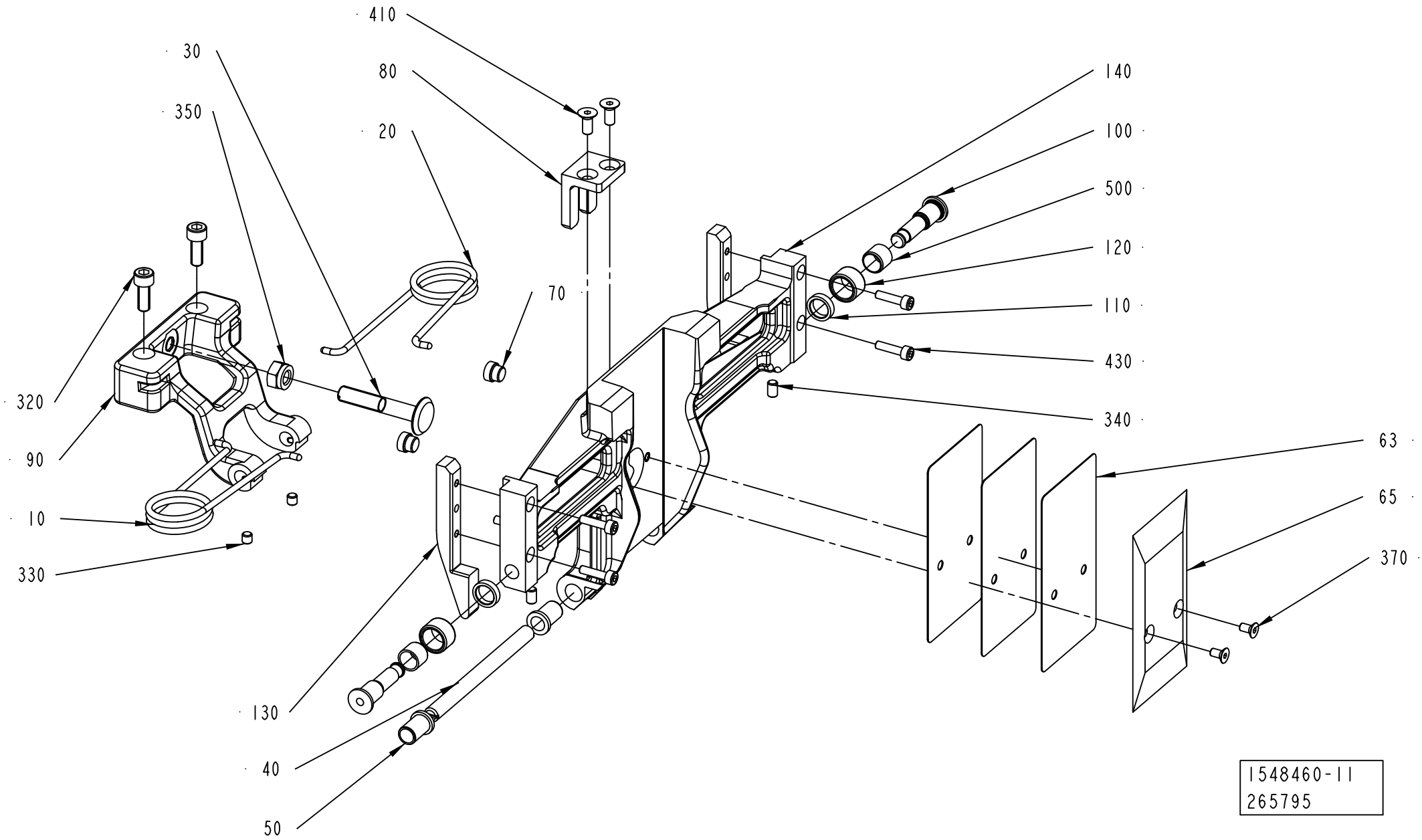
410
30
80
350
20
140
100
500
120
70
110
430
320
340
90
63
10
65
330
370
130
40
50
1548460-11
265795

Pos	Part No	UN	Qty	Description	Page No
TPA 1000SQ, TPA 0750SQ (Cont'd) (See drawing on page: 4-64)					
270	2652896-0000		2	SHAFT	
280	2662167-0000		2	BUSHING	
290	2663375-0000		2	WASHER	
300	2660397-0000		1	WEDGE	
310	2663376-0000		2	WASHER	
320	2663372-0000		2	SCREW	
330	311103-0232		1	PARALLEL PIN ISO 2338 3M6X8 A1	
340	312318-0323		2	SCREW ISO4029 M5X8 A4	
350	312625-0318		1	HEXAGON THIN NUT, EN 24035 ML6M M8 A4	
370	312155-0287		4	SCREW DIN 7991 MF6S M4X8 A4 70	
510	312105-0367		2	SCREW M6S ISO 4017 M6X14 A480	
515	312318-0285		2	SCREW ISO4029 M4X6 A4	
520	312115-0366		2	SCREW ISO4762 M6X12 A4 80	
530	2566332-0000		1	SHAFT	
535	2566333-0000		2	HOLDER (STAFFA)	
540	315105-0146		3	WASHER BRB 5,3X10 RFR	
550	312105-0328		1	SCREW M6S ISO 4017 M5X14 A480	
555	312105-0331		2	SCREW M6S ISO 4017 M5X20 A480	
570	90005-0082		2	WASHER PLAIN ROUND 4,3(M4)/12,H=1	
580	312105-0287		2	SCREW M6S ISO 4017 M4X8 A470	
585	312318-0325		2	SCREW ISO4029 M5X10 A4	
600	312105-0329		2	SCREW M6S ISO 4017 M5X16 A480	
610	312318-0323		2	SCREW ISO4029 M5X8 A4	

Pos	Part No	UN	Qty	Description	Page No

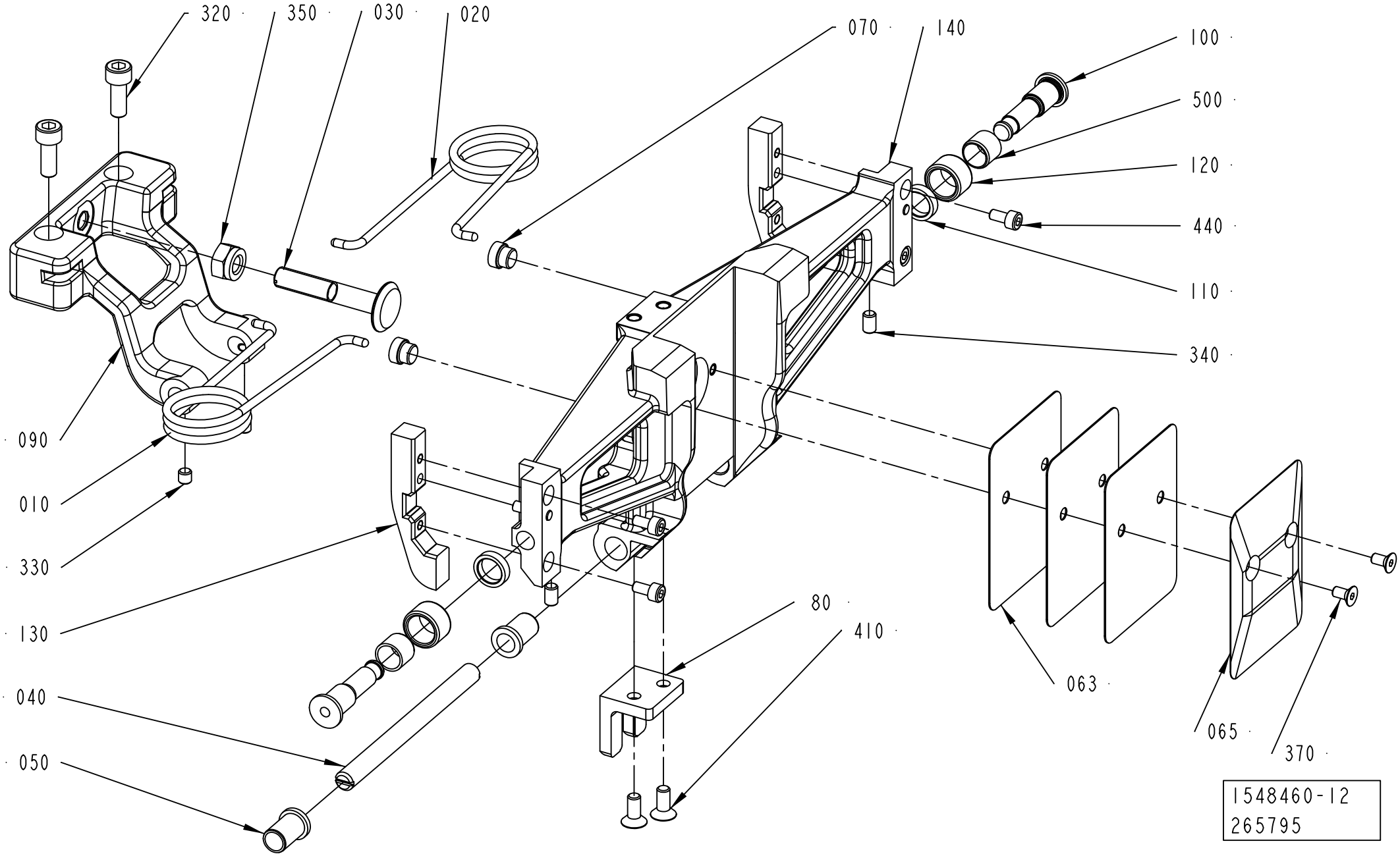
320
350
030
020
070
140
100
500
120
440
110
340
090
010
330
130
040
050
80
410
063
065
370
1548460-12
265795

Pos	Part No	UN	Qty	Description	Page No
SEE PREVIOUS LISTS PAGES: 4-65, 4-67, 4-69, 4-71, 4-73.					

Pos	Part No	UN	Qty	Description	Page No

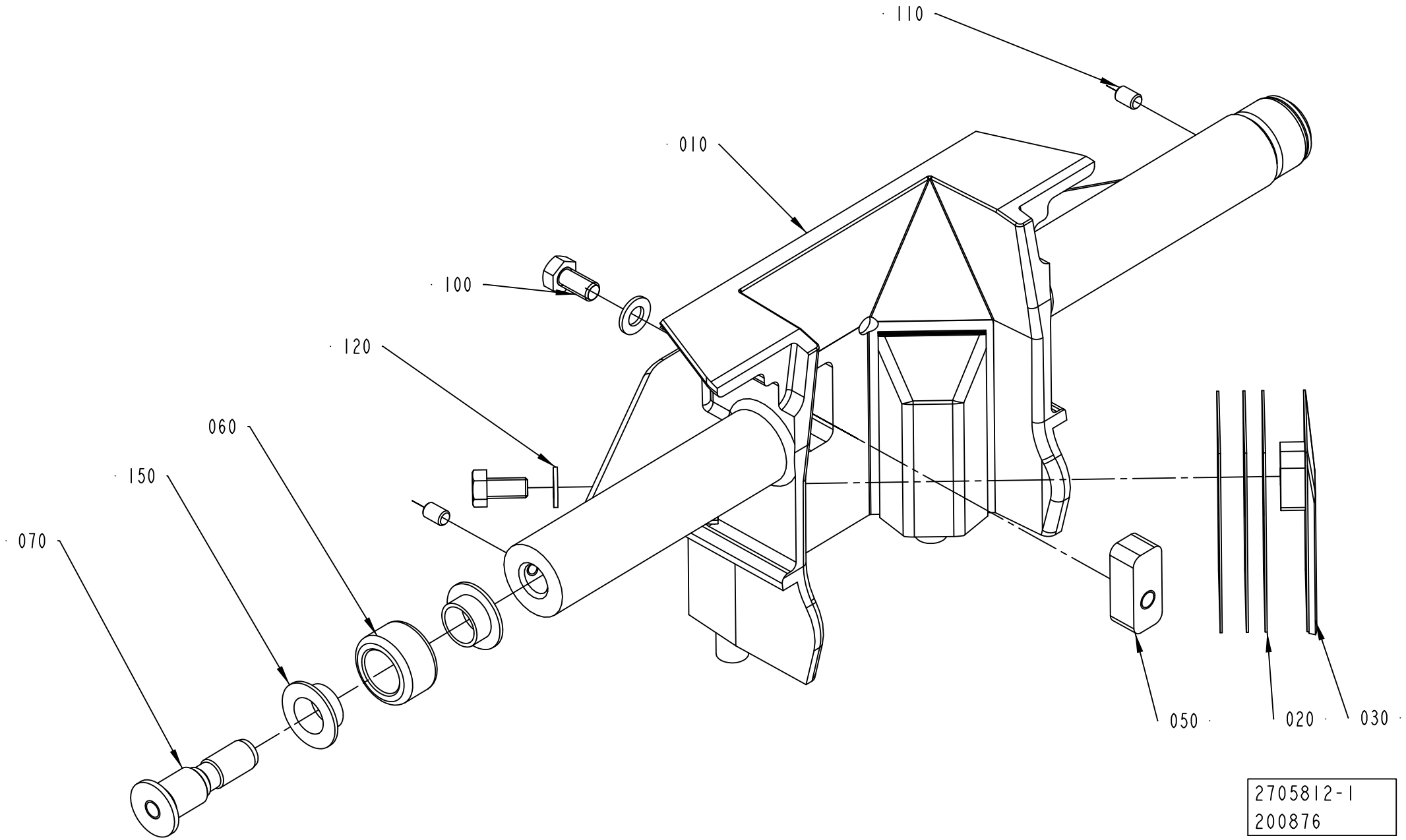
110
010
100
120
060
150
070
050
020
030
2705812-1
200876

ECM: 202682 - 20050402
Group number: 2705812-0100
Assembly Drawing: 2705812-1_1_AA

Pos	Part No	UN	Qty	Description	Page No
TPA 0750SQ					
010	2660382-0000		1	VOLUME FLAP	
TPA 1000SQ					
010	2660381-0000		1	VOLUME FLAP	
020	2660390-0000		6	VOLUME SHIM	
030	2660395-0000		2	VOLUME BULGE	
050	2660398-0000		1	WEDGE	
060	2660399-0000		2	ROLLER	
070	2594709-0000		2	AXLE PIN	
100	312105-0325		3	SCREW M6S ISO 4017 M5X10 A480	
110	312318-0285		2	SCREW ISO4029 M4X6 A4	
120	315105-0146		3	WASHER BRB 5,3X10 RFR	
150	90240-0289		4	FLANGE BUSHING, 10X12X6 MM	

Pos	Part No	UN	Qty	Description	Page No

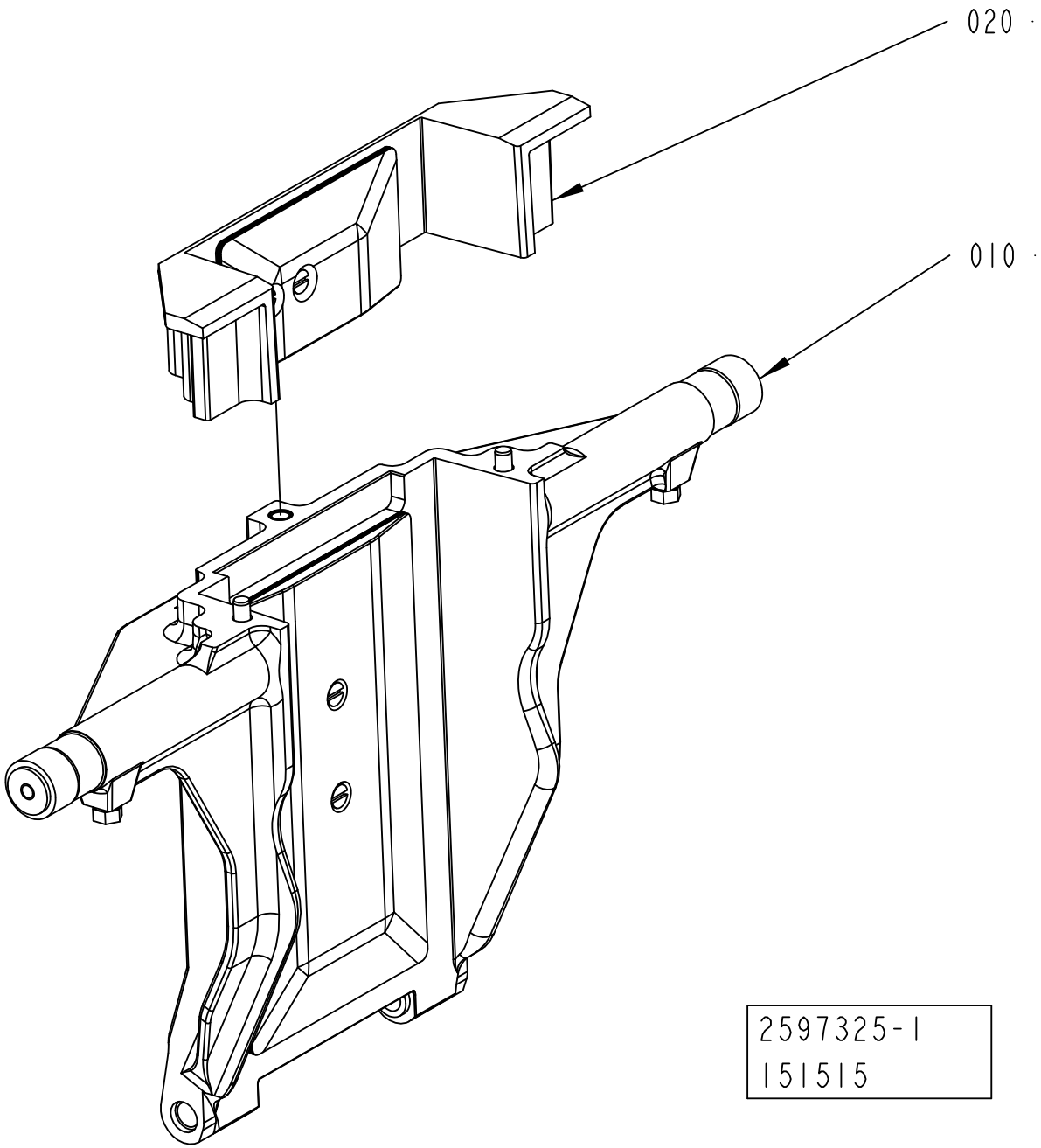
020
010
2597325-1
151515

ECM: 360778 - 20081001
Group number: 2597325-0100
Assembly Drawing: 2597325-1_1_AA

Pos	Part No	UN	Qty	Description	Page No
TBA 1890S QC, TBA 2000S QC					
020	2695955-0100		1	VOLUME FLAP	**4-81**
Common Parts					
010	2696182-0100		1	VOLUME FLAP	**4-83, 4-85**

Pos	Part No	UN	Qty	Description	Page No

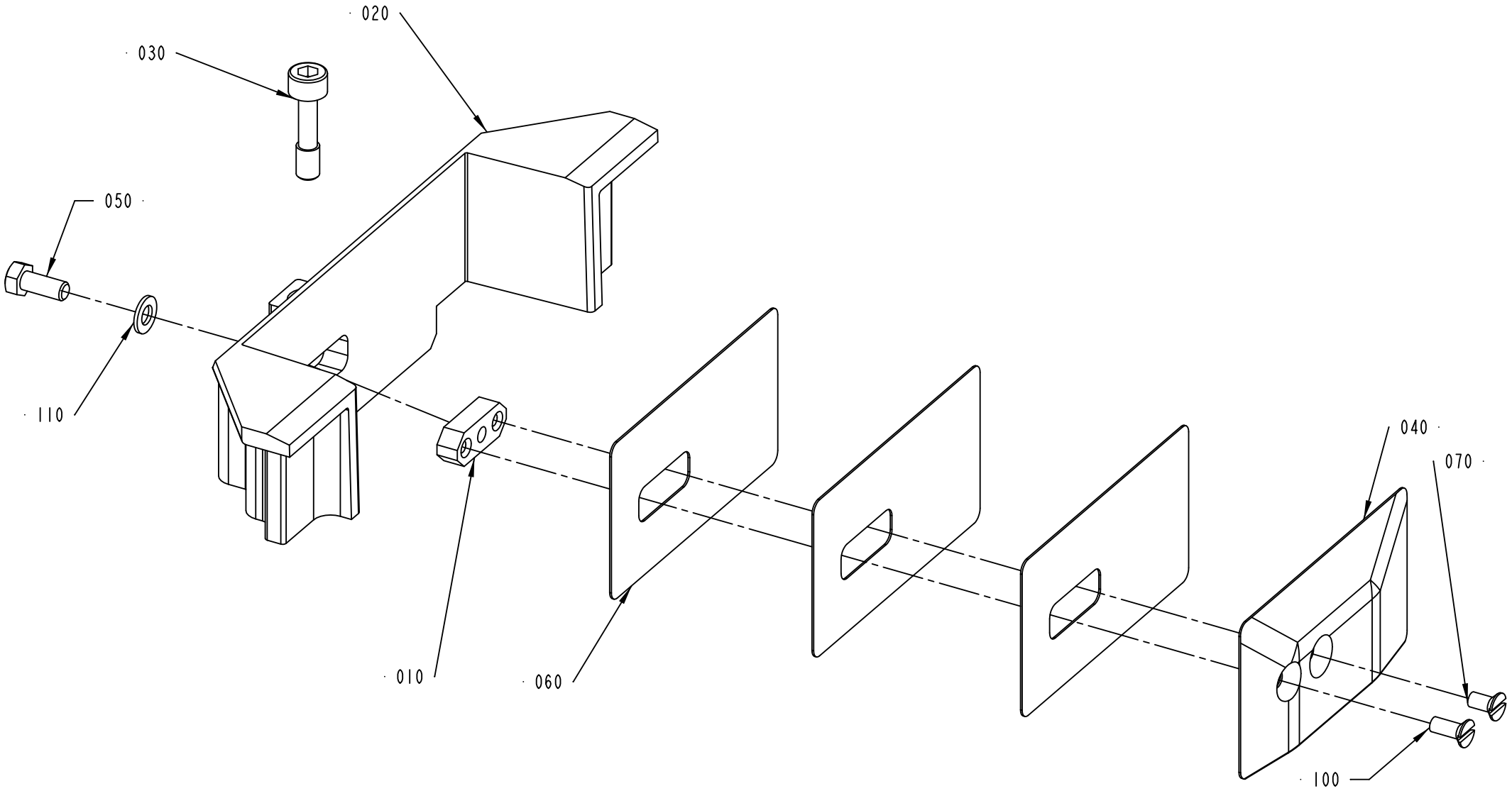
020
030
050
110
010
060
040
070
100
2695955-1
151514

ECM: 210192 - 20060509
Group number: 2695955-0100
Assembly Drawing: 2695955-1_1_AA

Pos	Part No	UN	Qty	Description	Page No
TBA 1890S					
020	2588306-0000		1	VOLUME FLAP	
040	2594889-0000		1	VOLUME BULGE	
060	2594891-0000		3	VOLUME SHIM	
TBA 2000S					
020	2588307-0000		1	VOLUME FLAP	
040	2672746-0000		1	VOLUME BULGE	
060	2672745-0000		3	VOLUME SHIM	
Common Parts					
010	1037734-0000		1	WEDGE	
030	2594896-0000		2	SCREW	
050	312105-0327		1	SCREW M6S ISO 4017 M5X12 A480	
070	312145-0287		1	SCREW ISO 2009 MFS M4X8 A4	
100	312145-0289		1	SCREW ISO 2009 MFS M4X10 A4	
110	315105-0146		1	WASHER BRB 5,3X10 RFR	

Pos	Part No	UN	Qty	Description	Page No

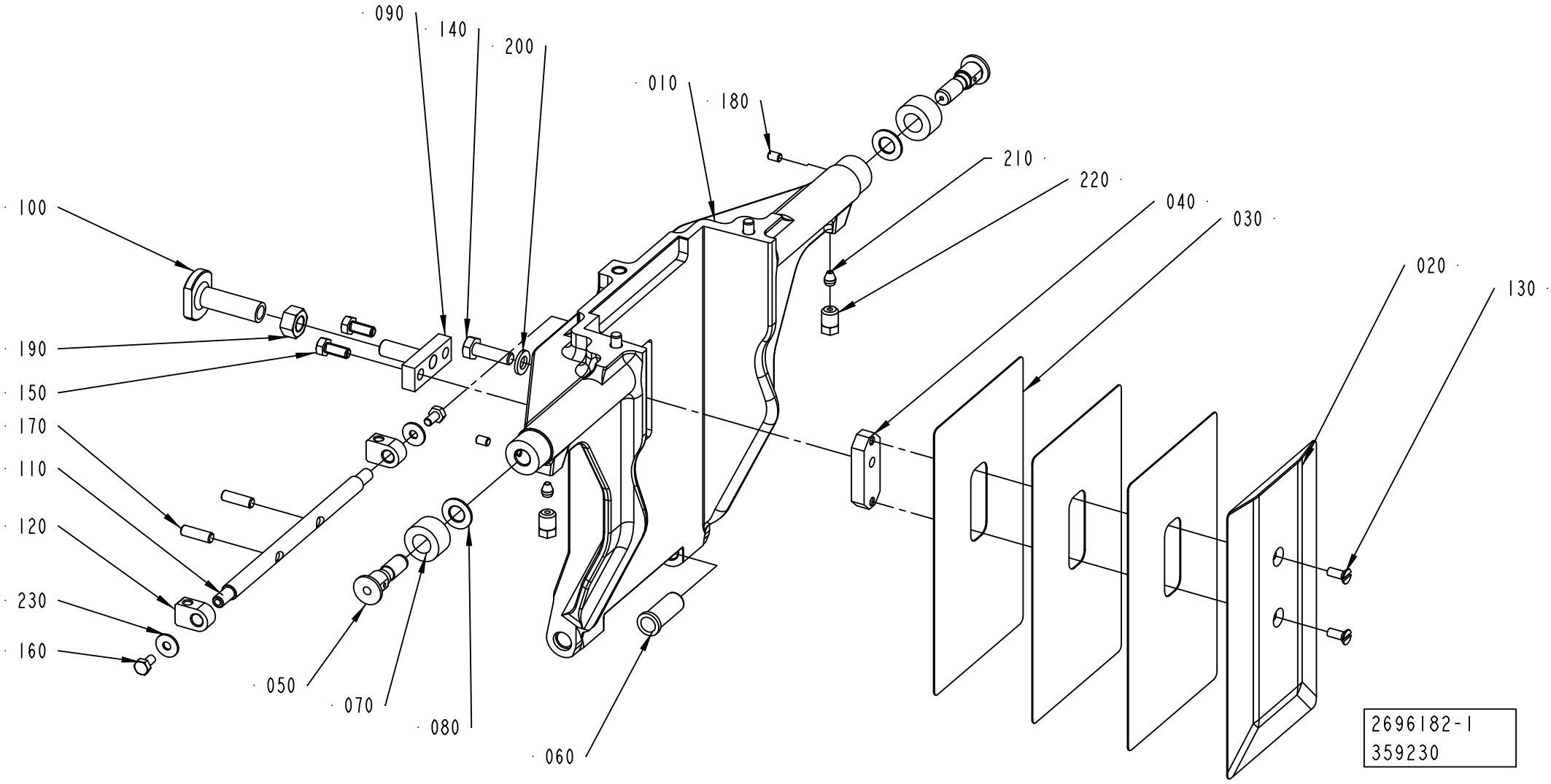
090
140
200
010
180
210
220
040
030
020
130
100
190
150
170
110
120
230
160
050
070
080
060
2696182-1
359230

ECM: 369776 - 20090101
Group number: 2696182-0100
Assembly Drawing: 2696182-1_1_AC

This list covers pages from 4-82 to 4-85

Pos	Part No	UN	Qty	Description	Page No
TBA 1400B (See drawing on page: 4-84)					
010	2764044-0000		1	VOLUME FLAP	
020	2764046-0000		1	VOLUME BULGE	
030	2764047-0000		3	VOLUME SHIM	
040	2764045-0000		1	WEDGE	
TBA 1890S QC, TBA 2000S QC (See drawing on page: 4-82)					
010	2588304-0000		1	VOLUME FLAP	
020	2594888-0000		1	VOLUME BULGE	
030	2594890-0000		3	VOLUME SHIM	
040	2594893-0000		1	WEDGE	
Common Parts					
050	2993134-0000		2	AXLE PIN	
060	1255916-0000		2	BUSHING	
070	2993135-0000		2	ROLLER	
080	19972-0000		2	WASHER	
090	2660401-0000		1	CATCH	
100	2660400-0000		1	STOP	
110	2566332-0000		1	SHAFT	
120	2566333-0000		2	HOLDER (STAFFA)	
130	312145-0289		2	SCREW ISO 2009 MFS M4X10 A4	
140	312105-0370		1	SCREW M6S ISO 4017 M6X20 A480	
150	312105-0327		2	SCREW M6S ISO 4017 M5X12 A480	
160	312105-0287		2	SCREW M6S ISO 4017 M4X8 A470	
170	312318-0329		2	SCREW ISO4029 M5X16 A4	
180	312318-0285		2	SCREW ISO4029 M4X6 A4	
190	312607-0318		1	HEXAGON NUT, EN 24032 M6M M8 A480	
200	315105-0153		1	WASHER BRB 6,4X12 RFR	
210	90028-0020		2	CONE TUBE 2,5MM	
220	90134-0063		2	BUSHING/NUT M8X1, D=2,5 MM	
230	90005-0082		2	WASHER PLAIN ROUND 4,3(M4)/12,H=1	

Pos	Part No	UN	Qty	Description	Page No

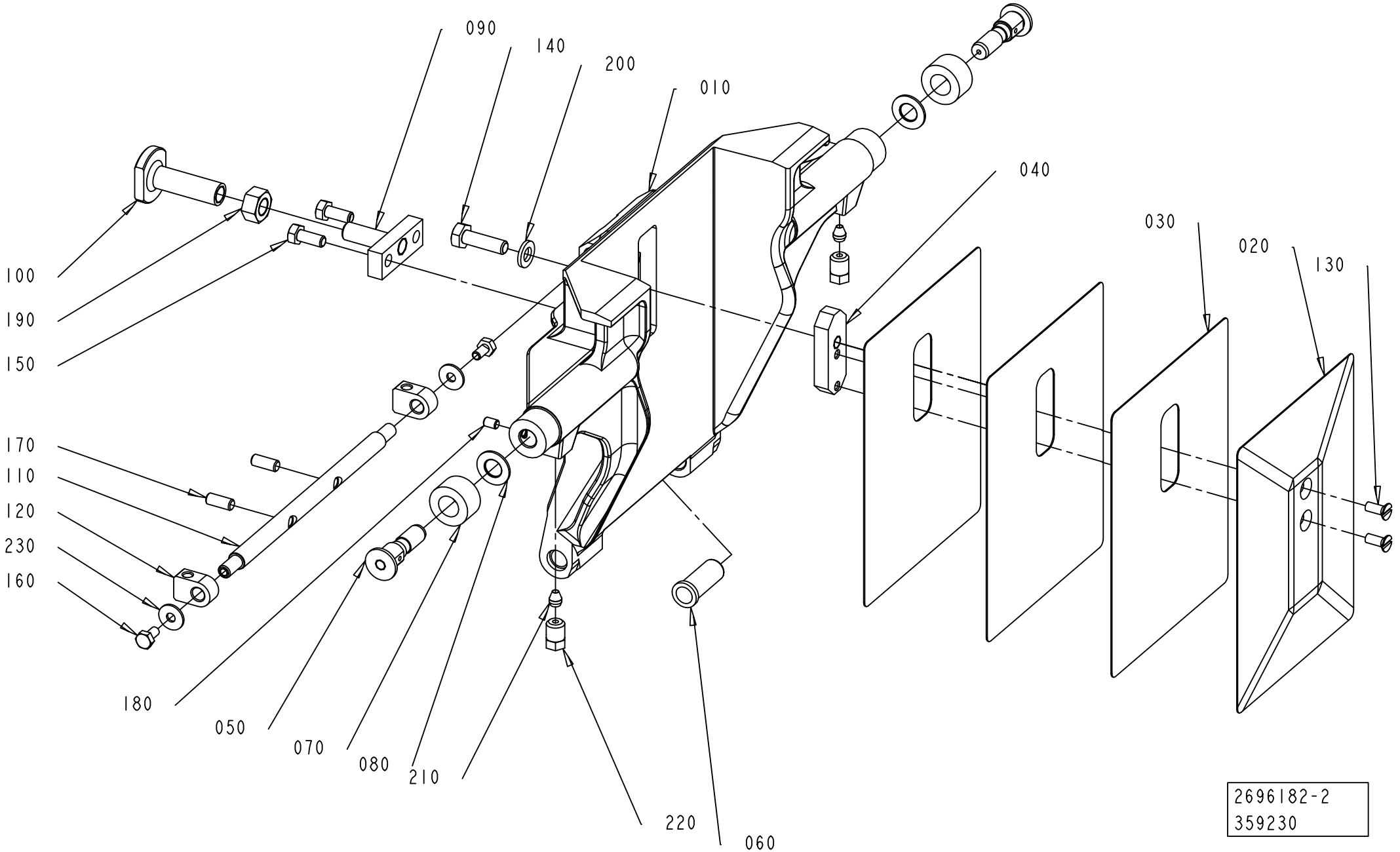
090
140
200
010
040
030
020
130
100
190
150
170
110
120
230
160
180
050
070
080
210
220
060
2696182-2
359230

ECM: 369776 - 20090101
Group number: 2696182-0100
Assembly Drawing: 2696182-2_1_AA

This list covers pages from 4-82 to 4-85

Pos	Part No	UN	Qty	Description	Page No
TBA 1400B (See drawing on page: 4-84)					
010	2764044-0000		1	VOLUME FLAP	
020	2764046-0000		1	VOLUME BULGE	
030	2764047-0000		3	VOLUME SHIM	
040	2764045-0000		1	WEDGE	
TBA 1890S QC, TBA 2000S QC (See drawing on page: 4-82)					
010	2588304-0000		1	VOLUME FLAP	
020	2594888-0000		1	VOLUME BULGE	
030	2594890-0000		3	VOLUME SHIM	
040	2594893-0000		1	WEDGE	
Common Parts					
050	2993134-0000		2	AXLE PIN	
060	1255916-0000		2	BUSHING	
070	2993135-0000		2	ROLLER	
080	19972-0000		2	WASHER	
090	2660401-0000		1	CATCH	
100	2660400-0000		1	STOP	
110	2566332-0000		1	SHAFT	
120	2566333-0000		2	HOLDER (STAFFA)	
130	312145-0289		2	SCREW ISO 2009 MFS M4X10 A4	
140	312105-0370		1	SCREW M6S ISO 4017 M6X20 A480	
150	312105-0327		2	SCREW M6S ISO 4017 M5X12 A480	
160	312105-0287		2	SCREW M6S ISO 4017 M4X8 A470	
170	312318-0329		2	SCREW ISO4029 M5X16 A4	
180	312318-0285		2	SCREW ISO4029 M4X6 A4	
190	312607-0318		1	HEXAGON NUT, EN 24032 M6M M8 A480	
200	315105-0153		1	WASHER BRB 6,4X12 RFR	
210	90028-0020		2	CONE TUBE 2,5MM	
220	90134-0063		2	BUSHING/NUT M8X1, D=2,5 MM	
230	90005-0082		2	WASHER PLAIN ROUND 4,3(M4)/12,H=1	

Pos	Part No	UN	Qty	Description	Page No

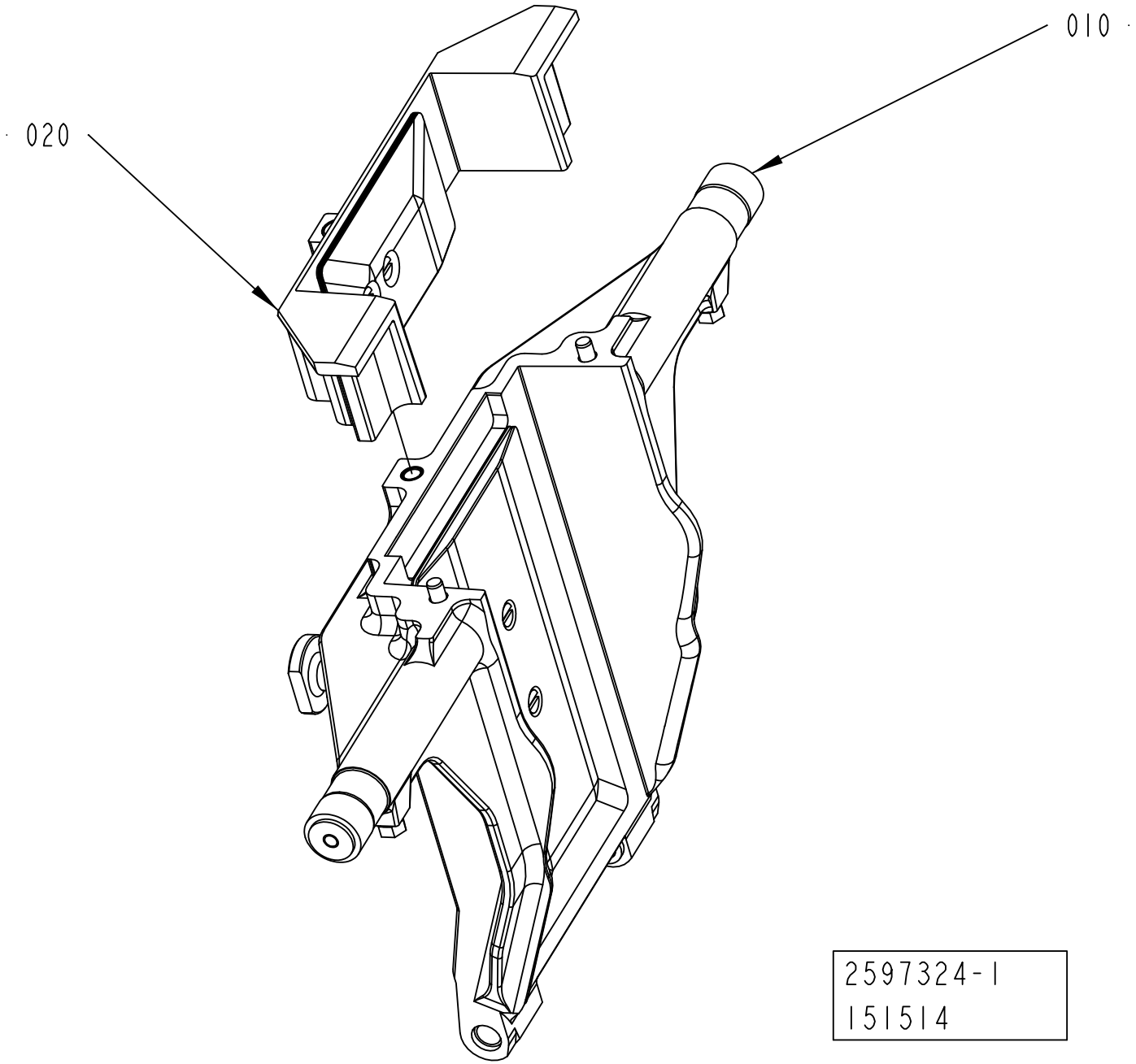
010
020
2597324-1
151514

ECM: 360777 - 20081001
Group number: 2597324-0100
Assembly Drawing: 2597324-1_1_AA

Pos	Part No	UN	Qty	Description	Page No
TBA 1890S QC, TBA 2000S QC					
020	2695955-0100		1	VOLUME FLAP	**4-81**
Common Parts					
010	2696156-0100		1	VOLUME FLAP	**4-89, 4-91**

Pos	Part No	UN	Qty	Description	Page No

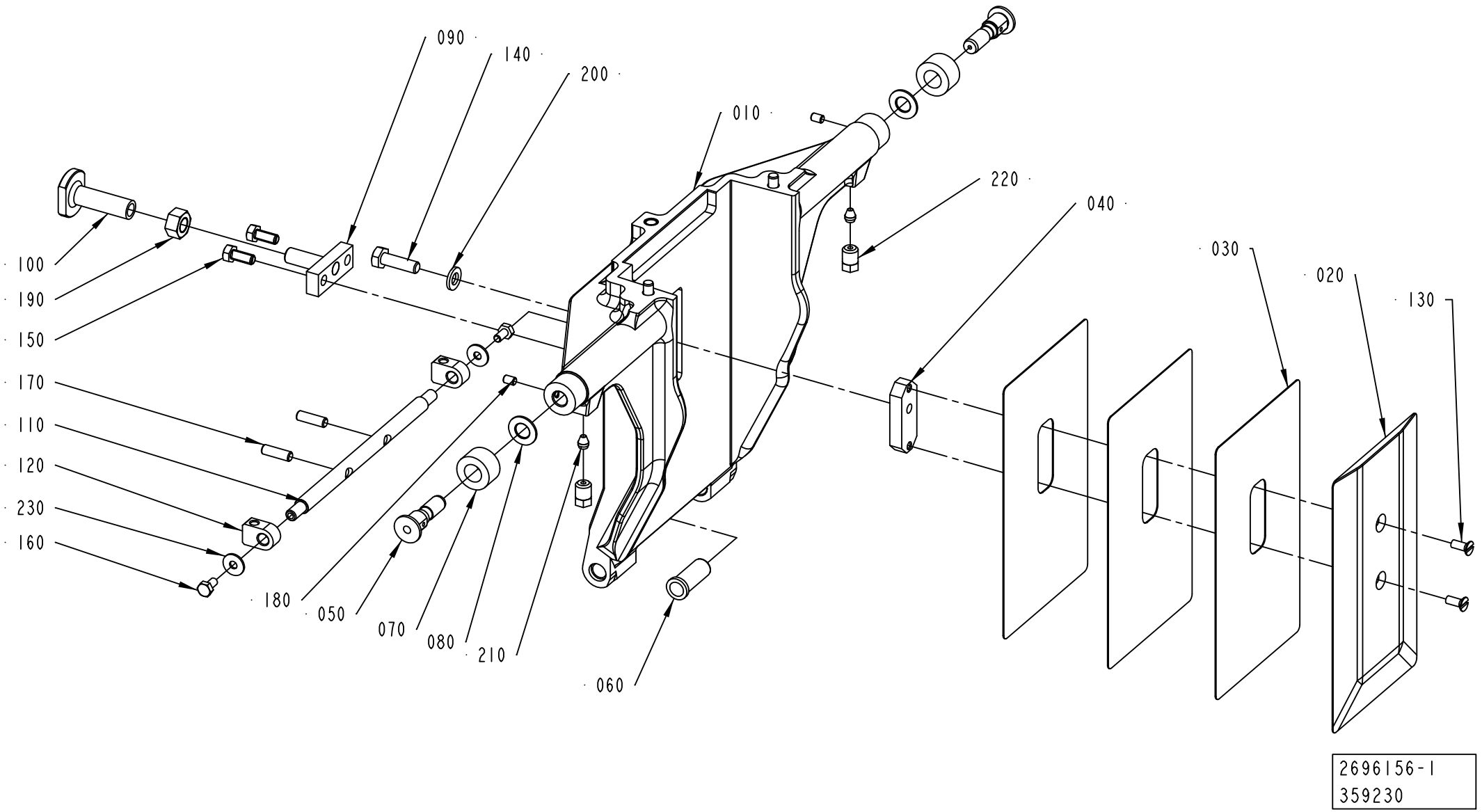
090
140
200
010
220
040
030
020
130
100
190
150
170
110
120
230
160
180
050
070
080
210
060
2696156-1
359230

ECM: 369777 - 20090101
Group number: 2696156-0100
Assembly Drawing: 2696156-1_1_AC

This list covers pages from 4-88 to 4-91

Pos	Part No	UN	Qty	Description	Page No
TBA 1400B (See drawing on page: 4-90)					
010	2764043-0000		1	VOLUME FLAP	
020	2764046-0000		1	VOLUME BULGE	
030	2764047-0000		3	VOLUME SHIM	
040	2764045-0000		1	WEDGE	
TBA 1890S QC, TBA 2000S QC (See drawing on page: 4-88)					
010	2588305-0000		1	VOLUME FLAP	
020	2594888-0000		1	VOLUME BULGE	
030	2594890-0000		3	VOLUME SHIM	
040	2594893-0000		1	WEDGE	
Common Parts					
050	2993134-0000		2	AXLE PIN	
060	1255916-0000		2	BUSHING	
070	2993135-0000		2	ROLLER	
080	19972-0000		2	WASHER	
090	2660401-0000		1	CATCH	
100	2660400-0000		1	STOP	
110	2566332-0000		1	SHAFT	
120	2566333-0000		2	HOLDER (STAFFA)	
130	312145-0289		2	SCREW ISO 2009 MFS M4X10 A4	
140	312105-0370		1	SCREW M6S ISO 4017 M6X20 A480	
150	312105-0327		2	SCREW M6S ISO 4017 M5X12 A480	
160	312105-0287		2	SCREW M6S ISO 4017 M4X8 A470	
170	312318-0329		2	SCREW ISO4029 M5X16 A4	
180	312318-0285		2	SCREW ISO4029 M4X6 A4	
190	312607-0318		1	HEXAGON NUT, EN 24032 M6M M8 A480	
200	315105-0153		1	WASHER BRB 6,4X12 RFR	
210	90028-0020		2	CONE TUBE 2,5MM	
220	90134-0063		2	BUSHING/NUT M8X1, D=2,5 MM	
230	90005-0082		2	WASHER PLAIN ROUND 4,3(M4)/12,H=1	

Pos	Part No	UN	Qty	Description	Page No

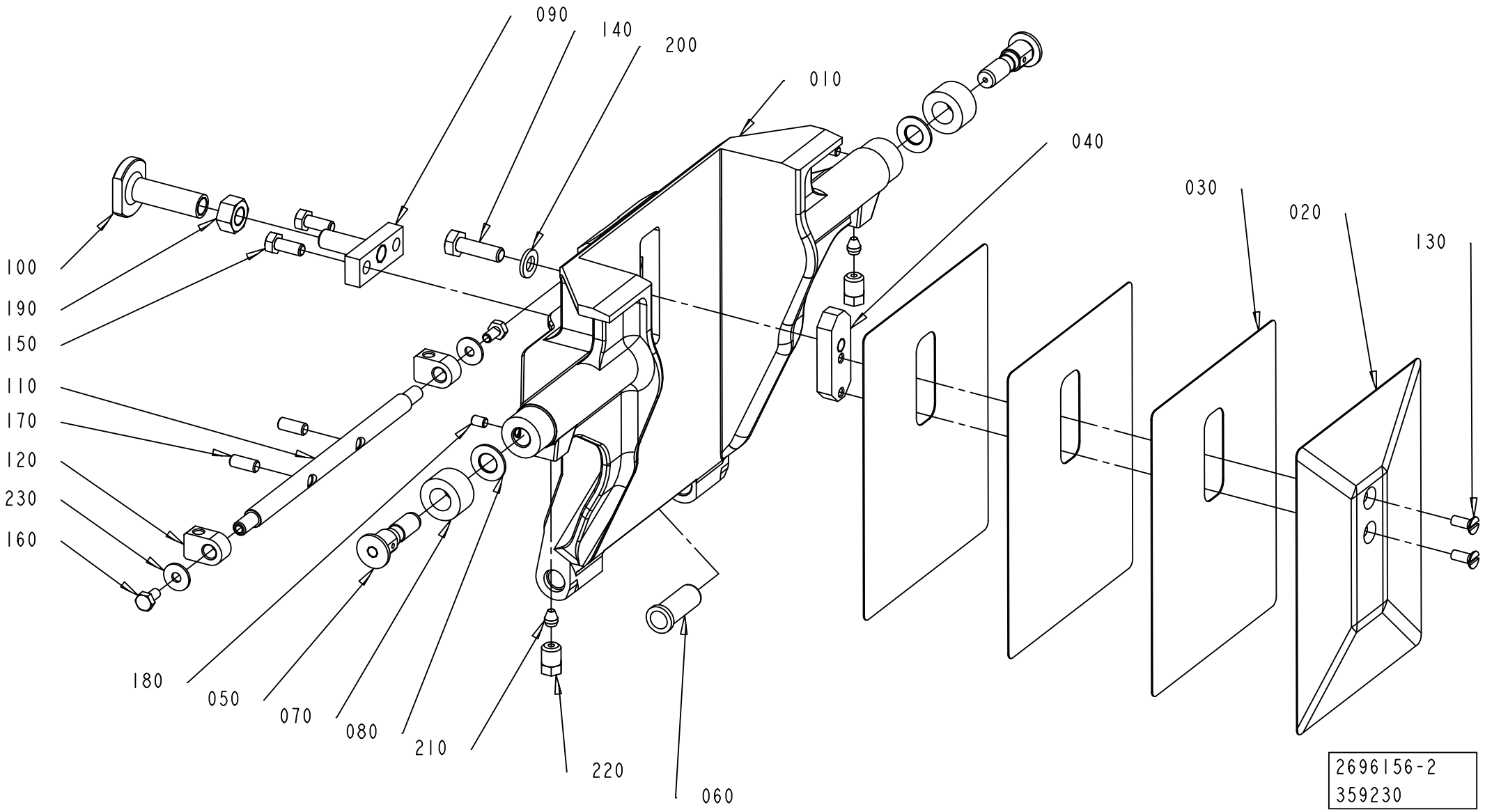
090
140
200
010
040
030
020
130
100
190
150
110
170
120
230
160
180
050
070
080
210
220
060
2696156-2
359230

ECM: 369777 - 20090101
Group number: 2696156-0100
Assembly Drawing: 2696156-2_1_AA

This list covers pages from 4-88 to 4-91

Pos	Part No	UN	Qty	Description	Page No
TBA 1400B (See drawing on page: 4-90)					
010	2764043-0000		1	VOLUME FLAP	
020	2764046-0000		1	VOLUME BULGE	
030	2764047-0000		3	VOLUME SHIM	
040	2764045-0000		1	WEDGE	
TBA 1890S QC, TBA 2000S QC (See drawing on page: 4-88)					
010	2588305-0000		1	VOLUME FLAP	
020	2594888-0000		1	VOLUME BULGE	
030	2594890-0000		3	VOLUME SHIM	
040	2594893-0000		1	WEDGE	
Common Parts					
050	2993134-0000		2	AXLE PIN	
060	1255916-0000		2	BUSHING	
070	2993135-0000		2	ROLLER	
080	19972-0000		2	WASHER	
090	2660401-0000		1	CATCH	
100	2660400-0000		1	STOP	
110	2566332-0000		1	SHAFT	
120	2566333-0000		2	HOLDER (STAFFA)	
130	312145-0289		2	SCREW ISO 2009 MFS M4X10 A4	
140	312105-0370		1	SCREW M6S ISO 4017 M6X20 A480	
150	312105-0327		2	SCREW M6S ISO 4017 M5X12 A480	
160	312105-0287		2	SCREW M6S ISO 4017 M4X8 A470	
170	312318-0329		2	SCREW ISO4029 M5X16 A4	
180	312318-0285		2	SCREW ISO4029 M4X6 A4	
190	312607-0318		1	HEXAGON NUT, EN 24032 M6M M8 A480	
200	315105-0153		1	WASHER BRB 6,4X12 RFR	
210	90028-0020		2	CONE TUBE 2,5MM	
220	90134-0063		2	BUSHING/NUT M8X1, D=2,5 MM	
230	90005-0082		2	WASHER PLAIN ROUND 4,3(M4)/12,H=1	

Pos	Part No	UN	Qty	Description	Page No

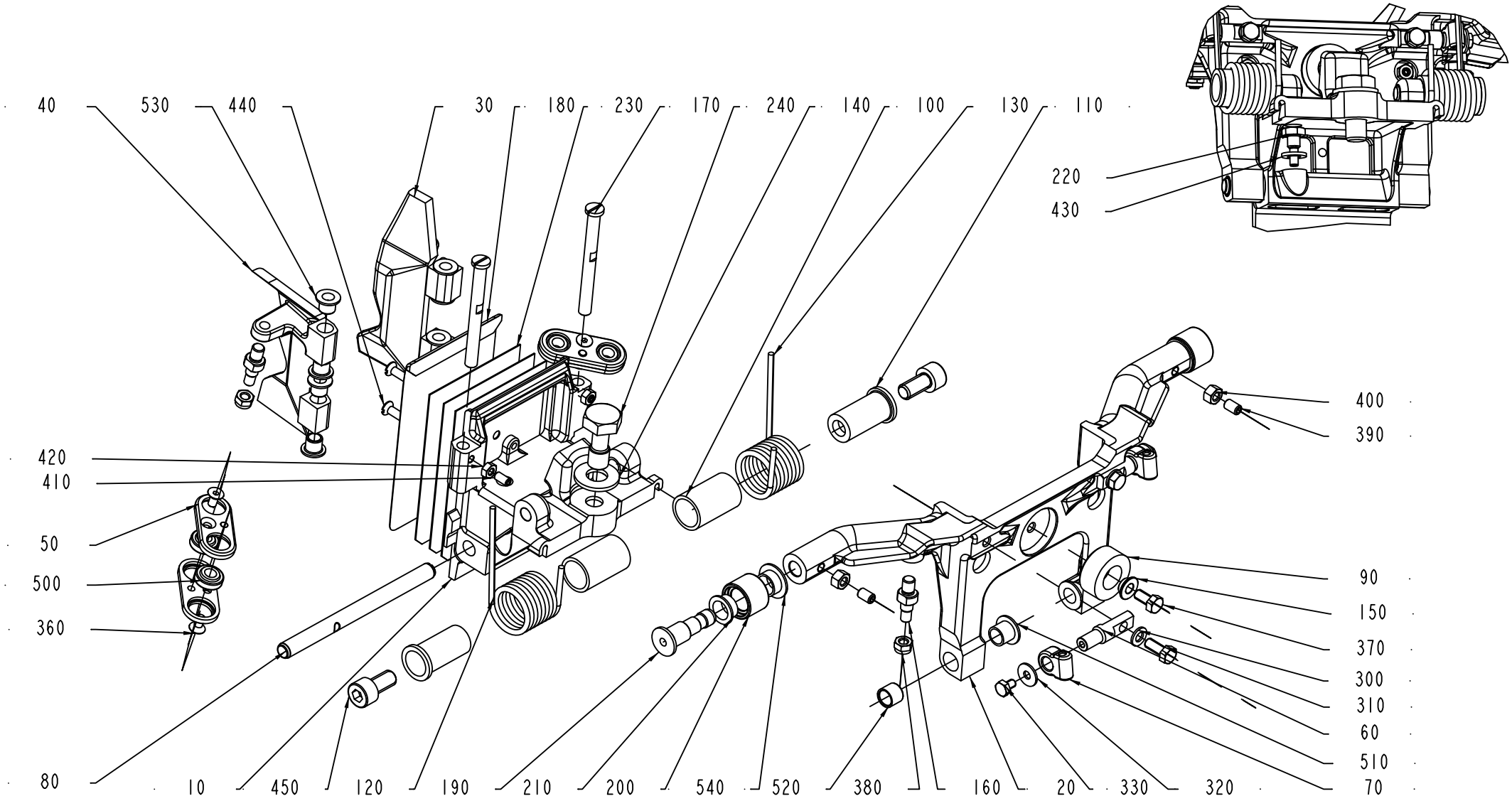
40
530
440
30
180
230
170
240
140
100
130
110
220
430
420
410
50
500
360
80
10
450
120
190
210
200
540
520
380
160
20
330
320
70
510
60
310
300
370
150
90
400
390
2922540-1
319762

ECM: 326429 - 20080102
Group number: 2922540-0100
Assembly Drawing: 2922540-1_1_AA

Pos	Part No	UN	Qty	Description	Page No
-					
010	2917412-0004		1	FLAP HOLDER	
020	2917413-0000		1	FRAME	
030	2917416-0000		1	FLAP	
040	2917417-0000		1	FLAP	
050	2862307-0000		4	LEVER	
060	2917418-0000		2	PIN	
070	2928239-0000		2	HOLDER	
080	2649660-0000		1	SHAFT	
090	2862308-0000		1	DAMPER	
100	1538521-0000		2	BUSHING	
110	2917419-0000		2	PIN	
120	2922536-0000		1	SPRING	
130	2922537-0000		1	SPRING	
140	315105-0173		1	WASHER BRB 10,5X22 RFR	
150	2572197-0000		1	SPACER	
160	2909850-0000		4	SPACER SCREW	
170	2866740-0000		2	SHAFT	
180	2909185-0000		1	VOLUME BULGE	
190	2868844-0000		2	AXLE PIN	
200	2660295-0000		2	ROLLER	
210	2660296-0000		2	BUSHING	
220	2922489-0000		1	PIN	
230	2909853-0000		3	SHIM	
240	2922524-0000		1	SCREW	
300	315105-0146		2	WASHER BRB 5,3X10 RFR	
310	312105-0327		2	SCREW M6S ISO 4017 M5X12 A480	
320	90005-0082		2	WASHER PLAIN ROUND 4,3(M4)/12,H=1	
330	312105-0285		2	SCREW M6S ISO 4017 M4X6 A470	
360	312155-0287		4	SCREW DIN 7991 MF6S M4X8 A4 70	
370	312105-0325		1	SCREW M6S ISO 4017 M5X10 A480	
380	312812-0314		4	HEXAGON NUT, NY-LOCK M5 A480	
390	312318-0323		2	SCREW ISO4029 M5X8 A4	
400	312605-0314		2	HEXAGON NUT, M6M M5 A280	
410	312318-0287		2	SCREW ISO4029 M4X8 A4	
420	312605-0312		2	HEXAGON NUT, M6M M4 A280	
430	315105-0153		1	WASHER BRB 6,4X12 RFR	
440	312145-0291		2	SCREW ISO 2009 MFS M4X12 A4	
450	312115-0449		2	SCREW ISO4762 M8X16 A4 80	
500	90600-3582		4	SPHERICAL BEARING, GE 6 TGR	
510	90240-0260		2	FLANGE BUSHING, 8X10X9 MM	
520	90458-0353		2	BUSHING, 8X10X8 MM	
530	321155-0062		8	FLANGE BUSHING, 6X8X6 MM	
540	90240-0289		2	FLANGE BUSHING, 10X12X6 MM	

Machine Type | Group Description | Used-In | Group Number | Page No

VOLUME FLAP CUTTING LEFT

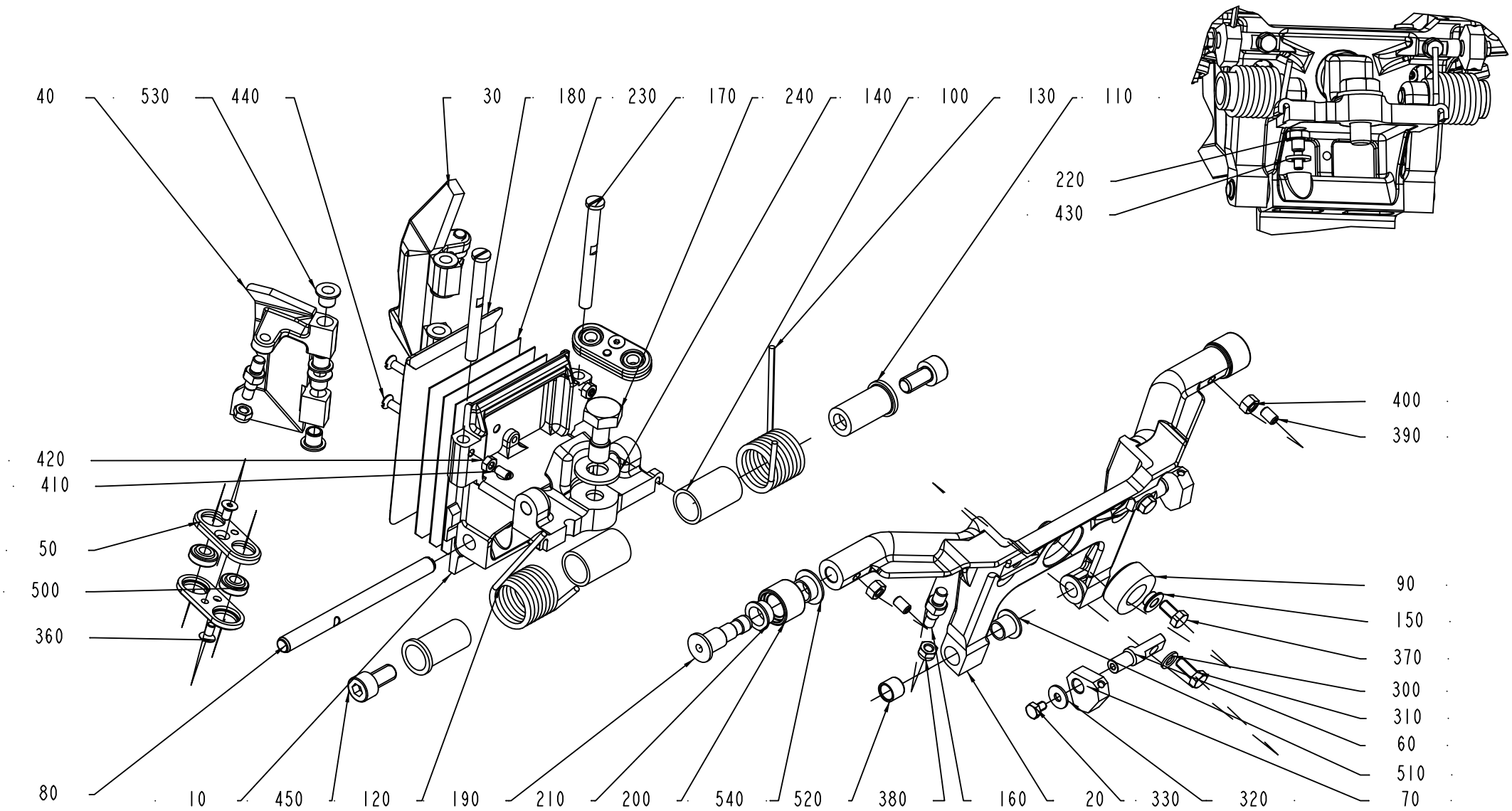

ECM: 326430 - 20080102
Group number: 2928232-0100
Assembly Drawing: 2928232-1_1_AA

Pos	Part No	UN	Qty	Description	Page No
-					
010	2917412-0001		1	FLAP HOLDER	
020	2917413-0000		1	FRAME	
030	2917416-0000		1	FLAP	
040	2917417-0000		1	FLAP	
050	2862307-0000		4	LEVER	
060	2917418-0000		2	PIN	
070	2928239-0000		2	HOLDER	
080	2649660-0000		1	SHAFT	
090	2862308-0000		1	DAMPER	
100	1538521-0000		2	BUSHING	
110	2917419-0000		2	PIN	
120	2922536-0000		1	SPRING	
130	2922537-0000		1	SPRING	
140	315105-0173		1	WASHER BRB 10,5X22 RFR	
150	2572197-0000		1	SPACER	
160	2909850-0000		4	SPACER SCREW	
170	2866740-0000		2	SHAFT	
180	2909185-0000		1	VOLUME BULGE	
190	2868844-0000		2	AXLE PIN	
200	2660295-0000		2	ROLLER	
210	2660296-0000		2	BUSHING	
220	2922489-0000		1	PIN	
230	2909853-0000		3	SHIM	
240	2922524-0000		1	SCREW	
300	315105-0146		2	WASHER BRB 5,3X10 RFR	
310	312105-0327		2	SCREW M6S ISO 4017 M5X12 A480	
320	90005-0082		2	WASHER PLAIN ROUND 4,3(M4)/12,H=1	
330	312105-0285		2	SCREW M6S ISO 4017 M4X6 A470	
360	312155-0287		4	SCREW DIN 7991 MF6S M4X8 A4 70	
370	312105-0325		1	SCREW M6S ISO 4017 M5X10 A480	
380	312812-0314		4	HEXAGON NUT, NY-LOCK M5 A480	
390	312318-0323		2	SCREW ISO4029 M5X8 A4	
400	312605-0314		2	HEXAGON NUT, M6M M5 A280	
410	312318-0287		2	SCREW ISO4029 M4X8 A4	
420	312605-0312		2	HEXAGON NUT, M6M M4 A280	
430	315105-0153		1	WASHER BRB 6,4X12 RFR	
440	312145-0291		2	SCREW ISO 2009 MFS M4X12 A4	
450	312115-0449		2	SCREW ISO4762 M8X16 A4 80	
500	90600-3582		4	SPHERICAL BEARING, GE 6 TGR	
510	90240-0260		2	FLANGE BUSHING, 8X10X9 MM	
520	90458-0353		2	BUSHING, 8X10X8 MM	
530	321155-0062		8	FLANGE BUSHING, 6X8X6 MM	
540	90240-0289		2	FLANGE BUSHING, 10X12X6 MM	

Machine Type | Group Description | Used-In | Group Number | Page No

VOLUME FLAP PRESSURE RIGHT

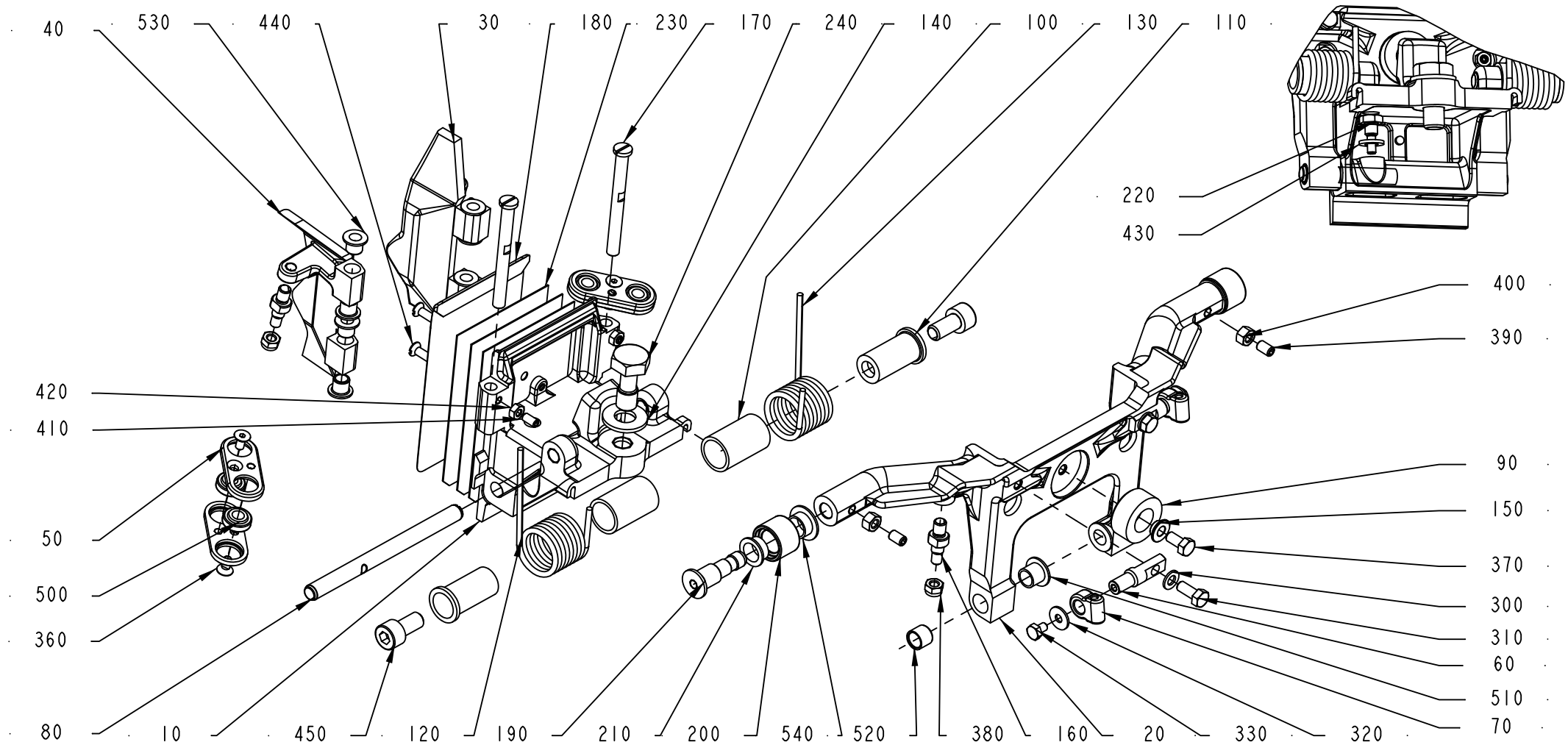

ECM: 326428 - 20080102
Group number: 2922539-0100
Assembly Drawing: 2922539-1_1_AA

Pos	Part No	UN	Qty	Description	Page No
-					
010	2917412-0002		1	FLAP HOLDER	
020	2917413-0000		1	FRAME	
030	2917414-0000		1	FLAP	
040	2917415-0000		1	FLAP	
050	2862307-0000		4	LEVER	
060	2917418-0000		2	PIN	
070	2928239-0000		2	HOLDER	
080	2649660-0000		1	SHAFT	
090	2862308-0000		1	DAMPER	
100	1538521-0000		2	BUSHING	
110	2917419-0000		2	PIN	
120	2922536-0000		1	SPRING	
130	2922537-0000		1	SPRING	
140	315105-0173		1	WASHER BRB 10,5X22 RFR	
150	2572197-0000		1	SPACER	
160	2909850-0000		4	SPACER SCREW	
170	2866740-0000		2	SHAFT	
180	2909185-0000		1	VOLUME BULGE	
190	2868844-0000		2	AXLE PIN	
200	2660295-0000		2	ROLLER	
210	2660296-0000		2	BUSHING	
220	2922489-0000		1	PIN	
230	2909853-0000		3	SHIM	
240	2922524-0000		1	SCREW	
300	315105-0146		2	WASHER BRB 5,3X10 RFR	
310	312105-0327		2	SCREW M6S ISO 4017 M5X12 A480	
320	90005-0082		2	WASHER PLAIN ROUND 4,3(M4)/12,H=1	
330	312105-0285		2	SCREW M6S ISO 4017 M4X6 A470	
360	312155-0287		4	SCREW DIN 7991 MF6S M4X8 A4 70	
370	312105-0325		1	SCREW M6S ISO 4017 M5X10 A480	
380	312812-0314		4	HEXAGON NUT, NY-LOCK M5 A480	
390	312318-0323		2	SCREW ISO4029 M5X8 A4	
400	312605-0314		2	HEXAGON NUT, M6M M5 A280	
410	312318-0287		2	SCREW ISO4029 M4X8 A4	
420	312605-0312		2	HEXAGON NUT, M6M M4 A280	
430	315105-0153		1	WASHER BRB 6,4X12 RFR	
440	312145-0291		2	SCREW ISO 2009 MFS M4X12 A4	
450	312115-0449		2	SCREW ISO4762 M8X16 A4 80	
500	90600-3582		4	SPHERICAL BEARING, GE 6 TGR	
510	90240-0260		2	FLANGE BUSHING, 8X10X9 MM	
520	90458-0353		2	BUSHING, 8X10X8 MM	
530	321155-0062		8	FLANGE BUSHING, 6X8X6 MM	
540	90240-0289		2	FLANGE BUSHING, 10X12X6 MM	

Machine Type | Group Description | Used-In | Group Number | Page No

VOLUME FLAP PRESSURE LEFT

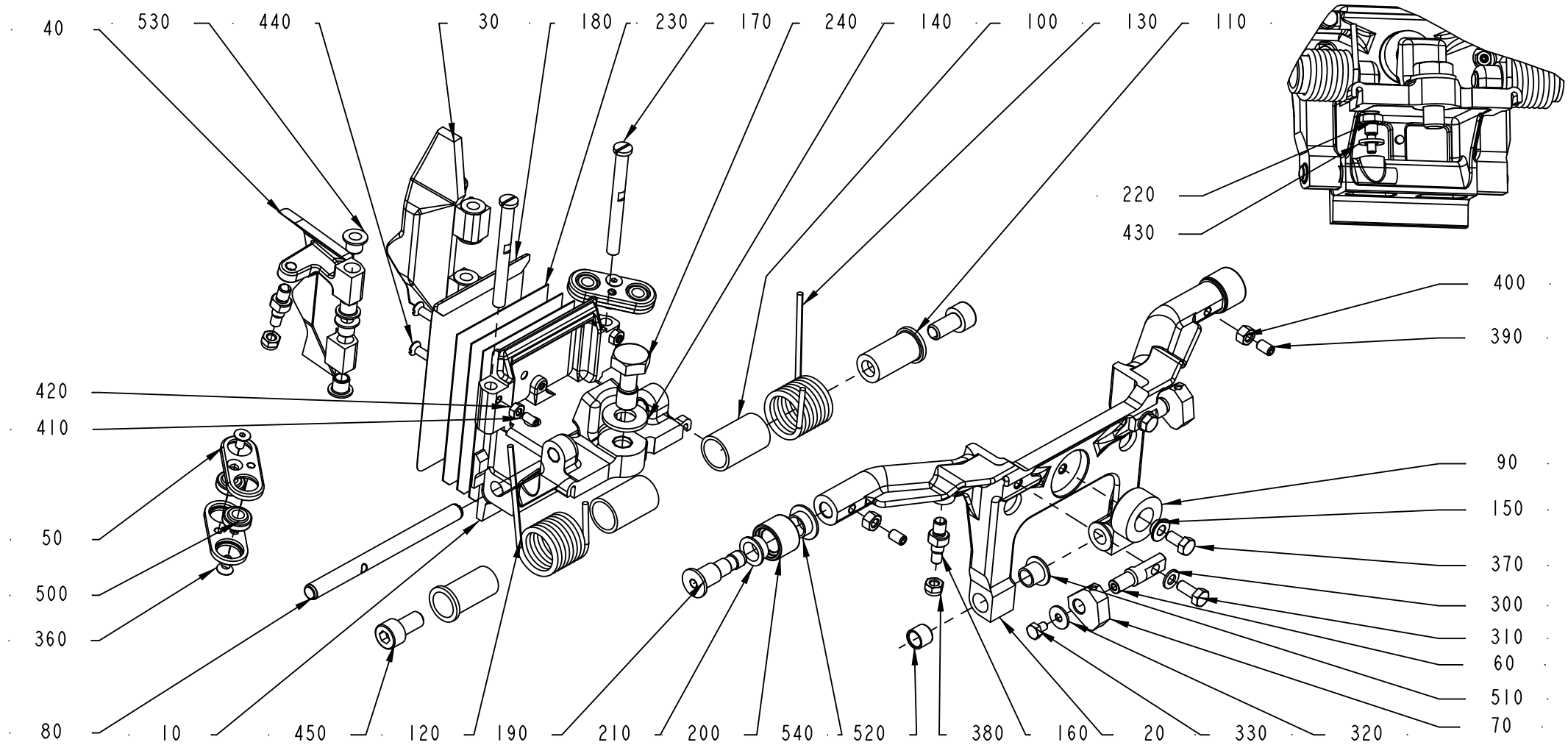

ECM: 326431 - 20080102
Group number: 2928233-0100
Assembly Drawing: 2928233-1_1_AA

Pos	Part No	UN	Qty	Description	Page No
-					
010	2917412-0003		1	FLAP HOLDER	
020	2917413-0000		1	FRAME	
030	2917414-0000		1	FLAP	
040	2917415-0000		1	FLAP	
050	2862307-0000		4	LEVER	
060	2917418-0000		2	PIN	
070	2928239-0000		2	HOLDER	
080	2649660-0000		1	SHAFT	
090	2862308-0000		1	DAMPER	
100	1538521-0000		2	BUSHING	
110	2917419-0000		2	PIN	
120	2922536-0000		1	SPRING	
130	2922537-0000		1	SPRING	
140	315105-0173		1	WASHER BRB 10,5X22 RFR	
150	2572197-0000		1	SPACER	
160	2909850-0000		4	SPACER SCREW	
170	2866740-0000		2	SHAFT	
180	2909185-0000		1	VOLUME BULGE	
190	2868844-0000		2	AXLE PIN	
200	2660295-0000		2	ROLLER	
210	2660296-0000		2	BUSHING	
220	2922489-0000		1	PIN	
230	2909853-0000		3	SHIM	
240	2922524-0000		1	SCREW	
300	315105-0146		2	WASHER BRB 5,3X10 RFR	
310	312105-0327		2	SCREW M6S ISO 4017 M5X12 A480	
320	90005-0082		2	WASHER PLAIN ROUND 4,3(M4)/12,H=1	
330	312105-0285		2	SCREW M6S ISO 4017 M4X6 A470	
360	312155-0287		4	SCREW DIN 7991 MF6S M4X8 A4 70	
370	312105-0325		1	SCREW M6S ISO 4017 M5X10 A480	
380	312812-0314		4	HEXAGON NUT, NY-LOCK M5 A480	
390	312318-0323		2	SCREW ISO4029 M5X8 A4	
400	312605-0314		2	HEXAGON NUT, M6M M5 A280	
410	312318-0287		2	SCREW ISO4029 M4X8 A4	
420	312605-0312		2	HEXAGON NUT, M6M M4 A280	
430	315105-0153		1	WASHER BRB 6,4X12 RFR	
440	312145-0291		2	SCREW ISO 2009 MFS M4X12 A4	
450	312115-0449		2	SCREW ISO4762 M8X16 A4 80	
500	90600-3582		4	SPHERICAL BEARING, GE 6 TGR	
510	90240-0260		2	FLANGE BUSHING, 8X10X9 MM	
520	90458-0353		2	BUSHING, 8X10X8 MM	
530	321155-0062		8	FLANGE BUSHING, 6X8X6 MM	
540	90240-0289		2	FLANGE BUSHING, 10X12X6 MM	

Machine Type | Group Description | Used-In | Group Number | Page No

VOLUME FLAP CUTTING RIGHT

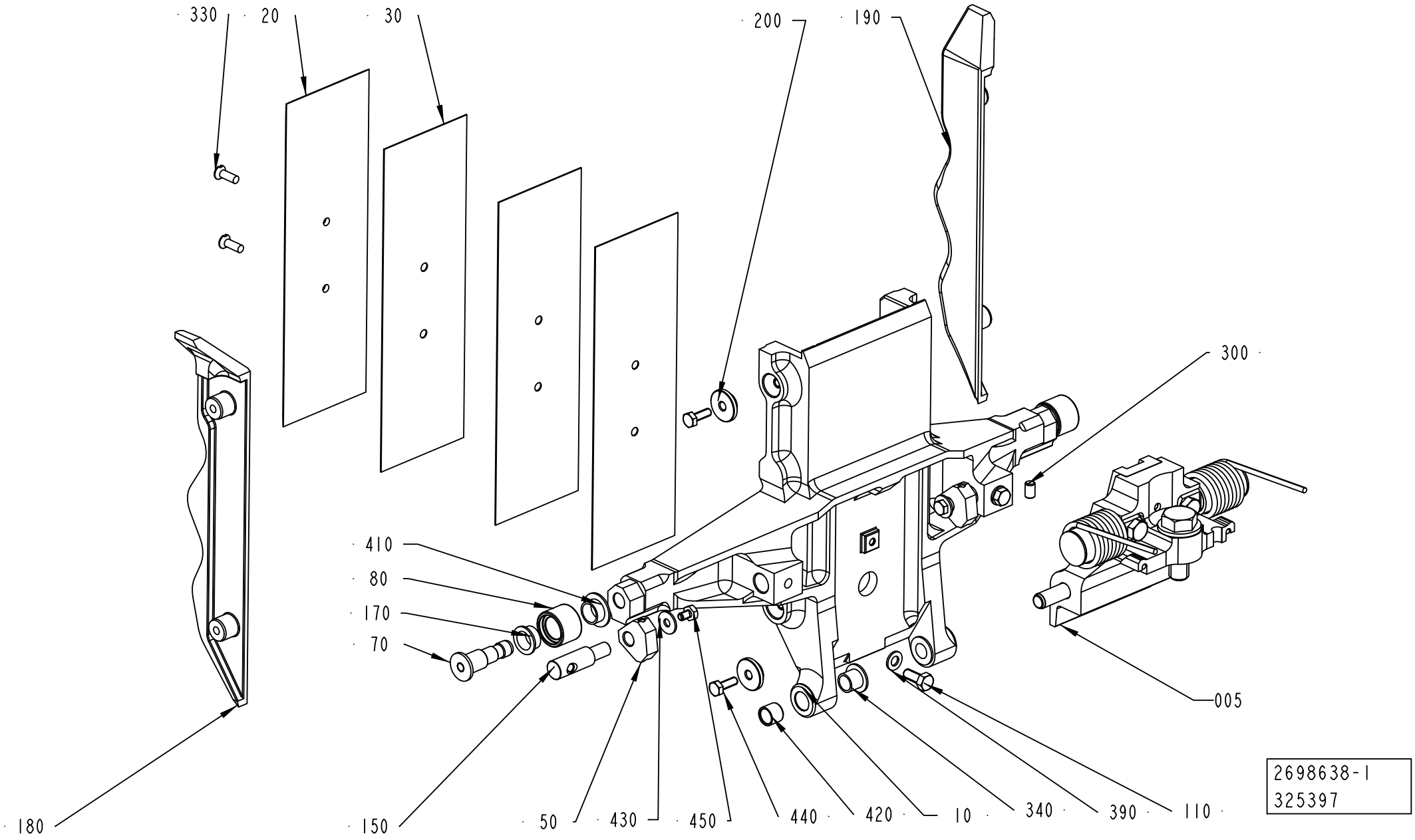

ECM: 326427 - 20080102
Group number: 2698638-0100
Assembly Drawing: 2698638-1_1_AB

Pos	Part No	UN	Qty	Description	Page No
A3/FLEX TGA 0750SQ					
010	2682187-0000		1	VOLUME FLAP	
020	2909851-0000		1	VOLUME BULGE	
030	2909852-0000		3	SHIM	
180	2682190-0000		1	FLAP	
190	2682191-0000		1	FLAP	
A3/FLEX TGA 1000SQ					
010	2660289-0000		1	VOLUME FLAP	
020	2660292-0000		1	VOLUME BULGE	
030	2660293-0000		3	VOLUME SHIM	
180	2682172-0000		1	FLAP	
190	2682173-0000		1	FLAP	
Common Parts					
005	2928238-0100		1	SHOCK ABSORBER	**4-103**
050	2928239-0000		2	HOLDER	
070	2868844-0000		2	AXLE PIN	
080	2660295-0000		2	ROLLER	
150	2594702-0000		2	SHAFT	
170	2660296-0000		2	BUSHING	
200	2682174-0000		4	WASHER	
300	312318-0323		2	SCREW ISO4029 M5X8 A4	
330	312145-0291		2	SCREW ISO 2009 MFS M4X12 A4	
340	90240-0260		2	FLANGE BUSHING, 8X10X9 MM	
350	312105-0327		2	SCREW M6S ISO 4017 M5X12 A480	
390	315105-0146		2	WASHER BRB 5,3X10 RFR	
410	90240-0289		2	FLANGE BUSHING, 10X12X6 MM	
420	90458-0353		2	BUSHING, 8X10X8 MM	
430	90005-0082		2	WASHER PLAIN ROUND 4,3(M4)/12,H=1	
440	312105-0291		4	SCREW M6S ISO 4017 M4X12 A470	

Pos	Part No	UN	Qty	Description	Page No

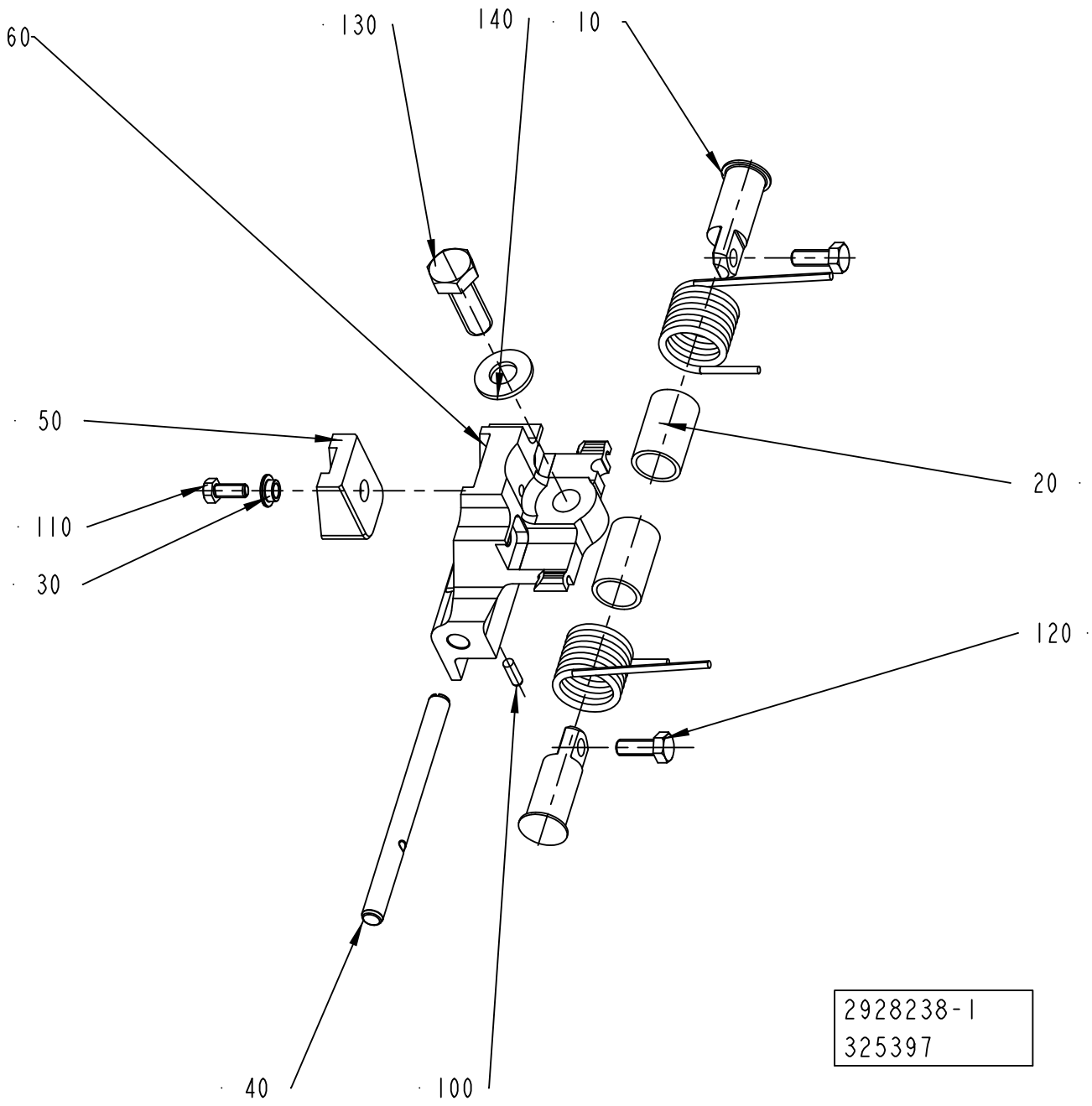
60
130
140
10
50
20
110
30
120
40
100
2928238-1
325397

ECM: 383386 - 20090402
Group number: 2928238-0100
Assembly Drawing: 2928238-1_1_AA

Pos	Part No	UN	Qty	Description	Page No
-					
010	1519811-0000		2	SHAFT	
020	1538521-0000		2	BUSHING	
030	2572197-0000		1	SPACER	
040	2649660-0000		1	SHAFT	
050	2649677-0000		1	DAMPER	
060	2928234-0004		1	HOLDER	
100	311103-0268		1	PARALLEL PIN ISO 2338 4M6X12 A1	
110	312105-0327		1	SCREW M6S ISO 4017 M5X12 A480	
120	312105-0368		2	SCREW M6S ISO 4017 M6X16 A480	
130	312105-0495		1	SCREW M6S ISO 4017 M10X30 A480	
140	315105-0173		1	WASHER BRB 10,5X22 RFR	
150	2922537-0000		1	SPRING	
160	2922536-0000		1	SPRING	

Pos	Part No	UN	Qty	Description	Page No

VOLUME FLAP CUTTING LEFT

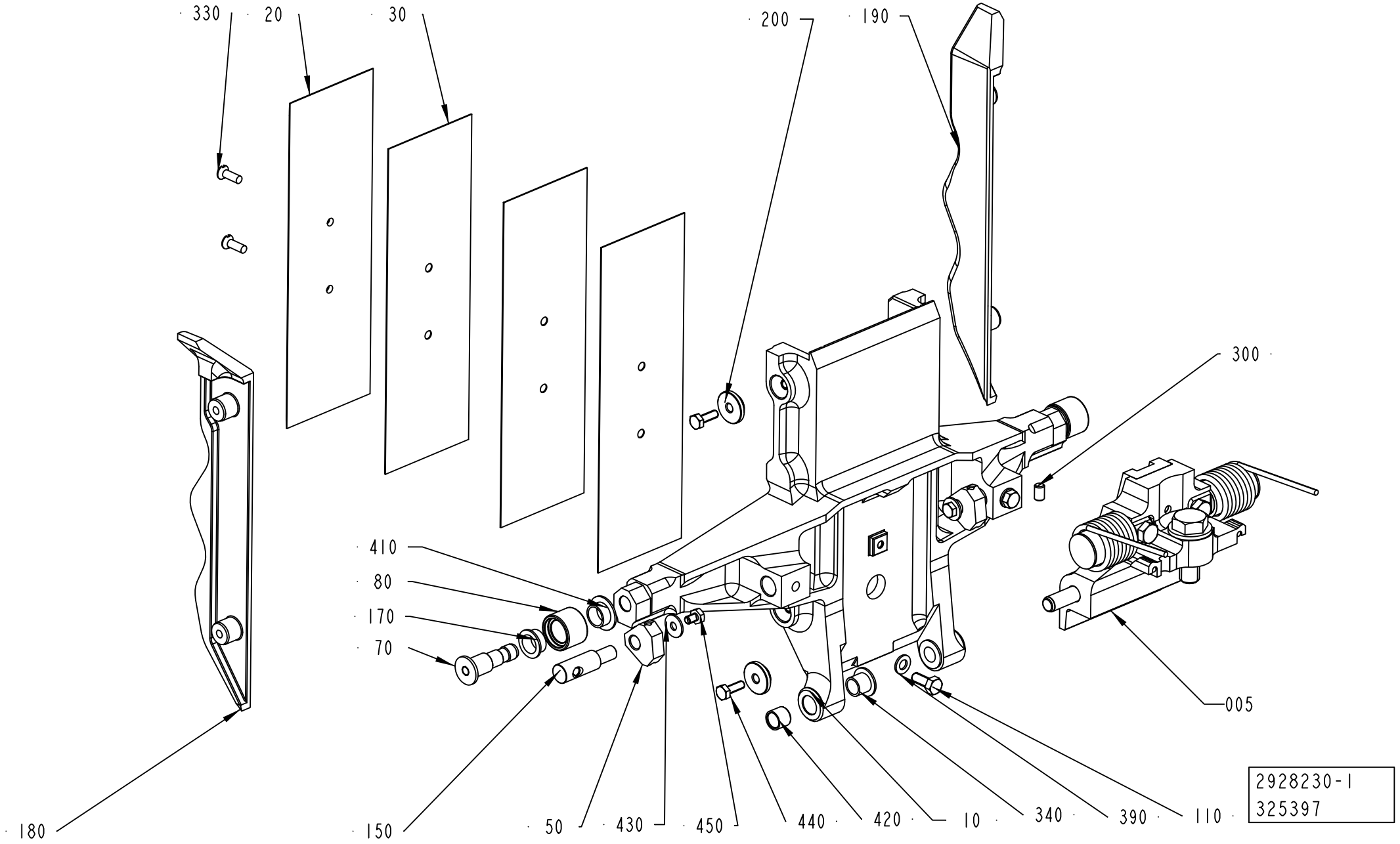

ECM: 326422 - 20080102
Group number: 2928230-0100
Assembly Drawing: 2928230-1_1_AA

Pos	Part No	UN	Qty	Description	Page No
A3/FLEX TGA 0750SQ					
010	2682187-0000		1	VOLUME FLAP	
020	2909851-0000		1	VOLUME BULGE	
030	2909852-0000		3	SHIM	
180	2682190-0000		1	FLAP	
190	2682191-0000		1	FLAP	
A3/FLEX TGA 1000SQ					
010	2660289-0000		1	VOLUME FLAP	
020	2660292-0000		1	VOLUME BULGE	
030	2660293-0000		3	VOLUME SHIM	
180	2682172-0000		1	FLAP	
190	2682173-0000		1	FLAP	
Common Parts					
005	2928238-0100		1	SHOCK ABSORBER	**4-103**
050	2928239-0000		2	HOLDER	
070	2868844-0000		2	AXLE PIN	
080	2660295-0000		2	ROLLER	
150	2594702-0000		2	SHAFT	
170	2660296-0000		2	BUSHING	
200	2682174-0000		4	WASHER	
300	312318-0323		2	SCREW ISO4029 M5X8 A4	
330	312145-0291		2	SCREW ISO 2009 MFS M4X12 A4	
340	90240-0260		2	FLANGE BUSHING, 8X10X9 MM	
350	312105-0327		2	SCREW M6S ISO 4017 M5X12 A480	
390	315105-0146		2	WASHER BRB 5,3X10 RFR	
410	90240-0289		2	FLANGE BUSHING, 10X12X6 MM	
420	90458-0353		2	BUSHING, 8X10X8 MM	
430	90005-0082		2	WASHER PLAIN ROUND 4,3(M4)/12,H=1	
440	312105-0291		4	SCREW M6S ISO 4017 M4X12 A470	

Pos	Part No	UN	Qty	Description	Page No

VOLUME FLAP PRESSURE RIGHT

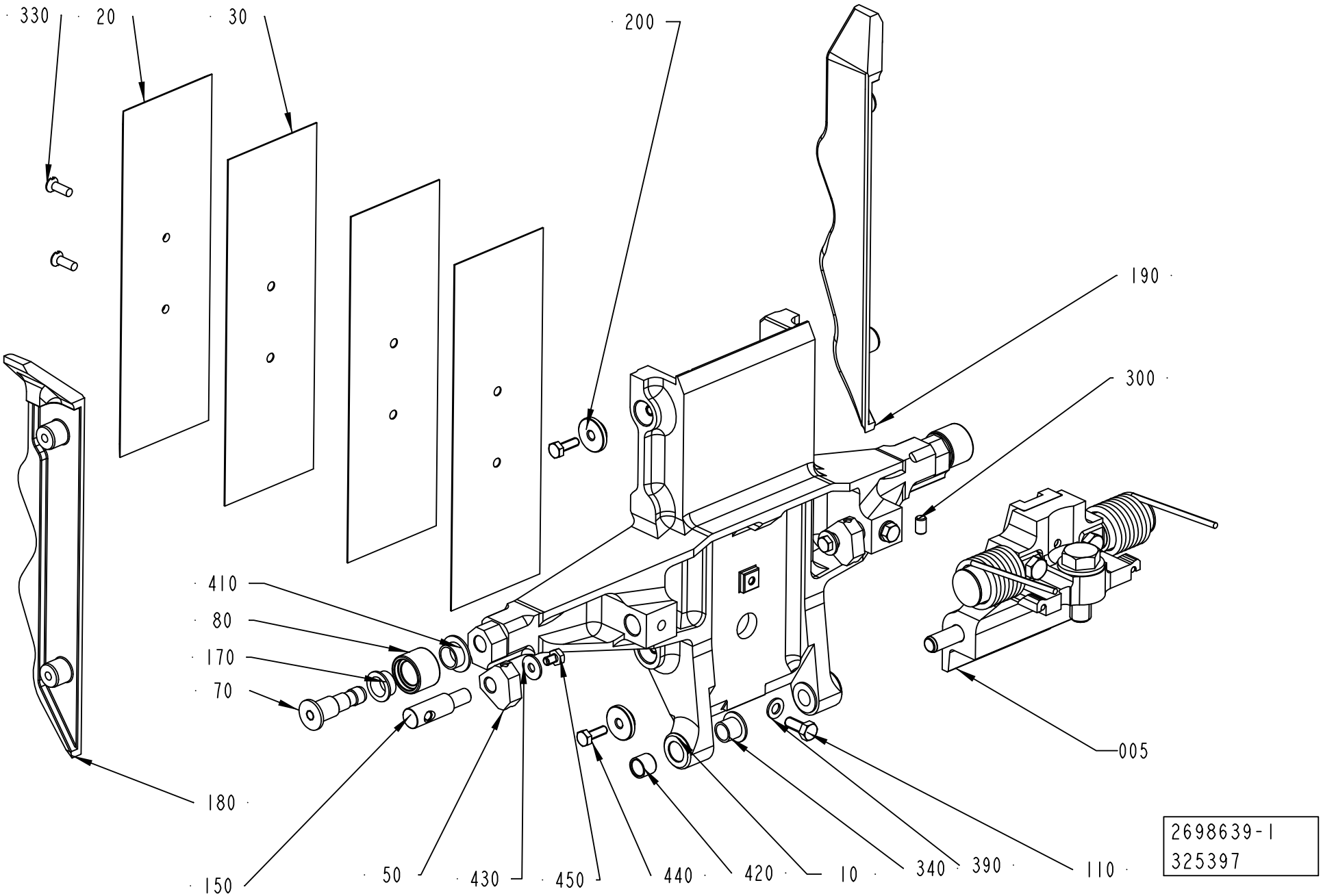

ECM: 326600 - 20080102
Group number: 2698639-0100
Assembly Drawing: 2698639-1_1_AB

Pos	Part No	UN	Qty	Description	Page No
A3/FLEX TGA 0750SQ					
010	2682187-0000		1	VOLUME FLAP	
020	2909851-0000		1	VOLUME BULGE	
030	2909852-0000		3	SHIM	
180	2682188-0000		1	FLAP	
190	2682189-0000		1	FLAP	
A3/FLEX TGA 1000SQ					
010	2660289-0000		1	VOLUME FLAP	
020	2660292-0000		1	VOLUME BULGE	
030	2660293-0000		3	VOLUME SHIM	
180	2660308-0000		1	FLAP	
190	2660309-0000		1	FLAP	
Common Parts					
005	2928236-0100		1	SHOCK ABSORBER	**4-109**
050	2928239-0000		2	HOLDER	
070	2594709-0000		2	AXLE PIN	
080	2660295-0000		2	ROLLER	
150	2594702-0000		2	SHAFT	
170	2660296-0000		2	BUSHING	
200	2682174-0000		4	WASHER	
300	312318-0287		2	SCREW ISO4029 M4X8 A4	
330	312145-0291		2	SCREW ISO 2009 MFS M4X12 A4	
340	90240-0260		2	FLANGE BUSHING, 8X10X9 MM	
350	312105-0327		2	SCREW M6S ISO 4017 M5X12 A480	
390	315105-0146		2	WASHER BRB 5,3X10 RFR	
410	90240-0289		2	FLANGE BUSHING, 10X12X6 MM	
420	90458-0353		2	BUSHING, 8X10X8 MM	
430	90005-0082		2	WASHER PLAIN ROUND 4,3(M4)/12,H=1	
440	312105-0291		4	SCREW M6S ISO 4017 M4X12 A470	

Pos	Part No	UN	Qty	Description	Page No

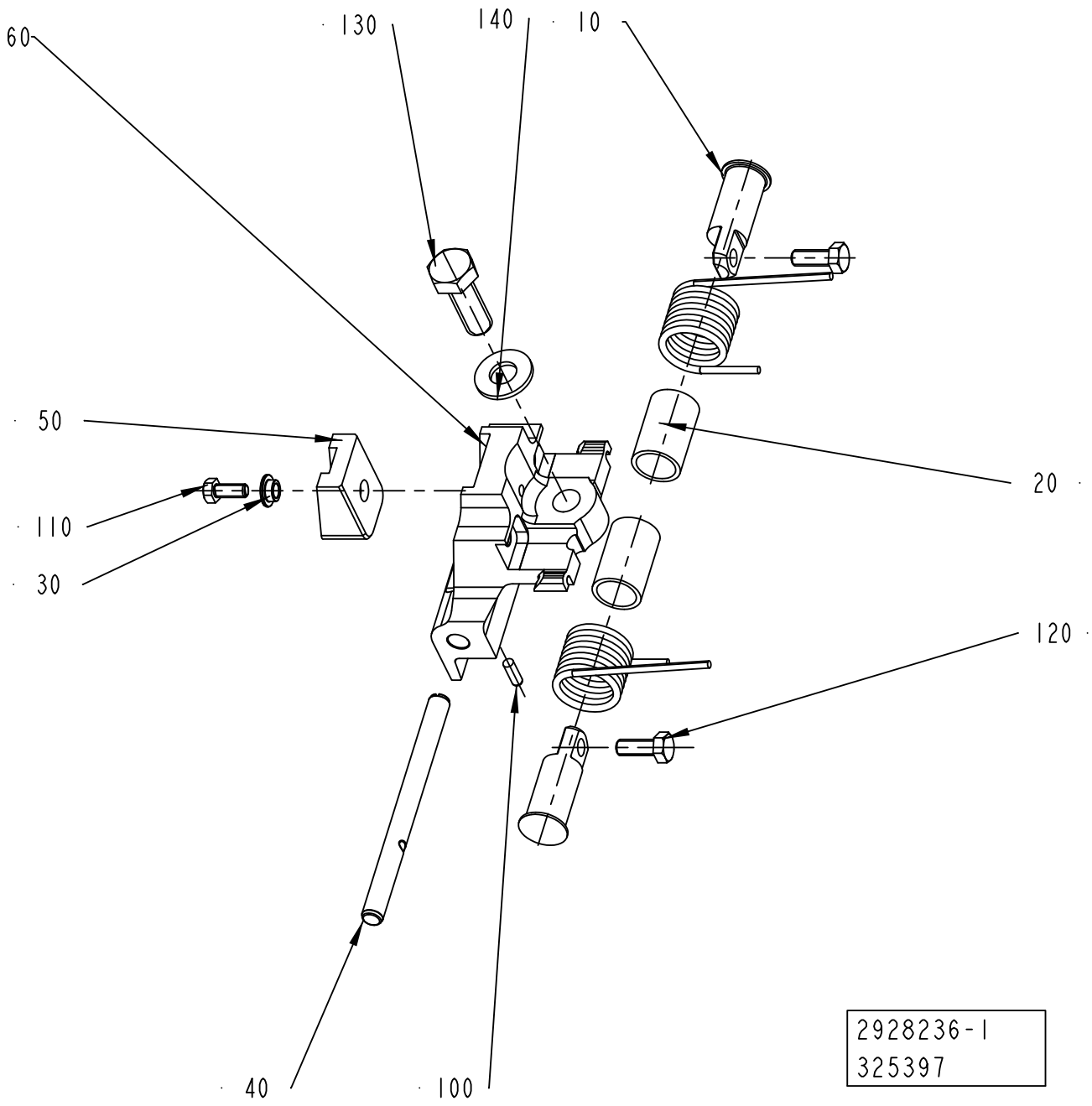
60
130
140
10
50
20
110
30
120
40
100
2928236-1
325397

ECM: 383388 - 20090402
Group number: 2928236-0100
Assembly Drawing: 2928236-1_1_AA

Pos	Part No	UN	Qty	Description	Page No
-					
010	1519811-0000		2	SHAFT	
020	1538521-0000		2	BUSHING	
030	2572197-0000		1	SPACER	
040	2649660-0000		1	SHAFT	
050	2649677-0000		1	DAMPER	
060	2928234-0002		1	HOLDER	
100	311103-0268		1	PARALLEL PIN ISO 2338 4M6X12 A1	
110	312105-0327		1	SCREW M6S ISO 4017 M5X12 A480	
120	312105-0368		2	SCREW M6S ISO 4017 M6X16 A480	
130	312105-0495		1	SCREW M6S ISO 4017 M10X30 A480	
140	315105-0173		1	WASHER BRB 10,5X22 RFR	
150	2922537-0000		1	SPRING	
160	2922536-0000		1	SPRING	

Pos	Part No	UN	Qty	Description	Page No

VOLUME FLAP PRESSURE LEFT

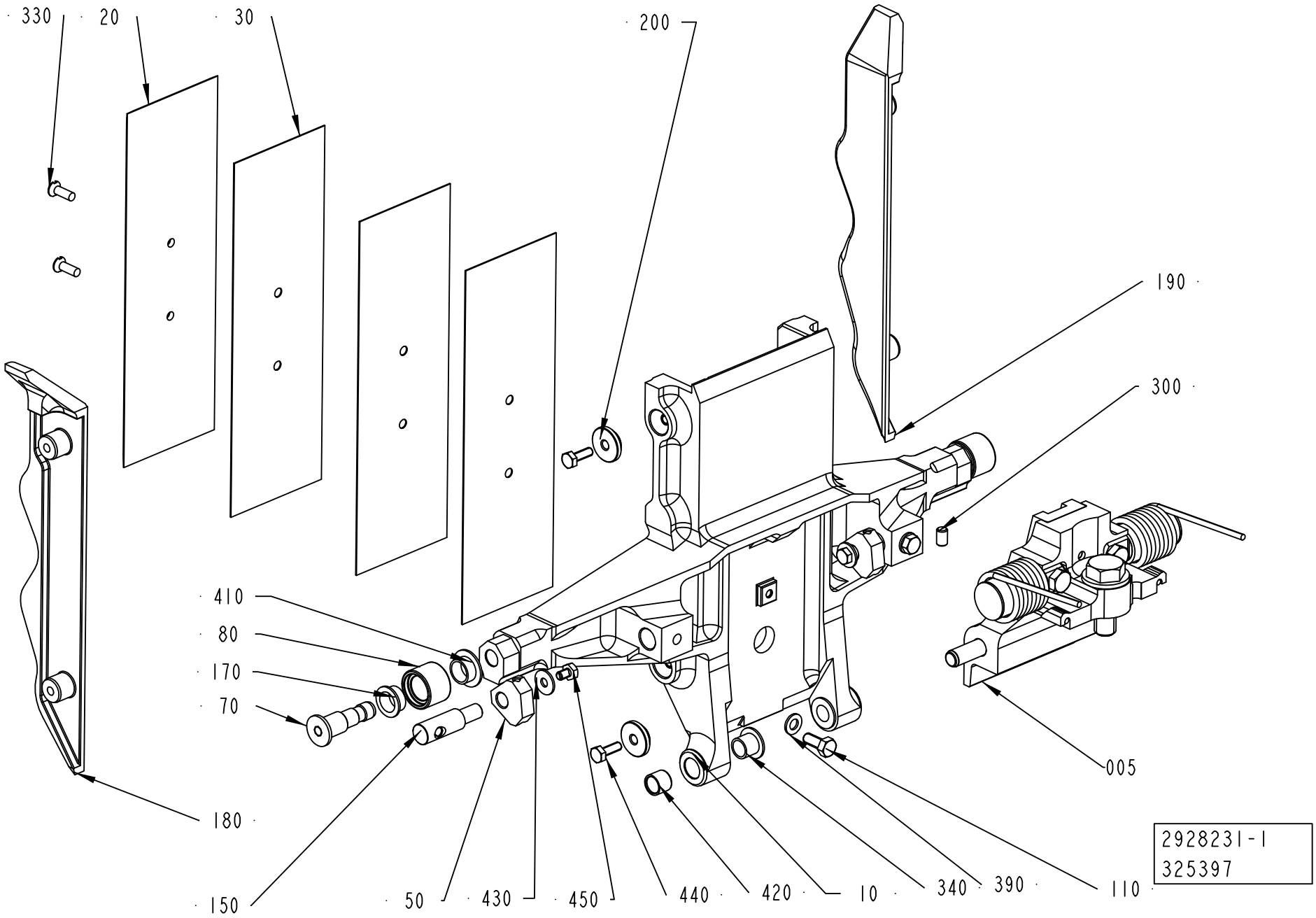

ECM: 326421 - 20080102
Group number: 2928231-0100
Assembly Drawing: 2928231-1_1_AA

Pos	Part No	UN	Qty	Description	Page No
A3/FLEX TGA 0750SQ					
010	2682187-0000		1	VOLUME FLAP	
020	2909851-0000		1	VOLUME BULGE	
030	2909852-0000		3	SHIM	
180	2682188-0000		1	FLAP	
190	2682189-0000		1	FLAP	
A3/FLEX TGA 1000SQ					
010	2660289-0000		1	VOLUME FLAP	
020	2660292-0000		1	VOLUME BULGE	
030	2660293-0000		3	VOLUME SHIM	
180	2660308-0000		1	FLAP	
190	2660309-0000		1	FLAP	
Common Parts					
005	2928237-0100		1	SHOCK ABSORBER	**4-113**
050	2928239-0000		2	HOLDER	
070	2594709-0000		2	AXLE PIN	
080	2660295-0000		2	ROLLER	
150	2594702-0000		2	SHAFT	
170	2660296-0000		2	BUSHING	
200	2682174-0000		4	WASHER	
300	312318-0287		2	SCREW ISO4029 M4X8 A4	
330	312145-0291		2	SCREW ISO 2009 MFS M4X12 A4	
340	90240-0260		2	FLANGE BUSHING, 8X10X9 MM	
350	312105-0327		2	SCREW M6S ISO 4017 M5X12 A480	
390	315105-0146		2	WASHER BRB 5,3X10 RFR	
410	90240-0289		2	FLANGE BUSHING, 10X12X6 MM	
420	90458-0353		2	BUSHING, 8X10X8 MM	
430	90005-0082		2	WASHER PLAIN ROUND 4,3(M4)/12,H=1	
440	312105-0291		4	SCREW M6S ISO 4017 M4X12 A470	

Pos	Part No	UN	Qty	Description	Page No

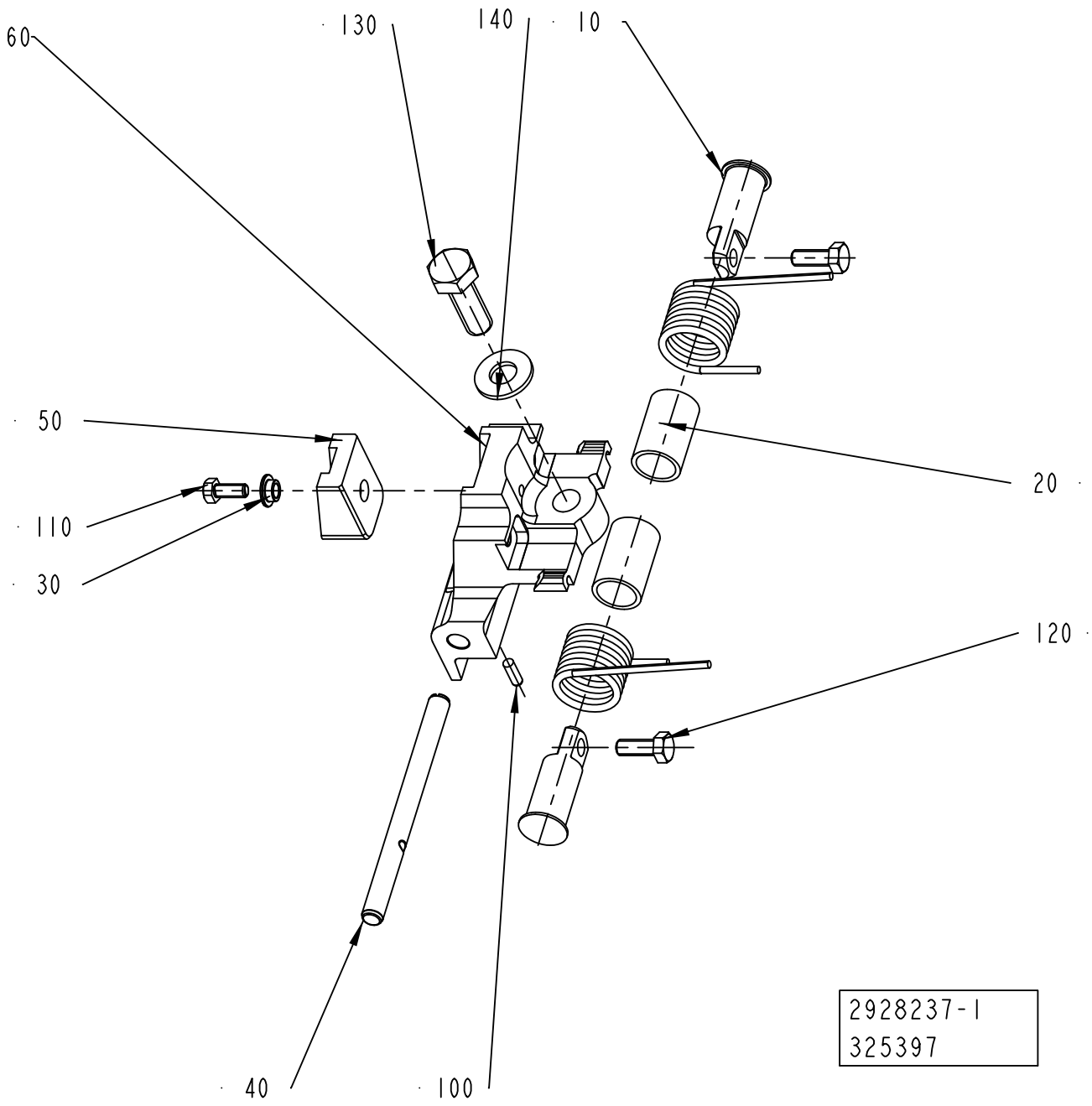
60
130
140
10
50
20
110
30
120
40
100
2928237-1
325397

ECM: 383387 - 20090402
Group number: 2928237-0100
Assembly Drawing: 2928237-1_1_AA

Pos	Part No	UN	Qty	Description	Page No
-					
010	1519811-0000		2	SHAFT	
020	1538521-0000		2	BUSHING	
030	2572197-0000		1	SPACER	
040	2649660-0000		1	SHAFT	
050	2649677-0000		1	DAMPER	
060	2928234-0003		1	HOLDER	
100	311103-0268		1	PARALLEL PIN ISO 2338 4M6X12 A1	
110	312105-0327		1	SCREW M6S ISO 4017 M5X12 A480	
120	312105-0368		2	SCREW M6S ISO 4017 M6X16 A480	
130	312105-0495		1	SCREW M6S ISO 4017 M10X30 A480	
140	315105-0173		1	WASHER BRB 10,5X22 RFR	
150	2922537-0000		1	SPRING	
160	2922536-0000		1	SPRING	

Pos	Part No	UN	Qty	Description	Page No

CARRIER PRESSURE LEFT

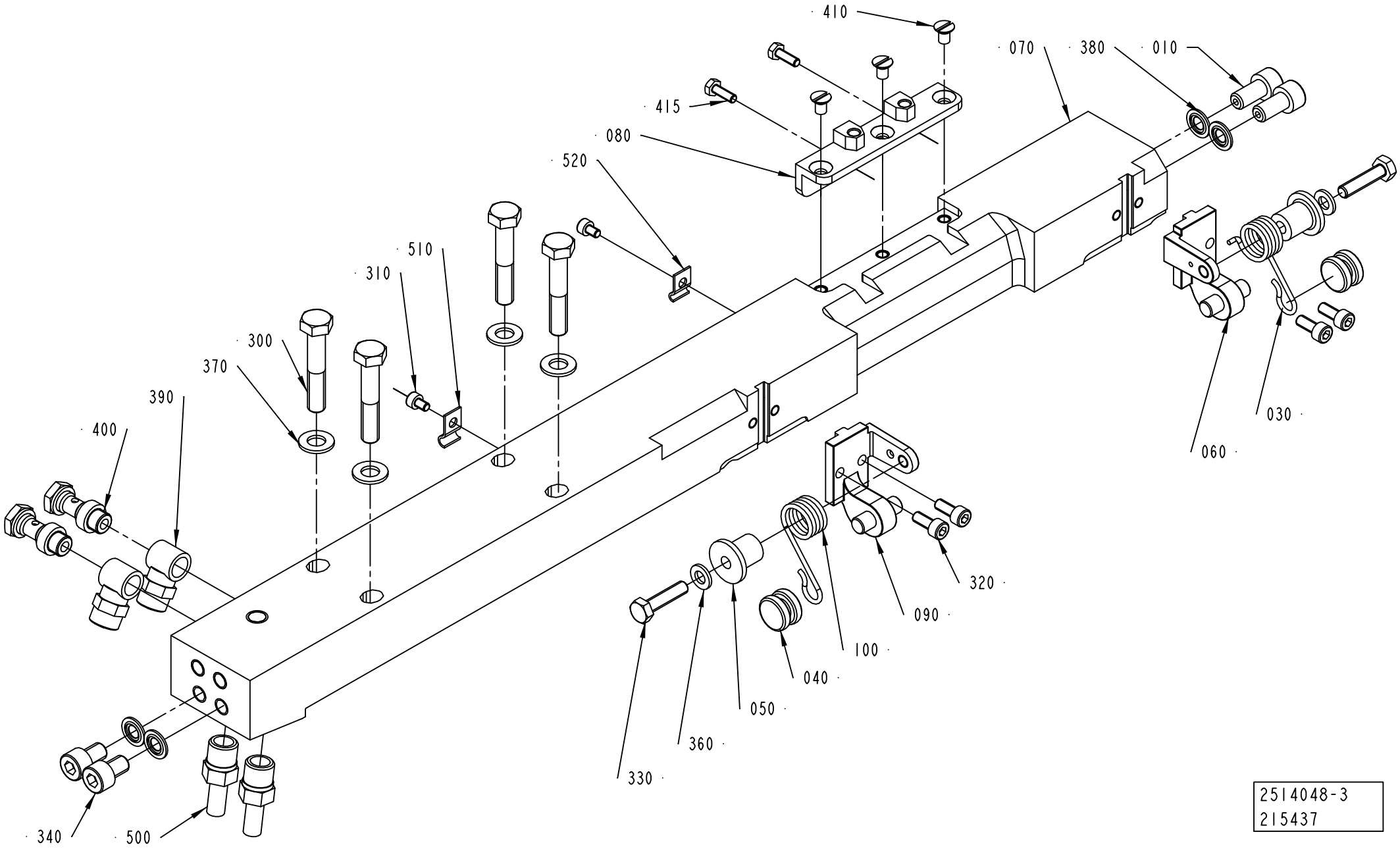

2514048-3
215437

ECM: 998080 - 20081001
Group number: 2514048-0200
Assembly Drawing: 2514048-3_1_AB

This list covers pages from 4-114 to 4-121

Pos	Part No	UN	Qty	Description	Page No
A3/FLEX NOQC (See drawing on page: 4-116)					
070	2514049-0000		1	CARRIER	
310	312115-0285		2	SCREW ISO4762 M4X6 A4 80	
510	90165-0056		1	PIPE CLIP FOR TUBE D=4 MM	
520	90165-0058		1	PIPE CLIP FOR TUBE D=2,5 MM	
A3/FLEX TBA 0200M QC, A3/FLEX TBA 0250S QC (See drawing on page: 4-118)					
070	2514045-0000		1	CARRIER	
080	2641225-0000		1	INSERT	
410	312145-0323		3	SCREW ISO 2009 MFS M5X8 A4	
A3/FLEX TBA 0500B QC, A3/FLEX TBA 1000B QC, A3/FLEX TBA 0250B QC, A3/FLEX TBA 0200B QC, A3/FLEX TBA 0330S QC, A3/FLEX TPA 0200SQ QC, A3/FLEX TPA 0250SQ QC, A3/FLEX TBA 0250SQ QC, A3/FLEX TBA 0200SQ QC (See drawing on page: 4-118)					
070	2514045-0000		1	CARRIER	
080	1549312-0000		1	INSERT	
410	312145-0323		3	SCREW ISO 2009 MFS M5X8 A4	
A3/FLEX TBA 1890S QC, A3/FLEX TBA 2000S QC, A3/FLEX TBA 1400B (See drawing on page: 4-116)					
070	2566340-0000		1	CARRIER	
310	312115-0285		2	SCREW ISO4762 M4X6 A4 80	
510	90165-0056		1	PIPE CLIP FOR TUBE D=4 MM	
520	90165-0058		1	PIPE CLIP FOR TUBE D=2,5 MM	
A3/FLEX TGA 1000SQ, A3/FLEX TGA 0500SQ, A3/FLEX TGA 0750SQ (See drawing on page: 4-120)					
070	2594712-0000		1	CARRIER	
540	311103-0308		1	PARALLEL PIN ISO 2338 5M6X16 A1	
700	90153-0053		1	ADHESIVE, LOCTITE 648 TEMP 150`C 50ML	
A3/FLEX TPA 1000SQ QC, A3/FLEX TPA 0750SQ QC, A3/FLEX TBA 0500SQ QC, A3/FLEX TBA 1000SQ QC (See drawing on page: 4-114)					
070	2647115-0000		1	CARRIER	
080	2647114-0000		1	INSERT	
310	312115-0285		2	SCREW ISO4762 M4X6 A4 80	
410	312145-0323		3	SCREW ISO 2009 MFS M5X8 A4	
415	312105-0291		2	SCREW M6S ISO 4017 M4X12 A470	
510	90165-0056		1	PIPE CLIP FOR TUBE D=4 MM	
520	90165-0058		1	PIPE CLIP FOR TUBE D=2,5 MM	
Common Parts					
010	1036343-0000		2	SCREW	
030	2547589-0000		1	SPRING	
040	2530296-0000		2	ROLLER	
050	2532531-0000		2	ROLLER	
060	2530293-0000		1	BRACKET	
090	2530292-0000		1	BRACKET	
100	2547588-0000		1	SPRING	
300	312105-0460		4	SCREW M6S ISO 4014 M8X45 A480	
320	312115-0327		4	SCREW ISO4762 M5X12 A4 80	
330	312105-0372		2	SCREW M6S ISO 4017 M6X25 A480	
340	312115-0447		2	SCREW ISO4762 M8X12 A4 80	
360	315105-0153		2	WASHER BRB 6,4X12 RFR	
370	315105-0165		4	WASHER BRB 8,4X16 RFR	
380	315211-0104		4	BONDED SEAL SS/NBR90 M8	
390	342980-0121		2	BANJO-CONNECTION,RING 8/6-G1/8	
400	342980-0303		2	BANJO-HOLLOW BOLT COUPL,EXT.THR.01-G1/8	
500	90030-0065		2	PIPE CONNECTION	

Machine Type | Group Description | Used-In | Group Number | Page No

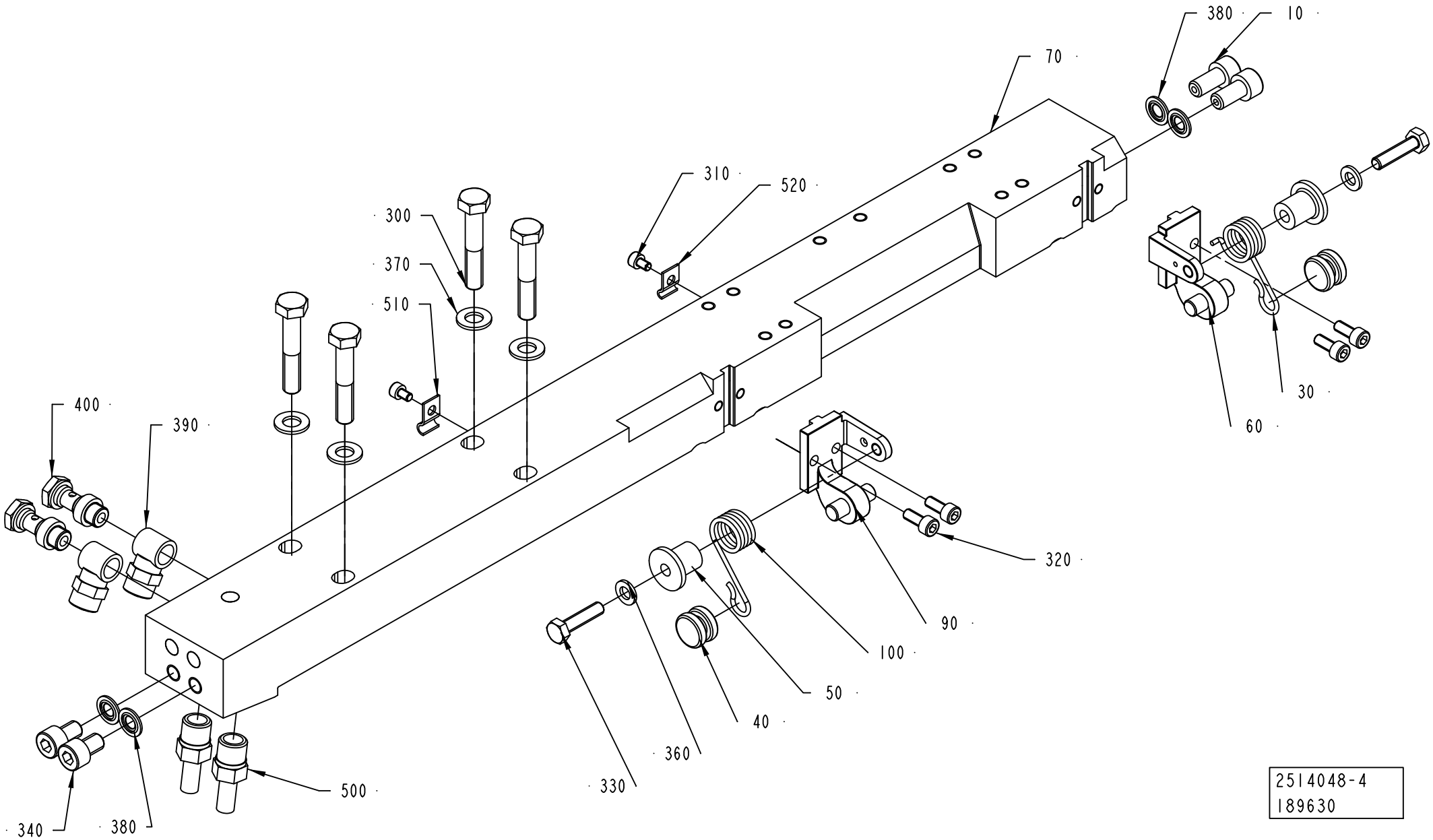
380
10
70
310
520
300
370
510
400
390
30
60
320
90
100
50
40
360
330
500
340
380
2514048-4
189630

ECM: 998080 - 20081001
Group number: 2514048-0200
Assembly Drawing: 2514048-4_1_AA

This list covers pages from 4-114 to 4-121

Pos	Part No	UN	Qty	Description	Page No
A3/FLEX NOQC (See drawing on page: 4-116)					
070	2514049-0000		1	CARRIER	
310	312115-0285		2	SCREW ISO4762 M4X6 A4 80	
510	90165-0056		1	PIPE CLIP FOR TUBE D=4 MM	
520	90165-0058		1	PIPE CLIP FOR TUBE D=2,5 MM	
A3/FLEX TBA 0200M QC, A3/FLEX TBA 0250S QC (See drawing on page: 4-118)					
070	2514045-0000		1	CARRIER	
080	2641225-0000		1	INSERT	
410	312145-0323		3	SCREW ISO 2009 MFS M5X8 A4	
A3/FLEX TBA 0500B QC, A3/FLEX TBA 1000B QC, A3/FLEX TBA 0250B QC, A3/FLEX TBA 0200B QC, A3/FLEX TBA 0330S QC, A3/FLEX TPA 0200SQ QC, A3/FLEX TPA 0250SQ QC, A3/FLEX TBA 0250SQ QC, A3/FLEX TBA 0200SQ QC (See drawing on page: 4-118)					
070	2514045-0000		1	CARRIER	
080	1549312-0000		1	INSERT	
410	312145-0323		3	SCREW ISO 2009 MFS M5X8 A4	
A3/FLEX TBA 1890S QC, A3/FLEX TBA 2000S QC, A3/FLEX TBA 1400B (See drawing on page: 4-116)					
070	2566340-0000		1	CARRIER	
310	312115-0285		2	SCREW ISO4762 M4X6 A4 80	
510	90165-0056		1	PIPE CLIP FOR TUBE D=4 MM	
520	90165-0058		1	PIPE CLIP FOR TUBE D=2,5 MM	
A3/FLEX TGA 1000SQ, A3/FLEX TGA 0500SQ, A3/FLEX TGA 0750SQ (See drawing on page: 4-120)					
070	2594712-0000		1	CARRIER	
540	311103-0308		1	PARALLEL PIN ISO 2338 5M6X16 A1	
700	90153-0053		1	ADHESIVE, LOCTITE 648 TEMP 150`C 50ML	
A3/FLEX TPA 1000SQ QC, A3/FLEX TPA 0750SQ QC, A3/FLEX TBA 0500SQ QC, A3/FLEX TBA 1000SQ QC (See drawing on page: 4-114)					
070	2647115-0000		1	CARRIER	
080	2647114-0000		1	INSERT	
310	312115-0285		2	SCREW ISO4762 M4X6 A4 80	
410	312145-0323		3	SCREW ISO 2009 MFS M5X8 A4	
415	312105-0291		2	SCREW M6S ISO 4017 M4X12 A470	
510	90165-0056		1	PIPE CLIP FOR TUBE D=4 MM	
520	90165-0058		1	PIPE CLIP FOR TUBE D=2,5 MM	
Common Parts					
010	1036343-0000		2	SCREW	
030	2547589-0000		1	SPRING	
040	2530296-0000		2	ROLLER	
050	2532531-0000		2	ROLLER	
060	2530293-0000		1	BRACKET	
090	2530292-0000		1	BRACKET	
100	2547588-0000		1	SPRING	
300	312105-0460		4	SCREW M6S ISO 4014 M8X45 A480	
320	312115-0327		4	SCREW ISO4762 M5X12 A4 80	
330	312105-0372		2	SCREW M6S ISO 4017 M6X25 A480	
340	312115-0447		2	SCREW ISO4762 M8X12 A4 80	
360	315105-0153		2	WASHER BRB 6,4X12 RFR	
370	315105-0165		4	WASHER BRB 8,4X16 RFR	
380	315211-0104		4	BONDED SEAL SS/NBR90 M8	
390	342980-0121		2	BANJO-CONNECTION,RING 8/6-G1/8	
400	342980-0303		2	BANJO-HOLLOW BOLT COUPL,EXT.THR.01-G1/8	
500	90030-0065		2	PIPE CONNECTION	

Machine Type | Group Description | Used-In | Group Number | Page No

CARRIER PRESSURE LEFT

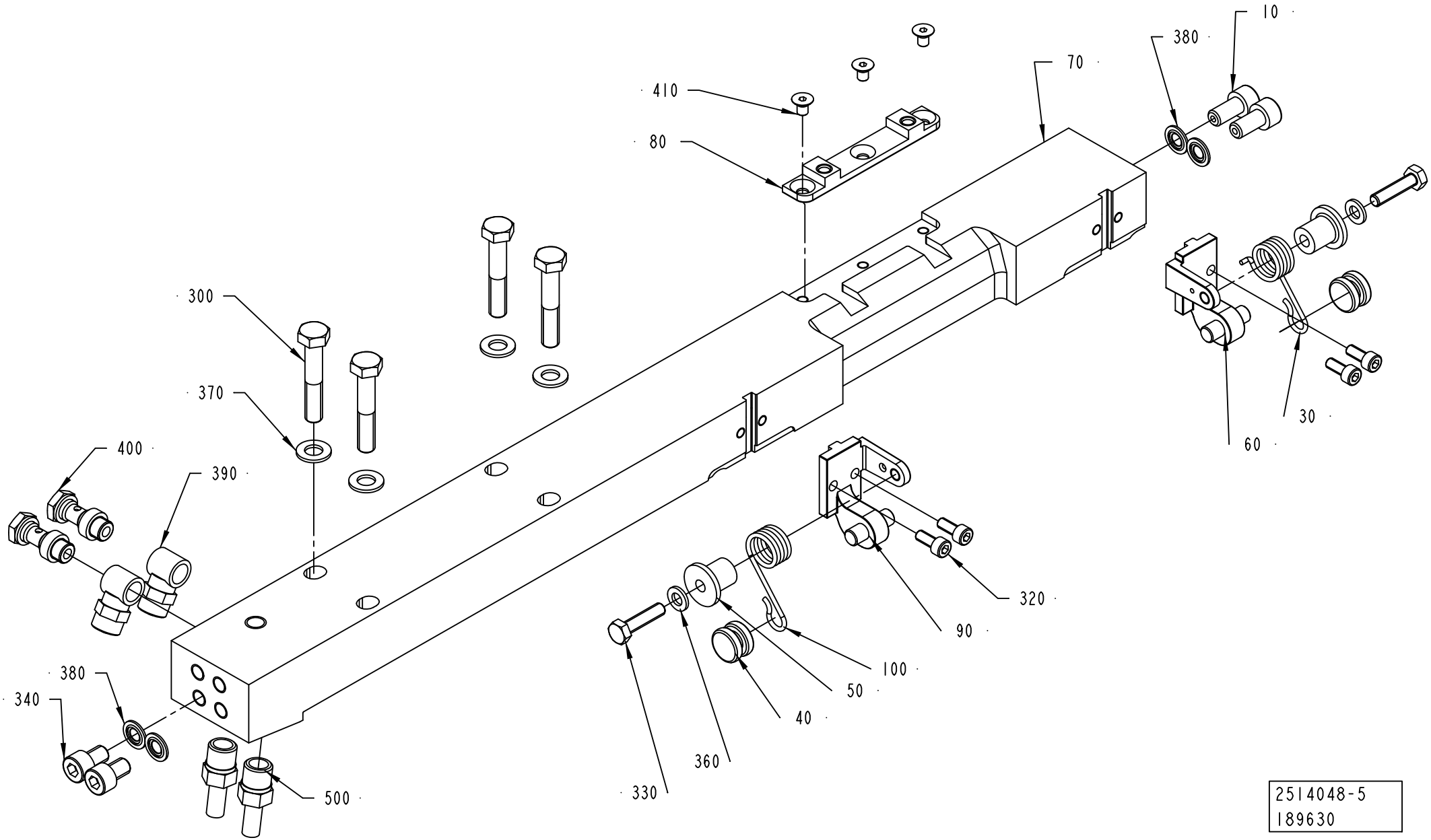

ECM: 998080 - 20081001
Group number: 2514048-0200
Assembly Drawing: 2514048-5_1_AA

This list covers pages from 4-114 to 4-121

Pos	Part No	UN	Qty	Description	Page No
A3/FLEX NOQC (See drawing on page: 4-116)					
070	2514049-0000		1	CARRIER	
310	312115-0285		2	SCREW ISO4762 M4X6 A4 80	
510	90165-0056		1	PIPE CLIP FOR TUBE D=4 MM	
520	90165-0058		1	PIPE CLIP FOR TUBE D=2,5 MM	
A3/FLEX TBA 0200M QC, A3/FLEX TBA 0250S QC (See drawing on page: 4-118)					
070	2514045-0000		1	CARRIER	
080	2641225-0000		1	INSERT	
410	312145-0323		3	SCREW ISO 2009 MFS M5X8 A4	
A3/FLEX TBA 0500B QC, A3/FLEX TBA 1000B QC, A3/FLEX TBA 0250B QC, A3/FLEX TBA 0200B QC, A3/FLEX TBA 0330S QC, A3/FLEX TPA 0200SQ QC, A3/FLEX TPA 0250SQ QC, A3/FLEX TBA 0250SQ QC, A3/FLEX TBA 0200SQ QC (See drawing on page: 4-118)					
070	2514045-0000		1	CARRIER	
080	1549312-0000		1	INSERT	
410	312145-0323		3	SCREW ISO 2009 MFS M5X8 A4	
A3/FLEX TBA 1890S QC, A3/FLEX TBA 2000S QC, A3/FLEX TBA 1400B (See drawing on page: 4-116)					
070	2566340-0000		1	CARRIER	
310	312115-0285		2	SCREW ISO4762 M4X6 A4 80	
510	90165-0056		1	PIPE CLIP FOR TUBE D=4 MM	
520	90165-0058		1	PIPE CLIP FOR TUBE D=2,5 MM	
A3/FLEX TGA 1000SQ, A3/FLEX TGA 0500SQ, A3/FLEX TGA 0750SQ (See drawing on page: 4-120)					
070	2594712-0000		1	CARRIER	
540	311103-0308		1	PARALLEL PIN ISO 2338 5M6X16 A1	
700	90153-0053		1	ADHESIVE, LOCTITE 648 TEMP 150`C 50ML	
A3/FLEX TPA 1000SQ QC, A3/FLEX TPA 0750SQ QC, A3/FLEX TBA 0500SQ QC, A3/FLEX TBA 1000SQ QC (See drawing on page: 4-114)					
070	2647115-0000		1	CARRIER	
080	2647114-0000		1	INSERT	
310	312115-0285		2	SCREW ISO4762 M4X6 A4 80	
410	312145-0323		3	SCREW ISO 2009 MFS M5X8 A4	
415	312105-0291		2	SCREW M6S ISO 4017 M4X12 A470	
510	90165-0056		1	PIPE CLIP FOR TUBE D=4 MM	
520	90165-0058		1	PIPE CLIP FOR TUBE D=2,5 MM	
Common Parts					
010	1036343-0000		2	SCREW	
030	2547589-0000		1	SPRING	
040	2530296-0000		2	ROLLER	
050	2532531-0000		2	ROLLER	
060	2530293-0000		1	BRACKET	
090	2530292-0000		1	BRACKET	
100	2547588-0000		1	SPRING	
300	312105-0460		4	SCREW M6S ISO 4014 M8X45 A480	
320	312115-0327		4	SCREW ISO4762 M5X12 A4 80	
330	312105-0372		2	SCREW M6S ISO 4017 M6X25 A480	
340	312115-0447		2	SCREW ISO4762 M8X12 A4 80	
360	315105-0153		2	WASHER BRB 6,4X12 RFR	
370	315105-0165		4	WASHER BRB 8,4X16 RFR	
380	315211-0104		4	BONDED SEAL SS/NBR90 M8	
390	342980-0121		2	BANJO-CONNECTION,RING 8/6-G1/8	
400	342980-0303		2	BANJO-HOLLOW BOLT COUPL,EXT.THR.01-G1/8	
500	90030-0065		2	PIPE CONNECTION	

Machine Type | Group Description | Used-In | Group Number | Page No

CARRIER PRESSURE LEFT

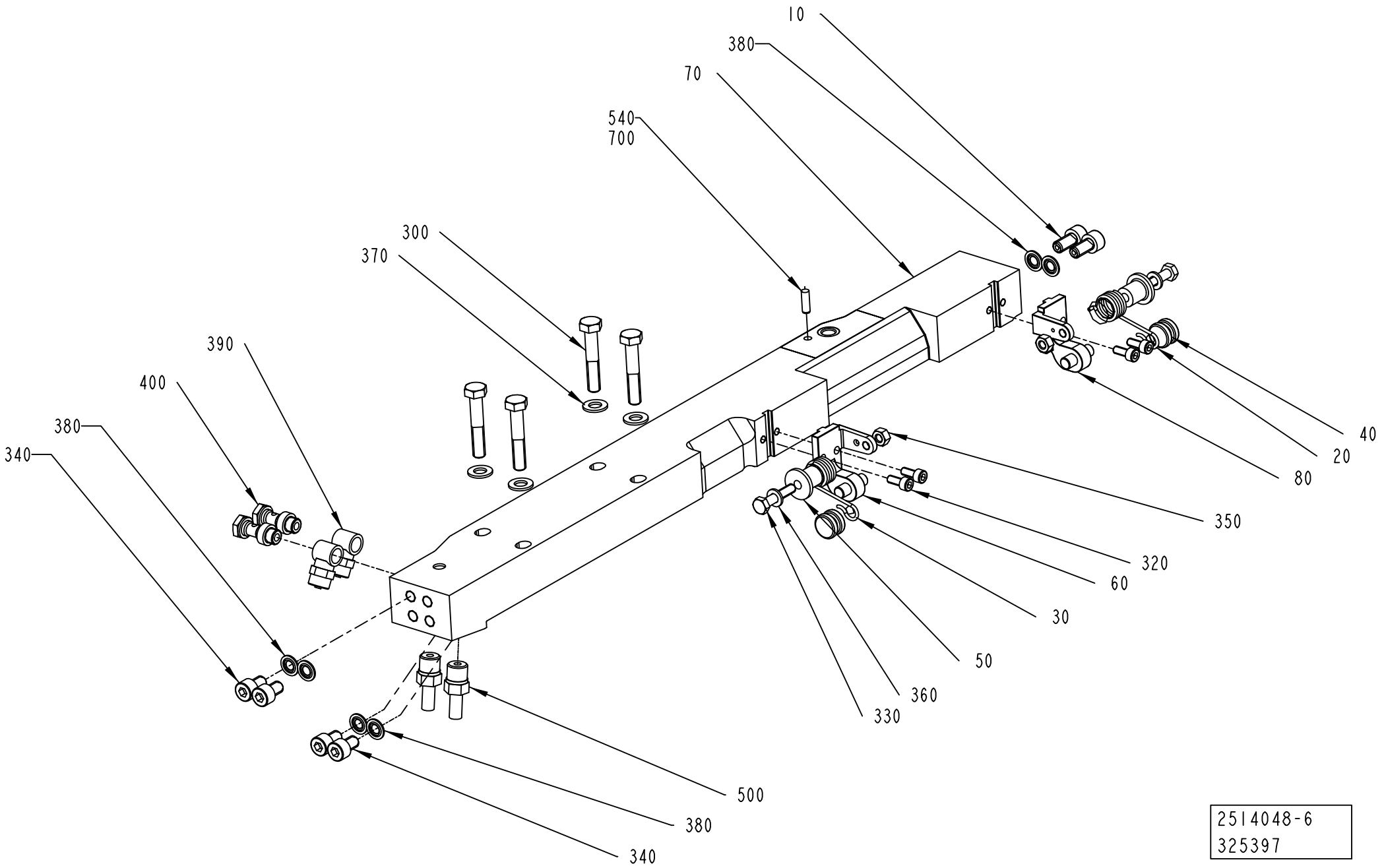

2514048-6
325397

ECM: 998080 - 20081001
Group number: 2514048-0200
Assembly Drawing: 2514048-6_1_AB

This list covers pages from 4-114 to 4-121

Pos	Part No	UN	Qty	Description	Page No
A3/FLEX NOQC (See drawing on page: 4-116)					
070	2514049-0000		1	CARRIER	
310	312115-0285		2	SCREW ISO4762 M4X6 A4 80	
510	90165-0056		1	PIPE CLIP FOR TUBE D=4 MM	
520	90165-0058		1	PIPE CLIP FOR TUBE D=2,5 MM	
A3/FLEX TBA 0200M QC, A3/FLEX TBA 0250S QC (See drawing on page: 4-118)					
070	2514045-0000		1	CARRIER	
080	2641225-0000		1	INSERT	
410	312145-0323		3	SCREW ISO 2009 MFS M5X8 A4	
A3/FLEX TBA 0500B QC, A3/FLEX TBA 1000B QC, A3/FLEX TBA 0250B QC, A3/FLEX TBA 0200B QC, A3/FLEX TBA 0330S QC, A3/FLEX TPA 0200SQ QC, A3/FLEX TPA 0250SQ QC, A3/FLEX TBA 0250SQ QC, A3/FLEX TBA 0200SQ QC (See drawing on page: 4-118)					
070	2514045-0000		1	CARRIER	
080	1549312-0000		1	INSERT	
410	312145-0323		3	SCREW ISO 2009 MFS M5X8 A4	
A3/FLEX TBA 1890S QC, A3/FLEX TBA 2000S QC, A3/FLEX TBA 1400B (See drawing on page: 4-116)					
070	2566340-0000		1	CARRIER	
310	312115-0285		2	SCREW ISO4762 M4X6 A4 80	
510	90165-0056		1	PIPE CLIP FOR TUBE D=4 MM	
520	90165-0058		1	PIPE CLIP FOR TUBE D=2,5 MM	
A3/FLEX TGA 1000SQ, A3/FLEX TGA 0500SQ, A3/FLEX TGA 0750SQ (See drawing on page: 4-120)					
070	2594712-0000		1	CARRIER	
540	311103-0308		1	PARALLEL PIN ISO 2338 5M6X16 A1	
700	90153-0053		1	ADHESIVE, LOCTITE 648 TEMP 150`C 50ML	
A3/FLEX TPA 1000SQ QC, A3/FLEX TPA 0750SQ QC, A3/FLEX TBA 0500SQ QC, A3/FLEX TBA 1000SQ QC (See drawing on page: 4-114)					
070	2647115-0000		1	CARRIER	
080	2647114-0000		1	INSERT	
310	312115-0285		2	SCREW ISO4762 M4X6 A4 80	
410	312145-0323		3	SCREW ISO 2009 MFS M5X8 A4	
415	312105-0291		2	SCREW M6S ISO 4017 M4X12 A470	
510	90165-0056		1	PIPE CLIP FOR TUBE D=4 MM	
520	90165-0058		1	PIPE CLIP FOR TUBE D=2,5 MM	
Common Parts					
010	1036343-0000		2	SCREW	
030	2547589-0000		1	SPRING	
040	2530296-0000		2	ROLLER	
050	2532531-0000		2	ROLLER	
060	2530293-0000		1	BRACKET	
090	2530292-0000		1	BRACKET	
100	2547588-0000		1	SPRING	
300	312105-0460		4	SCREW M6S ISO 4014 M8X45 A480	
320	312115-0327		4	SCREW ISO4762 M5X12 A4 80	
330	312105-0372		2	SCREW M6S ISO 4017 M6X25 A480	
340	312115-0447		2	SCREW ISO4762 M8X12 A4 80	
360	315105-0153		2	WASHER BRB 6,4X12 RFR	
370	315105-0165		4	WASHER BRB 8,4X16 RFR	
380	315211-0104		4	BONDED SEAL SS/NBR90 M8	
390	342980-0121		2	BANJO-CONNECTION,RING 8/6-G1/8	
400	342980-0303		2	BANJO-HOLLOW BOLT COUPL,EXT.THR.01-G1/8	
500	90030-0065		2	PIPE CONNECTION	

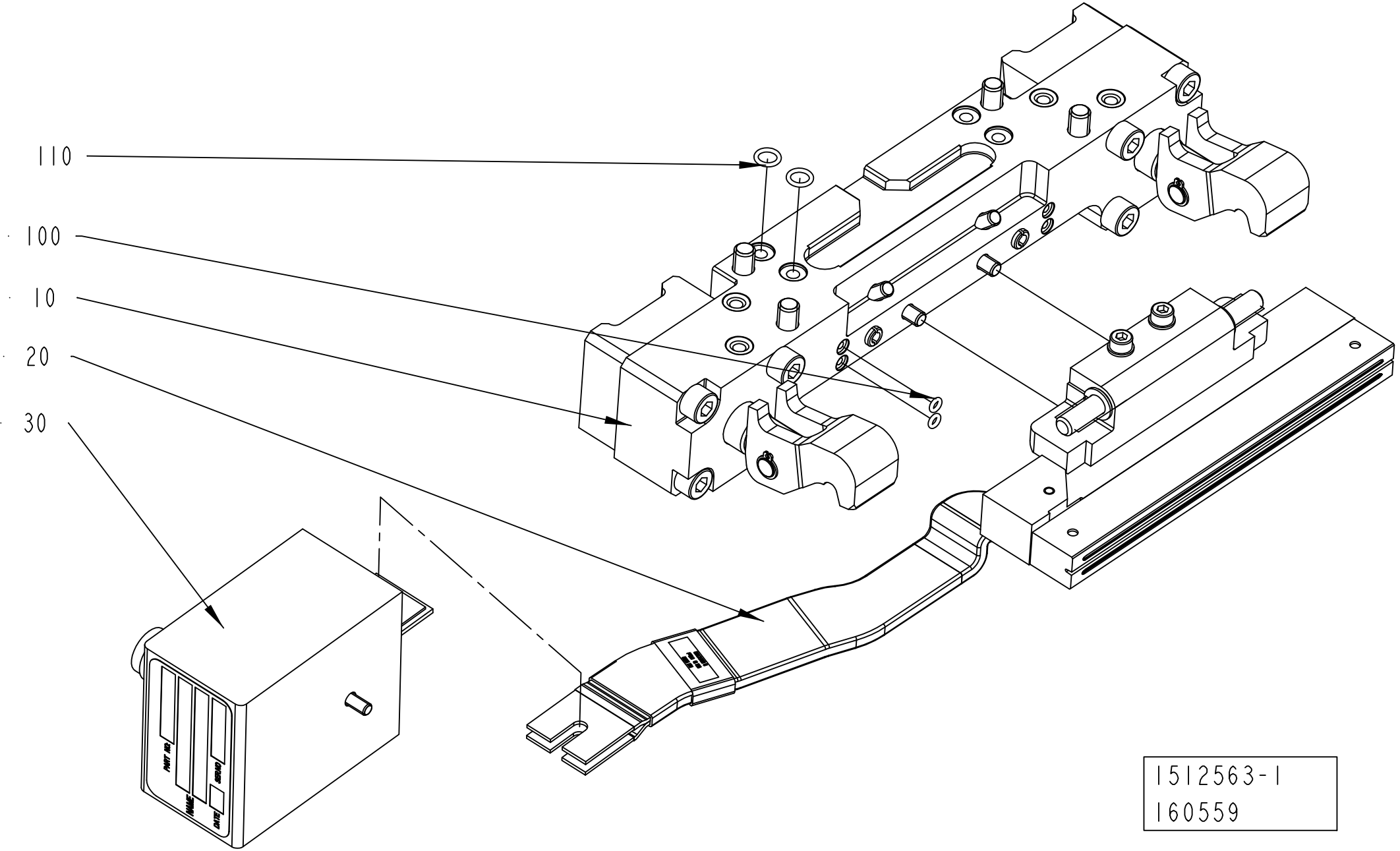

1512563-1
160559

Pos	Part No	UN	Qty	Description	Page No
TBA 1890S QC, TBA 2000S QC, TBA 1400B (See drawing on pages: 4-122, 4-124)					
120	311103-0267		1	PARALLEL PIN ISO 2338 4M6X10 A1	
Common Parts					
010	2552005-0100		1	PRESSURE JAW	**4-127**
020	2552006-0100		1	INDUCTOR LEFT	**4-129, 4-131, 4-133, 4-135, 4-137, 4-139**
030	2546229-0100		1	ADAPTION TRANSFORMER	**4-141**
100	315202-0101		2	O-RING 3,1X1,6 MM	
110	315202-0105		2	O-RING 7,1X1,6 MM	

Pos	Part No	UN	Qty	Description	Page No

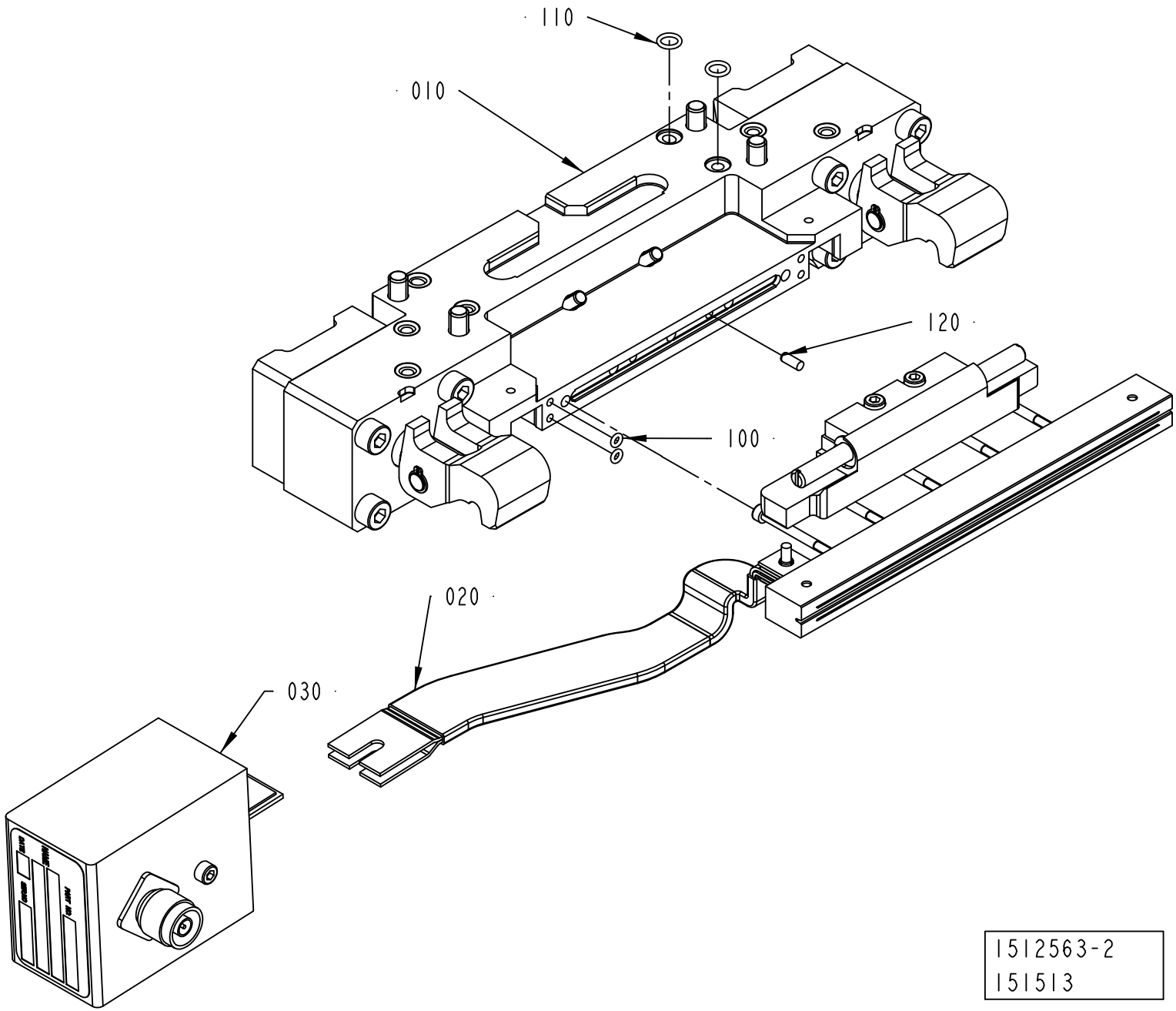
110
010
120
100
020
030
1512563-2
151513

Pos	Part No	UN	Qty	Description	Page No
TBA 1890S QC, TBA 2000S QC, TBA 1400B (See drawing on pages: 4-122, 4-124)					
120	311103-0267		1	PARALLEL PIN ISO 2338 4M6X10 A1	
Common Parts					
010	2552005-0100		1	PRESSURE JAW	**4-127**
020	2552006-0100		1	INDUCTOR LEFT	**4-129, 4-131, 4-133, 4-135, 4-137, 4-139**
030	2546229-0100		1	ADAPTION TRANSFORMER	**4-141**
100	315202-0101		2	O-RING 3,1X1,6 MM	
110	315202-0105		2	O-RING 7,1X1,6 MM	

Pos	Part No	UN	Qty	Description	Page No

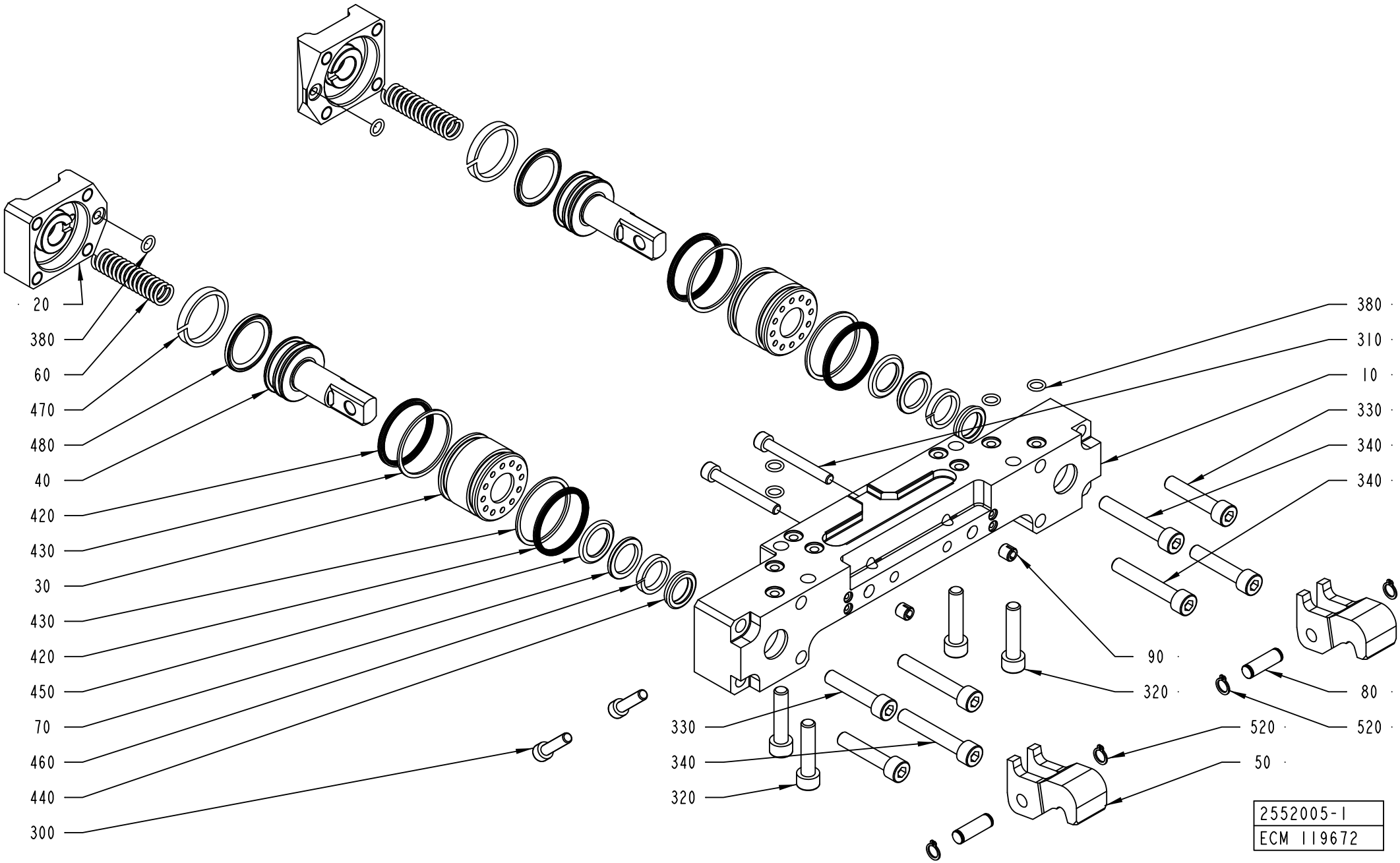
20
380
60
470
480
40
420
430
30
430
420
450
70
460
440
300
380
310
10
330
340
340
90
320
80
520
520
50
330
340
320
2552005-1
ECM 119672

ECM: 315373 - 20080101
Group number: 2552005-0100
Assembly Drawing: 2552005-1_1_AA

Pos	Part No	UN	Qty	Description	Page No
TBA 0200M, TBA 0200B, TBA 0200SQ, TBA 0200S, TBA 0250S, TBA 0250B, TBA 0330S, TPA 0330SQ, TPA 0250SQ, TPA 0200SQ, TBA 0250SQ					
010	2569908-0000		1	HOUSING	
020	2700151-0000		2	LID	
030	1349595-0000		2	SLEEVE	
040	929372-0000		2	PISTON	
050	1538349-0000		2	CATCH	
060	1260328-0000		2	SPRING	
080	950351-0000		2	SHAFT	
090	107426-0000		2	GUIDE SLEEVE	
300	312115-0372		2	SCREW ISO4762 M6X25 A4 80	
310	312115-0380		2	SCREW ISO4762 M6X50 A4 80	
330	312115-0459		4	SCREW ISO4762 M8X40 A4 80	
420	90091-0359		4	X-SEAL 36,17X2,62 MM	
430	90091-0360		4	BACK-UP RING 37,5X1,4 MM	
470	90091-0391		2	SEAL SLYDRING	
480	90091-0398		2	PISTON SEAL GLIDE RING T 20,5X28X3,2 MM	
TBA 0500S, TBA 0500SQ, TBA 0500B, TBA 1000B, TBA 1000SQ, TBA 1000S, TBA 1500S, TPA 1000SQ, TPA 0500SQ, TPA 0750SQ					
010	2569908-0000		1	HOUSING	
020	2700151-0000		2	LID	
030	1348504-0000		2	SLEEVE	
040	1349612-0000		2	PISTON	
050	1538349-0000		2	CATCH	
060	1260328-0000		2	SPRING	
080	950351-0000		2	SHAFT	
090	107426-0000		2	GUIDE SLEEVE	
300	312115-0372		2	SCREW ISO4762 M6X25 A4 80	
310	312115-0380		2	SCREW ISO4762 M6X50 A4 80	
330	312115-0459		4	SCREW ISO4762 M8X40 A4 80	
420	90091-0359		4	X-SEAL 36,17X2,62 MM	
430	90091-0360		4	BACK-UP RING 37,5X1,4 MM	
470	90091-0368		2	WEAR RING 30X45X5,3 MM	
480	90091-0428		2	PISTON SEAL GLIDE RING T 27,5X34,5X3,2 M	
TBA 1890S, TBA 2000S, TBA 1400B					
010	2566336-0000		1	BEARING HOUSING	
020	2588294-0000		2	LID	
030	2588295-0000		2	SLEEVE	
040	2588296-0000		2	PISTON	
050	2566338-0000		2	CATCH	
060	2594892-0000		2	SPRING	
080	2588297-0000		2	SHAFT	
300	312115-0372		2	SCREW ISO4762 M6X25 A4 80	
420	90459-2146		4	X-SEAL 42,52X2,62 MM	
430	90459-2145		4	BACK-UP RING 43,5X1,4 MM	
470	90091-0074		2	WEAR RING 35X40X5,3 MM	
480	90459-2173		2	SEAL GLYDRING 32,5X40X3,2 MM	
TGA 1000SQ, TGA 0750SQ, TGA 0500SQ					
010	2612745-0000		1	BEARING HOUSING	
020	2700151-0000		2	LID	
030	1348504-0000		2	SLEEVE	
040	1349612-0000		2	PISTON	
050	1538349-0000		2	CATCH	
060	1260328-0000		2	SPRING	
080	950351-0000		2	SHAFT	
090	107426-0000		2	GUIDE SLEEVE	
310	312115-0380		2	SCREW ISO4762 M6X50 A4 80	
330	312115-0459		4	SCREW ISO4762 M8X40 A4 80	
420	90091-0359		4	X-SEAL 36,17X2,62 MM	
430	90091-0360		4	BACK-UP RING 37,5X1,4 MM	
470	90091-0368		2	WEAR RING 30X45X5,3 MM	
480	90091-0428		2	PISTON SEAL GLIDE RING T 27,5X34,5X3,2 M	
Common Parts					
070	1038240-0000		2	SPACER	
320	312115-0457		4	SCREW ISO4762 M8X35 A4 80	
340	312115-0461		4	SCREW ISO4762 M8X50 A4 80	
380	315202-0105		6	O-RING 7,1X1,6 MM	
440	90091-0362		2	SCRAPER, EXCLUDER2 18X22,8X3,7 MM	
450	90091-0364		2	ROD SEAL, STEPSEAL 18X25,3X3,2 MM	
460	90091-0366		2	WEAR RING 18X23X3.9	
520	90141-0015		4	RETAINING RING FOR SHAFT DIN 471 8 SS	

Machine Type	Group Description	Used-In	Group Number	Page No

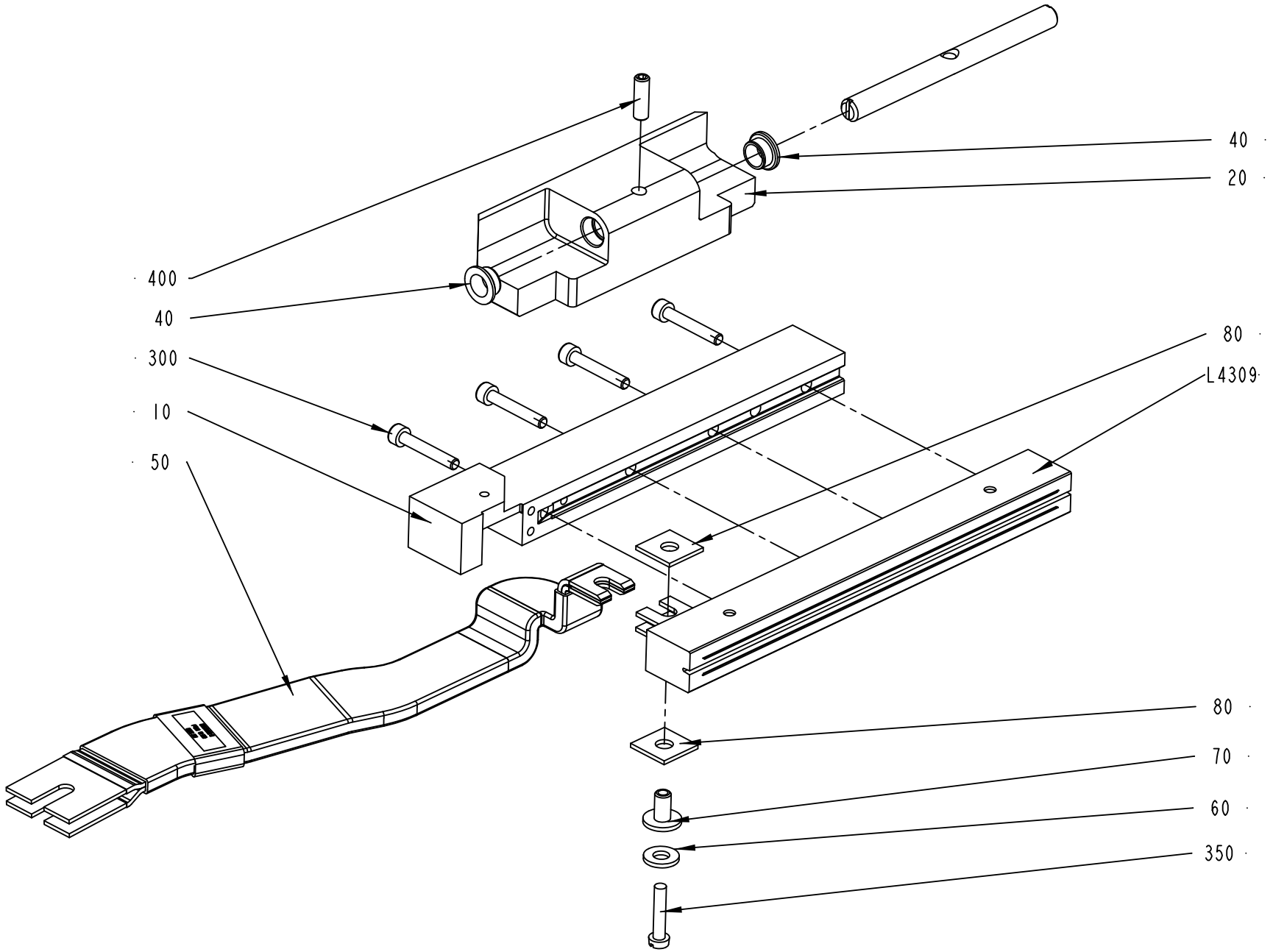

2552006-1
160559

ECM: 378264 - 20081127
Group number: 2552006-0100
Assembly Drawing: 2552006-1_1_AB

This list covers pages from 4-128 to 4-139

Pos	Part No	UN	Qty	Description	Page No
TBA 1890S QC, TBA 2000S QC (See drawing on page: 4-134)					
020	2588293-0000		1	HOLDER	
030	2686144-0000		1	SHAFT	
040	2531703-0000		2	BUSHING	
050	2698011-0000		1	BUSBAR	
300	312115-0305		5	SCREW ISO4762 M4X50 A4 80	
400	312115-0327		2	SCREW ISO4762 M5X12 A4 80	
L4309	1533046-0000		1	INDUCTOR	
TGA 1000SQ, TGA 0750SQ, TGA 0500SQ (See drawing on page: 4-138)					
010	2649675-0000		1	RAIL	
050	1498849-0000		1	BUSBAR	
090	2698631-0000		1	VOLUME BULGE	
300	312115-0297		4	SCREW ISO4762 M4X25 A4 80	
370	312105-0370		1	SCREW M6S ISO 4017 M6X20 A480	
420	315105-0153		1	WASHER BRB 6,4X12 RFR	
L4309	1566783-0000		1	INDUCTOR	
TPA 0200SQ QC, TPA 0250SQ QC (See drawing on page: 4-132)					
010	1348545-0000		1	RAIL	
020	2674335-0000		1	HOLDER	
050	1498849-0000		1	BUSBAR	
300	312115-0297		3	SCREW ISO4762 M4X25 A4 80	
L4309	1110930-0000		1	INDUCTOR	
TPA 0330SQ (See drawing on page: 4-134)					
010	1348545-0000		1	RAIL	
020	2611655-0000		1	CLAMP HOLDER	
030	2513013-0000		1	SHAFT	
040	2531703-0000		2	BUSHING	
050	1498849-0000		1	BUSBAR	
300	312115-0297		3	SCREW ISO4762 M4X25 A4 80	
400	312115-0327		2	SCREW ISO4762 M5X12 A4 80	
L4309	1520167-0000		1	INDUCTOR	
TPA 0750SQ SMILE QC, TPA 1000SQ SMILE QC (See drawing on page: 4-136)					
010	1558819-0000		1	RAIL	
020	2660404-0000		1	HOLDER	
050	1498849-0000		1	BUSBAR	
090	2503700-0000		1	VOLUME BULGE	
100	2500591-0000		1	VOLUME BULGE	
300	312115-0297		4	SCREW ISO4762 M4X25 A4 80	
360	311103-0234		1	PARALLEL PIN ISO 2338 3M6X12 A1	
370	312155-0287		2	SCREW DIN 7991 MF6S M4X8 A4 70	
380	312155-0325		2	SCREW DIN 7991 MF6S M5X10 A4 70	
L4309	2663378-0000		1	INDUCTOR	
TPA 1000SQ FT NOQC (See drawing on page: 4-134)					
010	1558819-0000		1	RAIL	
020	2579989-0000		1	HOLDER	
030	2579990-0000		1	SHAFT	
040	2531703-0000		2	BUSHING	
050	1498849-0000		1	BUSBAR	
090	2503700-0000		1	VOLUME BULGE	
300	312115-0297		4	SCREW ISO4762 M4X25 A4 80	
370	312155-0287		2	SCREW DIN 7991 MF6S M4X8 A4 70	
400	312115-0327		2	SCREW ISO4762 M5X12 A4 80	
L4309	2663378-0000		1	INDUCTOR	
TPA 1000SQ SMILE NOQC (See drawing on page: 4-134)					
010	1558819-0000		1	RAIL	
020	2579991-0000		1	HOLDER	
030	2579990-0000		1	SHAFT	
040	2531703-0000		2	BUSHING	
050	1498849-0000		1	BUSBAR	
090	2503700-0000		1	VOLUME BULGE	
100	2500591-0000		1	VOLUME BULGE	
300	312115-0297		4	SCREW ISO4762 M4X25 A4 80	
370	312155-0287		2	SCREW DIN 7991 MF6S M4X8 A4 70	
380	312155-0325		2	SCREW DIN 7991 MF6S M5X10 A4 70	
400	312115-0327		2	SCREW ISO4762 M5X12 A4 80	
L4309	2663378-0000		1	INDUCTOR	
TPA 500SQ LIGHTCAP (See drawing on page: 4-136)					
010	2969719-0000		1	RAIL	
020	2570848-0000		1	HOLDER	
030	2513013-0000		1	SHAFT	
040	2570849-0000		2	BUSHING	
050	1498849-0000		1	BUSBAR	
090	2503688-0000		1	VOLUME BULGE	
100	2969721-0000		1	VOLUME BULGE	
300	312115-0297		4	SCREW ISO4762 M4X25 A4 80	
360	311103-0234		1	PARALLEL PIN ISO 2338 3M6X12 A1	
370	312155-0287		2	SCREW DIN 7991 MF6S M4X8 A4 70	
380	312155-0325		2	SCREW DIN 7991 MF6S M5X10 A4 70	
400	312115-0329		2	SCREW ISO4762 M5X16 A4 80	
L4309	2978582-0000		1	INDUCTOR	
TPA 500SQ NOMOLDEDCAP (See drawing on page: 4-136)					
010	1558819-0000		1	RAIL	
020	2570848-0000		1	HOLDER	
030	2513013-0000		1	SHAFT	

Machine Type | Group Description | Used-In | Group Number | Page No

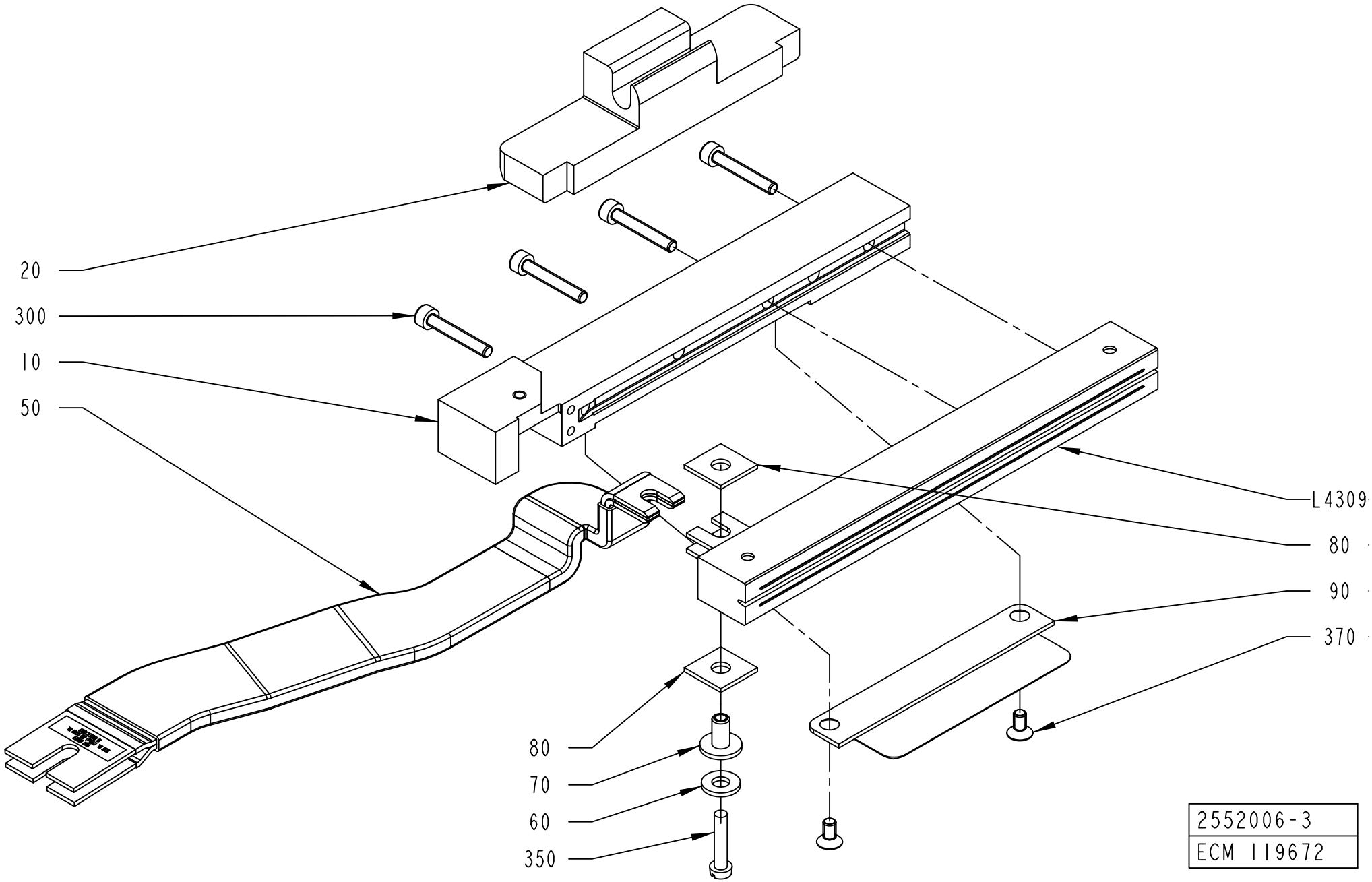
20
300
10
50
L4309
80
90
370
80
70
60
350
2552006-3
ECM 119672

Pos	Part No	UN	Qty	Description	Page No
TPA 500SQ NOMOLDEDCAP (Cont'd) (See drawing on page: 4-136)					
040	2570849-0000		2	BUSHING	
090	2503688-0000		1	VOLUME BULGE	
100	1549834-0000		1	VOLUME BULGE	
300	312115-0297		4	SCREW ISO4762 M4X25 A4 80	
360	311103-0234		1	PARALLEL PIN ISO 2338 3M6X12 A1	
370	312155-0287		2	SCREW DIN 7991 MF6S M4X8 A4 70	
380	312155-0325		2	SCREW DIN 7991 MF6S M5X10 A4 70	
400	312115-0329		2	SCREW ISO4762 M5X16 A4 80	
L4309	2587466-0000		1	INDUCTOR	
TBA 0200B NOQC, TBA 0250B NOQC (See drawing on page: 4-128)					
010	1348545-0000		1	RAIL	
020	1349599-0000		1	HOLDER	
030	1349980-0000		1	SHAFT	
040	1349584-0000		2	BUSHING	
050	1498849-0000		1	BUSBAR	
300	312115-0297		3	SCREW ISO4762 M4X25 A4 80	
400	312318-0329		1	SCREW ISO4029 M5X16 A4	
L4309	1110932-0000		1	INDUCTOR	
TBA 0200B QC, TBA 0330S QC, TBA 0250B QC (See drawing on page: 4-130)					
010	1348545-0000		1	RAIL	
020	2604565-0000		1	HOLDER	
050	1498849-0000		1	BUSBAR	
300	312115-0297		3	SCREW ISO4762 M4X25 A4 80	
L4309	1110932-0000		1	INDUCTOR	
TBA 0200M QC, TBA 0250S QC (See drawing on page: 4-132)					
010	1348545-0000		1	RAIL	
020	2644397-0000		1	HOLDER	
050	1498849-0000		1	BUSBAR	
300	312115-0297		3	SCREW ISO4762 M4X25 A4 80	
L4309	1110931-0000		1	INDUCTOR	
TBA 0200S (See drawing on page: 4-134)					
010	1348545-0000		1	RAIL	
020	2513015-0000		1	HOLDER	
030	2513013-0000		1	SHAFT	
040	2531703-0000		2	BUSHING	
050	1498849-0000		1	BUSBAR	
300	312115-0297		3	SCREW ISO4762 M4X25 A4 80	
400	312115-0329		2	SCREW ISO4762 M5X16 A4 80	
L4309	1110930-0000		1	INDUCTOR	
TBA 0200SQ, TBA 0250SQ (See drawing on page: 4-130)					
010	1558819-0000		1	RAIL	
020	2668318-0000		1	HOLDER	
050	1498849-0000		1	BUSBAR	
090	2679953-0000		1	VOLUME BULGE	
300	312115-0297		3	SCREW ISO4762 M4X25 A4 80	
370	312155-0287		2	SCREW DIN 7991 MF6S M4X8 A4 70	
L4309	2767760-0000		1	INDUCTOR	
TBA 0500B QC, TBA 1000B QC (See drawing on page: 4-130)					
010	1558819-0000		1	RAIL	
020	1487955-0000		1	HOLDER	
050	1498849-0000		1	BUSBAR	
090	1558734-0000		1	VOLUME BULGE	
300	312115-0297		4	SCREW ISO4762 M4X25 A4 80	
370	312155-0287		2	SCREW DIN 7991 MF6S M4X8 A4 70	
L4309	1110938-0000		1	INDUCTOR	
TBA 0500S (See drawing on page: 4-134)					
010	1348545-0000		1	RAIL	
020	2611001-0000		1	CLAMP HOLDER	
030	2579990-0000		1	SHAFT	
040	2531703-0000		2	BUSHING	
050	1498849-0000		1	BUSBAR	
300	312115-0297		4	SCREW ISO4762 M4X25 A4 80	
400	312115-0327		2	SCREW ISO4762 M5X12 A4 80	
L4309	1110934-0000		1	INDUCTOR	
TBA 0500SQ QC, TBA 1000SQ QC (See drawing on page: 4-130)					
010	1348545-0000		1	RAIL	
020	2812891-0000		1	HOLDER	
050	1498849-0000		1	BUSBAR	
300	312115-0297		4	SCREW ISO4762 M4X25 A4 80	
L4309	1110936-0000		1	INDUCTOR	
TBA 1000B NOQC NOMOLDEDCAP (See drawing on page: 4-134)					
010	1348545-0000		1	RAIL	
020	2664280-0000		1	HOLDER	
030	2526812-0000		1	SHAFT	
040	2531703-0000		2	BUSHING	
050	1498849-0000		1	BUSBAR	
300	312115-0297		4	SCREW ISO4762 M4X25 A4 80	
410	315105-0146		2	WASHER BRB 5,3X10 RFR	
L4309	1110938-0000		1	INDUCTOR	
TBA 1000B NOQC STDA7 (See drawing on page: 4-134)					
010	2610954-0000		1	RAIL	
020	2664280-0000		1	HOLDER	
030	2526812-0000		1	SHAFT	

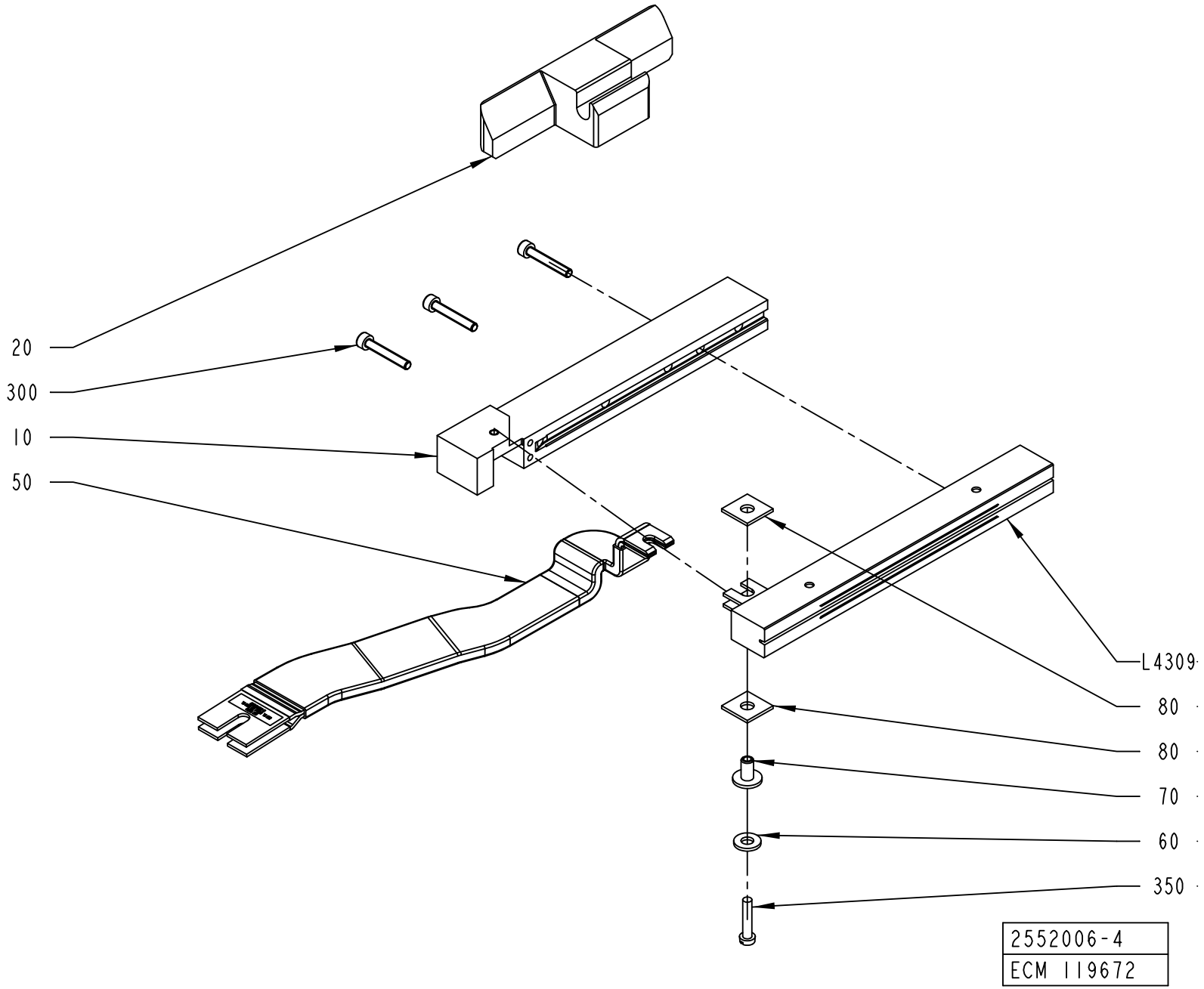
20
300
10
50
L4309
80
80
70
60
350
2552006-4
ECM 119672

Pos	Part No	UN	Qty	Description	Page No
TBA 1000B NOQC STDA7 (Cont'd) (See drawing on page: 4-134)					
040	2531703-0000		2	BUSHING	
050	1498849-0000		1	BUSBAR	
300	312115-0297		4	SCREW ISO4762 M4X25 A4 80	
410	315105-0146		2	WASHER BRB 5,3X10 RFR	
L4309	2610956-0000		1	INDUCTOR	
TBA 1000S LIGHTCAP (See drawing on page: 4-134)					
010	2766751-0000		1	RAIL	
020	2559425-0000		1	CLAMP HOLDER	
030	2526812-0000		1	SHAFT	
040	2531703-0000		2	BUSHING	
050	1498849-0000		1	BUSBAR	
300	312115-0297		4	SCREW ISO4762 M4X25 A4 80	
400	312115-0327		2	SCREW ISO4762 M5X12 A4 80	
L4309	1566843-0000		1	INDUCTOR	
TBA 1000S NOMOLDEDCAP (See drawing on page: 4-134)					
010	1348545-0000		1	RAIL	
020	2559425-0000		1	CLAMP HOLDER	
030	2526812-0000		1	SHAFT	
040	2531703-0000		2	BUSHING	
050	1498849-0000		1	BUSBAR	
300	312115-0297		4	SCREW ISO4762 M4X25 A4 80	
400	312115-0327		2	SCREW ISO4762 M5X12 A4 80	
L4309	1110937-0000		1	INDUCTOR	
TBA 1000S STDA7 (See drawing on page: 4-134)					
010	2546475-0000		1	RAIL	
020	2559425-0000		1	CLAMP HOLDER	
030	2526812-0000		1	SHAFT	
040	2531703-0000		2	BUSHING	
050	1498849-0000		1	BUSBAR	
300	312115-0297		4	SCREW ISO4762 M4X25 A4 80	
400	312115-0327		2	SCREW ISO4762 M5X12 A4 80	
L4309	2546474-0000		1	INDUCTOR	
TBA 1000SQ NOQC (See drawing on page: 4-134)					
010	1348545-0000		1	RAIL	
020	2526811-0000		1	HOLDER	
030	2526812-0000		1	SHAFT	
040	2531703-0000		2	BUSHING	
050	1498849-0000		1	BUSBAR	
300	312115-0297		4	SCREW ISO4762 M4X25 A4 80	
400	312115-0327		2	SCREW ISO4762 M5X12 A4 80	
L4309	1110936-0000		1	INDUCTOR	

Pos	Part No	UN	Qty	Description	Page No
TBA 1400B (See drawing on page: 4-134)					
020	2588293-0000		1	HOLDER	
030	2686144-0000		1	SHAFT	
040	2531703-0000		2	BUSHING	
050	2698011-0000		1	BUSBAR	
300	312115-0305		5	SCREW ISO4762 M4X50 A4 80	
400	312115-0327		2	SCREW ISO4762 M5X12 A4 80	
L4309	2841895-0000		1	INDUCTOR	
	1533046-0000		*1*	*INDUCTOR*	
TBA 1500S (See drawing on page: 4-134)					
010	1348545-0000		1	RAIL	
020	2570302-0000		1	CLAMP HOLDER	
030	2526812-0000		1	SHAFT	
040	2531703-0000		2	BUSHING	
050	1498849-0000		1	BUSBAR	
300	312115-0297		4	SCREW ISO4762 M4X25 A4 80	
400	312115-0327		2	SCREW ISO4762 M5X12 A4 80	
L4309	1110938-0000		1	INDUCTOR	
Common Parts					
060	28509-0000		1	WASHER	
070	32544-0000		1	INSULATION NUT	
080	1036584-0000		2	WASHER	
350	312125-0295		1	SCREW ISO 1207 M4X20 A4	

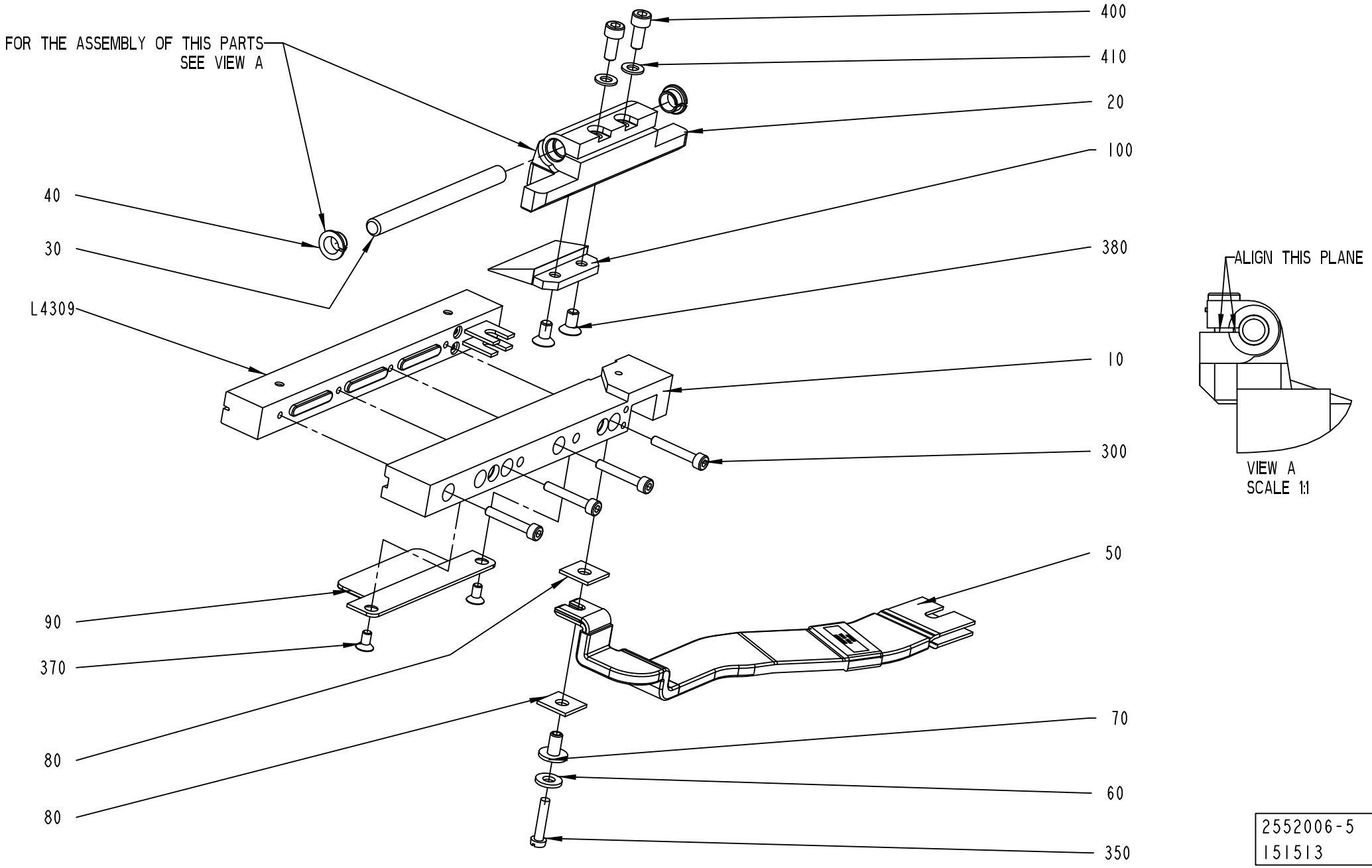
FOR THE ASSEMBLY OF THIS PARTS SEE VIEW A
400
410
20
100
380
10
300
50
70
60
350
40
30
L4309
90
370
80
80
ALIGN THIS PLANE
VIEW A
SCALE 1:1
2552006-5
151513

ECM: 378264 - 20081127
Group number: 2552006-0100
Assembly Drawing: 2552006-5_1_AC

This list covers pages from 4-128 to 4-139

Pos	Part No	UN	Qty	Description	Page No
SEE PREVIOUS LISTS PAGES: 4-129, 4-131, 4-133.					

Pos	Part No	UN	Qty	Description	Page No

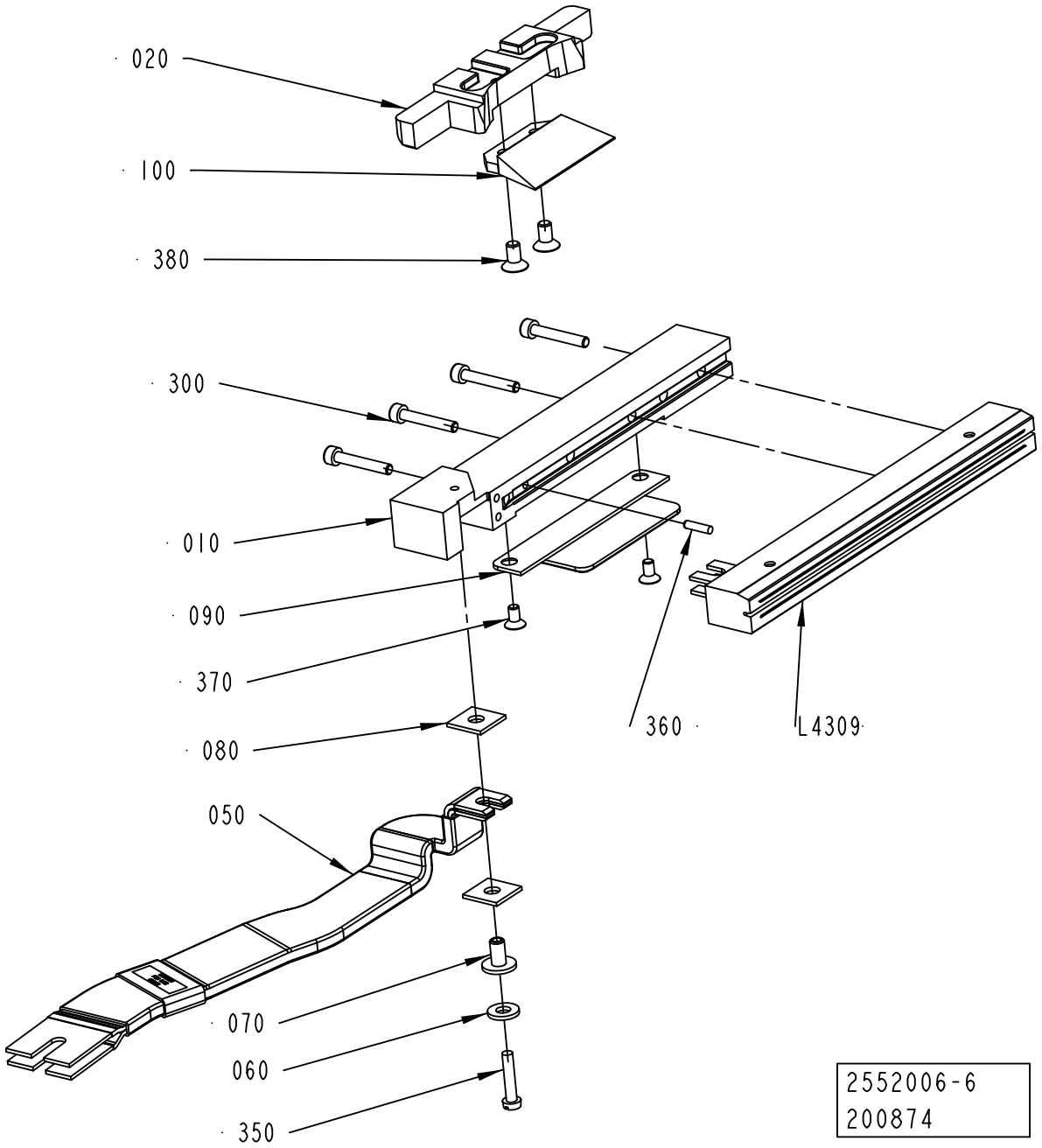
020
100
380
300
010
090
370
080
050
070
060
350
360
L4309
2552006-6
200874

ECM: 378264 - 20081127
Group number: 2552006-0100
Assembly Drawing: 2552006-6_1_AA

This list covers pages from 4-128 to 4-139

Pos	Part No	UN	Qty	Description	Page No
SEE PREVIOUS LISTS PAGES: 4-129, 4-131, 4-133.					

Pos	Part No	UN	Qty	Description	Page No

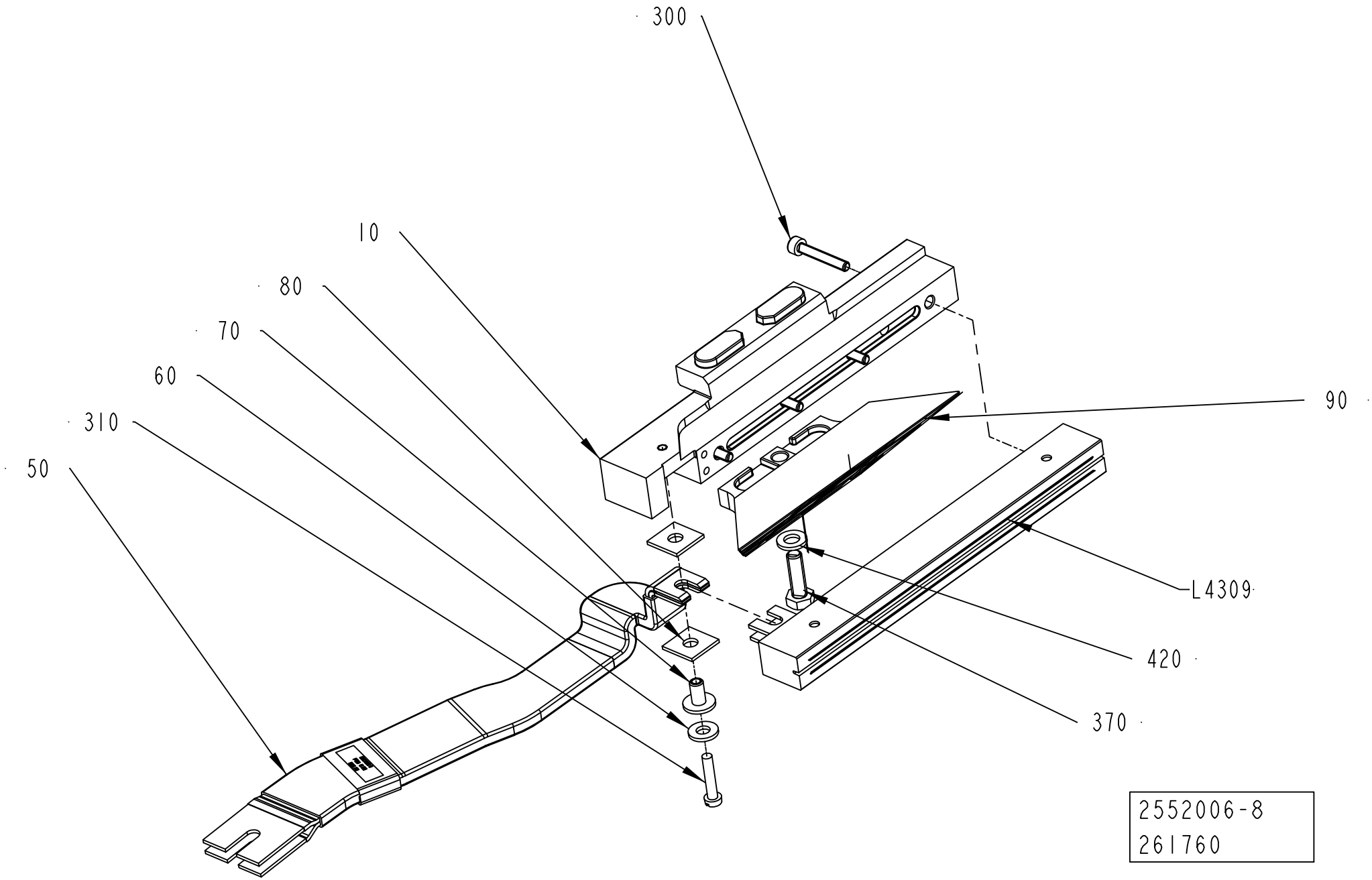
300
10
80
70
60
310
50
90
L4309
420
370
2552006-8
261760

ECM: 378264 - 20081127
Group number: 2552006-0100
Assembly Drawing: 2552006-8_1_AA

This list covers pages from 4-128 to 4-139

Pos	Part No	UN	Qty	Description	Page No
SEE PREVIOUS LISTS PAGES: 4-129, 4-131, 4-133.					

Pos	Part No	UN	Qty	Description	Page No

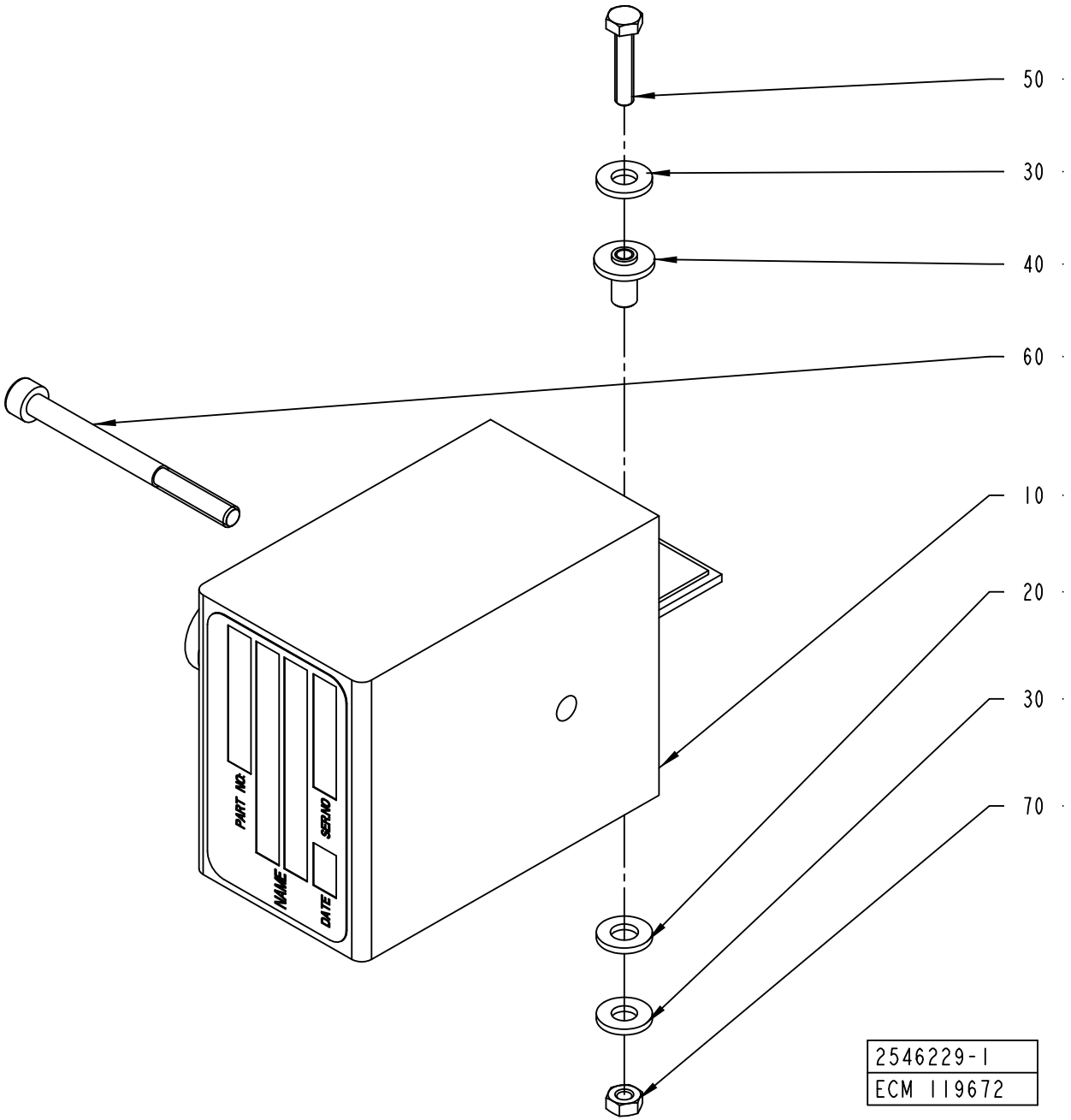
50
30
40
60
10
20
30
70
PART NO.
SER NO
NAME
DATE
2546229-1
ECM 119672

ECM: 360774 - 20081001
Group number: 2546229-0100
Assembly Drawing: 2546229-1_1_AA

Pos	Part No	UN	Qty	Description	Page No
TBA 0200B, TBA 0250B, TBA 0330S					
010	67379-0269		1	TRANSFORMER	
TBA 0200M, TBA 0250S, TPA 0200SQ, TPA 0500SQ, TPA 0250SQ QC					
010	67379-0206		1	TRANSFORMER	
TBA 0200S					
010	67379-0105		1	TRANSFORMER	
TBA 0200SQ, TPA 0250SQ NOQC, TBA 0250SQ					
010	67379-0114		1	TRANSFORMER	
TBA 0500S					
010	67379-0106		1	TRANSFORMER	
TBA 0500SQ, TBA 0500B, TBA 1000B, TBA 1000SQ, TBA 1000S, TBA 1500S					
010	67379-0101		1	TRANSFORMER	
TPA 0330SQ					
010	67379-0269		1	TRANSFORMER	
TPA 1000SQ, TBA 1890S, TBA 2000S, TPA 0750SQ, TBA 1400B, TGA 1000SQ, TGA 0750SQ, TGA 0500SQ					
010	67379-0249		1	TRANSFORMER	
Common Parts					
020	32079-0000		1	WASHER	
030	28509-0000		2	WASHER	
040	32544-0000		2	INSULATION NUT	
050	312105-0295		1	SCREW M6S ISO 4017 M4X20 A470	
060	90458-0058		1	SCREW M5X60 A280	
070	312605-0312		2	HEXAGON NUT, M6M M4 A280	

Pos	Part No	UN	Qty	Description	Page No

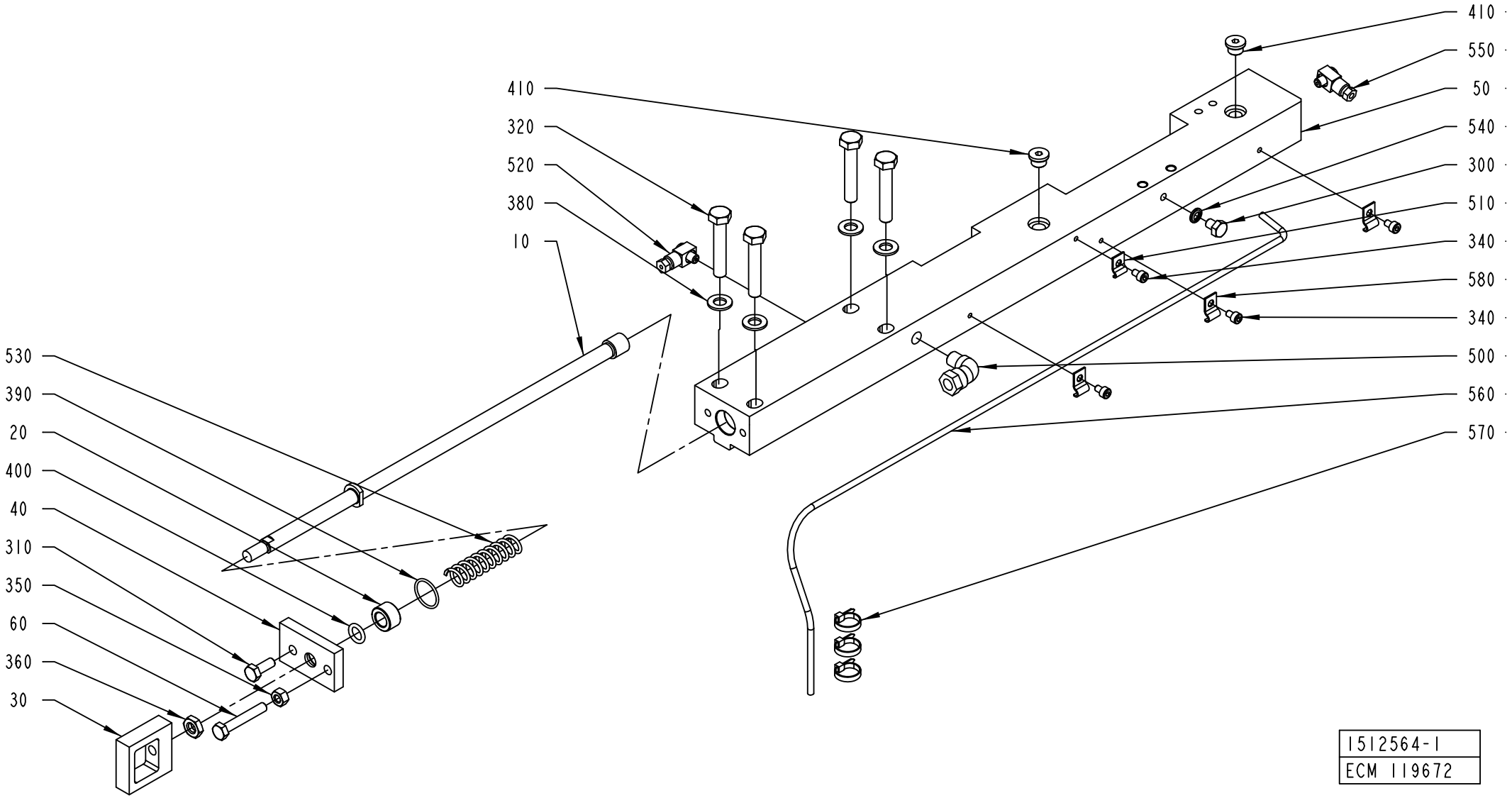
410
320
520
380
10
530
390
20
400
40
310
350
60
360
30
410
550
50
540
300
510
340
580
340
500
560
570
1512564-1
ECM 119672

ECM: 387838 - 20090403
Group number: 1512564-0200
Assembly Drawing: 1512564-1_1_AA

This list covers pages from 4-142 to 4-151

Pos	Part No	UN	Qty	Description	Page No
TBA 0200B QC, TBA 0330S QC, TBA 0250B QC, TPA 0200SQ QC, TPA 0250SQ QC (See drawing on page: 4-144)					
010	2530508-0000		1	TIE ROD	
050	2571843-0000		1	CARRIER	
070	1549312-0000		1	INSERT	
300	312105-0362		1	SCREW M6S ISO 4017 M6X8 A480	
340	312115-0285		4	SCREW ISO4762 M4X6 A4 80	
345	312145-0323		3	SCREW ISO 2009 MFS M5X8 A4	
400	315202-0208		1	O-RING 9,3X2,4 MM	
510	90165-0058		1	PIPE CLIP FOR TUBE D=2,5 MM	
520	90134-0058		1	CONNECTION	
540	315211-0103		1	BONDED SEAL SS/NBR90 M6	
550	90134-0068		1	CONNECTION	
560	90166-0109	MM	800	TUBE 4 MM PA TRANSP.	
580	90165-0056		3	PIPE CLIP FOR TUBE D=4 MM	
TBA 0200M, TBA 0250S (See drawing on page: 4-144)					
010	2530508-0000		1	TIE ROD	
050	2571843-0000		1	CARRIER	
070	2641225-0000		1	INSERT	
300	312105-0362		1	SCREW M6S ISO 4017 M6X8 A480	
340	312115-0285		4	SCREW ISO4762 M4X6 A4 80	
345	312145-0323		3	SCREW ISO 2009 MFS M5X8 A4	
400	315202-0208		1	O-RING 9,3X2,4 MM	
510	90165-0058		1	PIPE CLIP FOR TUBE D=2,5 MM	
520	90134-0058		1	CONNECTION	
540	315211-0103		1	BONDED SEAL SS/NBR90 M6	
550	90134-0068		1	CONNECTION	
560	90166-0109	MM	800	TUBE 4 MM PA TRANSP.	
580	90165-0056		3	PIPE CLIP FOR TUBE D=4 MM	
TBA 0200S, TBA 0500S, TPA 0330SQ, TPA 0500SQ, TBA 0200B NOQC, TBA 0250B NOQC (See drawing on page: 4-142)					
010	2530508-0000		1	TIE ROD	
050	2531114-0000		1	CARRIER	
300	312105-0362		1	SCREW M6S ISO 4017 M6X8 A480	
340	312115-0285		4	SCREW ISO4762 M4X6 A4 80	
400	315202-0208		1	O-RING 9,3X2,4 MM	
510	90165-0058		1	PIPE CLIP FOR TUBE D=2,5 MM	
520	90134-0058		1	CONNECTION	
540	315211-0103		1	BONDED SEAL SS/NBR90 M6	
550	90134-0068		1	CONNECTION	
560	90166-0109	MM	800	TUBE 4 MM PA TRANSP.	
580	90165-0056		3	PIPE CLIP FOR TUBE D=4 MM	

Pos	Part No	UN	Qty	Description	Page No
TBA 0200SQ QC, TBA 0250SQ QC (See drawing on page: 4-144)					
010	2737034-0000		1	TIE ROD	
050	2571843-0000		1	CARRIER	
070	1549312-0000		1	INSERT	
300	312105-0362		1	SCREW M6S ISO 4017 M6X8 A480	
340	312115-0285		4	SCREW ISO4762 M4X6 A4 80	
345	312145-0323		3	SCREW ISO 2009 MFS M5X8 A4	
400	315202-0208		1	O-RING 9,3X2,4 MM	
510	90165-0058		1	PIPE CLIP FOR TUBE D=2,5 MM	
520	90134-0058		1	CONNECTION	
540	315211-0103		1	BONDED SEAL SS/NBR90 M6	
550	90134-0068		1	CONNECTION	
560	90166-0109	MM	800	TUBE 4 MM PA TRANSP.	
580	90165-0056		3	PIPE CLIP FOR TUBE D=4 MM	
TBA 0500B QC, TBA 1000B QC (See drawing on page: 4-144)					
010	1499320-0000		1	TIE ROD	
050	2571843-0000		1	CARRIER	
070	1549312-0000		1	INSERT	
300	312105-0362		1	SCREW M6S ISO 4017 M6X8 A480	
340	312115-0285		4	SCREW ISO4762 M4X6 A4 80	
345	312145-0323		3	SCREW ISO 2009 MFS M5X8 A4	
400	315202-0208		1	O-RING 9,3X2,4 MM	
510	90165-0058		1	PIPE CLIP FOR TUBE D=2,5 MM	
520	90134-0058		1	CONNECTION	
540	315211-0103		1	BONDED SEAL SS/NBR90 M6	
550	90134-0068		1	CONNECTION	
560	90166-0109	MM	800	TUBE 4 MM PA TRANSP.	
580	90165-0056		3	PIPE CLIP FOR TUBE D=4 MM	
TBA 0500SQ QC, TBA 1000SQ QC (See drawing on page: 4-146)					
010	1499320-0000		1	TIE ROD	
050	2647116-0000		1	CARRIER	
070	2647114-0000		1	INSERT	
290	312105-0291		2	SCREW M6S ISO 4017 M4X12 A470	
300	312105-0362		1	SCREW M6S ISO 4017 M6X8 A480	
340	312115-0285		4	SCREW ISO4762 M4X6 A4 80	
345	312145-0323		3	SCREW ISO 2009 MFS M5X8 A4	
400	315202-0208		1	O-RING 9,3X2,4 MM	
510	90165-0058		1	PIPE CLIP FOR TUBE D=2,5 MM	
520	90134-0058		1	CONNECTION	
540	315211-0103		1	BONDED SEAL SS/NBR90 M6	
550	90134-0068		1	CONNECTION	
560	90166-0109	MM	800	TUBE 4 MM PA TRANSP.	

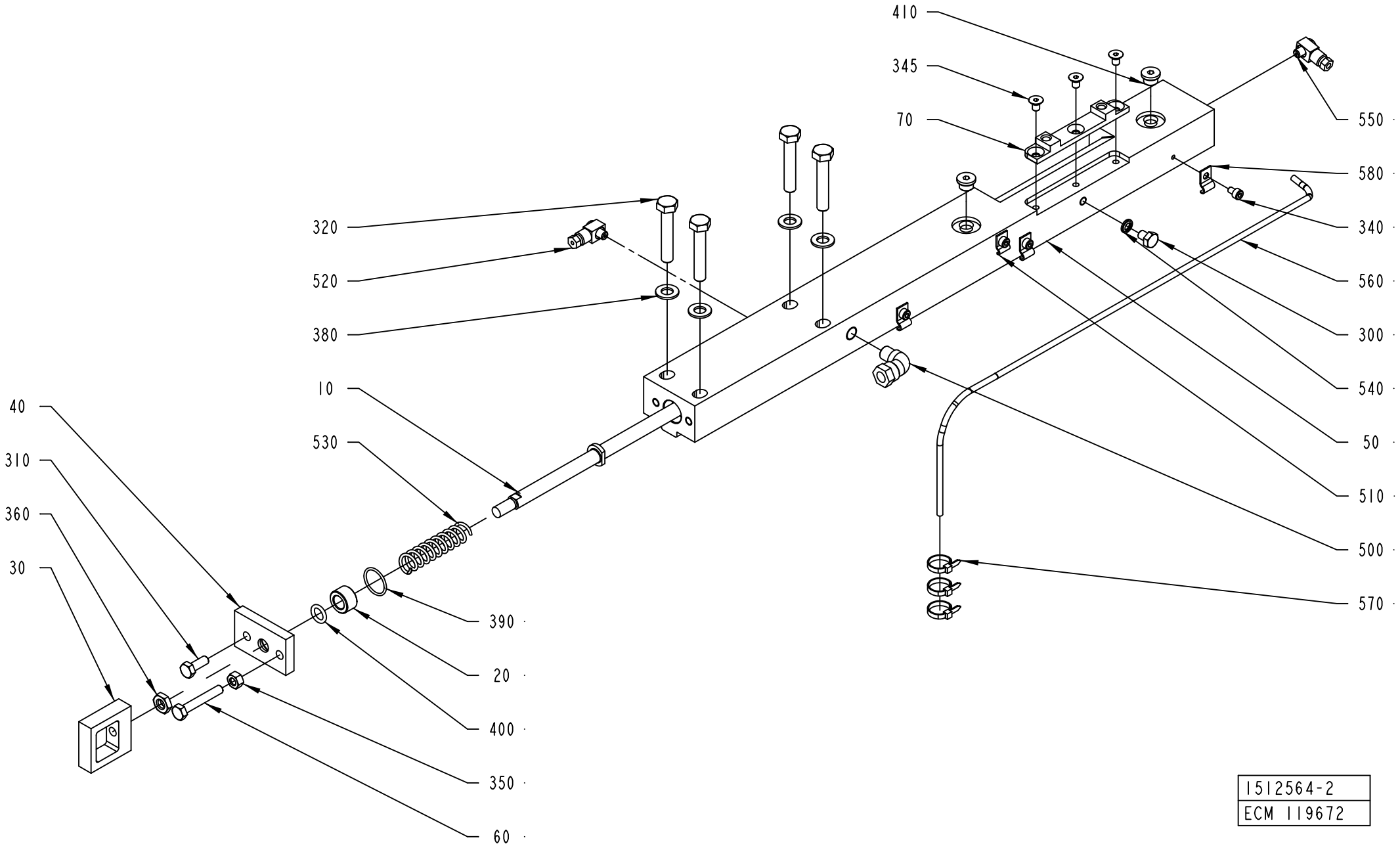

1512564-2
ECM 119672

ECM: 387838 - 20090403
Group number: 1512564-0200
Assembly Drawing: 1512564-2_1_AA

This list covers pages from 4-142 to 4-151

Pos	Part No	UN	Qty	Description	Page No
TBA 0500SQ QC, TBA 1000SQ QC (Cont'd) (See drawing on page: 4-146)					
580	90165-0056		3	PIPE CLIP FOR TUBE D=4 MM	
TBA 1000SQ, TBA 1000S, TBA 1500S, TBA 1000B NOQC, TPA 1000SQ NOQC (See drawing on page: 4-142)					
010	1499320-0000		1	TIE ROD	
050	2531114-0000		1	CARRIER	
300	312105-0362		1	SCREW M6S ISO 4017 M6X8 A480	
340	312115-0285		4	SCREW ISO4762 M4X6 A4 80	
400	315202-0208		1	O-RING 9,3X2,4 MM	
510	90165-0058		1	PIPE CLIP FOR TUBE D=2,5 MM	
520	90134-0058		1	CONNECTION	
540	315211-0103		1	BONDED SEAL SS/NBR90 M6	
550	90134-0068		1	CONNECTION	
560	90166-0109	MM	800	TUBE 4 MM PA TRANSP.	
580	90165-0056		3	PIPE CLIP FOR TUBE D=4 MM	
TBA 1890S QC, TBA 2000S QC, TBA 1400B (See drawing on page: 4-148)					
010	2588291-0000		1	TIE ROD	
050	2566329-0000		1	CARRIER	
070	2566328-0000		1	PLATE	
300	312105-0362		1	SCREW M6S ISO 4017 M6X8 A480	
340	312115-0285		4	SCREW ISO4762 M4X6 A4 80	
400	315202-0208		1	O-RING 9,3X2,4 MM	
510	90165-0058		1	PIPE CLIP FOR TUBE D=2,5 MM	
520	90134-0058		1	CONNECTION	
540	315211-0103		1	BONDED SEAL SS/NBR90 M6	
550	90134-0068		1	CONNECTION	
560	90166-0109	MM	800	TUBE 4 MM PA TRANSP.	
580	90165-0056		3	PIPE CLIP FOR TUBE D=4 MM	
590	312155-0287		3	SCREW DIN 7991 MF6S M4X8 A4 70	
600	2603151-0000		1	SHIM	
TGA 1000SQ, TGA 0750SQ, TGA 0500SQ (See drawing on page: 4-150)					
010	2588291-0000		1	TIE ROD	
040	2612747-0000		1	COVER	
050	2594714-0000		1	CARRIER	
300	312105-0362		3	SCREW M6S ISO 4017 M6X8 A480	
400	90459-3388		1	SCRAPER, 10X16X4,7 MM	
420	311103-0308		1	PARALLEL PIN ISO 2338 5M6X16 A1	
540	315211-0103		3	BONDED SEAL SS/NBR90 M6	
700	90153-0053		1	ADHESIVE, LOCTITE 648 TEMP 150`C 50ML	
TPA 1000SQ QC, TPA 0750SQ QC (See drawing on page: 4-146)					
010	2530508-0000		1	TIE ROD	
050	2647116-0000		1	CARRIER	
070	2647114-0000		1	INSERT	
290	312105-0291		2	SCREW M6S ISO 4017 M4X12 A470	
300	312105-0362		1	SCREW M6S ISO 4017 M6X8 A480	
340	312115-0285		4	SCREW ISO4762 M4X6 A4 80	
345	312145-0323		3	SCREW ISO 2009 MFS M5X8 A4	
400	315202-0208		1	O-RING 9,3X2,4 MM	
510	90165-0058		1	PIPE CLIP FOR TUBE D=2,5 MM	
520	90134-0058		1	CONNECTION	
540	315211-0103		1	BONDED SEAL SS/NBR90 M6	
550	90134-0068		1	CONNECTION	
560	90166-0109	MM	800	TUBE 4 MM PA TRANSP.	
580	90165-0056		3	PIPE CLIP FOR TUBE D=4 MM	
Common Parts					
020	1036495-0000		1	BUSHING	
030	1036585-0000		1	EAR	
040	1036664-0000		1	LID	
060	1523162-0000		1	SCREW	
310	312105-0368		1	SCREW M6S ISO 4017 M6X16 A480	
320	312105-0460		4	SCREW M6S ISO 4014 M8X45 A480	
350	312605-0316		1	HEXAGON NUT, M6M M6 A280	
360	312625-0318		1	HEXAGON THIN NUT, EN 24035 ML6M M8 A4	
380	315105-0165		4	WASHER BRB 8,4X16 RFR	
390	315202-0116		1	O-RING 18,1X1,6 MM	
410	342713-0209		2	PLUG (QUANT.MINIMA= 10PC).	
500	90030-0257		1	CONN. ELBOW, 8-R1/8, EXT.THREAD	
530	1548940-0000		1	SPRING	
570	352113-0101		3	CABLE TIE, BLACK 92X2,5 MM	

Machine Type | Group Description | Used-In | Group Number | Page No

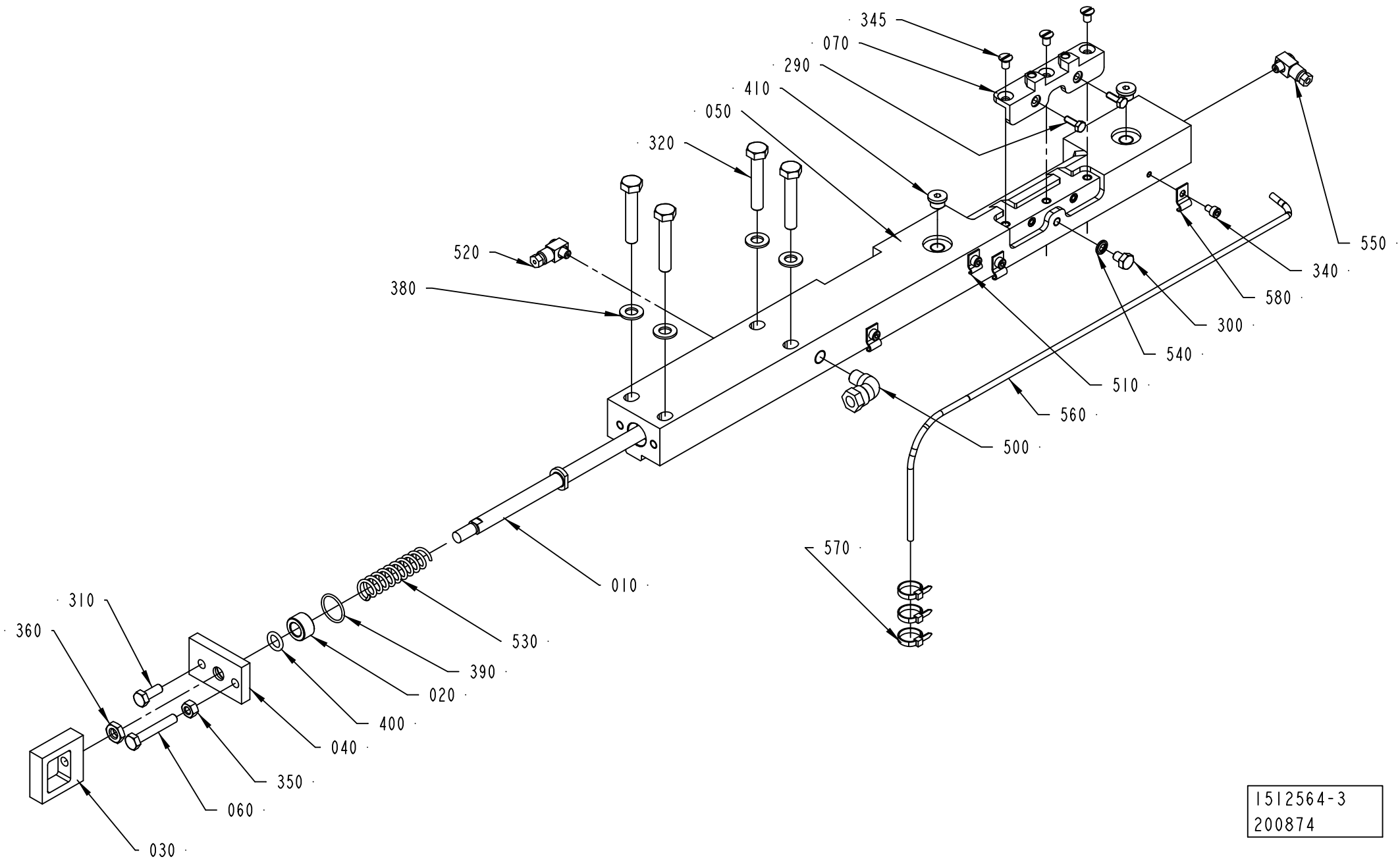

1512564-3
200874

Pos	Part No	UN	Qty	Description	Page No
SEE PREVIOUS LISTS PAGES: 4-143, 4-145.					

Pos	Part No	UN	Qty	Description	Page No

CARRIER CUTTING LEFT

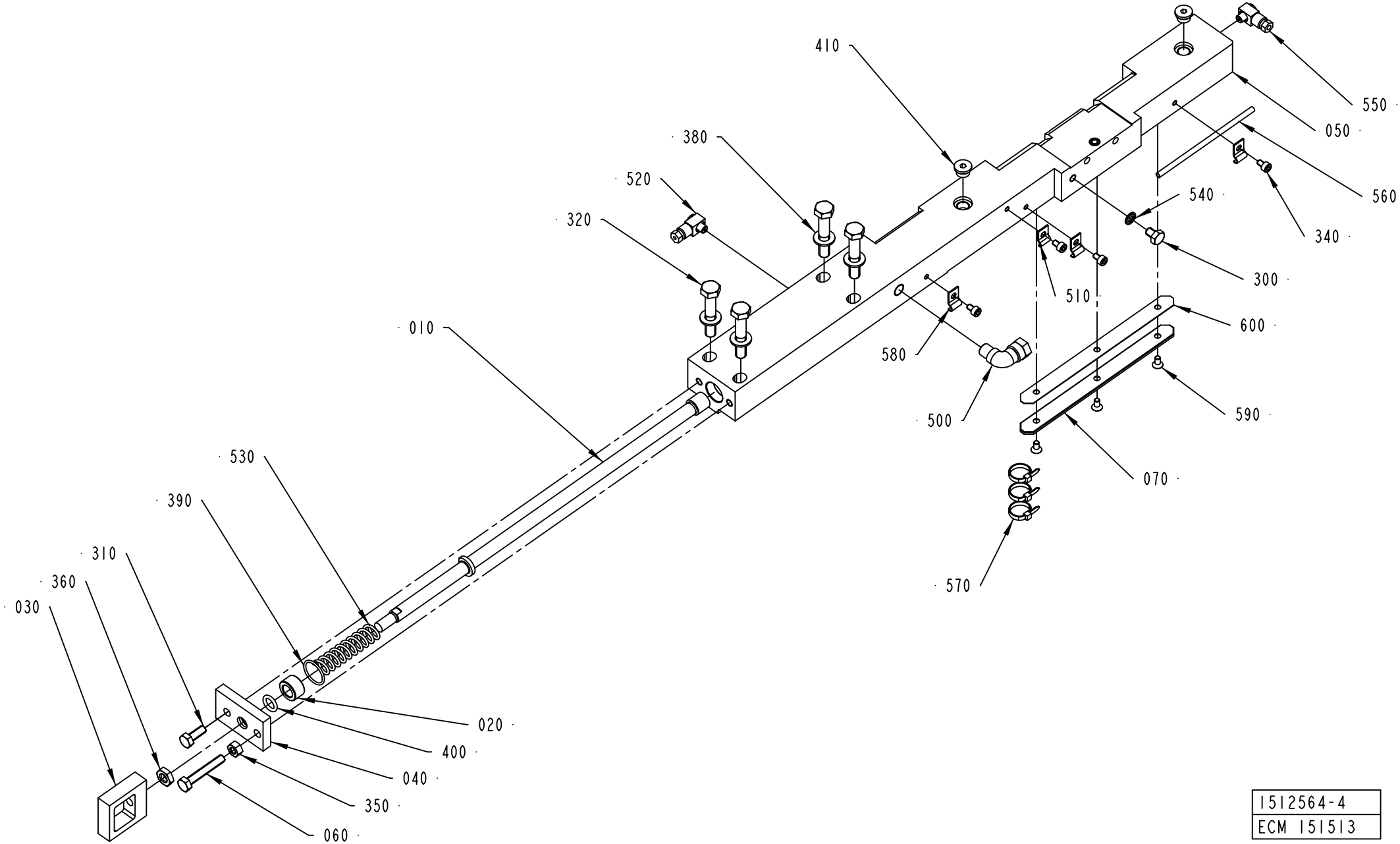

1512564-4
ECM 151513

ECM: 387838 - 20090403
Group number: 1512564-0200
Assembly Drawing: 1512564-4_1_AA

This list covers pages from 4-142 to 4-151

Pos	Part No	UN	Qty	Description	Page No
SEE PREVIOUS LISTS PAGES: 4-143, 4-145.					

Pos	Part No	UN	Qty	Description	Page No

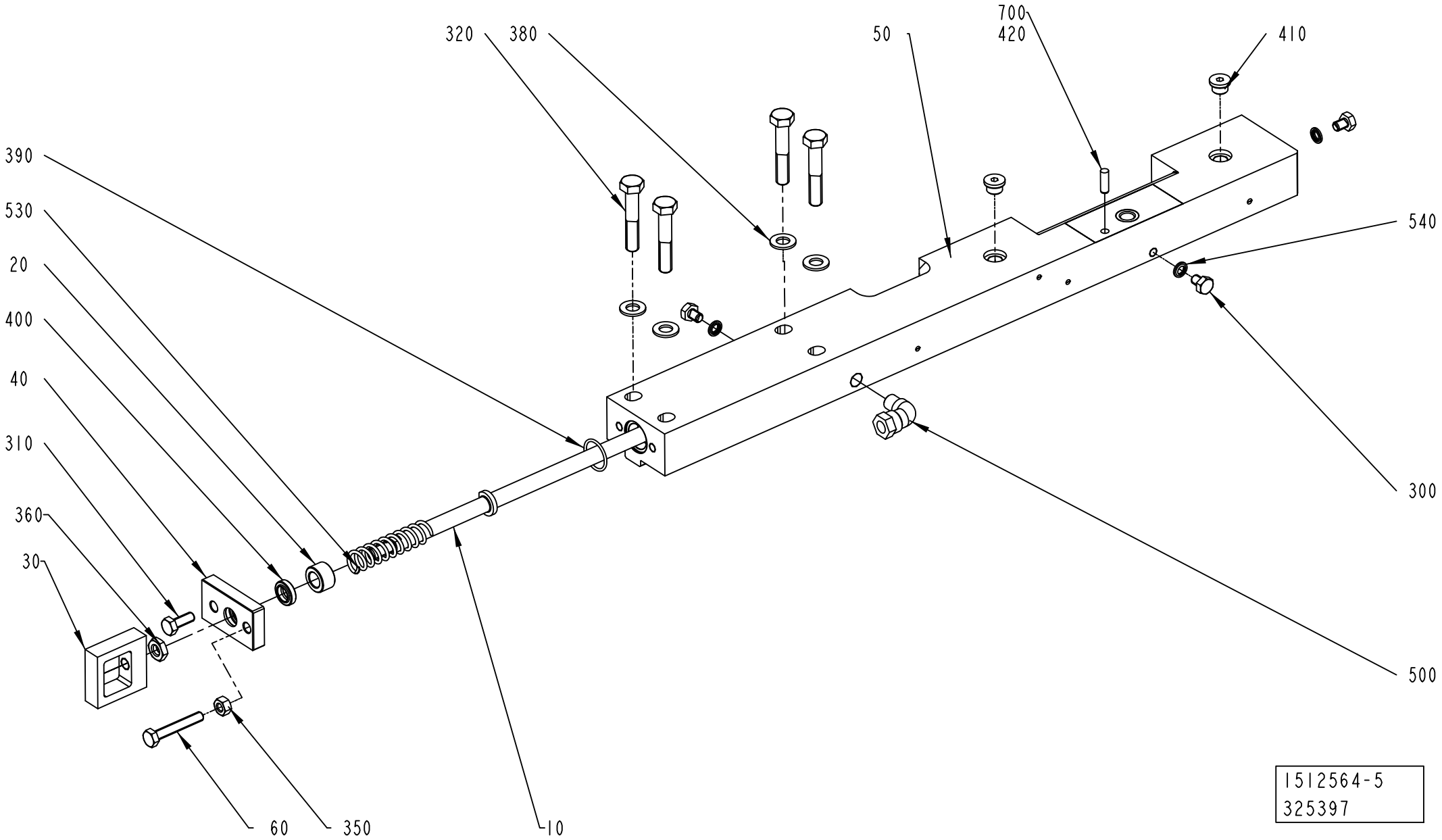
320
380
50
700
420
410
390
530
20
400
40
310
360
30
540
300
500
60
350
10
1512564-5
325397

Pos	Part No	UN	Qty	Description	Page No

SEE PREVIOUS LISTS PAGES: 4-143, 4-145.

Pos	Part No	UN	Qty	Description	Page No

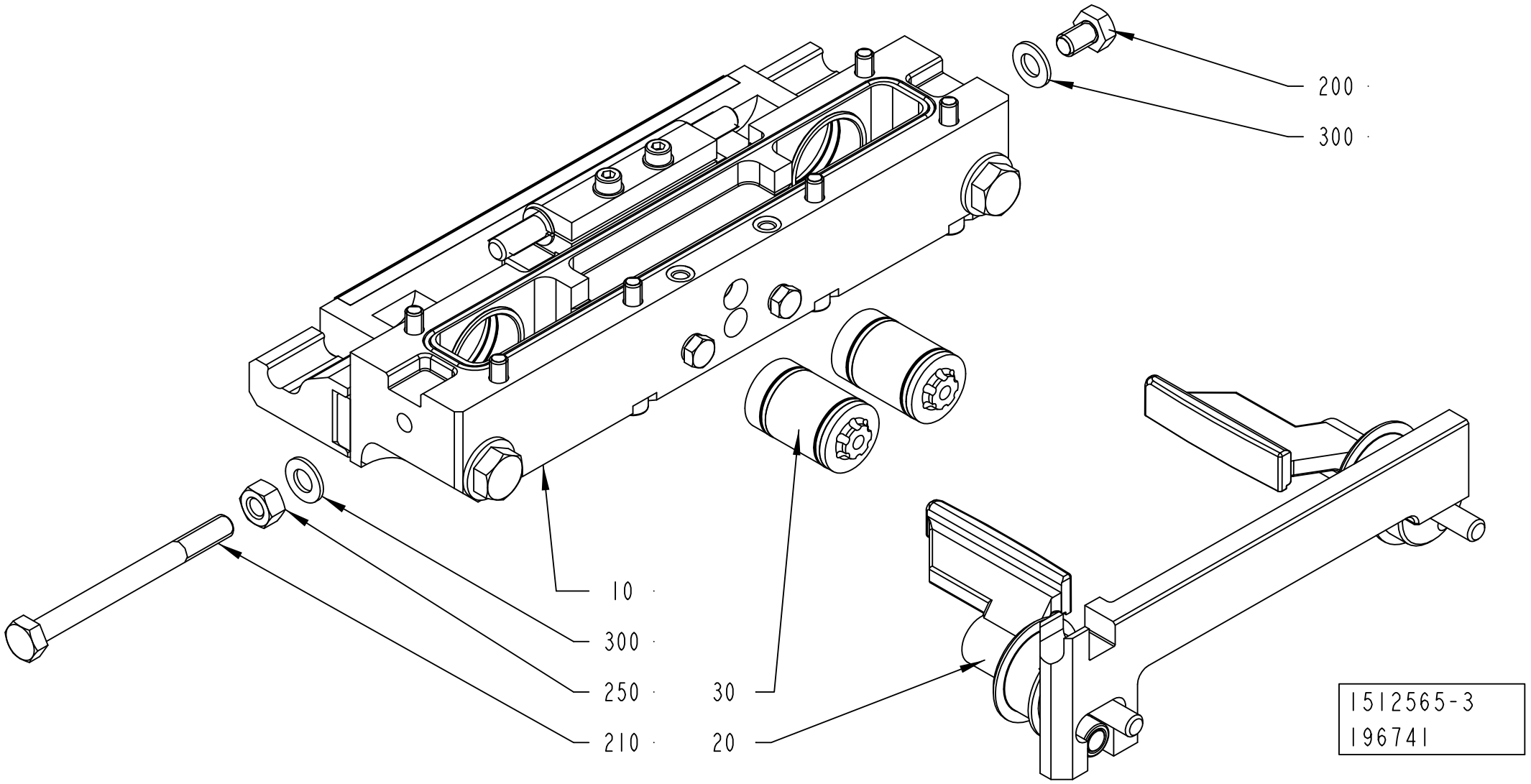
200
300
10
300
250
210
30
20
1512565-3
196741

ECM: 272004 - 20060831
Group number: 1512565-0300
Assembly Drawing: 1512565-3_1_AA

Pos	Part No	UN	Qty	Description	Page No
-					
010	2552008-0200		1	CUTTING JAW	**4-155, 4-157, 4-159, 4-161, 4-163**
020	2552009-0100		1	FOLDING FLAP LEFT	**4-165, 4-167, 4-169, 4-171**
030	2552010-0200		2	PISTON	**4-173**
200	312105-0447		1	SCREW M6S ISO 4017 M8X12 A480	
210	312105-0469		1	SCREW M6S ISO 4014 M8X90 A480	
250	312605-0318		1	HEXAGON NUT, M6M M8 A280	
300	315105-0165		2	WASHER BRB 8,4X16 RFR	

Pos	Part No	UN	Qty	Description	Page No

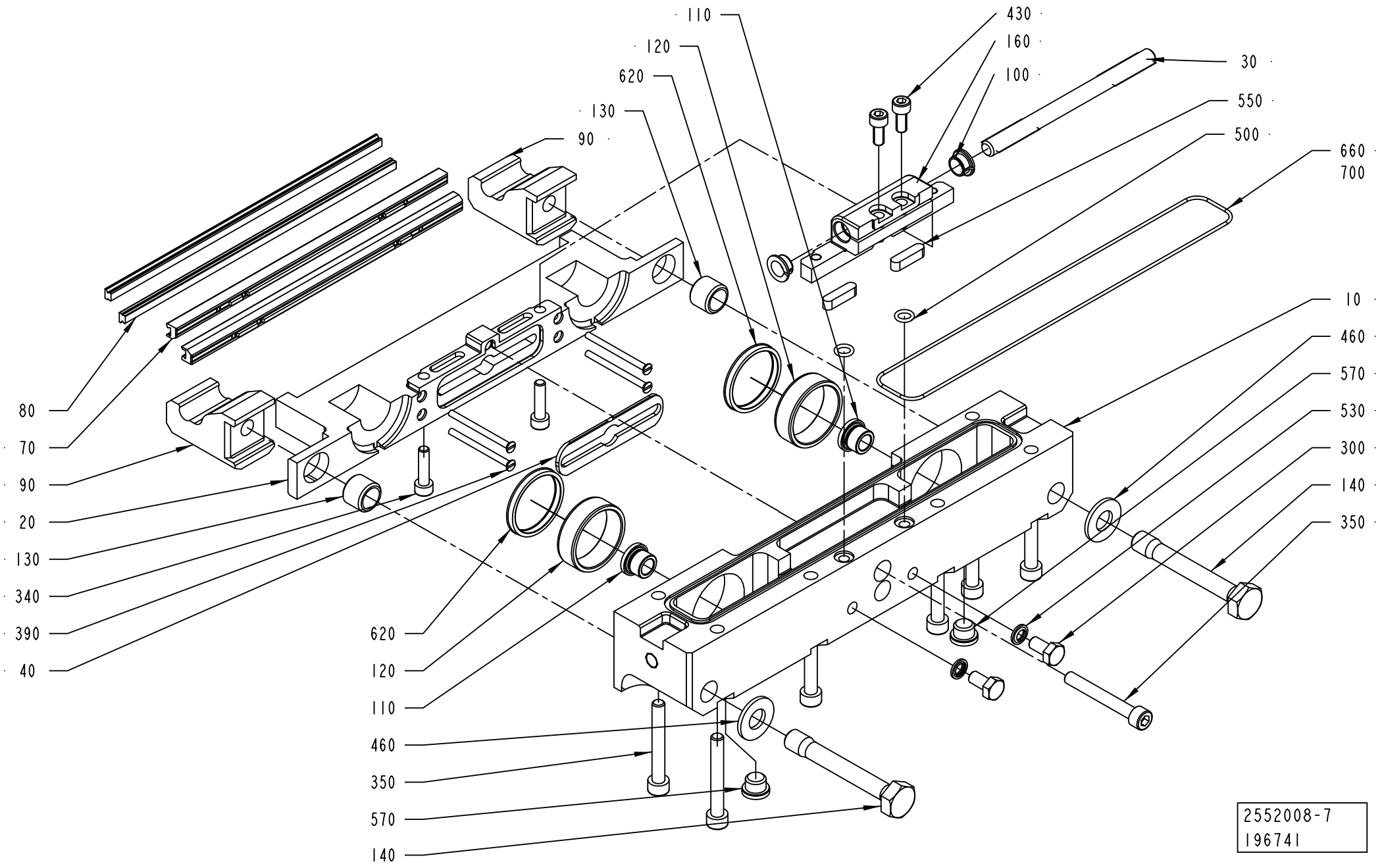
110
120
620
130
90
430
160
100
30
550
500
660
700
10
460
570
530
300
140
350
80
70
90
20
130
340
390
40
620
120
110
460
350
570
140
2552008-7
196741

ECM: 370698 - 20090101
Group number: 2552008-0200
Assembly Drawing: 2552008-7_1_AA

This list covers pages from 4-154 to 4-163

Pos	Part No	UN	Qty	Description	Page No
TPA 1000SQ NOQC (See drawing on page: 4-158)					
010	2775285-0000		1	BEARING HOUSING	
020	2579988-0000		1	CUTTING JAW	
030	2579990-0000		1	SHAFT	
040	1487619-0000		1	PLATE	
070	1520494-0000		2	CUTTING RAIL	
080	1520633-0002		2	DOLLY	
090	1538348-0000		2	CATCH	
100	2531703-0000		2	BUSHING	
120	1255389-0000		2	BUSHING	
140	1035871-0000		2	SCREW	
150	2503699-0000		1	VOLUME BULGE	
390	312145-0238		2	SCREW ISO 2009 MFS M3X40 A4	
400	312145-0236		2	SCREW ISO 2009 MFS M3X35 A4	
410	312155-0287		2	SCREW DIN 7991 MF6S M4X8 A4 70	
430	312115-0327		2	SCREW ISO4762 M5X12 A4 80	
500	315202-0104		2	O-RING 6,1X1,6 MM	
620	90091-0361		2	SCRAPER, EXCLUDER2 30X34,8X3,7 MM	
660	90242-0093	MM	550	O-RING MATERIAL 1,5 MM	
TPA 1000SQ QC, TPA 0750SQ QC (See drawing on page: 4-158)					
010	2775285-0000		1	BEARING HOUSING	
020	2658265-0000		1	CUTTING JAW	
040	1487619-0000		1	PLATE	
070	1520494-0000		2	CUTTING RAIL	
080	1520633-0002		2	DOLLY	
090	1538348-0000		2	CATCH	
120	1255389-0000		2	BUSHING	
140	1035871-0000		2	SCREW	
390	312145-0238		2	SCREW ISO 2009 MFS M3X40 A4	
400	312145-0236		2	SCREW ISO 2009 MFS M3X35 A4	
500	315202-0104		2	O-RING 6,1X1,6 MM	
620	90091-0361		2	SCRAPER, EXCLUDER2 30X34,8X3,7 MM	
660	90242-0093	MM	550	O-RING MATERIAL 1,5 MM	
TBA 0200B QC, TBA 0330S QC, TBA 0250B QC (See drawing on page: 4-156)					
010	2774548-0000		1	BEARING HOUSING	
020	2604564-0000		1	CUTTING JAW	
050	1484002-0000		1	PLATE	
060	1484003-0000		1	PLATE	
070	1520493-0000		2	CUTTING RAIL	
080	1110083-0002		2	DOLLY	
090	1538348-0000		2	CATCH	
120	1255389-0000		2	BUSHING	
140	1035871-0000		2	SCREW	
390	312145-0234		4	SCREW ISO 2009 MFS M3X30 A4	
500	315202-0104		2	O-RING 6,1X1,6 MM	
620	90091-0361		2	SCRAPER, EXCLUDER2 30X34,8X3,7 MM	
660	90242-0093	MM	550	O-RING MATERIAL 1,5 MM	
TBA 0200M QC, TBA 0250S QC (See drawing on page: 4-160)					
010	2775286-0000		1	BEARING HOUSING	
020	2645568-0000		1	CUTTING JAW	
050	1484002-0000		1	PLATE	
060	1484003-0000		1	PLATE	
070	1520493-0000		2	CUTTING RAIL	
080	1110083-0002		2	DOLLY	
090	1538348-0000		2	CATCH	
390	312145-0234		4	SCREW ISO 2009 MFS M3X30 A4	
TBA 0200S (See drawing on page: 4-158)					
010	2775290-0000		1	BEARING HOUSING	
020	2513014-0000		1	CUTTING JAW	
030	2513013-0000		1	SHAFT	
050	1484002-0000		1	PLATE	
060	1484003-0000		1	PLATE	
070	1520493-0000		2	CUTTING RAIL	
080	1110083-0002		2	DOLLY	
090	1538348-0000		2	CATCH	
100	2531703-0000		2	BUSHING	
120	1255389-0000		2	BUSHING	
140	1035871-0000		2	SCREW	
390	312145-0234		4	SCREW ISO 2009 MFS M3X30 A4	
430	312115-0329		2	SCREW ISO4762 M5X16 A4 80	
500	315202-0104		2	O-RING 6,1X1,6 MM	
620	90091-0361		2	SCRAPER, EXCLUDER2 30X34,8X3,7 MM	
TBA 0200SQ QC, TBA 0250SQ QC (See drawing on page: 4-156)					
010	2774548-0000		1	BEARING HOUSING	
020	2668319-0000		1	CUTTING JAW	
050	1484002-0000		1	PLATE	
060	1484003-0000		1	PLATE	
070	1520493-0000		2	CUTTING RAIL	
080	1566845-0002		2	DOLLY	
090	1538348-0000		2	CATCH	
120	1255389-0000		2	BUSHING	
140	1035871-0000		2	SCREW	
150	2679952-0000		1	VOLUME BULGE	
390	312145-0234		4	SCREW ISO 2009 MFS M3X30 A4	

Machine Type | Group Description | Used-In | Group Number | Page No

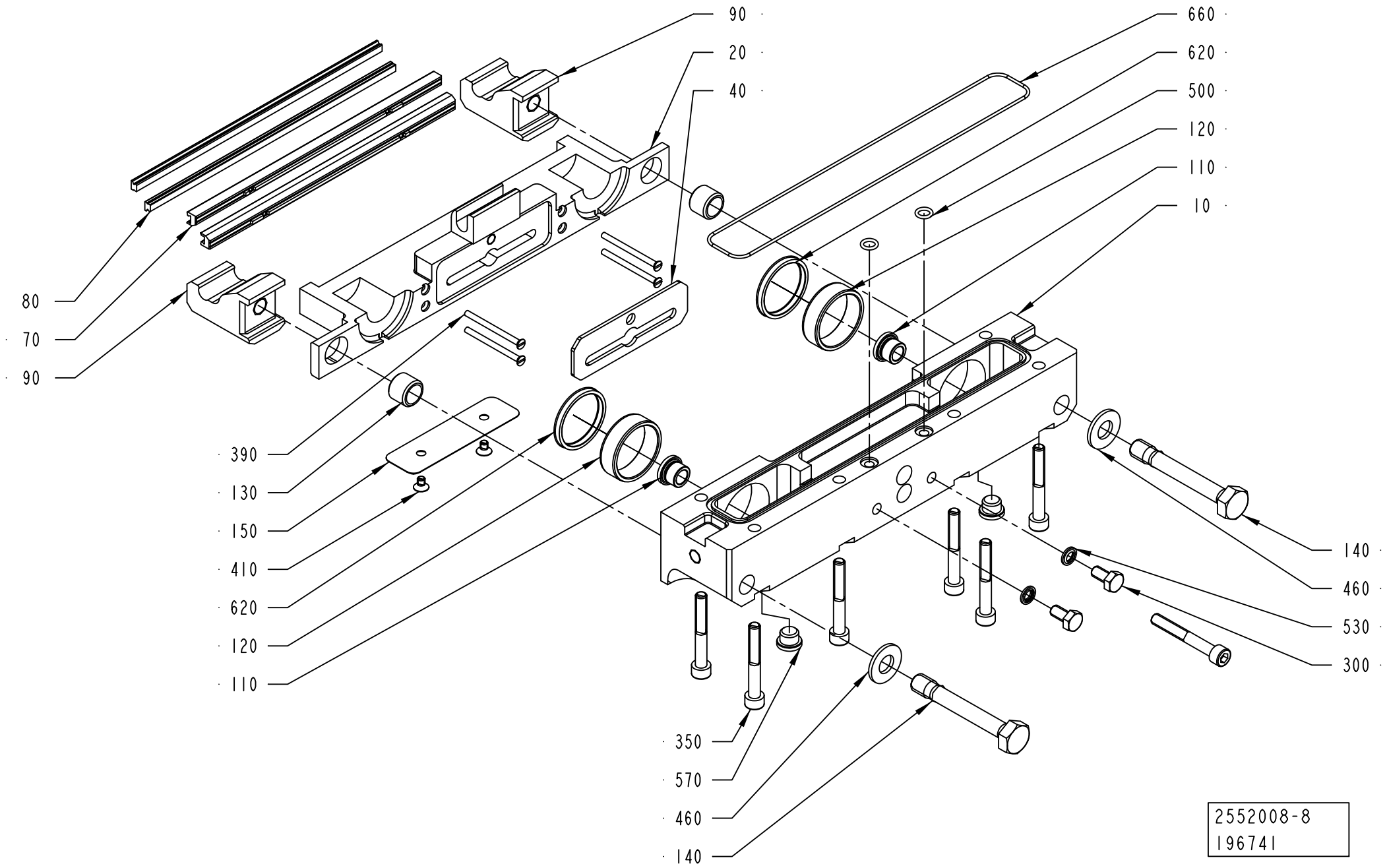
90
20
40
660
620
500
120
110
10
80
70
90
390
130
150
410
620
120
110
140
460
530
300
350
570
460
140
2552008-8
196741

ECM: 370698 - 20090101
Group number: 2552008-0200
Assembly Drawing: 2552008-8_1_AA

This list covers pages from 4-154 to 4-163

Pos	Part No	UN	Qty	Description	Page No
TBA 0200SQ QC, TBA 0250SQ QC (Cont'd) (See drawing on page: 4-156)					
410	90287-0295		2	SCREW HEX.SOCK.COUNT.MF6S M3X8 A280	
500	315202-0104		2	O-RING 6,1X1,6 MM	
620	90091-0361		2	SCRAPER, EXCLUDER2 30X34,8X3,7 MM	
660	90242-0093	MM	550	O-RING MATERIAL 1,5 MM	
TBA 0500B QC, TBA 1000B QC (See drawing on page: 4-156)					
010	2775287-0000		1	BEARING HOUSING	
020	1487954-0000		1	CUTTING JAW	
040	1349925-0000		1	PLATE	
070	1520455-0000		2	CUTTING RAIL	
080	1110083-0002		2	DOLLY	
090	1538348-0000		2	CATCH	
120	1255389-0000		2	BUSHING	
140	1035871-0000		2	SCREW	
150	1558733-0000		1	VOLUME BULGE	
390	312145-0238		4	SCREW ISO 2009 MFS M3X40 A4	
410	312155-0285		2	SCREW DIN 7991 MF6S M4X6 A4 70	
500	315202-0104		2	O-RING 6,1X1,6 MM	
620	90091-0361		2	SCRAPER, EXCLUDER2 30X34,8X3,7 MM	
660	90242-0093	MM	550	O-RING MATERIAL 1,5 MM	
TBA 0500S (See drawing on page: 4-158)					
010	2775292-0000		1	BEARING HOUSING	
020	2611000-0000		1	CUTTING JAW	
030	2579990-0000		1	SHAFT	
040	1487619-0000		1	PLATE	
070	1520494-0000		2	CUTTING RAIL	
080	1110083-0002		2	DOLLY	
090	1538348-0000		2	CATCH	
100	2531703-0000		2	BUSHING	
120	1255389-0000		2	BUSHING	
140	1035871-0000		2	SCREW	
390	312145-0234		4	SCREW ISO 2009 MFS M3X30 A4	
430	312115-0327		2	SCREW ISO4762 M5X12 A4 80	
500	315202-0104		2	O-RING 6,1X1,6 MM	
620	90091-0361		2	SCRAPER, EXCLUDER2 30X34,8X3,7 MM	
660	90242-0093	MM	550	O-RING MATERIAL 1,5 MM	
TBA 0500SQ QC, TBA 1000SQ QC (See drawing on page: 4-154)					
010	2774547-0000		1	BEARING HOUSING	
020	1487618-0000		1	CUTTING JAW	
040	1487619-0000		1	PLATE	
070	1520494-0000		2	CUTTING RAIL	
080	1110083-0002		2	DOLLY	
090	1538348-0000		2	CATCH	
120	1255389-0000		2	BUSHING	
140	1035871-0000		2	SCREW	
160	2825379-0000		1	HOLDER	
340	312115-0331		2	SCREW ISO4762 M5X20 A4 80	
390	312145-0238		4	SCREW ISO 2009 MFS M3X40 A4	
500	315202-0104		2	O-RING 6,1X1,6 MM	
550	315705-0201		2	PARALLEL KEY W. ROUND ENDS 5X5X20 MM	
620	90091-0361		2	SCRAPER, EXCLUDER2 30X34,8X3,7 MM	
660	90242-0093	MM	550	O-RING MATERIAL 1,5 MM	
TBA 1000B NOQC (See drawing on page: 4-158)					
010	2775287-0000		1	BEARING HOUSING	
020	2665188-0000		1	CUTTING JAW	
030	2526812-0000		1	SHAFT	
040	1349925-0000		1	PLATE	
070	1520455-0000		2	CUTTING RAIL	
080	1110083-0002		2	DOLLY	
090	1538348-0000		2	CATCH	
100	2531703-0000		2	BUSHING	
120	1255389-0000		2	BUSHING	
140	1035871-0000		2	SCREW	
390	312145-0238		4	SCREW ISO 2009 MFS M3X40 A4	
430	312115-0329		2	SCREW ISO4762 M5X16 A4 80	
440	315105-0146		2	WASHER BRB 5,3X10 RFR	
500	315202-0104		2	O-RING 6,1X1,6 MM	
620	90091-0361		2	SCRAPER, EXCLUDER2 30X34,8X3,7 MM	
660	90242-0093	MM	550	O-RING MATERIAL 1,5 MM	
TBA 1000S (See drawing on page: 4-158)					
010	2775288-0000		1	BEARING HOUSING	
020	2559424-0000		1	CUTTING JAW	
030	2526812-0000		1	SHAFT	
040	1349925-0000		1	PLATE	
070	1520455-0000		2	CUTTING RAIL	
080	1110083-0002		2	DOLLY	
090	1538348-0000		2	CATCH	
100	2531703-0000		2	BUSHING	
120	1255389-0000		2	BUSHING	
140	1035871-0000		2	SCREW	
390	312145-0238		4	SCREW ISO 2009 MFS M3X40 A4	
430	312115-0327		2	SCREW ISO4762 M5X12 A4 80	
500	315202-0104		2	O-RING 6,1X1,6 MM	
620	90091-0361		2	SCRAPER, EXCLUDER2 30X34,8X3,7 MM	

Machine Type | Group Description | Used-In | Group Number | Page No

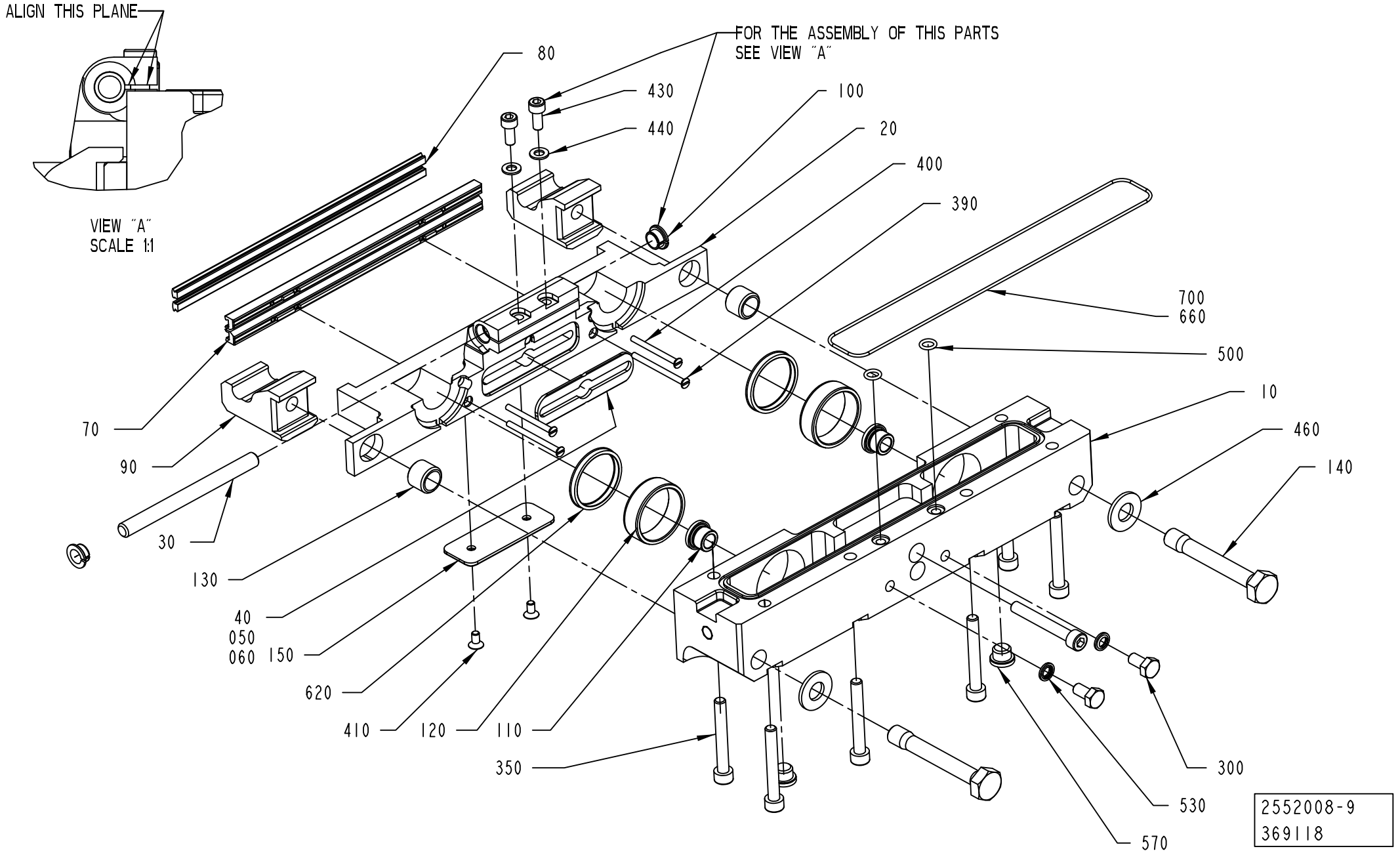
ALIGN THIS PLANE
VIEW "A"
SCALE 1:1
FOR THE ASSEMBLY OF THIS PARTS
SEE VIEW "A"
80
430
440
100
20
400
390
700
660
500
10
460
140
70
90
30
130
40
050
060
150
620
410
120
110
350
300
530
570
2552008-9
369118

ECM: 370698 - 20090101
Group number: 2552008-0200
Assembly Drawing: 2552008-9_1_AB

This list covers pages from 4-154 to 4-163

Pos	Part No	UN	Qty	Description	Page No
TBA 1000S (Cont'd) (See drawing on page: 4-158)					
660	90242-0093	MM	550	O-RING MATERIAL 1,5 MM	
TBA 1000SQ NOQC (See drawing on page: 4-154)					
010	2774547-0000		1	BEARING HOUSING	
020	1487618-0000		1	CUTTING JAW	
030	2526812-0000		1	SHAFT	
040	1487619-0000		1	PLATE	
070	1520494-0000		2	CUTTING RAIL	
080	1110083-0002		2	DOLLY	
090	1538348-0000		2	CATCH	
100	2531703-0000		2	BUSHING	
120	1255389-0000		2	BUSHING	
140	1035871-0000		2	SCREW	
160	2526810-0000		1	HOLDER	
340	312115-0331		2	SCREW ISO4762 M5X20 A4 80	
390	312145-0238		4	SCREW ISO 2009 MFS M3X40 A4	
430	312115-0327		2	SCREW ISO4762 M5X12 A4 80	
500	315202-0104		2	O-RING 6,1X1,6 MM	
550	315705-0201		2	PARALLEL KEY W. ROUND ENDS 5X5X20 MM	
620	90091-0361		2	SCRAPER, EXCLUDER2 30X34,8X3,7 MM	
660	90242-0093	MM	550	O-RING MATERIAL 1,5 MM	
TBA 1500S (See drawing on page: 4-158)					
010	2775287-0000		1	BEARING HOUSING	
020	2570301-0000		1	CUTTING JAW	
030	2526812-0000		1	SHAFT	
040	1349925-0000		1	PLATE	
070	1520455-0000		2	CUTTING RAIL	
080	1110083-0002		2	DOLLY	
090	1538348-0000		2	CATCH	
100	2531703-0000		2	BUSHING	
120	1255389-0000		2	BUSHING	
140	1035871-0000		2	SCREW	
390	312145-0238		4	SCREW ISO 2009 MFS M3X40 A4	
430	312115-0327		2	SCREW ISO4762 M5X12 A4 80	
500	315202-0104		2	O-RING 6,1X1,6 MM	
620	90091-0361		2	SCRAPER, EXCLUDER2 30X34,8X3,7 MM	
660	90242-0093	MM	550	O-RING MATERIAL 1,5 MM	
TBA 1890S QC, TBA 2000S QC, TBA 1400B (See drawing on page: 4-158)					
010	2775283-0000		1	BEARING HOUSING	
020	2664762-0000		1	CUTTING JAW	
030	2686144-0000		1	SHAFT	
040	2588292-0000		1	PLATE	
070	1533051-0000		2	CUTTING RAIL	
080	1520633-0005		2	DOLLY	
090	2566339-0000		2	CATCH	
100	2531703-0000		2	BUSHING	
120	2588299-0000		2	BUSHING	
140	2588303-0000		2	SCREW	
390	312145-0238		8	SCREW ISO 2009 MFS M3X40 A4	
430	312115-0325		2	SCREW ISO4762 M5X10 A4 80	
500	315204-0105		2	O-RING 7,1X1,6 MM	
620	90091-0361		2	SCRAPER, EXCLUDER2 30X34,8X3,7 MM	
660	90459-2363		1	O-RING MATERIAL 1,78 MM	
TGA 1000SQ, TGA 0750SQ, TGA 0500SQ (See drawing on page: 4-162)					
010	2660286-0000		1	BEARING HOUSING	
020	2649674-0000		1	CUTTING JAW	
040	1349925-0000		1	PLATE	
070	1520494-0000		2	CUTTING RAIL	
080	1520633-0002		2	DOLLY	
090	1538348-0000		2	CATCH	
120	2612738-0000		2	BUSHING	
140	1035871-0000		2	SCREW	
150	2698631-0000		1	VOLUME BULGE	
400	312145-0236		4	SCREW ISO 2009 MFS M3X35 A4	
410	312105-0370		1	SCREW M6S ISO 4017 M6X20 A480	
450	315105-0153		1	WASHER BRB 6,4X12 RFR	
TPA 0200SQ QC, TPA 0250SQ QC (See drawing on page: 4-156)					
010	2775290-0000		1	BEARING HOUSING	
020	2674336-0000		1	CUTTING JAW	
050	1484002-0000		1	PLATE	
060	1484003-0000		1	PLATE	
070	1520493-0000		2	CUTTING RAIL	
080	1110083-0002		2	DOLLY	
090	1538348-0000		2	CATCH	
120	1255389-0000		2	BUSHING	
140	1035871-0000		2	SCREW	
390	312145-0234		4	SCREW ISO 2009 MFS M3X30 A4	
500	315202-0104		2	O-RING 6,1X1,6 MM	
620	90091-0361		2	SCRAPER, EXCLUDER2 30X34,8X3,7 MM	
660	90242-0093	MM	550	O-RING MATERIAL 1,5 MM	
TPA 0330SQ (See drawing on page: 4-158)					
010	2775293-0000		1	BEARING HOUSING	
020	2611710-0000		1	CUTTING JAW	
030	2513013-0000		1	SHAFT	

Machine Type | Group Description | Used-In | Group Number | Page No

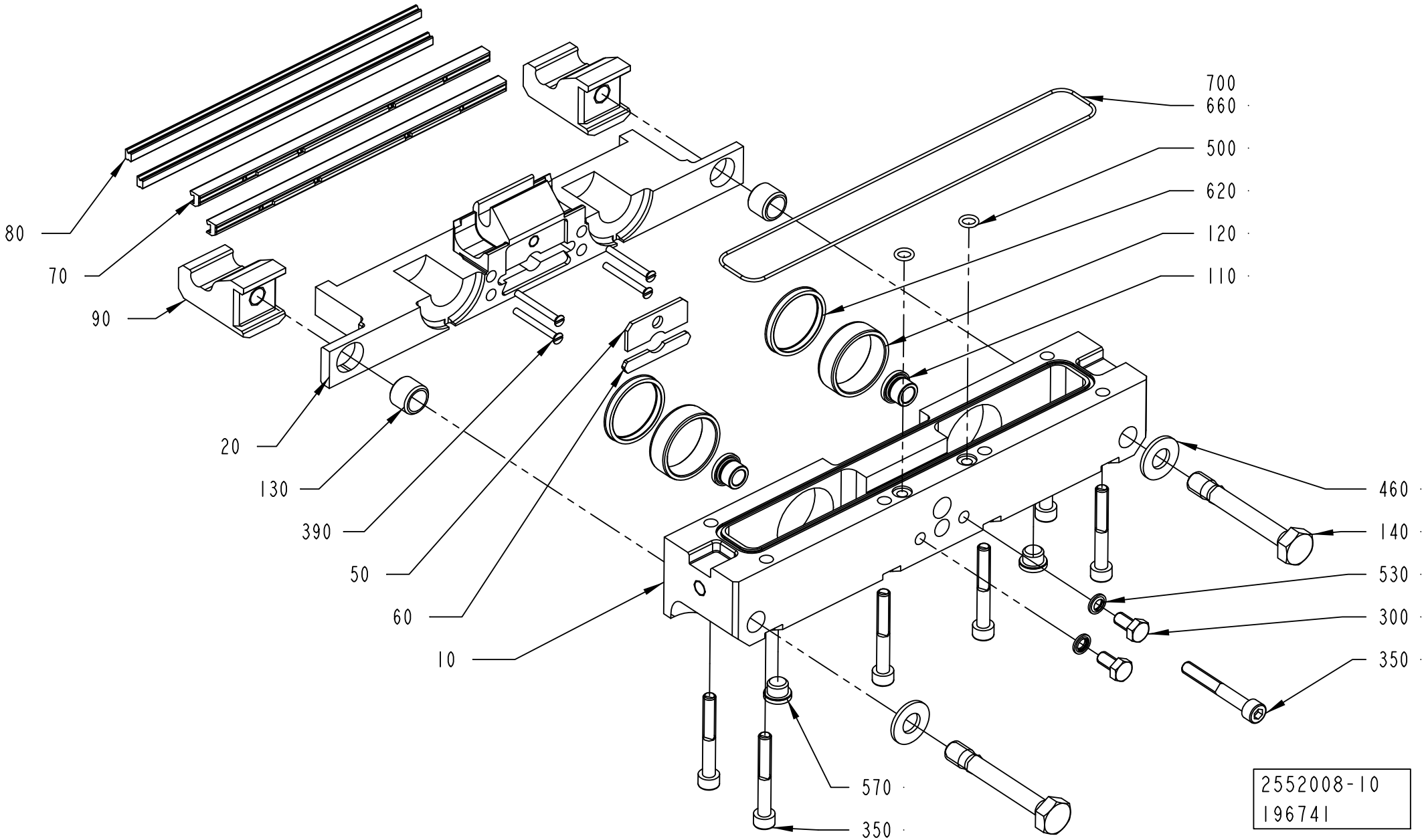
700
660
500
620
120
110
80
70
90
20
130
390
50
60
10
460
140
530
300
350
570
350
2552008-10
196741

Pos	Part No	UN	Qty	Description	Page No
TPA 0330SQ (Cont'd) (See drawing on page: 4-158)					
050	1484002-0000		1	PLATE	
060	1484003-0000		1	PLATE	
070	1520493-0000		2	CUTTING RAIL	
080	1110083-0002		2	DOLLY	
090	1538348-0000		2	CATCH	
100	2531703-0000		2	BUSHING	
120	1255389-0000		2	BUSHING	
140	1035871-0000		2	SCREW	
390	312145-0234		4	SCREW ISO 2009 MFS M3X30 A4	
430	312115-0327		2	SCREW ISO4762 M5X12 A4 80	
500	315202-0104		2	O-RING 6,1X1,6 MM	
620	90091-0361		2	SCRAPER, EXCLUDER2 30X34,8X3,7 MM	
660	90242-0093	MM	550	O-RING MATERIAL 1,5 MM	
TPA 0500SQ (See drawing on page: 4-158)					
010	2775284-0000		1	BEARING HOUSING	
020	2570850-0000		1	CUTTING JAW	
030	2513013-0000		1	SHAFT	
050	1484002-0000		1	PLATE	
060	1484003-0000		1	PLATE	
070	1520493-0000		2	CUTTING RAIL	
080	1110083-0002		2	DOLLY	
090	1538348-0000		2	CATCH	
100	2570849-0000		2	BUSHING	
120	1255389-0000		2	BUSHING	
140	1035871-0000		2	SCREW	
150	2503689-0000		1	VOLUME BULGE	
390	312145-0238		4	SCREW ISO 2009 MFS M3X40 A4	
410	312155-0287		2	SCREW DIN 7991 MF6S M4X8 A4 70	
430	312115-0327		2	SCREW ISO4762 M5X12 A4 80	
500	315202-0104		2	O-RING 6,1X1,6 MM	
620	90091-0361		2	SCRAPER, EXCLUDER2 30X34,8X3,7 MM	
660	90242-0093	MM	550	O-RING MATERIAL 1,5 MM	
Common Parts					
110	1255390-0000		2	BUSHING	
130	1036494-0000		2	GUIDE BUSHING	
300	312105-0366		2	SCREW M6S ISO 4017 M6X12 A480	
350	312115-0379		7	SCREW ISO4762 M6X45 A4 80	
460	315105-0173		2	WASHER BRB 10,5X22 RFR	
530	315211-0103		2	BONDED SEAL SS/NBR90 M6	
570	342713-0209		2	PLUG (QUANT.MINIMA= 10PC).	
700	90153-0015		1	ADHESIVE,LOCTITE IS 496/CYANOLOT 303	

Pos	Part No	UN	Qty	Description	Page No

Machine Type Group Description Used-In Group Number Page No

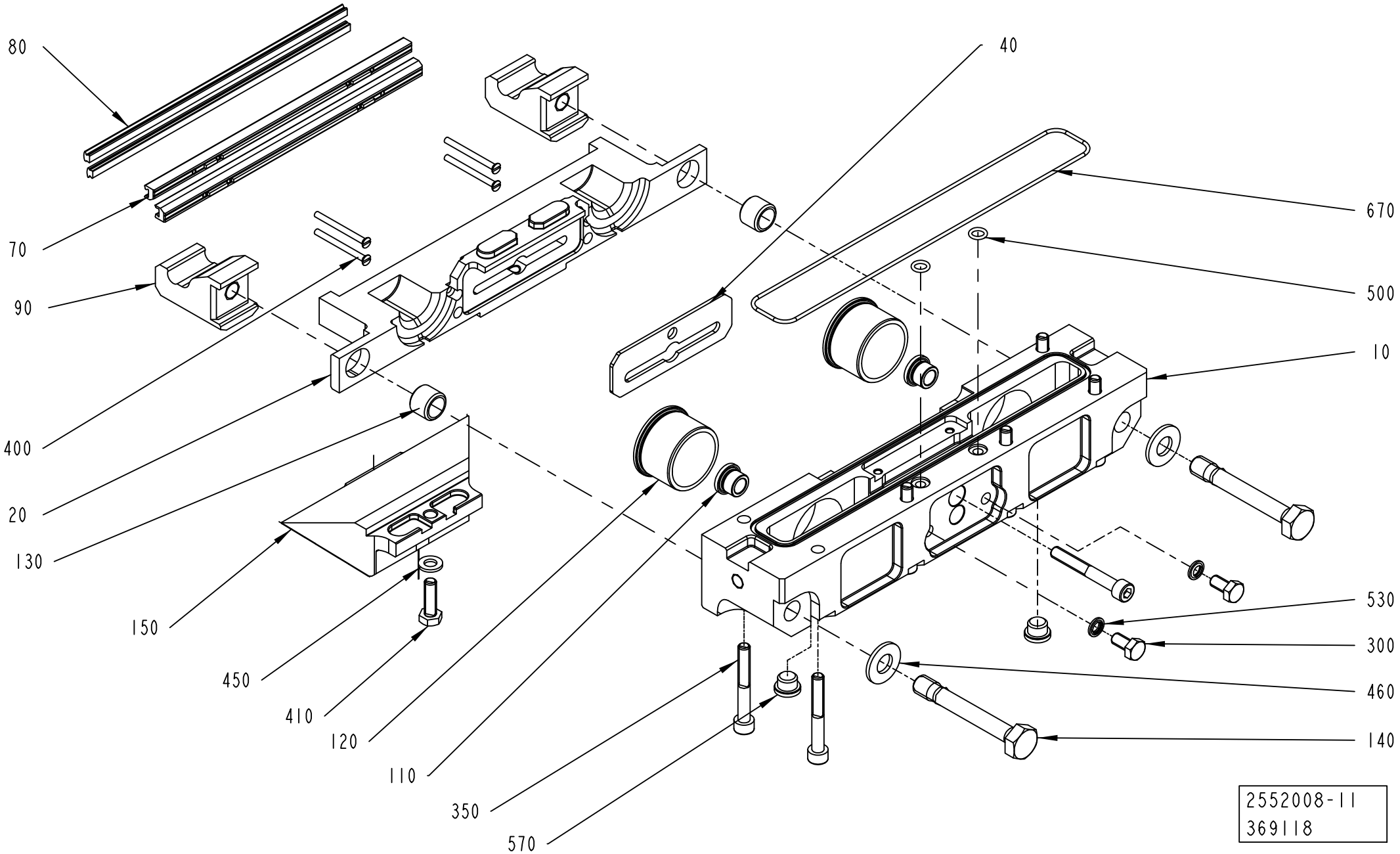
80
70
90
400
20
130
150
450
410
120
110
350
570
40
670
500
10
530
300
460
140
2552008-11
369118

ECM: 370698 - 20090101
Group number: 2552008-0200
Assembly Drawing: 2552008-11_1_AB

This list covers pages from 4-154 to 4-163

Pos	Part No	UN	Qty	Description	Page No
SEE PREVIOUS LISTS PAGES: 4-155, 4-157, 4-159, 4-161.					

Pos	Part No	UN	Qty	Description	Page No

FOLDING FLAP LEFT

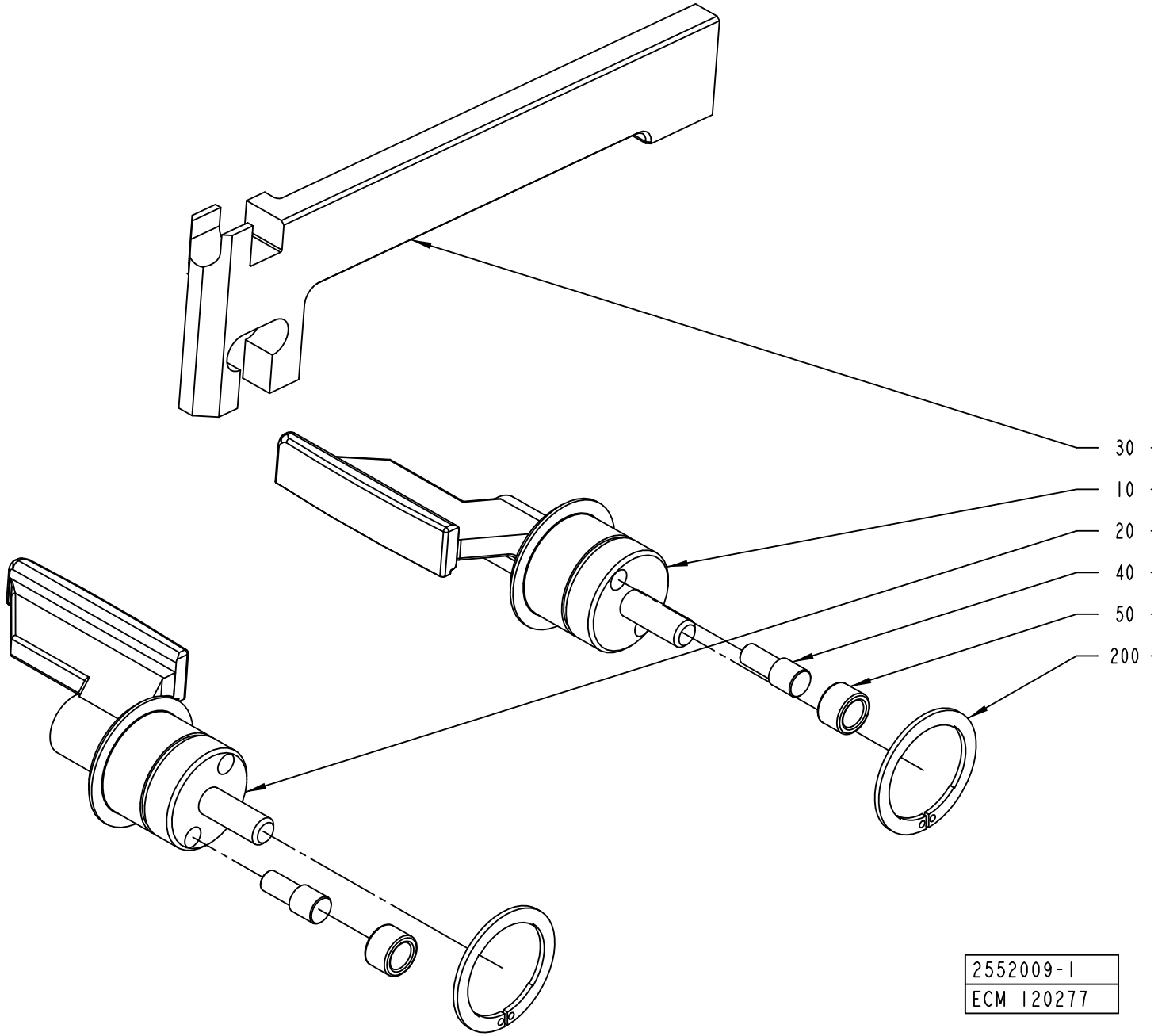

ECM: 320892 - 20080101
Group number: 2552009-0100
Assembly Drawing: 2552009-1_1_AA

This list covers pages from 4-164 to 4-171

Pos	Part No	UN	Qty	Description	Page No
TPA 0330SQ (See drawing on page: 4-164)					
010	2507096-0000		1	FOLDING FLAP	
020	2507097-0000		1	FOLDING FLAP	
030	1538256-0000		1	CARRIER RULER	
TPA 0500SQ (See drawing on page: 4-164)					
010	1549822-0000		1	FOLDING FLAP	
020	1549823-0000		1	FOLDING FLAP	
030	1549824-0000		1	CARRIER RULER	
TPA 1000SQ NOQC, TPA 1000SQ QC, TPA 0750SQ QC (See drawing on page: 4-164)					
010	1523146-0000		1	FOLDING FLAP	
020	1523147-0000		1	FOLDING FLAP	
030	1523177-0000		1	CARRIER RULER	
TBA 0200B QC, TBA 0330S QC (See drawing on page: 4-164)					
010	2605875-0000		1	FOLDING FLAP	
020	2605876-0000		1	FOLDING FLAP	
030	1255459-0000		1	CARRIER RULER	
TBA 0200M QC, TBA 0250S QC					
010	2624554-0000		1	FOLDING FLAP	
020	2624555-0000		1	FOLDING FLAP	
030	2520470-0000		1	CARRIER RULER	
TBA 0200S (See drawing on page: 4-164)					
010	2624554-0000		1	FOLDING FLAP	
020	2624555-0000		1	FOLDING FLAP	
030	1255458-0000		1	CARRIER RULER	
TBA 0200SQ QC, TBA 0250SQ QC (See drawing on page: 4-164)					
010	2668313-0000		1	FOLDING FLAP	
020	2668314-0000		1	FOLDING FLAP	
030	2736138-0000		1	CARRIER RULER	
TBA 0250B QC					
010	2605875-0000		1	FOLDING FLAP	
020	2605876-0000		1	FOLDING FLAP	
030	1255459-0000		1	CARRIER RULER	
TBA 0500B NOQC, TBA 1000B NOQC NOMOLDEDCAP (See drawing on page: 4-164)					
010	1511697-0000		1	FOLDING FLAP	
020	1511698-0000		1	FOLDING FLAP	
030	1255457-0000		1	CARRIER RULER	
TBA 0500B QC, TBA 1000B QC (See drawing on page: 4-164)					
010	1511352-0000		1	FOLDING FLAP	
020	1511351-0000		1	FOLDING FLAP	
030	1255457-0000		1	CARRIER RULER	
TBA 0500S (See drawing on page: 4-164)					
010	2507085-0000		1	FOLDING FLAP	
020	2507086-0000		1	FOLDING FLAP	
030	1511067-0000		1	CARRIER RULER	
TBA 0500SQ QC, TBA 1000SQ QC (See drawing on page: 4-170)					
010	2843851-0000		1	FOLDING FLAP	
020	2843850-0000		1	FOLDING FLAP	
030	1360318-0000		1	CARRIER RULER	
070	2843780-0000		2	PLATE	
260	312105-0323		4	SCREW M6S ISO 4017 M5X8 A480	
TBA 1000B NOQC STDA7 (See drawing on page: 4-164)					
010	1511697-0000		1	FOLDING FLAP	
020	1511698-0000		1	FOLDING FLAP	
030	1255457-0000		1	CARRIER RULER	
TBA 1000S NOMOLDEDCAP, TBA 1000S STDA7, TBA 1000S LIGHTCAP (See drawing on page: 4-164)					
010	1511699-0000		1	FOLDING FLAP	
020	1511700-0000		1	FOLDING FLAP	
030	1255460-0000		1	CARRIER RULER	
TBA 1000SQ NOQC (See drawing on page: 4-164)					
010	2507076-0000		1	FOLDING FLAP	
020	2507077-0000		1	FOLDING FLAP	
030	1360318-0000		1	CARRIER RULER	
TBA 1500S (See drawing on page: 4-164)					
010	2507092-0000		1	FOLDING FLAP	
020	2507093-0000		1	FOLDING FLAP	
030	1255457-0000		1	CARRIER RULER	
TBA 1890S QC, TBA 2000S QC, TBA 1400B (See drawing on page: 4-166)					
010	2566319-0000		1	FOLDING FLAP	
020	2566320-0000		1	FOLDING FLAP	
030	2566318-0000		1	CARRIER RULER	
210	90459-2258		2	SEAL GLYDRING 25,1X30X2,2 MM	
TGA 1000SQ, TGA 0750SQ, TGA 0500SQ (See drawing on page: 4-168)					
010	2660290-0000		1	FOLDING FLAP	
020	2660291-0000		1	FOLDING FLAP	
030	2649664-0000		1	CARRIER RULER	
060	2660294-0000		1	PLATE	
210	90459-2258		2	SEAL GLYDRING 25,1X30X2,2 MM	
250	312145-0287		2	SCREW ISO 2009 MFS M4X8 A4	
TPA 0200SQ QC, TPA 0250SQ QC					
010	2728883-0000		1	OLDING FLAP	
020	2728884-0000		1	OLDING FLAP	
030	1255458-0000		1	CARRIER RULER	
Common Parts					
040	22462-0000		2	SHAFT	

Machine Type | Group Description | Used-In | Group Number | Page No

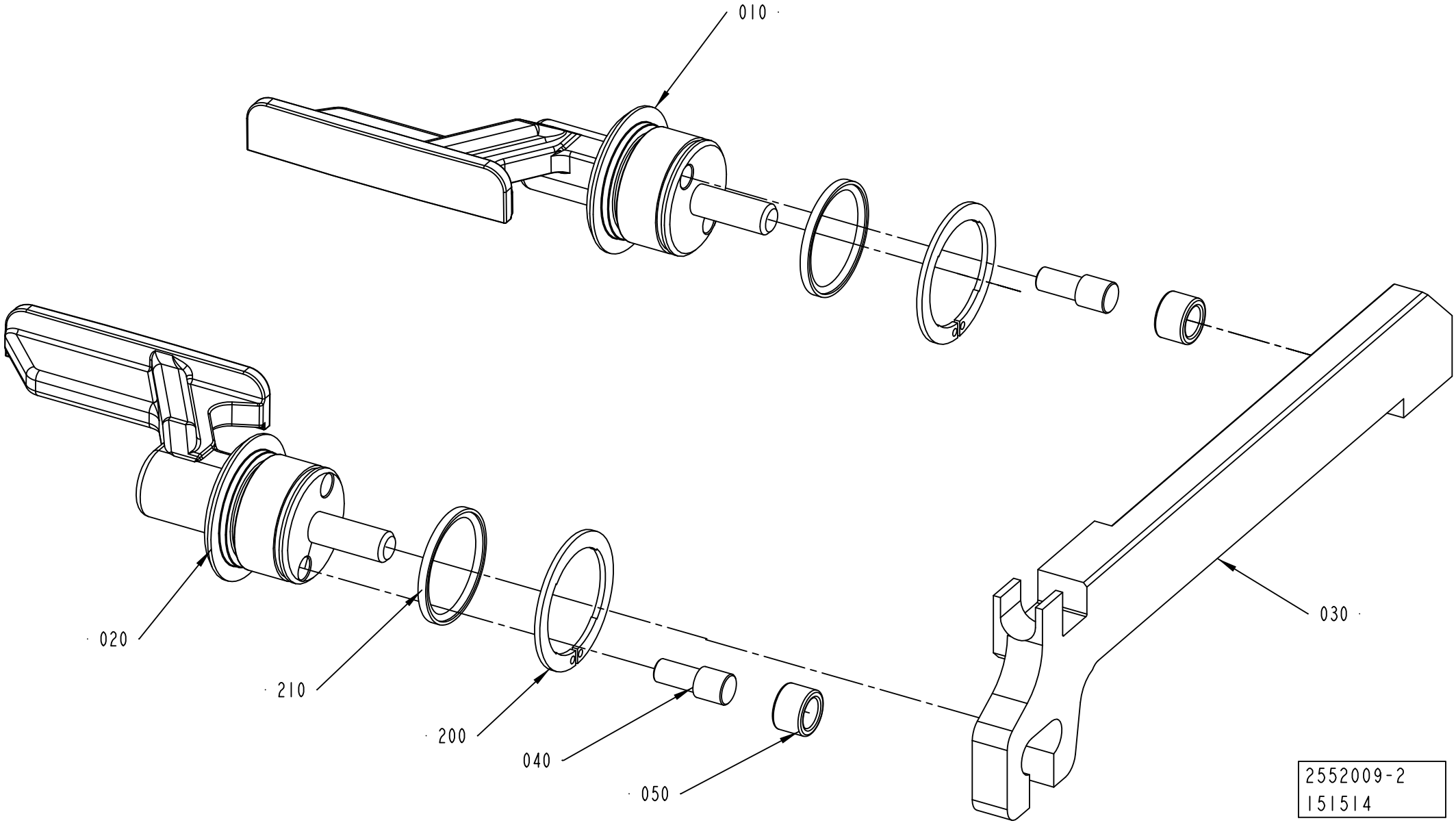
010
020
210
200
040
050
030
2552009-2
151514

ECM: 320892 - 20080101
Group number: 2552009-0100
Assembly Drawing: 2552009-2_1_AA

This list covers pages from 4-164 to 4-171

Pos	Part No	UN	Qty	Description	Page No
Common Parts (Cont'd)					
050	22463-0000		2	ROLL	
200	90141-0029		2	CIRCLIP	

Pos	Part No	UN	Qty	Description	Page No

FOLDING FLAP LEFT

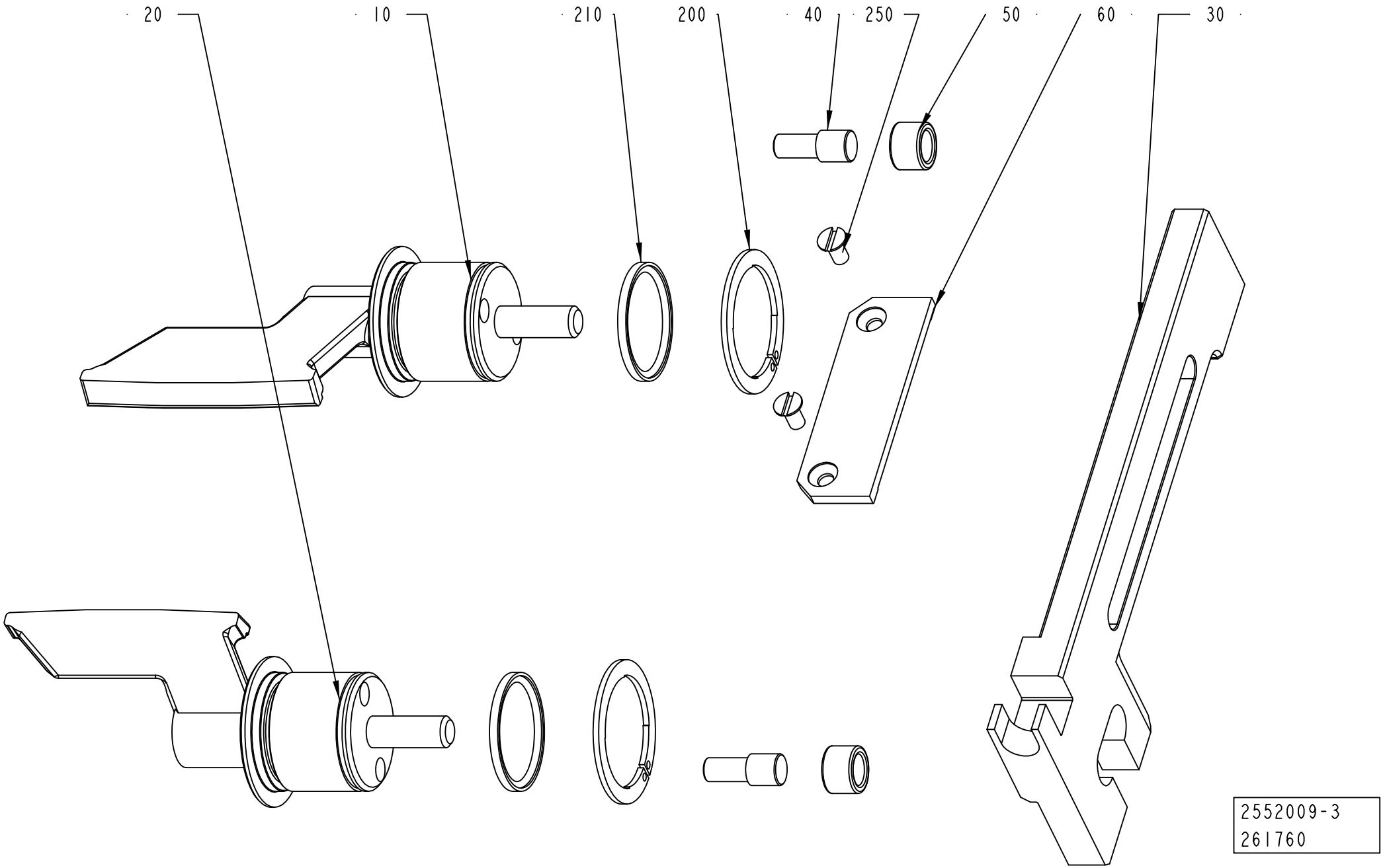

ECM: 320892 - 20080101
Group number: 2552009-0100
Assembly Drawing: 2552009-3_1_AA

This list covers pages from 4-164 to 4-171

Pos	Part No	UN	Qty	Description	Page No
SEE PREVIOUS LISTS PAGES: 4-165, 4-167.					

Pos	Part No	UN	Qty	Description	Page No

FOLDING FLAP LEFT

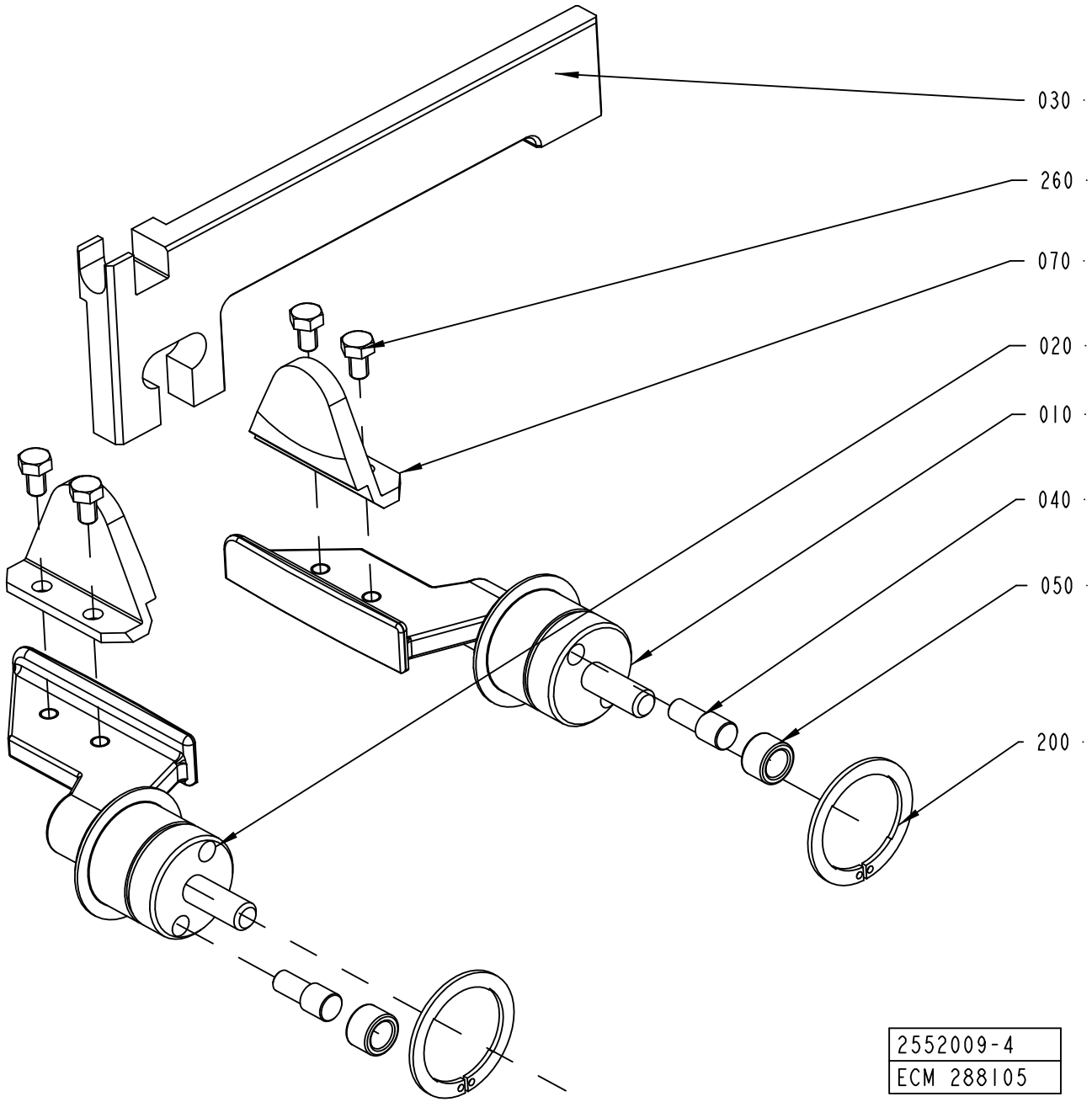

ECM: 320892 - 20080101
Group number: 2552009-0100
Assembly Drawing: 2552009-4_1_AA

This list covers pages from 4-164 to 4-171

Pos	Part No	UN	Qty	Description	Page No
SEE PREVIOUS LISTS PAGES: 4-165, 4-167.					

Pos	Part No	UN	Qty	Description	Page No

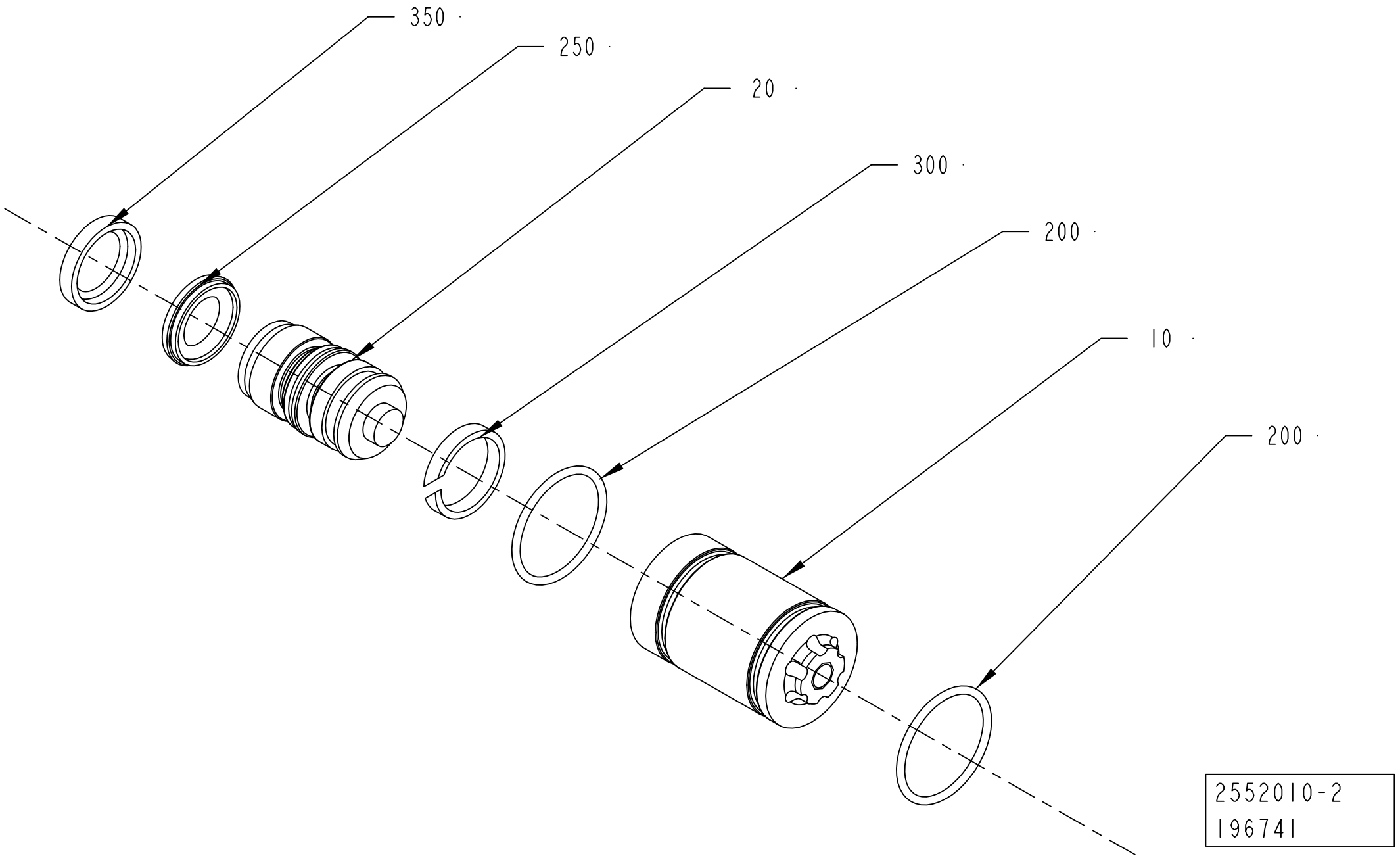
350
250
20
300
200
10
200
2552010-2
196741

ECM: 383393 - 20090402
Group number: 2552010-0200
Assembly Drawing: 2552010-2_1_AA

Pos	Part No	UN	Qty	Description	Page No
TBA 0200M, TBA 0200B, TBA 0200SQ, TBA 0200S, TBA 0250S, TBA 0250B, TBA 0330S, TPA 0330SQ, TPA 0250SQ, TPA 0200SQ, TBA 0250SQ					
010	752288-0000		1	SLEEVE	
020	2737771-0000		1	PLUNGER	
200	315202-0110		1	O-RING 12,1X1,6 MM	
250	90459-6021		1	PISTON SEAL STEPSEAL 7,2X12X2,2 MM	
300	90459-6027		1	WEAR RING 9X12X3,2 MM	
350	90459-6025		1	PISTON SEAL 6,2X12X3,2 MM	
TBA 0500S, TBA 0500SQ, TBA 0500B, TBA 1000B, TBA 1000SQ, TBA 1000S, TBA 1500S, TPA 1000SQ, TPA 0500SQ, TGA 1000SQ, TGA 0750SQ, TGA 0500SQ					
010	1036278-0000		1	SLEEVE	
020	2737773-0000		1	PLUNGER	
200	315202-0118		2	O-RING 22,1X1,6 MM	
250	90459-6019		1	PISTON SEAL STEPSEAL 11,5X19X3,2 MM	
300	90459-6026		1	WEAR RING 16X19X3,2 MM	
350	90459-6023		1	PISTON SEAL 13X19X3,2 MM	
TBA 1890S, TBA 2000S, TBA 1400B					
010	2566330-0000		1	SLEEVE	
020	2737772-0000		1	PLUNGER	
200	315202-0119		2	O-RING 25,1X1,6 MM	
250	90459-6022		1	PISTON SEAL STEPSEAL 14,5X22X3,2 MM	
300	90459-5968		1	WEAR RING 19X22X3,2 MM	
350	90459-6024		1	PISTON SEAL 16X22X3,2 MM	

Pos	Part No	UN	Qty	Description	Page No

CARRIER PRESSURE RIGHT

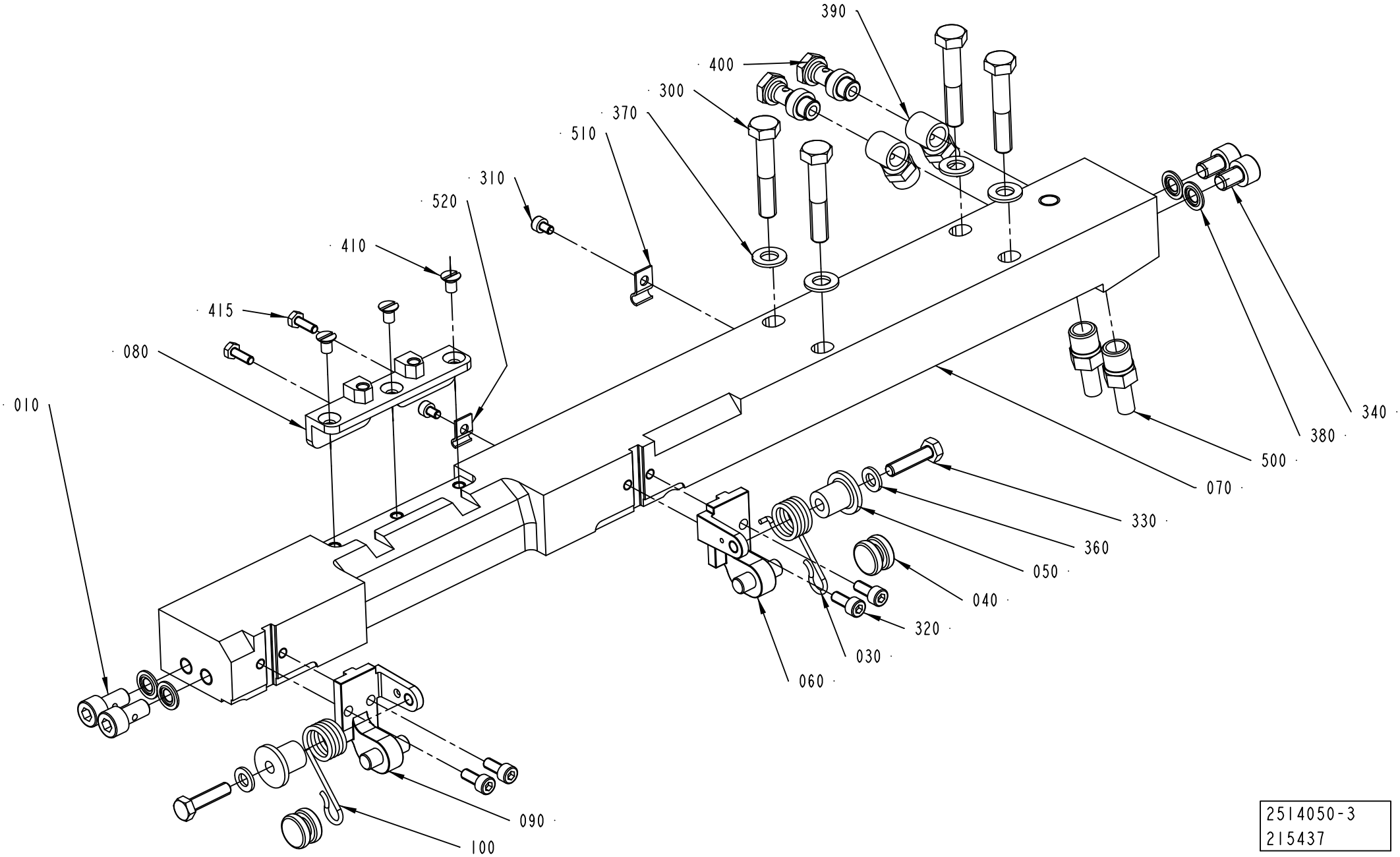

2514050-3
215437

ECM: 998080 - 20081001
Group number: 2514050-0200
Assembly Drawing: 2514050-3_1_AB

This list covers pages from 4-174 to 4-181

Pos	Part No	UN	Qty	Description	Page No
A3/FLEX NOQC (See drawing on page: 4-176)					
070	2514051-0000		1	CARRIER	
310	312115-0285		2	SCREW ISO4762 M4X6 A4 80	
510	90165-0056		1	PIPE CLIP FOR TUBE D=4 MM	
520	90165-0058		1	PIPE CLIP FOR TUBE D=2,5 MM	
A3/FLEX TBA 0200M QC, A3/FLEX TBA 0250S QC (See drawing on page: 4-178)					
070	2514047-0000		1	CARRIER	
080	2641225-0000		1	INSERT	
410	312145-0323		3	SCREW ISO 2009 MFS M5X8 A4	
A3/FLEX TPA 0200SQ QC, A3/FLEX TPA 0250SQ QC, A3/FLEX TBA 0250SQ QC, A3/FLEX TBA 0200SQ QC, A3/FLEX TBA 0500B QC, A3/FLEX TBA 1000B QC, A3/FLEX TBA 0250B QC, A3/FLEX TBA 0200B QC, A3/FLEX TBA 0330S QC (See drawing on page: 4-178)					
070	2514047-0000		1	CARRIER	
080	1549312-0000		1	INSERT	
410	312145-0323		3	SCREW ISO 2009 MFS M5X8 A4	
A3/FLEX TBA 1890S QC, A3/FLEX TBA 2000S QC, A3/FLEX TBA 1400B (See drawing on page: 4-176)					
070	2566341-0000		1	CARRIER	
310	312115-0285		2	SCREW ISO4762 M4X6 A4 80	
510	90165-0056		1	PIPE CLIP FOR TUBE D=4 MM	
520	90165-0058		1	PIPE CLIP FOR TUBE D=2,5 MM	
A3/FLEX TGA 1000SQ, A3/FLEX TGA 0500SQ, A3/FLEX TGA 0750SQ (See drawing on page: 4-180)					
070	2594715-0000		1	CARRIER	
540	311103-0308		1	PARALLEL PIN ISO 2338 5M6X16 A1	
700	90153-0053		1	ADHESIVE, LOCTITE 648 TEMP 150`C 50ML	
A3/FLEX TPA 1000SQ QC, A3/FLEX TPA 0750SQ QC, A3/FLEX TBA 0500SQ QC, A3/FLEX TBA 1000SQ QC (See drawing on page: 4-174)					
070	2647117-0000		1	CARRIER	
080	2647114-0000		1	INSERT	
310	312115-0285		2	SCREW ISO4762 M4X6 A4 80	
410	312145-0323		3	SCREW ISO 2009 MFS M5X8 A4	
415	312105-0291		2	SCREW M6S ISO 4017 M4X12 A470	
510	90165-0056		1	PIPE CLIP FOR TUBE D=4 MM	
520	90165-0058		1	PIPE CLIP FOR TUBE D=2,5 MM	
Common Parts					
010	1036343-0000		2	SCREW	
030	2547589-0000		1	SPRING	
040	2530296-0000		2	ROLLER	
050	2532531-0000		2	ROLLER	
060	2530293-0000		1	BRACKET	
090	2530292-0000		1	BRACKET	
100	2547588-0000		1	SPRING	
300	312105-0460		4	SCREW M6S ISO 4014 M8X45 A480	
320	312115-0327		4	SCREW ISO4762 M5X12 A4 80	
330	312105-0372		2	SCREW M6S ISO 4017 M6X25 A480	
340	312115-0447		2	SCREW ISO4762 M8X12 A4 80	
360	315105-0153		2	WASHER BRB 6,4X12 RFR	
370	315105-0165		4	WASHER BRB 8,4X16 RFR	
380	315211-0104		4	BONDED SEAL SS/NBR90 M8	
390	342980-0121		2	BANJO-CONNECTION,RING 8/6-G1/8	
400	342980-0303		2	BANJO-HOLLOW BOLT COUPL,EXT.THR.01-G1/8	
500	90030-0065		2	PIPE CONNECTION	

Machine Type | Group Description | Used-In | Group Number | Page No

CARRIER PRESSURE RIGHT

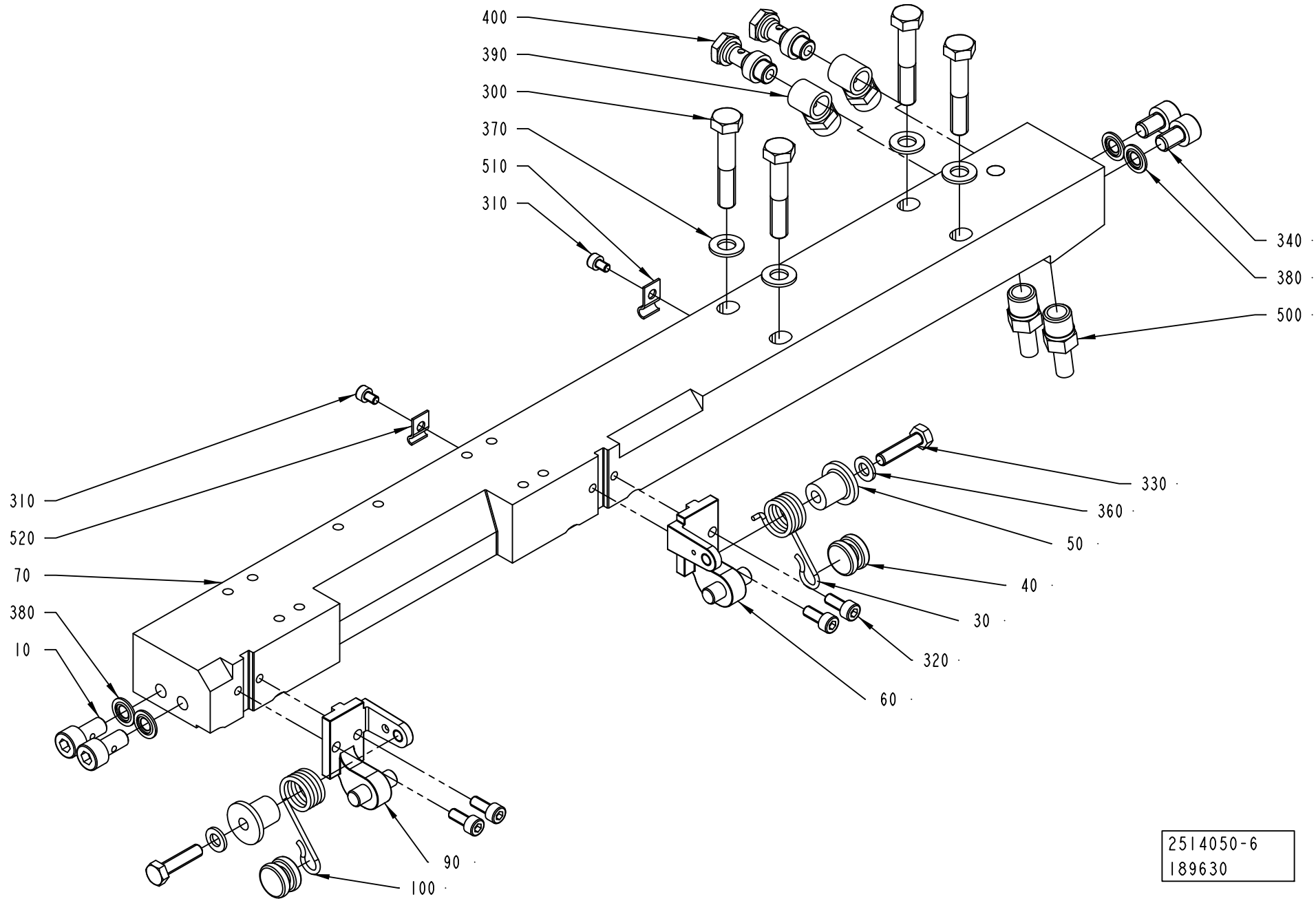

2514050-6
189630

ECM: 998080 - 20081001
Group number: 2514050-0200
Assembly Drawing: 2514050-6_1_AA

This list covers pages from 4-174 to 4-181

Pos	Part No	UN	Qty	Description	Page No
A3/FLEX NOQC (See drawing on page: 4-176)					
070	2514051-0000		1	CARRIER	
310	312115-0285		2	SCREW ISO4762 M4X6 A4 80	
510	90165-0056		1	PIPE CLIP FOR TUBE D=4 MM	
520	90165-0058		1	PIPE CLIP FOR TUBE D=2,5 MM	
A3/FLEX TBA 0200M QC, A3/FLEX TBA 0250S QC (See drawing on page: 4-178)					
070	2514047-0000		1	CARRIER	
080	2641225-0000		1	INSERT	
410	312145-0323		3	SCREW ISO 2009 MFS M5X8 A4	
A3/FLEX TPA 0200SQ QC, A3/FLEX TPA 0250SQ QC, A3/FLEX TBA 0250SQ QC, A3/FLEX TBA 0200SQ QC, A3/FLEX TBA 0500B QC, A3/FLEX TBA 1000B QC, A3/FLEX TBA 0250B QC, A3/FLEX TBA 0200B QC, A3/FLEX TBA 0330S QC (See drawing on page: 4-178)					
070	2514047-0000		1	CARRIER	
080	1549312-0000		1	INSERT	
410	312145-0323		3	SCREW ISO 2009 MFS M5X8 A4	
A3/FLEX TBA 1890S QC, A3/FLEX TBA 2000S QC, A3/FLEX TBA 1400B (See drawing on page: 4-176)					
070	2566341-0000		1	CARRIER	
310	312115-0285		2	SCREW ISO4762 M4X6 A4 80	
510	90165-0056		1	PIPE CLIP FOR TUBE D=4 MM	
520	90165-0058		1	PIPE CLIP FOR TUBE D=2,5 MM	
A3/FLEX TGA 1000SQ, A3/FLEX TGA 0500SQ, A3/FLEX TGA 0750SQ (See drawing on page: 4-180)					
070	2594715-0000		1	CARRIER	
540	311103-0308		1	PARALLEL PIN ISO 2338 5M6X16 A1	
700	90153-0053		1	ADHESIVE, LOCTITE 648 TEMP 150`C 50ML	
A3/FLEX TPA 1000SQ QC, A3/FLEX TPA 0750SQ QC, A3/FLEX TBA 0500SQ QC, A3/FLEX TBA 1000SQ QC (See drawing on page: 4-174)					
070	2647117-0000		1	CARRIER	
080	2647114-0000		1	INSERT	
310	312115-0285		2	SCREW ISO4762 M4X6 A4 80	
410	312145-0323		3	SCREW ISO 2009 MFS M5X8 A4	
415	312105-0291		2	SCREW M6S ISO 4017 M4X12 A470	
510	90165-0056		1	PIPE CLIP FOR TUBE D=4 MM	
520	90165-0058		1	PIPE CLIP FOR TUBE D=2,5 MM	
Common Parts					
010	1036343-0000		2	SCREW	
030	2547589-0000		1	SPRING	
040	2530296-0000		2	ROLLER	
050	2532531-0000		2	ROLLER	
060	2530293-0000		1	BRACKET	
090	2530292-0000		1	BRACKET	
100	2547588-0000		1	SPRING	
300	312105-0460		4	SCREW M6S ISO 4014 M8X45 A480	
320	312115-0327		4	SCREW ISO4762 M5X12 A4 80	
330	312105-0372		2	SCREW M6S ISO 4017 M6X25 A480	
340	312115-0447		2	SCREW ISO4762 M8X12 A4 80	
360	315105-0153		2	WASHER BRB 6,4X12 RFR	
370	315105-0165		4	WASHER BRB 8,4X16 RFR	
380	315211-0104		4	BONDED SEAL SS/NBR90 M8	
390	342980-0121		2	BANJO-CONNECTION,RING 8/6-G1/8	
400	342980-0303		2	BANJO-HOLLOW BOLT COUPL,EXT.THR.01-G1/8	
500	90030-0065		2	PIPE CONNECTION	

Machine Type | Group Description | Used-In | Group Number | Page No

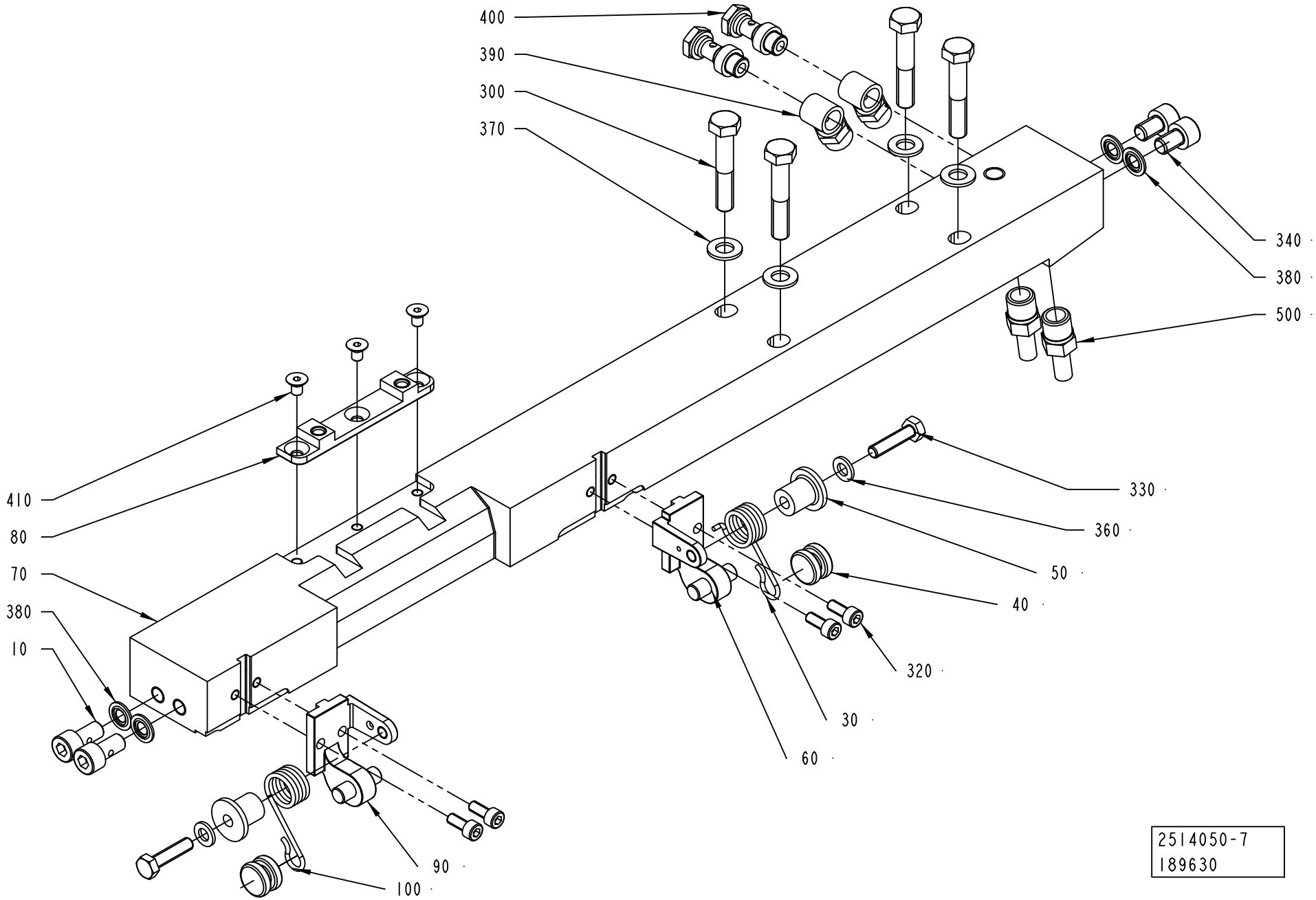
400
390
300
370
340
380
500
410
80
70
380
10
330
360
50
40
320
30
60
90
100
2514050-7
189630

ECM: 998080 - 20081001
Group number: 2514050-0200
Assembly Drawing: 2514050-7_1_AA

This list covers pages from 4-174 to 4-181

Pos	Part No	UN	Qty	Description	Page No
A3/FLEX NOQC (See drawing on page: 4-176)					
070	2514051-0000		1	CARRIER	
310	312115-0285		2	SCREW ISO4762 M4X6 A4 80	
510	90165-0056		1	PIPE CLIP FOR TUBE D=4 MM	
520	90165-0058		1	PIPE CLIP FOR TUBE D=2,5 MM	
A3/FLEX TBA 0200M QC, A3/FLEX TBA 0250S QC (See drawing on page: 4-178)					
070	2514047-0000		1	CARRIER	
080	2641225-0000		1	INSERT	
410	312145-0323		3	SCREW ISO 2009 MFS M5X8 A4	
A3/FLEX TPA 0200SQ QC, A3/FLEX TPA 0250SQ QC, A3/FLEX TBA 0250SQ QC, A3/FLEX TBA 0200SQ QC, A3/FLEX TBA 0500B QC, A3/FLEX TBA 1000B QC, A3/FLEX TBA 0250B QC, A3/FLEX TBA 0200B QC, A3/FLEX TBA 0330S QC (See drawing on page: 4-178)					
070	2514047-0000		1	CARRIER	
080	1549312-0000		1	INSERT	
410	312145-0323		3	SCREW ISO 2009 MFS M5X8 A4	
A3/FLEX TBA 1890S QC, A3/FLEX TBA 2000S QC, A3/FLEX TBA 1400B (See drawing on page: 4-176)					
070	2566341-0000		1	CARRIER	
310	312115-0285		2	SCREW ISO4762 M4X6 A4 80	
510	90165-0056		1	PIPE CLIP FOR TUBE D=4 MM	
520	90165-0058		1	PIPE CLIP FOR TUBE D=2,5 MM	
A3/FLEX TGA 1000SQ, A3/FLEX TGA 0500SQ, A3/FLEX TGA 0750SQ (See drawing on page: 4-180)					
070	2594715-0000		1	CARRIER	
540	311103-0308		1	PARALLEL PIN ISO 2338 5M6X16 A1	
700	90153-0053		1	ADHESIVE, LOCTITE 648 TEMP 150`C 50ML	
A3/FLEX TPA 1000SQ QC, A3/FLEX TPA 0750SQ QC, A3/FLEX TBA 0500SQ QC, A3/FLEX TBA 1000SQ QC (See drawing on page: 4-174)					
070	2647117-0000		1	CARRIER	
080	2647114-0000		1	INSERT	
310	312115-0285		2	SCREW ISO4762 M4X6 A4 80	
410	312145-0323		3	SCREW ISO 2009 MFS M5X8 A4	
415	312105-0291		2	SCREW M6S ISO 4017 M4X12 A470	
510	90165-0056		1	PIPE CLIP FOR TUBE D=4 MM	
520	90165-0058		1	PIPE CLIP FOR TUBE D=2,5 MM	
Common Parts					
010	1036343-0000		2	SCREW	
030	2547589-0000		1	SPRING	
040	2530296-0000		2	ROLLER	
050	2532531-0000		2	ROLLER	
060	2530293-0000		1	BRACKET	
090	2530292-0000		1	BRACKET	
100	2547588-0000		1	SPRING	
300	312105-0460		4	SCREW M6S ISO 4014 M8X45 A480	
320	312115-0327		4	SCREW ISO4762 M5X12 A4 80	
330	312105-0372		2	SCREW M6S ISO 4017 M6X25 A480	
340	312115-0447		2	SCREW ISO4762 M8X12 A4 80	
360	315105-0153		2	WASHER BRB 6,4X12 RFR	
370	315105-0165		4	WASHER BRB 8,4X16 RFR	
380	315211-0104		4	BONDED SEAL SS/NBR90 M8	
390	342980-0121		2	BANJO-CONNECTION,RING 8/6-G1/8	
400	342980-0303		2	BANJO-HOLLOW BOLT COUPL,EXT.THR.01-G1/8	
500	90030-0065		2	PIPE CONNECTION	

Machine Type | Group Description | Used-In | Group Number | Page No

CARRIER PRESSURE RIGHT

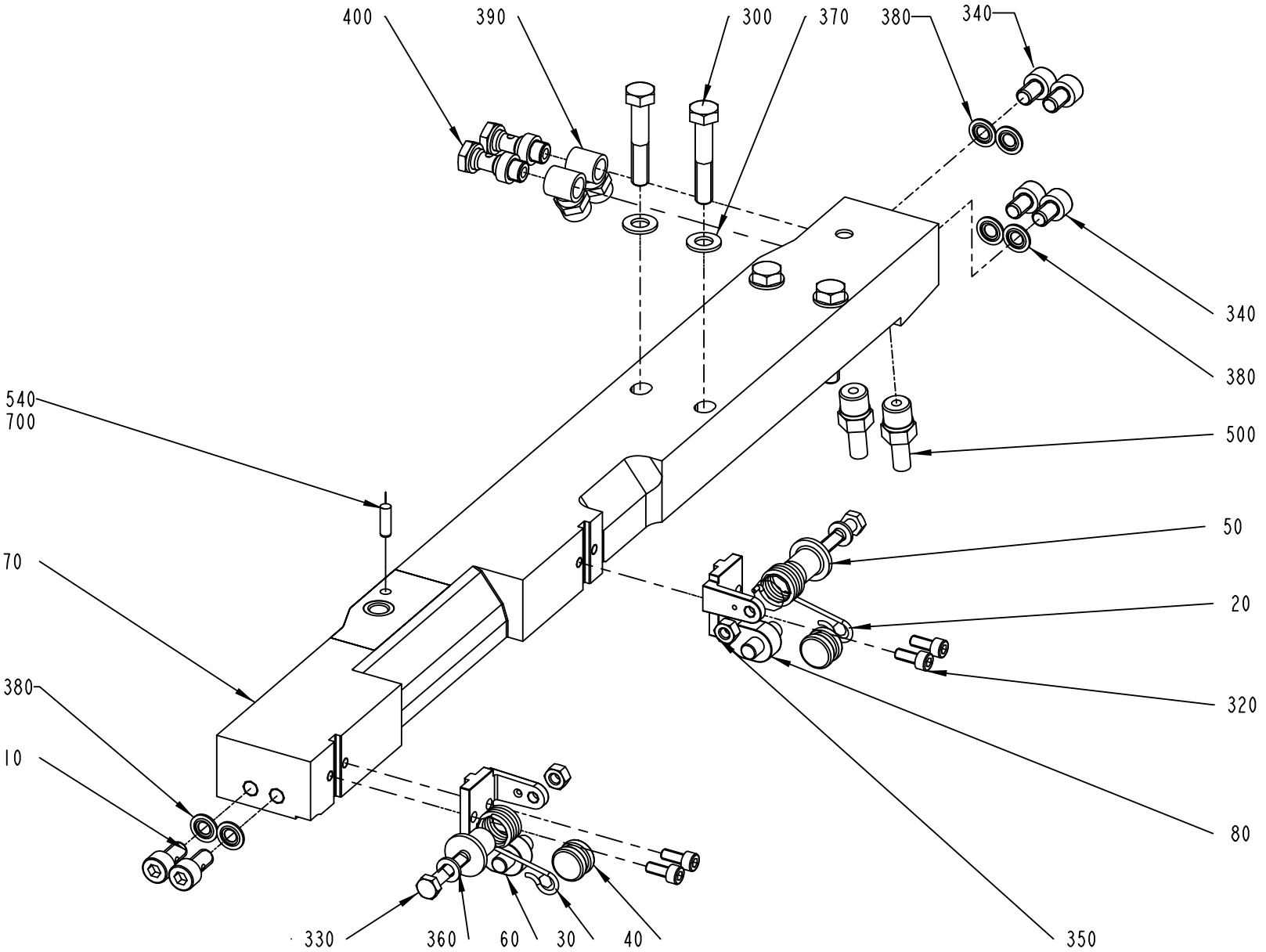

ECM: 998080 - 20081001
Group number: 2514050-0200
Assembly Drawing: 2514050-8_1_AB

This list covers pages from 4-174 to 4-181

Pos	Part No	UN	Qty	Description	Page No
A3/FLEX NOQC (See drawing on page: 4-176)					
070	2514051-0000		1	CARRIER	
310	312115-0285		2	SCREW ISO4762 M4X6 A4 80	
510	90165-0056		1	PIPE CLIP FOR TUBE D=4 MM	
520	90165-0058		1	PIPE CLIP FOR TUBE D=2,5 MM	
A3/FLEX TBA 0200M QC, A3/FLEX TBA 0250S QC (See drawing on page: 4-178)					
070	2514047-0000		1	CARRIER	
080	2641225-0000		1	INSERT	
410	312145-0323		3	SCREW ISO 2009 MFS M5X8 A4	
A3/FLEX TPA 0200SQ QC, A3/FLEX TPA 0250SQ QC, A3/FLEX TBA 0250SQ QC, A3/FLEX TBA 0200SQ QC, A3/FLEX TBA 0500B QC, A3/FLEX TBA 1000B QC, A3/FLEX TBA 0250B QC, A3/FLEX TBA 0200B QC, A3/FLEX TBA 0330S QC (See drawing on page: 4-178)					
070	2514047-0000		1	CARRIER	
080	1549312-0000		1	INSERT	
410	312145-0323		3	SCREW ISO 2009 MFS M5X8 A4	
A3/FLEX TBA 1890S QC, A3/FLEX TBA 2000S QC, A3/FLEX TBA 1400B (See drawing on page: 4-176)					
070	2566341-0000		1	CARRIER	
310	312115-0285		2	SCREW ISO4762 M4X6 A4 80	
510	90165-0056		1	PIPE CLIP FOR TUBE D=4 MM	
520	90165-0058		1	PIPE CLIP FOR TUBE D=2,5 MM	
A3/FLEX TGA 1000SQ, A3/FLEX TGA 0500SQ, A3/FLEX TGA 0750SQ (See drawing on page: 4-180)					
070	2594715-0000		1	CARRIER	
540	311103-0308		1	PARALLEL PIN ISO 2338 5M6X16 A1	
700	90153-0053		1	ADHESIVE, LOCTITE 648 TEMP 150`C 50ML	
A3/FLEX TPA 1000SQ QC, A3/FLEX TPA 0750SQ QC, A3/FLEX TBA 0500SQ QC, A3/FLEX TBA 1000SQ QC (See drawing on page: 4-174)					
070	2647117-0000		1	CARRIER	
080	2647114-0000		1	INSERT	
310	312115-0285		2	SCREW ISO4762 M4X6 A4 80	
410	312145-0323		3	SCREW ISO 2009 MFS M5X8 A4	
415	312105-0291		2	SCREW M6S ISO 4017 M4X12 A470	
510	90165-0056		1	PIPE CLIP FOR TUBE D=4 MM	
520	90165-0058		1	PIPE CLIP FOR TUBE D=2,5 MM	
Common Parts					
010	1036343-0000		2	SCREW	
030	2547589-0000		1	SPRING	
040	2530296-0000		2	ROLLER	
050	2532531-0000		2	ROLLER	
060	2530293-0000		1	BRACKET	
090	2530292-0000		1	BRACKET	
100	2547588-0000		1	SPRING	
300	312105-0460		4	SCREW M6S ISO 4014 M8X45 A480	
320	312115-0327		4	SCREW ISO4762 M5X12 A4 80	
330	312105-0372		2	SCREW M6S ISO 4017 M6X25 A480	
340	312115-0447		2	SCREW ISO4762 M8X12 A4 80	
360	315105-0153		2	WASHER BRB 6,4X12 RFR	
370	315105-0165		4	WASHER BRB 8,4X16 RFR	
380	315211-0104		4	BONDED SEAL SS/NBR90 M8	
390	342980-0121		2	BANJO-CONNECTION,RING 8/6-G1/8	
400	342980-0303		2	BANJO-HOLLOW BOLT COUPL,EXT.THR.01-G1/8	
500	90030-0065		2	PIPE CONNECTION	

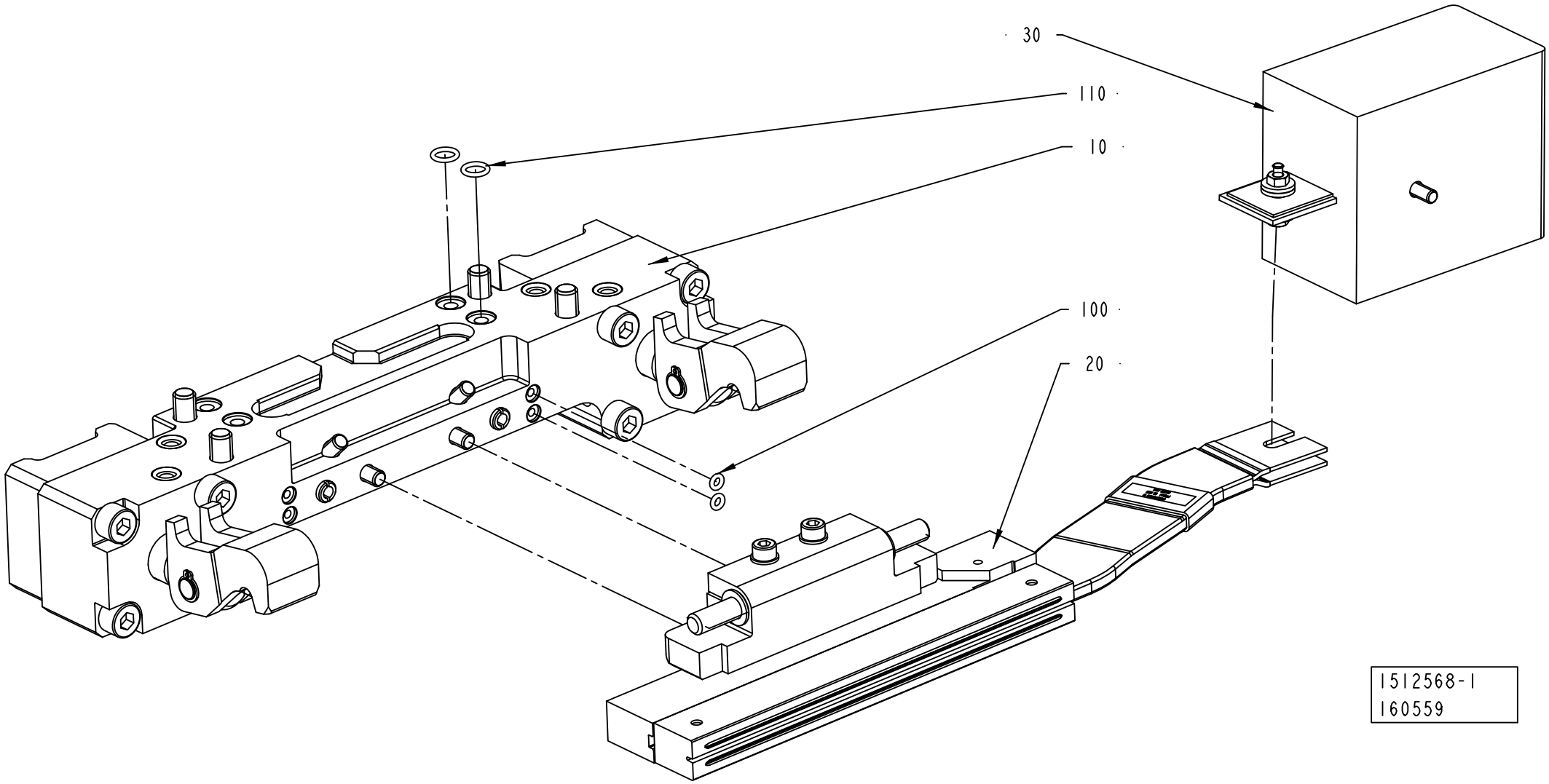
30
110
10
100
20
1512568-1
160559

Pos	Part No	UN	Qty	Description	Page No
TBA 1890S QC, TBA 2000S QC, TBA 1400B (See drawing on pages: 4-182, 4-184)					
120	311103-0267		1	PARALLEL PIN ISO 2338 4M6X10 A1	
Common Parts					
010	2552005-0100		1	PRESSURE JAW	**4-127**
020	2552007-0100		1	INDUCTOR RIGHT	**4-187, 4-189, 4-191, 4-193, 4-195, 4-197**
030	2546229-0100		1	ADAPTION TRANSFORMER	**4-141**
100	315202-0101		2	O-RING 3,1X1,6 MM	
110	315202-0105		2	O-RING 7,1X1,6 MM	

Pos	Part No	UN	Qty	Description	Page No

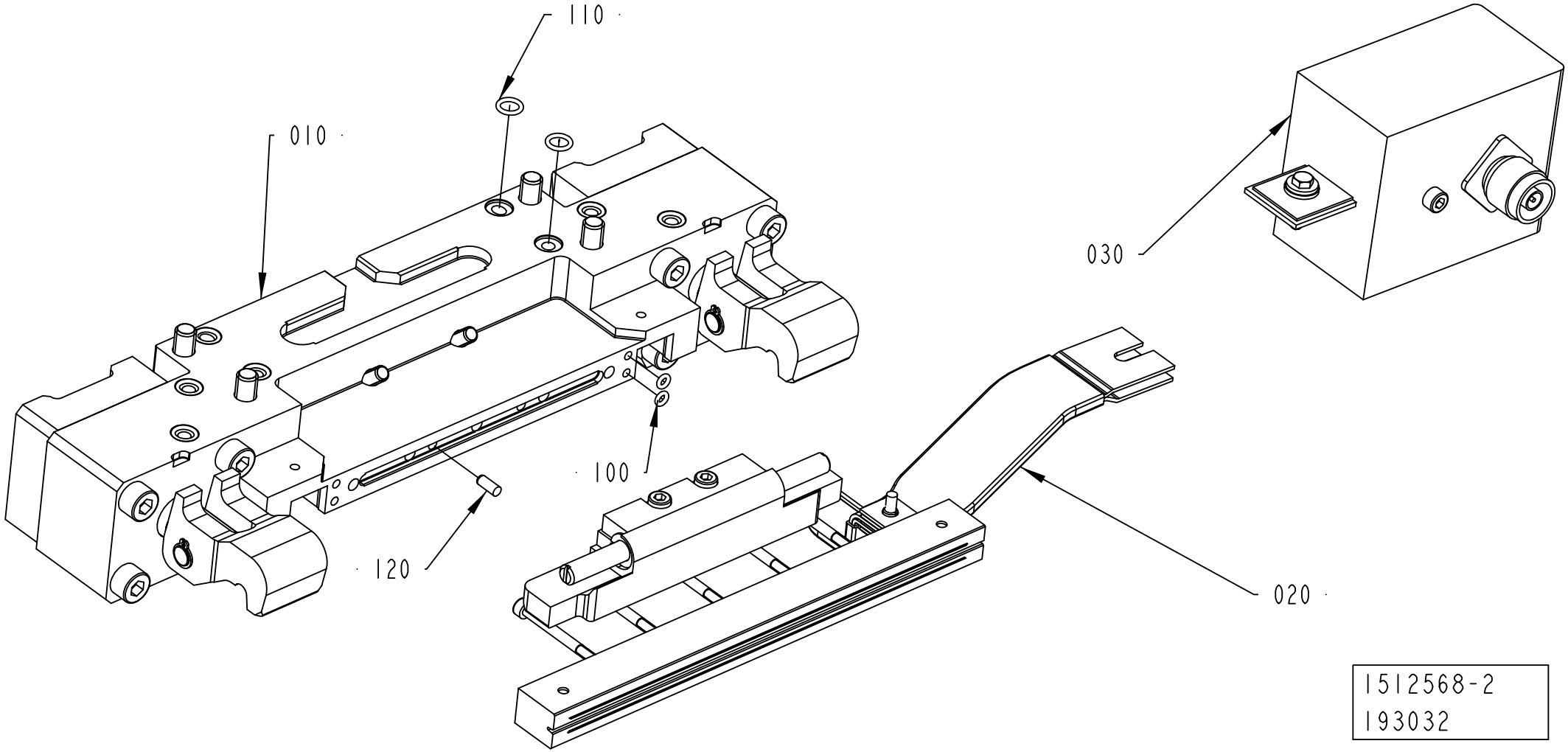
110
010
030
100
120
020
1512568-2
193032

Pos	Part No	UN	Qty	Description	Page No
TBA 1890S QC, TBA 2000S QC, TBA 1400B (See drawing on pages: 4-182, 4-184)					
120	311103-0267		1	PARALLEL PIN ISO 2338 4M6X10 A1	
Common Parts					
010	2552005-0100		1	PRESSURE JAW	**4-127**
020	2552007-0100		1	INDUCTOR RIGHT	**4-187, 4-189, 4-191, 4-193, 4-195, 4-197**
030	2546229-0100		1	ADAPTION TRANSFORMER	**4-141**
100	315202-0101		2	O-RING 3,1X1,6 MM	
110	315202-0105		2	O-RING 7,1X1,6 MM	

Pos	Part No	UN	Qty	Description	Page No

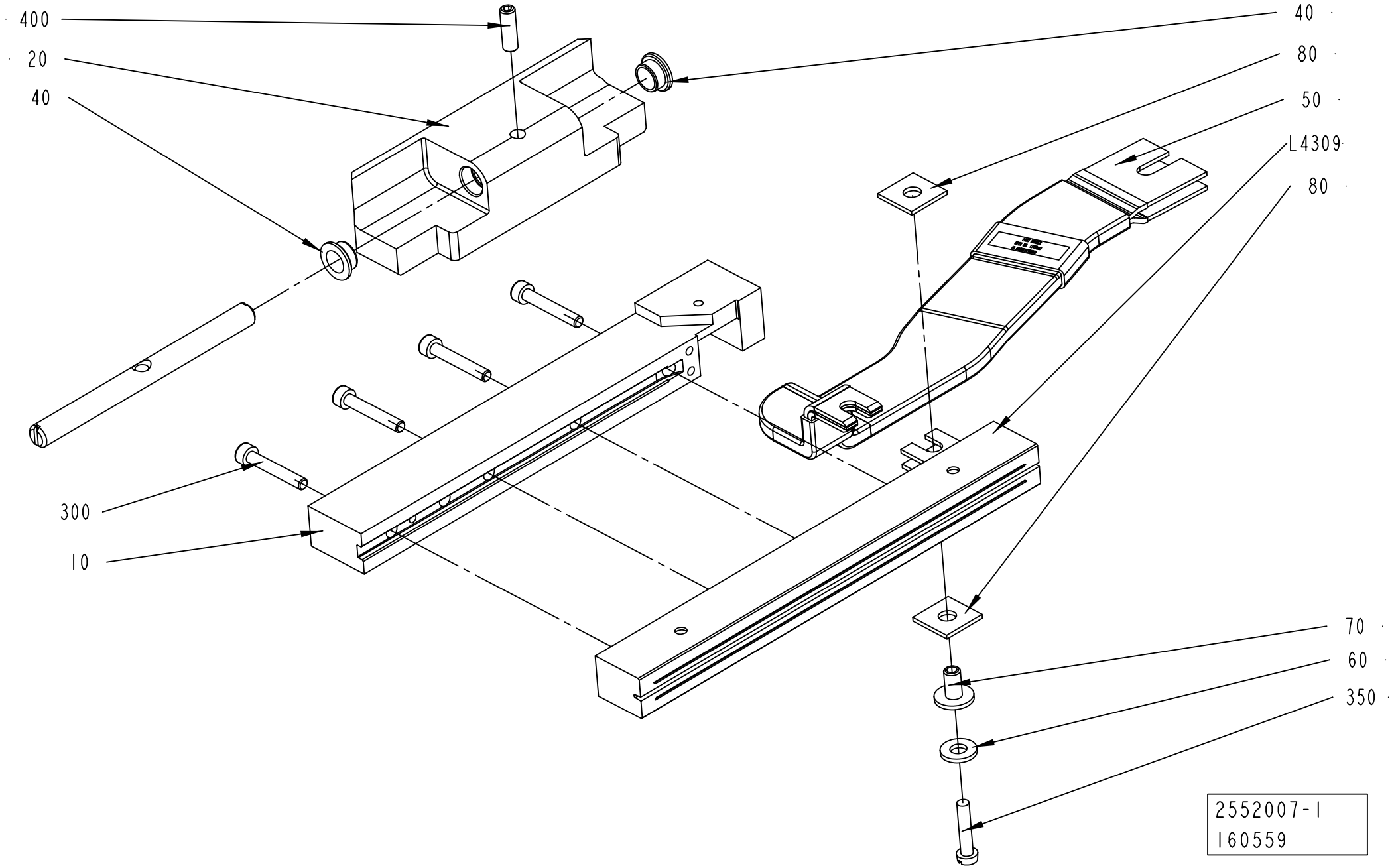
400
20
40
40
80
50
L4309
80
300
10
70
60
350
2552007-1
160559

ECM: 378266 - 20081127
Group number: 2552007-0100
Assembly Drawing: 2552007-1_1_AB

This list covers pages from 4-186 to 4-197

Pos	Part No	UN	Qty	Description	Page No
TBA 1500S (See drawing on page: 4-192)					
010	1348546-0000		1	RAIL	
020	2570302-0000		1	CLAMP HOLDER	
030	2526812-0000		1	SHAFT	
040	2531703-0000		2	BUSHING	
050	1498850-0000		1	BUSBAR	
300	312115-0297		4	SCREW ISO4762 M4X25 A4 80	
400	312115-0327		2	SCREW ISO4762 M5X12 A4 80	
L4309	1110938-0000		1	INDUCTOR	
TBA 1890S QC, TBA 2000S QC (See drawing on page: 4-192)					
020	2588293-0000		1	HOLDER	
030	2686144-0000		1	SHAFT	
040	2531703-0000		2	BUSHING	
050	2698012-0000		1	BUSBAR	
300	312115-0305		5	SCREW ISO4762 M4X50 A4 80	
400	312115-0327		2	SCREW ISO4762 M5X12 A4 80	
L4309	1533046-0000		1	INDUCTOR	
TGA 1000SQ, TGA 0750SQ, TGA 0500SQ (See drawing on page: 4-196)					
010	2649676-0000		1	RAIL	
050	1498850-0000		1	BUSBAR	
090	2698631-0000		1	VOLUME BULGE	
300	312115-0297		4	SCREW ISO4762 M4X25 A4 80	
370	312105-0370		1	SCREW M6S ISO 4017 M6X20 A480	
420	315105-0153		1	WASHER BRB 6,4X12 RFR	
L4309	1566783-0000		1	INDUCTOR	
TPA 0200SQ QC, TPA 0250SQ QC (See drawing on page: 4-190)					
010	1348546-0000		1	RAIL	
020	2674335-0000		1	HOLDER	
050	1498850-0000		1	BUSBAR	
300	312115-0297		3	SCREW ISO4762 M4X25 A4 80	
L4309	1110930-0000		1	INDUCTOR	
TPA 0330SQ (See drawing on page: 4-192)					
010	1348546-0000		1	RAIL	
020	2611655-0000		1	CLAMP HOLDER	
030	2513013-0000		1	SHAFT	
040	2531703-0000		2	BUSHING	
050	1498850-0000		1	BUSBAR	
300	312115-0297		3	SCREW ISO4762 M4X25 A4 80	
400	312115-0327		2	SCREW ISO4762 M5X12 A4 80	
L4309	1520167-0000		1	INDUCTOR	
TPA 0750SQ SMILE QC, TPA 1000SQ SMILE QC (See drawing on page: 4-194)					
010	1558820-0000		1	RAIL	
020	2660404-0000		1	HOLDER	
050	1498850-0000		1	BUSBAR	
090	2503700-0000		1	VOLUME BULGE	
100	2500591-0000		1	VOLUME BULGE	
300	312115-0297		4	SCREW ISO4762 M4X25 A4 80	
360	311103-0234		1	PARALLEL PIN ISO 2338 3M6X12 A1	
370	312155-0287		2	SCREW DIN 7991 MF6S M4X8 A4 70	
380	312155-0325		2	SCREW DIN 7991 MF6S M5X10 A4 70	
L4309	2663377-0000		1	INDUCTOR	
TPA 1000SQ FT NOQC (See drawing on page: 4-192)					
010	1558820-0000		1	RAIL	
020	2579989-0000		1	HOLDER	
030	2579990-0000		1	SHAFT	
040	2531703-0000		2	BUSHING	
050	1498850-0000		1	BUSBAR	
090	2503700-0000		1	VOLUME BULGE	
300	312115-0297		4	SCREW ISO4762 M4X25 A4 80	
370	312155-0287		2	SCREW DIN 7991 MF6S M4X8 A4 70	
400	312115-0327		2	SCREW ISO4762 M5X12 A4 80	
L4309	2663377-0000		1	INDUCTOR	
TPA 1000SQ SMILE NOQC (See drawing on page: 4-192)					
010	1558820-0000		1	RAIL	
020	2579991-0000		1	HOLDER	
030	2579990-0000		1	SHAFT	
040	2531703-0000		2	BUSHING	
050	1498850-0000		1	BUSBAR	
090	2503700-0000		1	VOLUME BULGE	
100	2500591-0000		1	VOLUME BULGE	
300	312115-0297		4	SCREW ISO4762 M4X25 A4 80	
370	312155-0287		2	SCREW DIN 7991 MF6S M4X8 A4 70	
380	312155-0325		2	SCREW DIN 7991 MF6S M5X10 A4 70	
400	312115-0327		2	SCREW ISO4762 M5X12 A4 80	
L4309	2663377-0000		1	INDUCTOR	
TPA 500SQ LIGHTCAP (See drawing on page: 4-194)					
010	2969720-0000		1	RAIL	
020	2570848-0000		1	HOLDER	
030	2513013-0000		1	SHAFT	
040	2570849-0000		1	BUSHING	
050	1498850-0000		1	BUSBAR	
090	2503688-0000		1	VOLUME BULGE	
100	2969721-0000		1	VOLUME BULGE	
300	312115-0297		4	SCREW ISO4762 M4X25 A4 80	

Machine Type | Group Description | Used-In | Group Number | Page No

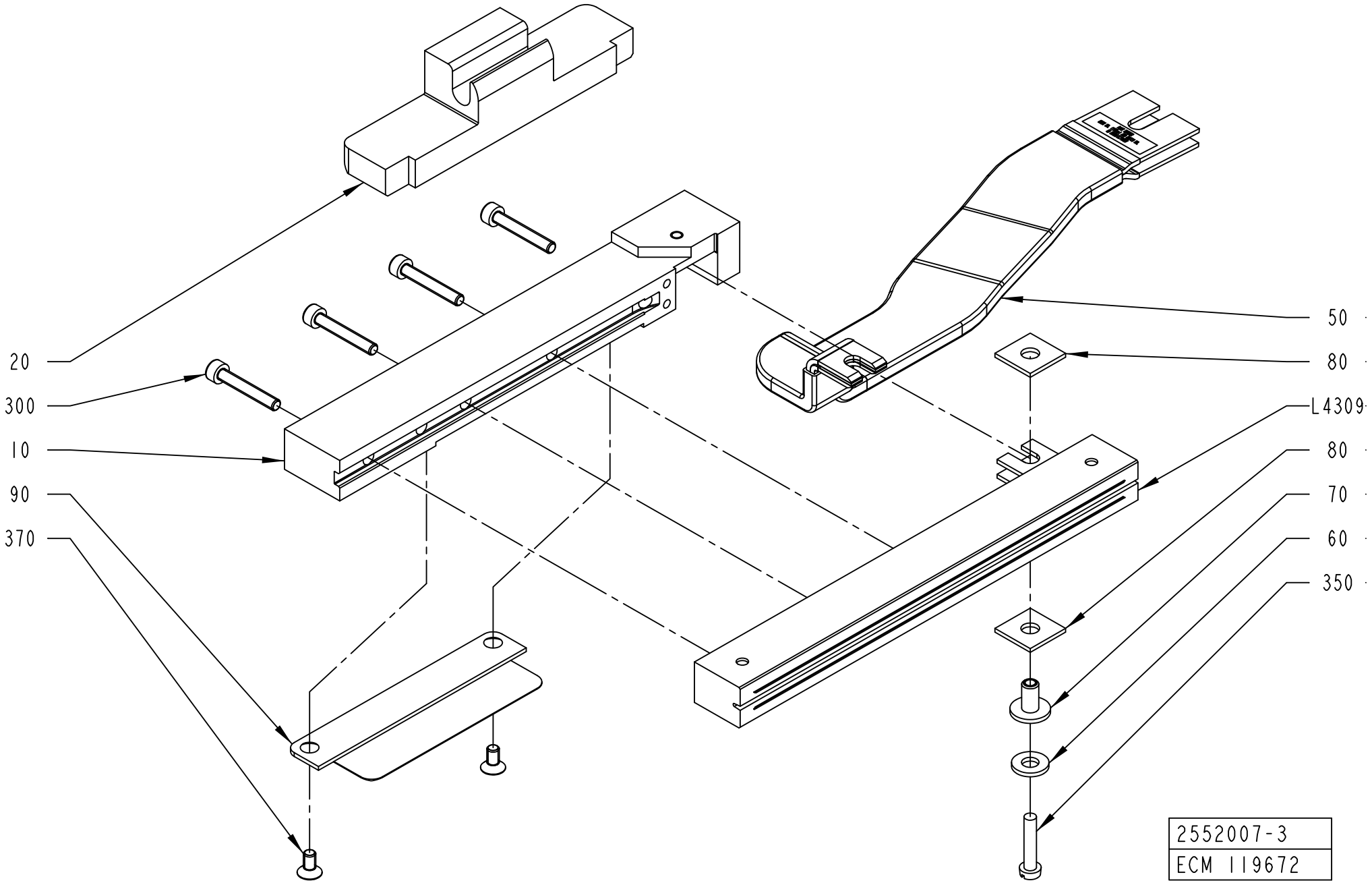
20
300
10
90
370
50
80
L4309
80
70
60
350
2552007-3
ECM 119672

ECM: 378266 - 20081127
Group number: 2552007-0100
Assembly Drawing: 2552007-3_1_AA

This list covers pages from 4-186 to 4-197

Pos	Part No	UN	Qty	Description	Page No
TPA 500SQ LIGHTCAP (Cont'd) (See drawing on page: 4-194)					
360	311103-0234		1	PARALLEL PIN ISO 2338 3M6X12 A1	
370	312155-0287		2	SCREW DIN 7991 MF6S M4X8 A4 70	
380	312155-0325		2	SCREW DIN 7991 MF6S M5X10 A4 70	
400	312115-0329		2	SCREW ISO4762 M5X16 A4 80	
L4309	2978583-0000		1	INDUCTOR	
TPA 500SQ NOMOLDEDCAP (See drawing on page: 4-194)					
010	1558820-0000		1	RAIL	
020	2570848-0000		1	HOLDER	
030	2513013-0000		1	SHAFT	
040	2570849-0000		1	BUSHING	
050	1498850-0000		1	BUSBAR	
090	2503688-0000		1	VOLUME BULGE	
100	1549834-0000		1	VOLUME BULGE	
300	312115-0297		4	SCREW ISO4762 M4X25 A4 80	
360	311103-0234		1	PARALLEL PIN ISO 2338 3M6X12 A1	
370	312155-0287		2	SCREW DIN 7991 MF6S M4X8 A4 70	
380	312155-0325		2	SCREW DIN 7991 MF6S M5X10 A4 70	
400	312115-0329		2	SCREW ISO4762 M5X16 A4 80	
L4309	2587467-0000		1	INDUCTOR	
TBA 0200B NOQC, TBA 0250B NOQC (See drawing on page: 4-186)					
010	1348546-0000		1	RAIL	
020	1349599-0000		1	HOLDER	
030	1349980-0000		1	SHAFT	
040	1349584-0000		2	BUSHING	
050	1498850-0000		1	BUSBAR	
300	312115-0297		3	SCREW ISO4762 M4X25 A4 80	
400	312318-0329		1	SCREW ISO4029 M5X16 A4	
L4309	1110932-0000		1	INDUCTOR	
TBA 0200B QC, TBA 0250B QC (See drawing on page: 4-188)					
010	1348546-0000		1	RAIL	
020	2604565-0000		1	HOLDER	
050	1498850-0000		1	BUSBAR	
300	312115-0297		3	SCREW ISO4762 M4X25 A4 80	
TBA 0200M QC, TBA 0250S QC (See drawing on page: 4-190)					
010	1348546-0000		1	RAIL	
020	2644397-0000		1	HOLDER	
050	1498850-0000		1	BUSBAR	
300	312115-0297		3	SCREW ISO4762 M4X25 A4 80	
L4309	1110931-0000		1	INDUCTOR	
TBA 0200S (See drawing on page: 4-192)					
010	1348546-0000		1	RAIL	
020	2513015-0000		1	HOLDER	
030	2513013-0000		1	SHAFT	
040	2531703-0000		2	BUSHING	
050	1498850-0000		1	BUSBAR	
300	312115-0297		3	SCREW ISO4762 M4X25 A4 80	
400	312115-0329		2	SCREW ISO4762 M5X16 A4 80	
L4309	1110930-0000		1	INDUCTOR	
TBA 0200SQ, TBA 0250SQ (See drawing on page: 4-188)					
010	1558820-0000		1	RAIL	
020	2668318-0000		1	HOLDER	
050	1498850-0000		1	BUSBAR	
090	2679953-0000		1	VOLUME BULGE	
300	312115-0297		3	SCREW ISO4762 M4X25 A4 80	
370	312155-0287		2	SCREW DIN 7991 MF6S M4X8 A4 70	
L4309	2767760-0000		1	INDUCTOR	
TBA 0330S QC (See drawing on page: 4-188)					
010	1348546-0000		1	RAIL	
020	2604565-0000		1	HOLDER	
050	1498850-0000		1	BUSBAR	
300	312115-0297		3	SCREW ISO4762 M4X25 A4 80	
L4309	1110932-0000		1	INDUCTOR	
TBA 0500B QC, TBA 1000B QC (See drawing on page: 4-188)					
010	1558820-0000		1	RAIL	
020	1487955-0000		1	HOLDER	
050	1498850-0000		1	BUSBAR	
090	1558734-0000		1	VOLUME BULGE	
300	312115-0297		4	SCREW ISO4762 M4X25 A4 80	
370	312155-0287		2	SCREW DIN 7991 MF6S M4X8 A4 70	
L4309	1110938-0000		1	INDUCTOR	
TBA 0500S (See drawing on page: 4-192)					
010	1348546-0000		1	RAIL	
020	2611001-0000		1	CLAMP HOLDER	
030	2579990-0000		1	SHAFT	
040	2531703-0000		2	BUSHING	
050	1498850-0000		1	BUSBAR	
300	312115-0297		4	SCREW ISO4762 M4X25 A4 80	
400	312115-0327		2	SCREW ISO4762 M5X12 A4 80	
L4309	1110934-0000		1	INDUCTOR	
TBA 0500SQ QC, TBA 1000SQ QC (See drawing on page: 4-188)					
010	1348546-0000		1	RAIL	
020	2812891-0000		1	HOLDER	
050	1498850-0000		1	BUSBAR	

Machine Type | Group Description | Used-In | Group Number | Page No

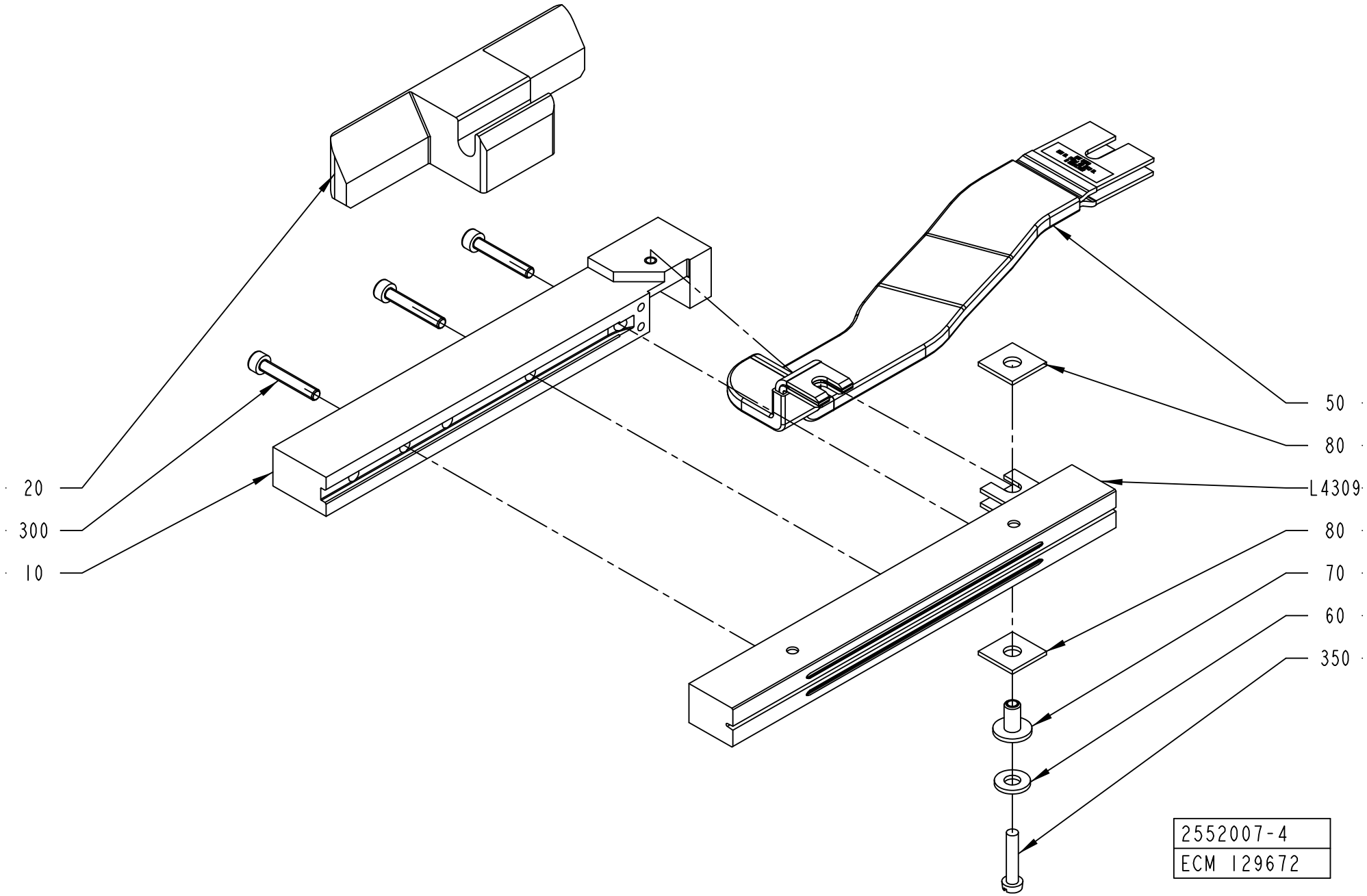
20
300
10
50
80
L4309
80
70
60
350
2552007-4
ECM 129672

ECM: 378266 - 20081127
Group number: 2552007-0100
Assembly Drawing: 2552007-4_1_AA

This list covers pages from 4-186 to 4-197

Pos	Part No	UN	Qty	Description	Page No
TBA 0500SQ QC, TBA 1000SQ QC (Cont'd) (See drawing on page: 4-188)					
300	312115-0297		4	SCREW ISO4762 M4X25 A4 80	
L4309	1110936-0000		1	INDUCTOR	
TBA 1000B NOQC NOMOLDEDCAP (See drawing on page: 4-192)					
010	1348546-0000		1	RAIL	
020	2664280-0000		1	HOLDER	
030	2526812-0000		1	SHAFT	
040	2531703-0000		2	BUSHING	
050	1498850-0000		1	BUSBAR	
300	312115-0297		4	SCREW ISO4762 M4X25 A4 80	
400	312115-0329		2	SCREW ISO4762 M5X16 A4 80	
410	315105-0146		2	WASHER BRB 5,3X10 RFR	
L4309	1110938-0000		1	INDUCTOR	
TBA 1000B NOQC STDA7 (See drawing on page: 4-192)					
010	2610955-0000		1	RAIL	
020	2664280-0000		1	HOLDER	
030	2526812-0000		1	SHAFT	
040	2531703-0000		2	BUSHING	
050	1498850-0000		1	BUSBAR	
300	312115-0297		4	SCREW ISO4762 M4X25 A4 80	
400	312115-0329		2	SCREW ISO4762 M5X16 A4 80	
410	315105-0146		2	WASHER BRB 5,3X10 RFR	
L4309	2610956-0000		1	INDUCTOR	
TBA 1000S LIGHTCAP (See drawing on page: 4-192)					
010	2766752-0000		1	RAIL	
020	2559425-0000		1	CLAMP HOLDER	
030	2526812-0000		1	SHAFT	
040	2531703-0000		2	BUSHING	
050	1498850-0000		1	BUSBAR	
300	312115-0297		4	SCREW ISO4762 M4X25 A4 80	
400	312115-0327		2	SCREW ISO4762 M5X12 A4 80	
L4309	1566843-0000		1	INDUCTOR	
TBA 1000S NOMOLDEDCAP (See drawing on page: 4-192)					
010	1348546-0000		1	RAIL	
020	2559425-0000		1	CLAMP HOLDER	
030	2526812-0000		1	SHAFT	
040	2531703-0000		2	BUSHING	
050	1498850-0000		1	BUSBAR	
300	312115-0297		4	SCREW ISO4762 M4X25 A4 80	
400	312115-0327		2	SCREW ISO4762 M5X12 A4 80	
L4309	1110937-0000		1	INDUCTOR	
TBA 1000S STDA7 (See drawing on page: 4-192)					
010	2546476-0000		1	RAIL	
020	2559425-0000		1	CLAMP HOLDER	
030	2526812-0000		1	SHAFT	
040	2531703-0000		2	BUSHING	
050	1498850-0000		1	BUSBAR	
300	312115-0297		4	SCREW ISO4762 M4X25 A4 80	
400	312115-0327		2	SCREW ISO4762 M5X12 A4 80	
L4309	2546474-0000		1	INDUCTOR	
TBA 1000SQ NOQC (See drawing on page: 4-192)					
010	1348546-0000		1	RAIL	
020	2526811-0000		1	HOLDER	
030	2526812-0000		1	SHAFT	
040	2531703-0000		2	BUSHING	
050	1498850-0000		1	BUSBAR	
300	312115-0297		4	SCREW ISO4762 M4X25 A4 80	
400	312115-0327		2	SCREW ISO4762 M5X12 A4 80	
L4309	1110936-0000		1	INDUCTOR	
TBA 1400B (See drawing on page: 4-192)					
020	2588293-0000		1	HOLDER	
030	2686144-0000		1	SHAFT	
040	2531703-0000		2	BUSHING	
050	2698012-0000		1	BUSBAR	
300	312115-0305		5	SCREW ISO4762 M4X50 A4 80	
400	312115-0327		2	SCREW ISO4762 M5X12 A4 80	
L4309	2841895-0000		1	INDUCTOR	
	1533046-0000		*1*	*INDUCTOR*	
Common Parts					
060	28509-0000		1	WASHER	
070	32544-0000		1	INSULATION NUT	
080	1036584-0000		2	WASHER	
350	312125-0295		1	SCREW ISO 1207 M4X20 A4	

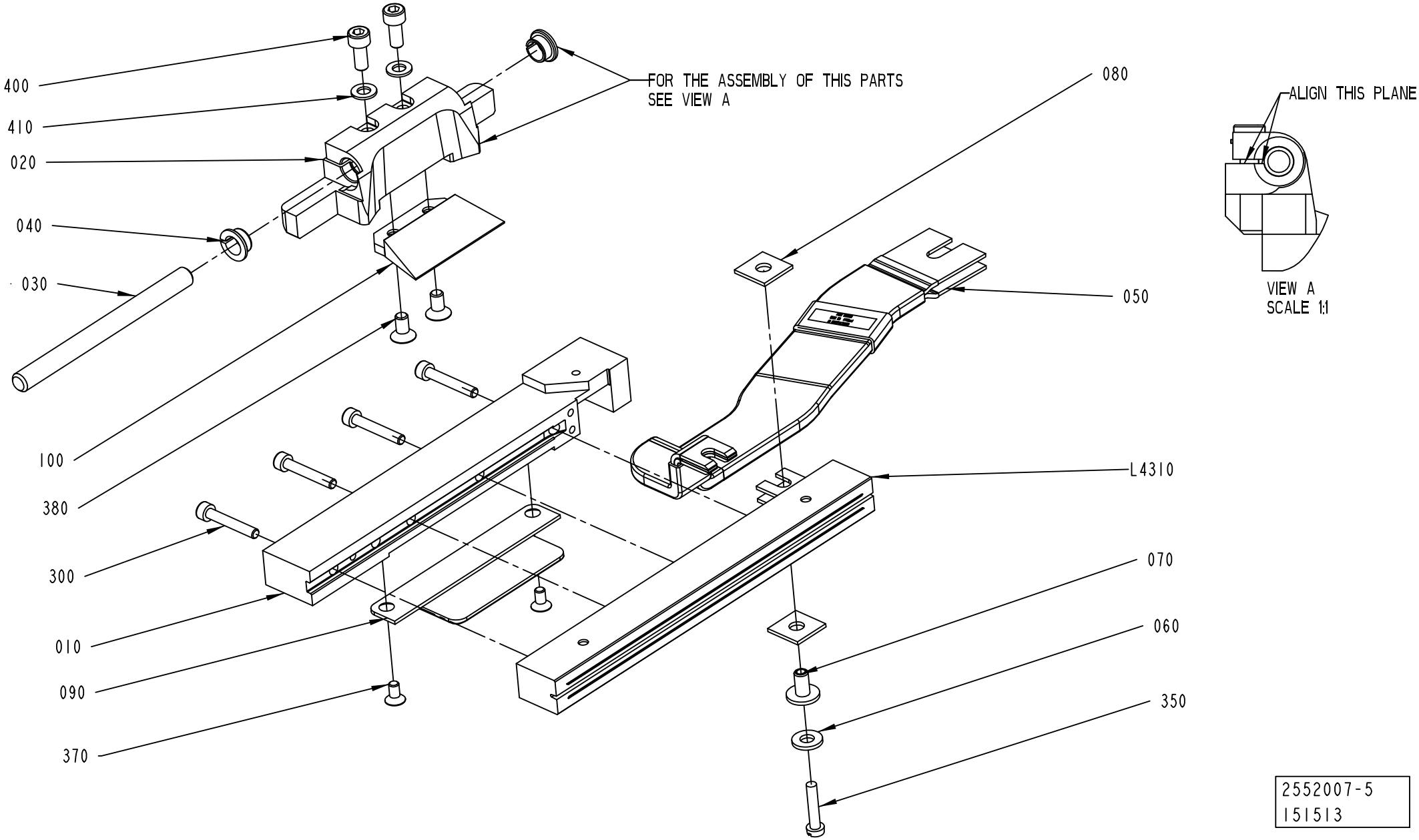
400
410
020
040
030
100
380
300
010
090
370
FOR THE ASSEMBLY OF THIS PARTS
SEE VIEW A
080
050
L4310
070
060
350
ALIGN THIS PLANE
VIEW A
SCALE 1:1
2552007-5
151513

ECM: 378266 - 20081127
Group number: 2552007-0100
Assembly Drawing: 2552007-5_1_AC

This list covers pages from 4-186 to 4-197

Pos	Part No	UN	Qty	Description	Page No
SEE PREVIOUS LISTS PAGES: 4-187, 4-189, 4-191.					

Pos	Part No	UN	Qty	Description	Page No

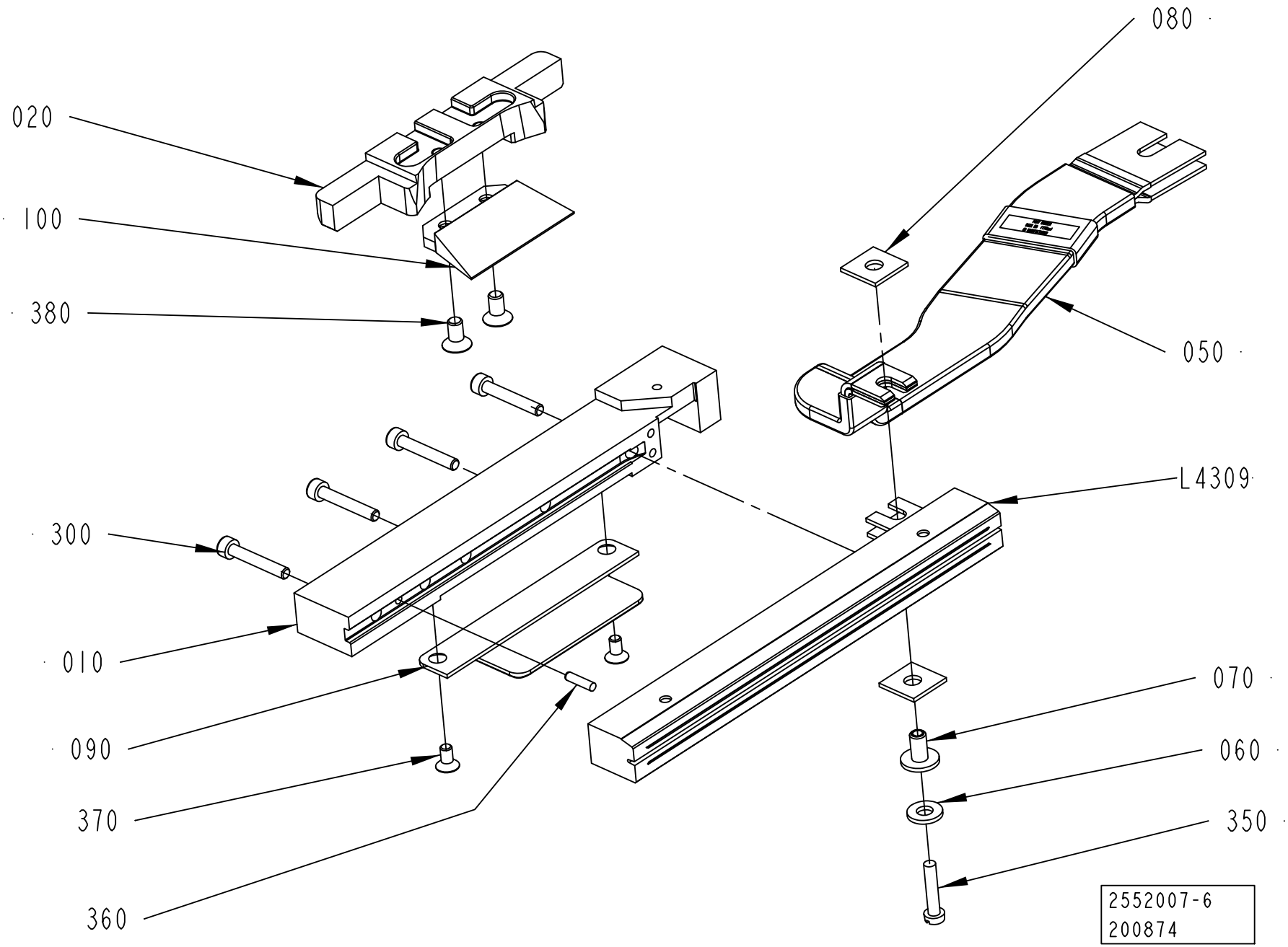
080
020
100
380
050
L4309
300
010
090
370
360
070
060
350
2552007-6
200874

ECM: 378266 - 20081127
Group number: 2552007-0100
Assembly Drawing: 2552007-6_1_AA

This list covers pages from 4-186 to 4-197

Pos	Part No	UN	Qty	Description	Page No
SEE PREVIOUS LISTS PAGES: 4-187, 4-189, 4-191.					

Pos	Part No	UN	Qty	Description	Page No

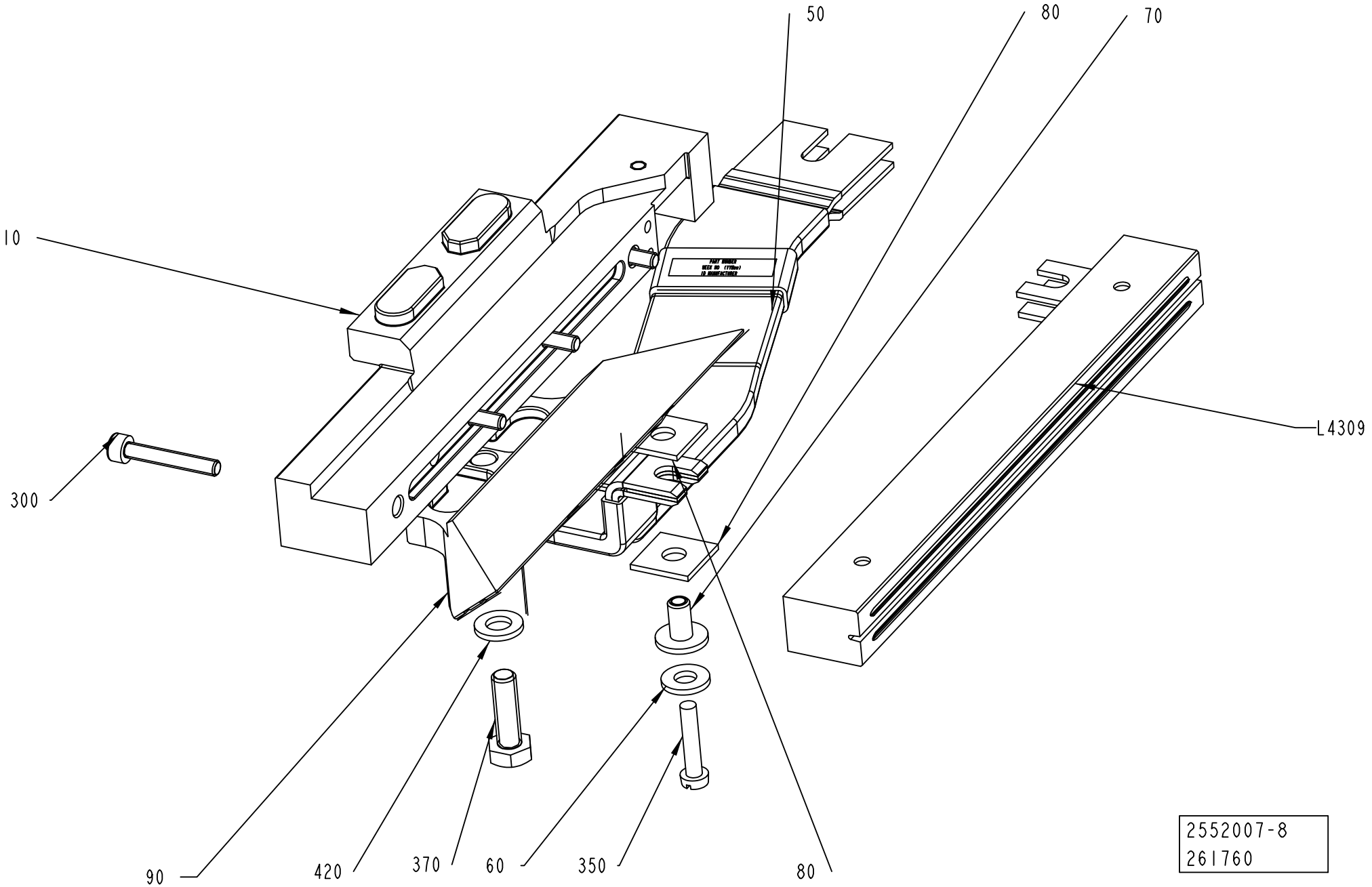
50
80
70
10
L4309
300
90
420
370
60
350
80
2552007-8
261760

Pos	Part No	UN	Qty	Description	Page No
SEE PREVIOUS LISTS PAGES: 4-187, 4-189, 4-191.					

Pos	Part No	UN	Qty	Description	Page No

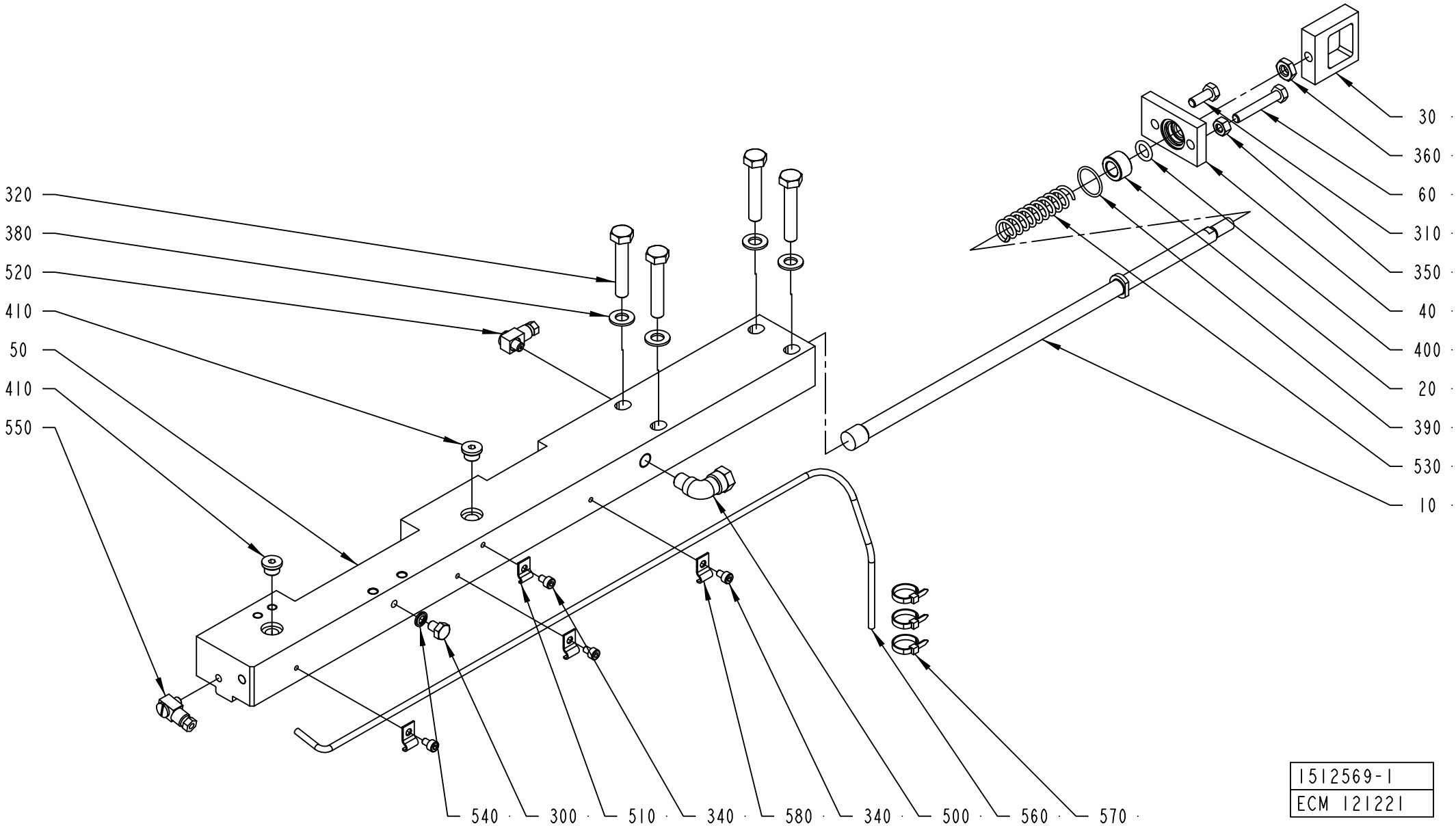
320
380
520
410
50
410
550
30
360
60
310
350
40
400
20
390
530
10
540
300
510
340
580
340
500
560
570
1512569-1
ECM 121221

ECM: 387837 - 20090403
Group number: 1512569-0200
Assembly Drawing: 1512569-1_1_AA

This list covers pages from 4-198 to 4-207

Pos	Part No	UN	Qty	Description	Page No
TBA 0200B QC, TBA 0330S QC, TBA 0250B QC, TPA 0200SQ QC, TPA 0250SQ QC (See drawing on page: 4-200)					
010	2530508-0000		1	TIE ROD	
050	2572248-0000		1	CARRIER	
070	1549312-0000		1	INSERT	
300	312105-0362		1	SCREW M6S ISO 4017 M6X8 A480	
340	312115-0285		4	SCREW ISO4762 M4X6 A4 80	
345	312145-0323		3	SCREW ISO 2009 MFS M5X8 A4	
400	315202-0208		1	O-RING 9,3X2,4 MM	
510	90165-0058		1	PIPE CLIP FOR TUBE D=2,5 MM	
520	90134-0058		1	CONNECTION	
540	315211-0103		1	BONDED SEAL SS/NBR90 M6	
550	90134-0068		1	CONNECTION	
560	90166-0109	MM	800	TUBE 4 MM PA TRANSP.	
580	90165-0056		3	PIPE CLIP FOR TUBE D=4 MM	
TBA 0200M QC, TBA 0250S QC (See drawing on page: 4-200)					
010	2530508-0000		1	TIE ROD	
050	2572248-0000		1	CARRIER	
070	2641225-0000		1	INSERT	
300	312105-0362		1	SCREW M6S ISO 4017 M6X8 A480	
340	312115-0285		4	SCREW ISO4762 M4X6 A4 80	
345	312145-0323		3	SCREW ISO 2009 MFS M5X8 A4	
400	315202-0208		1	O-RING 9,3X2,4 MM	
510	90165-0058		1	PIPE CLIP FOR TUBE D=2,5 MM	
520	90134-0058		1	CONNECTION	
540	315211-0103		1	BONDED SEAL SS/NBR90 M6	
550	90134-0068		1	CONNECTION	
560	90166-0109	MM	800	TUBE 4 MM PA TRANSP.	
580	90165-0056		3	PIPE CLIP FOR TUBE D=4 MM	
TBA 0200S, TBA 0500S, TPA 0330SQ, TPA 0500SQ, TBA 0200B NOQC, TBA 0250B NOQC (See drawing on page: 4-198)					
010	2530508-0000		1	TIE ROD	
050	2536026-0000		1	CARRIER	
300	312105-0362		1	SCREW M6S ISO 4017 M6X8 A480	
340	312115-0285		4	SCREW ISO4762 M4X6 A4 80	
400	315202-0208		1	O-RING 9,3X2,4 MM	
510	90165-0058		1	PIPE CLIP FOR TUBE D=2,5 MM	
520	90134-0058		1	CONNECTION	
540	315211-0103		1	BONDED SEAL SS/NBR90 M6	
550	90134-0068		1	CONNECTION	
560	90166-0109	MM	800	TUBE 4 MM PA TRANSP.	
580	90165-0056		3	PIPE CLIP FOR TUBE D=4 MM	
TBA 0200SQ QC, TBA 0250SQ QC (See drawing on page: 4-200)					
010	2737034-0000		1	TIE ROD	
050	2572248-0000		1	CARRIER	
070	1549312-0000		1	INSERT	
300	312105-0362		1	SCREW M6S ISO 4017 M6X8 A480	
340	312115-0285		4	SCREW ISO4762 M4X6 A4 80	
345	312145-0323		3	SCREW ISO 2009 MFS M5X8 A4	
400	315202-0208		1	O-RING 9,3X2,4 MM	
510	90165-0058		1	PIPE CLIP FOR TUBE D=2,5 MM	
520	90134-0058		1	CONNECTION	
540	315211-0103		1	BONDED SEAL SS/NBR90 M6	
550	90134-0068		1	CONNECTION	
560	90166-0109	MM	800	TUBE 4 MM PA TRANSP.	
580	90165-0056		3	PIPE CLIP FOR TUBE D=4 MM	
TBA 0500B QC, TBA 1000B QC (See drawing on page: 4-200)					
010	1499320-0000		1	TIE ROD	
050	2572248-0000		1	CARRIER	
070	1549312-0000		1	INSERT	
300	312105-0362		1	SCREW M6S ISO 4017 M6X8 A480	
340	312115-0285		4	SCREW ISO4762 M4X6 A4 80	
345	312145-0323		3	SCREW ISO 2009 MFS M5X8 A4	
400	315202-0208		1	O-RING 9,3X2,4 MM	
510	90165-0058		1	PIPE CLIP FOR TUBE D=2,5 MM	
520	90134-0058		1	CONNECTION	
540	315211-0103		1	BONDED SEAL SS/NBR90 M6	
550	90134-0068		1	CONNECTION	
560	90166-0109	MM	800	TUBE 4 MM PA TRANSP.	
580	90165-0056		3	PIPE CLIP FOR TUBE D=4 MM	
TBA 0500SQ QC, TBA 1000SQ QC (See drawing on page: 4-202)					
010	1499320-0000		1	TIE ROD	
050	2647118-0000		1	CARRIER	
070	2647114-0000		1	INSERT	
290	312105-0291		2	SCREW M6S ISO 4017 M4X12 A470	
300	312105-0362		1	SCREW M6S ISO 4017 M6X8 A480	
340	312115-0285		4	SCREW ISO4762 M4X6 A4 80	
345	312145-0323		3	SCREW ISO 2009 MFS M5X8 A4	
400	315202-0208		1	O-RING 9,3X2,4 MM	
510	90165-0058		1	PIPE CLIP FOR TUBE D=2,5 MM	
520	90134-0058		1	CONNECTION	
540	315211-0103		1	BONDED SEAL SS/NBR90 M6	
550	90134-0068		1	CONNECTION	
560	90166-0109	MM	800	TUBE 4 MM PA TRANSP.	

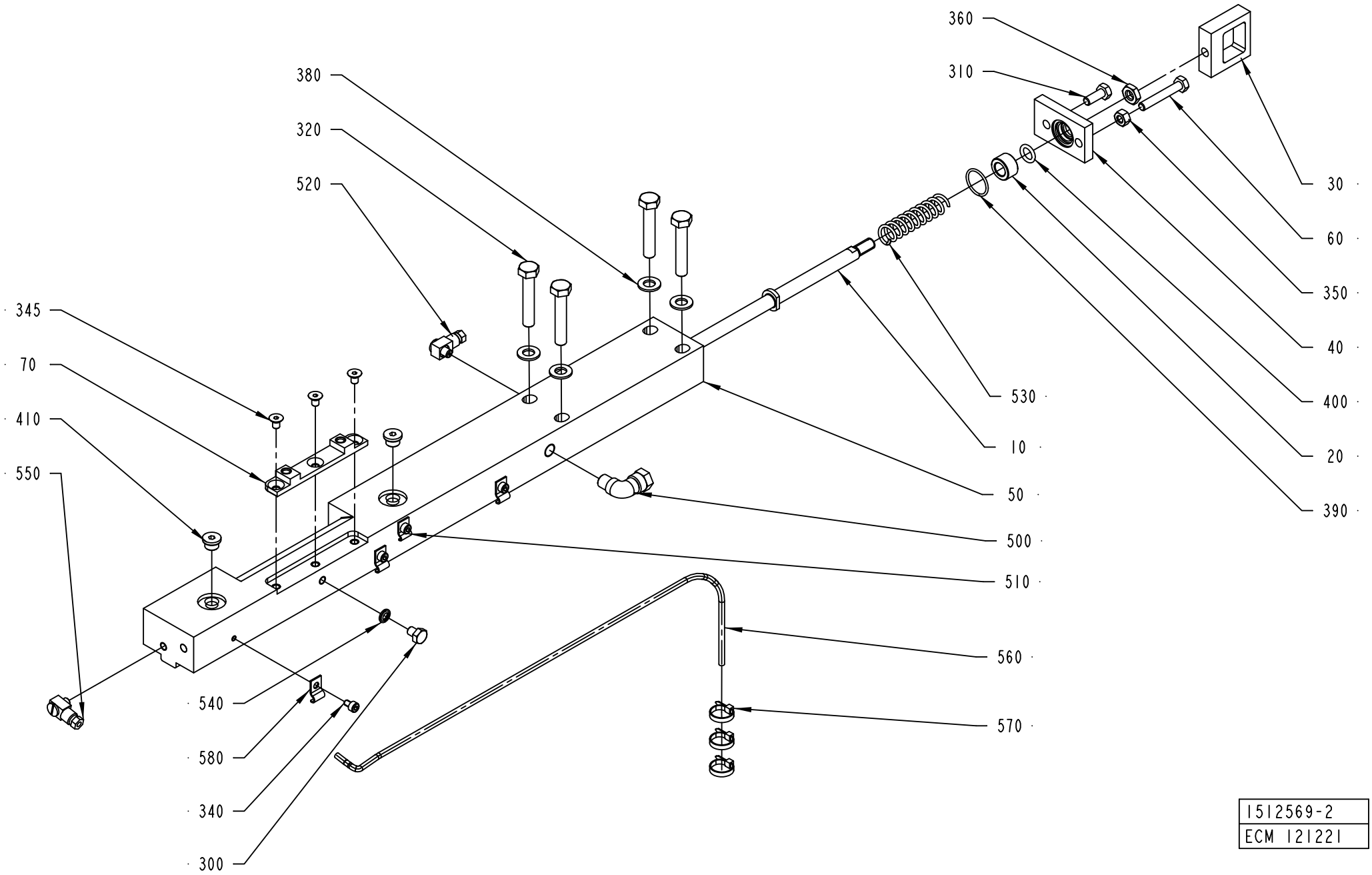

1512569-2
ECM 121221

ECM: 387837 - 20090403
Group number: 1512569-0200
Assembly Drawing: 1512569-2_1_AA

This list covers pages from 4-198 to 4-207

Pos	Part No	UN	Qty	Description	Page No
TBA 0500SQ QC, TBA 1000SQ QC (Cont'd) (See drawing on page: 4-202)					
580	90165-0056		3	PIPE CLIP FOR TUBE D=4 MM	
TBA 1000SQ, TBA 1000S, TBA 1500S, TBA 1000B NOQC, TPA 1000SQ NOQC (See drawing on page: 4-198)					
010	1499320-0000		1	TIE ROD	
050	2536026-0000		1	CARRIER	
300	312105-0362		1	SCREW M6S ISO 4017 M6X8 A480	
340	312115-0285		4	SCREW ISO4762 M4X6 A4 80	
400	315202-0208		1	O-RING 9,3X2,4 MM	
510	90165-0058		1	PIPE CLIP FOR TUBE D=2,5 MM	
520	90134-0058		1	CONNECTION	
540	315211-0103		1	BONDED SEAL SS/NBR90 M6	
550	90134-0068		1	CONNECTION	
560	90166-0109	MM	800	TUBE 4 MM PA TRANSP.	
580	90165-0056		3	PIPE CLIP FOR TUBE D=4 MM	
TBA 1890S QC, TBA 2000S QC, TBA 1400B (See drawing on page: 4-204)					
010	2588291-0000		1	TIE ROD	
050	2566327-0000		1	CARRIER	
070	2566328-0000		1	PLATE	
300	312105-0362		1	SCREW M6S ISO 4017 M6X8 A480	
340	312115-0285		4	SCREW ISO4762 M4X6 A4 80	
400	315202-0208		1	O-RING 9,3X2,4 MM	
510	90165-0058		1	PIPE CLIP FOR TUBE D=2,5 MM	
520	90134-0058		1	CONNECTION	
540	315211-0103		1	BONDED SEAL SS/NBR90 M6	
550	90134-0068		1	CONNECTION	
560	90166-0109	MM	800	TUBE 4 MM PA TRANSP.	
580	90165-0056		3	PIPE CLIP FOR TUBE D=4 MM	
590	312155-0287		3	SCREW DIN 7991 MF6S M4X8 A4 70	
600	2603151-0000		1	SHIM	
TGA 1000SQ, TGA 0750SQ, TGA 0500SQ (See drawing on page: 4-206)					
010	2588291-0000		1	TIE ROD	
040	2612747-0000		1	COVER	
050	2594717-0000		1	CARRIER	
300	312105-0362		3	SCREW M6S ISO 4017 M6X8 A480	
400	90459-3388		1	SCRAPER, 10X16X4,7 MM	
420	311103-0308		1	PARALLEL PIN ISO 2338 5M6X16 A1	
540	315211-0103		3	BONDED SEAL SS/NBR90 M6	
700	90153-0053		1	ADHESIVE, LOCTITE 648 TEMP 150`C 50ML	
TPA 1000SQ QC, TPA 0750SQ QC (See drawing on page: 4-202)					
010	2530508-0000		1	TIE ROD	
050	2647118-0000		1	CARRIER	
070	2647114-0000		1	INSERT	
290	312105-0291		2	SCREW M6S ISO 4017 M4X12 A470	
300	312105-0362		1	SCREW M6S ISO 4017 M6X8 A480	
340	312115-0285		4	SCREW ISO4762 M4X6 A4 80	
345	312145-0323		3	SCREW ISO 2009 MFS M5X8 A4	
400	315202-0208		1	O-RING 9,3X2,4 MM	
510	90165-0058		1	PIPE CLIP FOR TUBE D=2,5 MM	
520	90134-0058		1	CONNECTION	
540	315211-0103		1	BONDED SEAL SS/NBR90 M6	
550	90134-0068		1	CONNECTION	
560	90166-0109	MM	800	TUBE 4 MM PA TRANSP.	
580	90165-0056		3	PIPE CLIP FOR TUBE D=4 MM	
Common Parts					
020	1036495-0000		1	BUSHING	
030	1036585-0000		1	EAR	
040	1036389-0000		1	LID	
060	1523162-0000		1	SCREW	
310	312105-0368		1	SCREW M6S ISO 4017 M6X16 A480	
320	312105-0460		4	SCREW M6S ISO 4014 M8X45 A480	
350	312605-0316		1	HEXAGON NUT, M6M M6 A280	
360	312625-0318		1	HEXAGON THIN NUT, EN 24035 ML6M M8 A4	
380	315105-0165		4	WASHER BRB 8,4X16 RFR	
390	315202-0116		1	O-RING 18,1X1,6 MM	
410	342713-0209		2	PLUG (QUANT.MINIMA= 10PC).	
500	90030-0257		1	CONN. ELBOW, 8-R1/8, EXT.THREAD	
530	1548940-0000		1	SPRING	
570	352113-0101		3	CABLE TIE, BLACK 92X2,5 MM	

Machine Type | Group Description | Used-In | Group Number | Page No

CARRIER CUTTING RIGHT

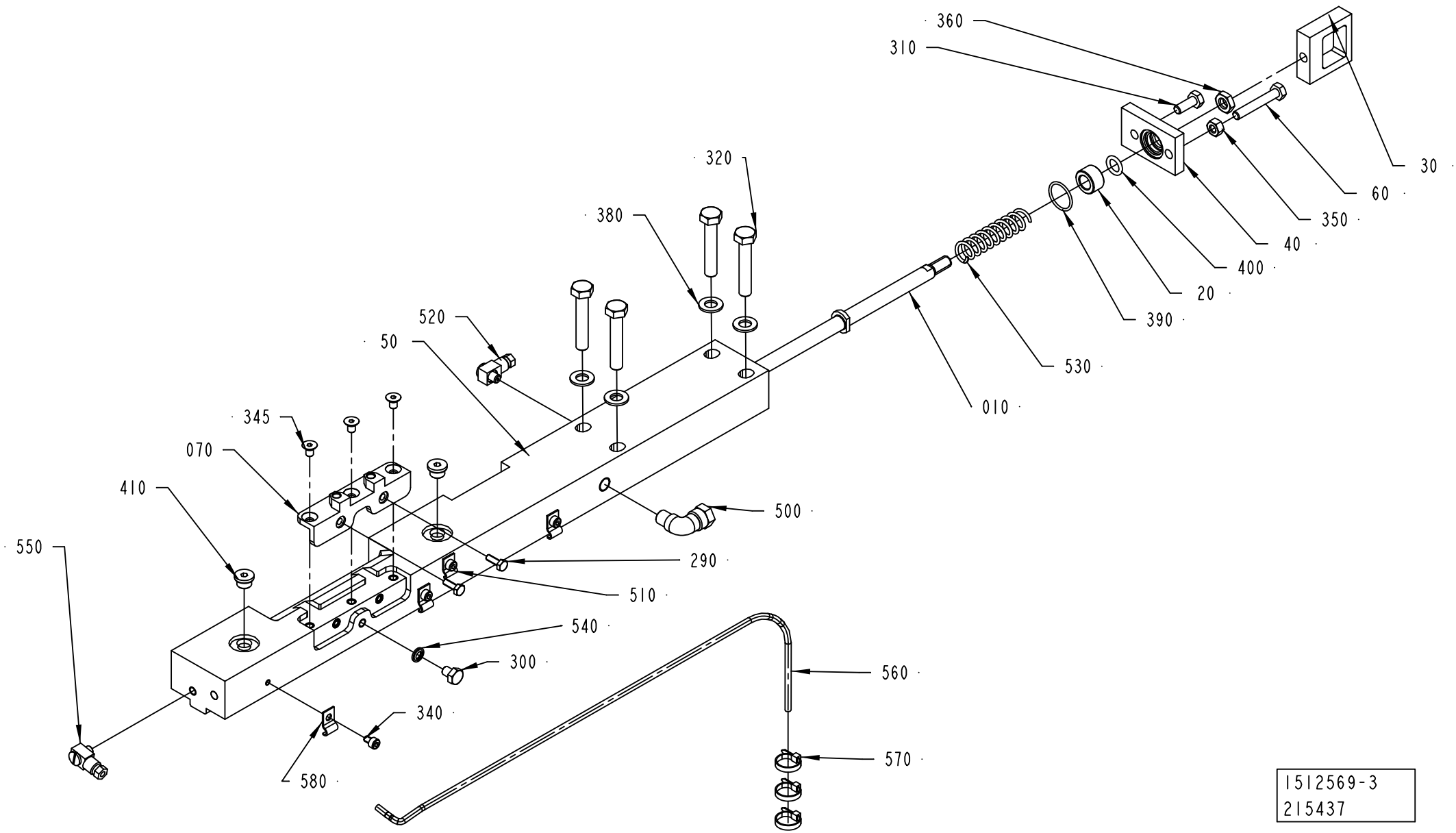

1512569-3
215437

ECM: 387837 - 20090403
Group number: 1512569-0200
Assembly Drawing: 1512569-3_1_AB

This list covers pages from 4-198 to 4-207

Pos	Part No	UN	Qty	Description	Page No
SEE PREVIOUS LISTS PAGES: 4-199, 4-201.					

Pos	Part No	UN	Qty	Description	Page No

CARRIER CUTTING RIGHT

Drawing file: 1512569-4_1_AA.hpgl

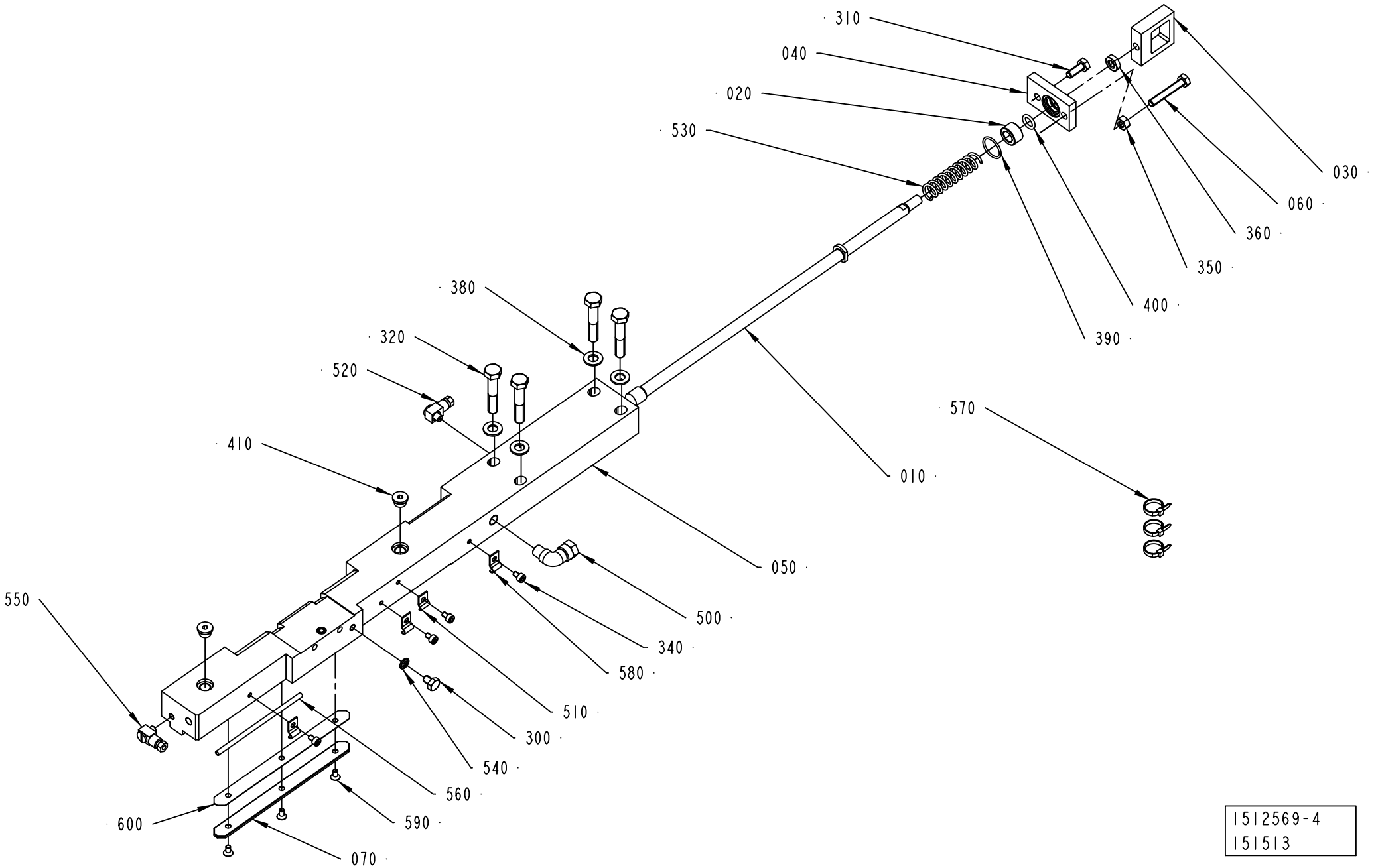

1512569-4
151513

Pos	Part No	UN	Qty	Description	Page No
SEE PREVIOUS LISTS PAGES: 4-199, 4-201.					

Pos	Part No	UN	Qty	Description	Page No

CARRIER CUTTING RIGHT

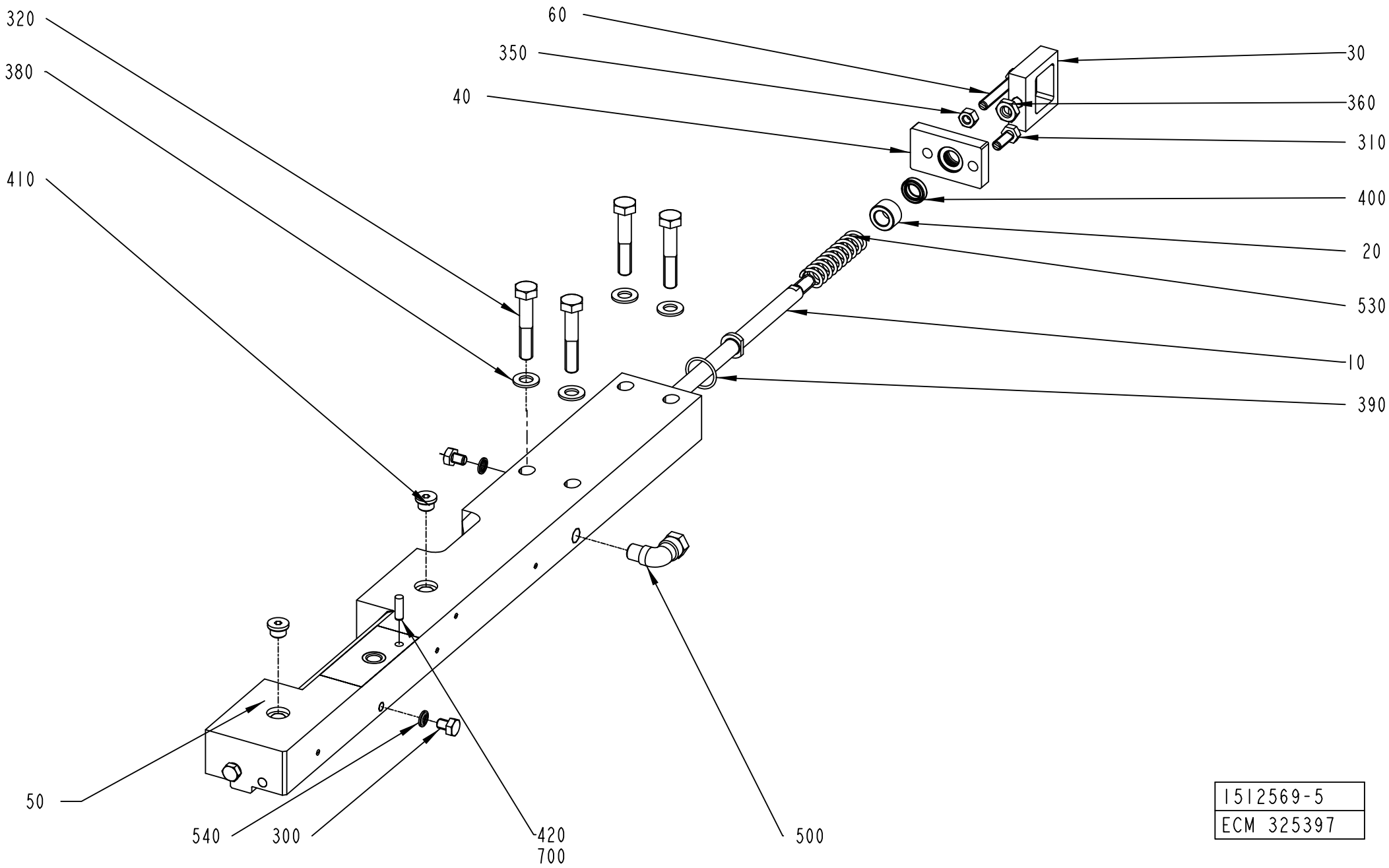

1512569-5
ECM 325397

ECM: 387837 - 20090403
Group number: 1512569-0200
Assembly Drawing: 1512569-5_1_AB

This list covers pages from 4-198 to 4-207

Pos	Part No	UN	Qty	Description	Page No
SEE PREVIOUS LISTS PAGES: 4-199, 4-201.					

Pos	Part No	UN	Qty	Description	Page No

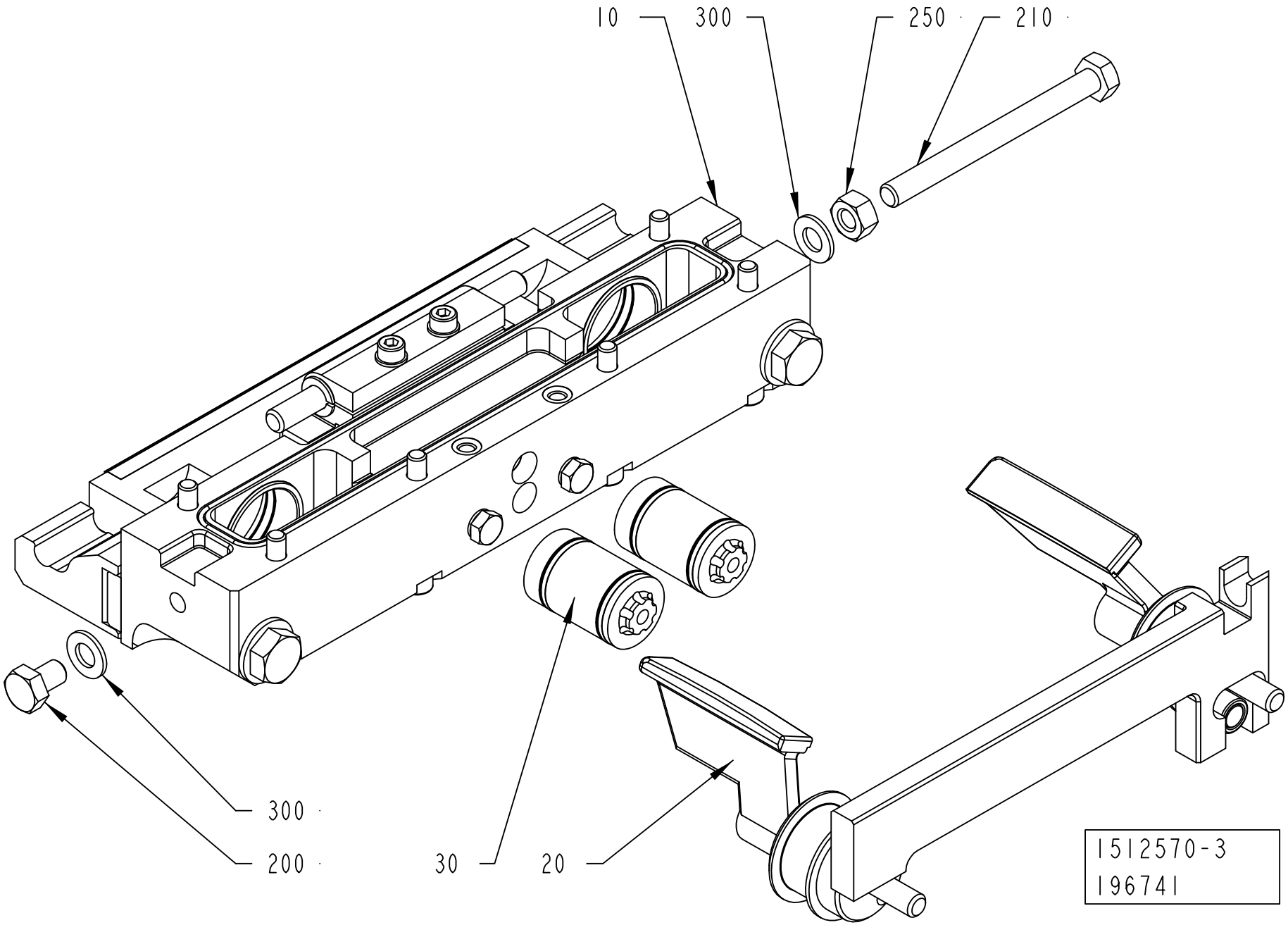
10
300
250
210
300
200
30
20
1512570-3
196741

ECM: 235785 - 20060101
Group number: 1512570-0300
Assembly Drawing: 1512570-3_1_AA

Pos	Part No	UN	Qty	Description	Page No
-					
010	2552008-0200		1	CUTTING JAW	**4-155, 4-157, 4-159, 4-161, 4-163**
020	2552011-0100		1	FOLDING FLAP RIGHT	**4-211, 4-213, 4-215, 4-217**
030	2552010-0200		2	PISTON	**4-173**
200	312105-0447		1	SCREW M6S ISO 4017 M8X12 A480	
210	312105-0469		1	SCREW M6S ISO 4014 M8X90 A480	
250	312605-0318		1	HEXAGON NUT, M6M M8 A280	
300	315105-0165		2	WASHER BRB 8,4X16 RFR	

Pos	Part No	UN	Qty	Description	Page No

FOLDING FLAP RIGHT

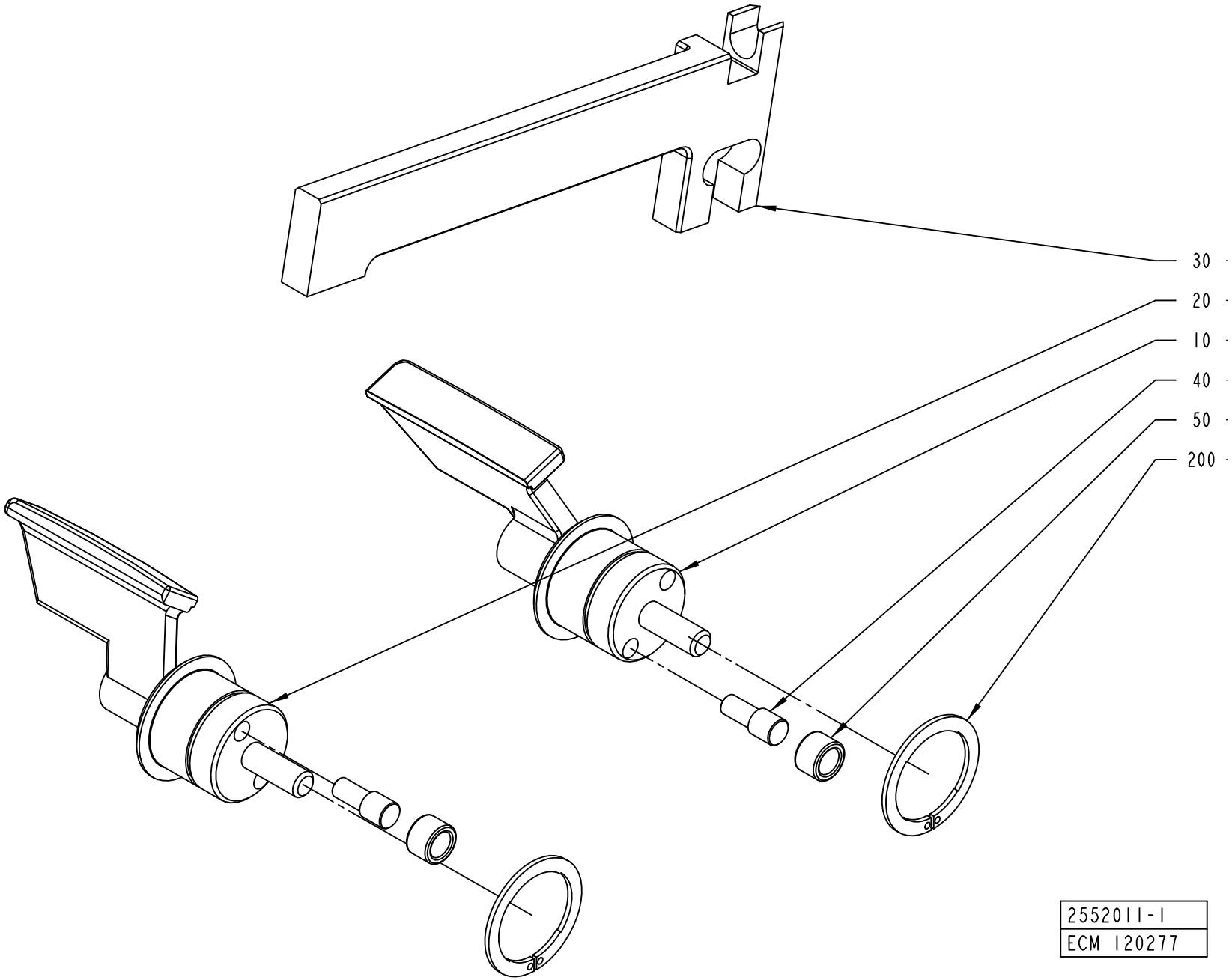

ECM: 360775 - 20081001
Group number: 2552011-0100
Assembly Drawing: 2552011-1_1_AA

This list covers pages from 4-210 to 4-217

Pos	Part No	UN	Qty	Description	Page No
TPA 0500SQ (See drawing on page: 4-210)					
010	1549822-0000		1	FOLDING FLAP	
020	1549823-0000		1	FOLDING FLAP	
030	1549825-0000		1	CARRIER RULER	
TPA 1000SQ NOQC, TPA 1000SQ QC, TPA 0750SQ QC (See drawing on page: 4-210)					
010	1523146-0000		1	FOLDING FLAP	
020	1523147-0000		1	FOLDING FLAP	
030	1523148-0000		1	CARRIER RULER	
TBA 0200B QC, TBA 0330S QC, TBA 0250B QC (See drawing on page: 4-210)					
010	2605875-0000		1	FOLDING FLAP	
020	2605876-0000		1	FOLDING FLAP	
030	1255463-0000		1	CARRIER RULER	
TBA 0200M QC, TBA 0250S QC					
010	2624554-0000		1	FOLDING FLAP	
020	2624555-0000		1	FOLDING FLAP	
030	2520471-0000		1	CARRIER RULER	
TBA 0200S (See drawing on page: 4-210)					
010	2624554-0000		1	FOLDING FLAP	
020	2624555-0000		1	FOLDING FLAP	
030	1255462-0000		1	CARRIER RULER	
TBA 0200SQ QC, TBA 0250SQ QC (See drawing on page: 4-210)					
010	2668313-0000		1	FOLDING FLAP	
020	2668314-0000		1	FOLDING FLAP	
030	2736139-0000		1	CARRIER RULER	
TBA 0500B NOQC, TBA 1000B NOQC NOMOLDEDCAP (See drawing on page: 4-210)					
010	1511697-0000		1	FOLDING FLAP	
020	1511698-0000		1	FOLDING FLAP	
030	1255461-0000		1	CARRIER RULER	
TBA 0500B QC, TBA 1000B QC (See drawing on page: 4-210)					
010	1511352-0000		1	FOLDING FLAP	
020	1511351-0000		1	FOLDING FLAP	
030	1255461-0000		1	CARRIER RULER	
TBA 0500S (See drawing on page: 4-210)					
010	2507085-0000		1	FOLDING FLAP	
020	2507086-0000		1	FOLDING FLAP	
030	1511188-0000		1	CARRIER RULER	
TBA 0500SQ QC, TBA 1000SQ QC (See drawing on page: 4-216)					
010	2843850-0000		1	FOLDING FLAP	
020	2843851-0000		1	FOLDING FLAP	
030	1360319-0000		1	CARRIER RULER	
070	2843780-0000		2	PLATE	
260	312105-0323		4	SCREW M6S ISO 4017 M5X8 A480	
TBA 1000B NOQC STDA7 (See drawing on page: 4-210)					
010	1511697-0000		1	FOLDING FLAP	
020	1511698-0000		1	FOLDING FLAP	
030	1255461-0000		1	CARRIER RULER	
TBA 1000S NOMOLDEDCAP, TBA 1000S STDA7, TBA 1000S LIGHTCAP (See drawing on page: 4-210)					
010	1511699-0000		1	FOLDING FLAP	
020	1511700-0000		1	FOLDING FLAP	
030	1255464-0000		1	CARRIER RULER	
TBA 1000SQ NOQC (See drawing on page: 4-210)					
010	2507076-0000		1	FOLDING FLAP	
020	2507077-0000		1	FOLDING FLAP	
030	1360319-0000		1	CARRIER RULER	
TBA 1500S (See drawing on page: 4-210)					
010	2507092-0000		1	FOLDING FLAP	
020	2507093-0000		1	FOLDING FLAP	
030	1255461-0000		1	CARRIER RULER	
TBA 1890S QC, TBA 2000S QC, TBA 1400B (See drawing on page: 4-212)					
010	2566319-0000		1	FOLDING FLAP	
020	2566320-0000		1	FOLDING FLAP	
030	2566317-0000		1	CARRIER RULER	
210	90459-2258		2	SEAL GLYDRING 25,1X30X2,2 MM	
TGA 1000SQ, TGA 0750SQ, TGA 0500SQ (See drawing on page: 4-214)					
010	2660290-0000		1	FOLDING FLAP	
020	2660291-0000		1	FOLDING FLAP	
030	2660285-0000		1	CARRIER RULER	
060	2660294-0000		1	PLATE	
210	90459-2258		2	SEAL GLYDRING 25,1X30X2,2 MM	
250	312145-0287		2	SCREW ISO 2009 MFS M4X8 A4	
TPA 0200SQ QC, TPA 0250SQ QC					
010	2728883-0000		1	OLDING FLAP	
020	2728884-0000		1	OLDING FLAP	
030	1255462-0000		1	CARRIER RULER	
TPA 0330SQ (See drawing on page: 4-210)					
010	2507096-0000		1	FOLDING FLAP	
020	2507097-0000		1	FOLDING FLAP	
030	1538769-0000		1	CARRIER RULER	
Common Parts					
040	22462-0000		2	SHAFT	
050	22463-0000		2	ROLL	
200	90141-0029		2	CIRCLIP	

Machine Type | Group Description | Used-In | Group Number | Page No

FOLDING FLAP RIGHT

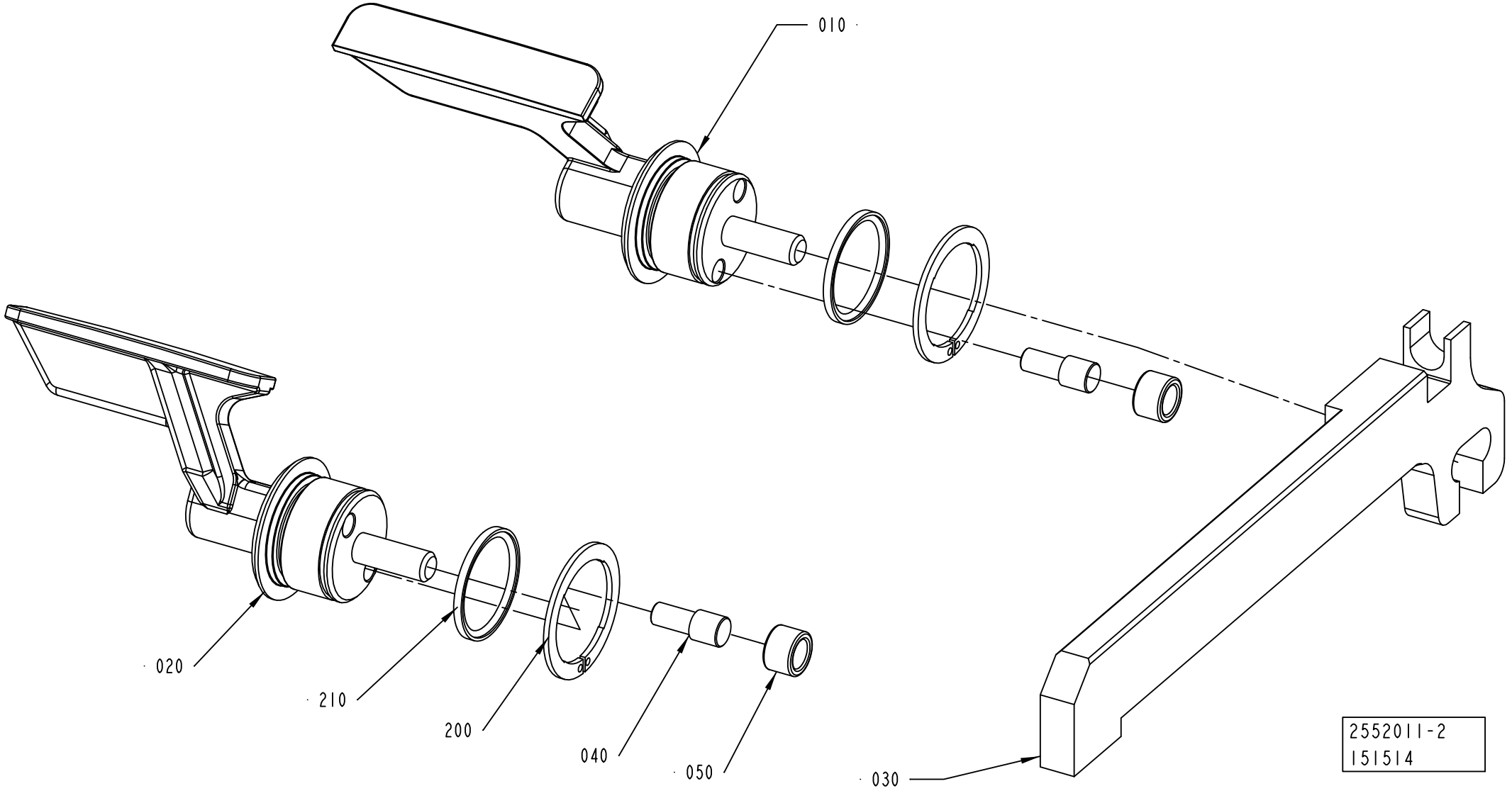

ECM: 360775 - 20081001
Group number: 2552011-0100
Assembly Drawing: 2552011-2_1_AA

This list covers pages from 4-210 to 4-217

Pos	Part No	UN	Qty	Description	Page No
TPA 0500SQ (See drawing on page: 4-210)					
010	1549822-0000		1	FOLDING FLAP	
020	1549823-0000		1	FOLDING FLAP	
030	1549825-0000		1	CARRIER RULER	
TPA 1000SQ NOQC, TPA 1000SQ QC, TPA 0750SQ QC (See drawing on page: 4-210)					
010	1523146-0000		1	FOLDING FLAP	
020	1523147-0000		1	FOLDING FLAP	
030	1523148-0000		1	CARRIER RULER	
TBA 0200B QC, TBA 0330S QC, TBA 0250B QC (See drawing on page: 4-210)					
010	2605875-0000		1	FOLDING FLAP	
020	2605876-0000		1	FOLDING FLAP	
030	1255463-0000		1	CARRIER RULER	
TBA 0200M QC, TBA 0250S QC					
010	2624554-0000		1	FOLDING FLAP	
020	2624555-0000		1	FOLDING FLAP	
030	2520471-0000		1	CARRIER RULER	
TBA 0200S (See drawing on page: 4-210)					
010	2624554-0000		1	FOLDING FLAP	
020	2624555-0000		1	FOLDING FLAP	
030	1255462-0000		1	CARRIER RULER	
TBA 0200SQ QC, TBA 0250SQ QC (See drawing on page: 4-210)					
010	2668313-0000		1	FOLDING FLAP	
020	2668314-0000		1	FOLDING FLAP	
030	2736139-0000		1	CARRIER RULER	
TBA 0500B NOQC, TBA 1000B NOQC NOMOLDEDCAP (See drawing on page: 4-210)					
010	1511697-0000		1	FOLDING FLAP	
020	1511698-0000		1	FOLDING FLAP	
030	1255461-0000		1	CARRIER RULER	
TBA 0500B QC, TBA 1000B QC (See drawing on page: 4-210)					
010	1511352-0000		1	FOLDING FLAP	
020	1511351-0000		1	FOLDING FLAP	
030	1255461-0000		1	CARRIER RULER	
TBA 0500S (See drawing on page: 4-210)					
010	2507085-0000		1	FOLDING FLAP	
020	2507086-0000		1	FOLDING FLAP	
030	1511188-0000		1	CARRIER RULER	
TBA 0500SQ QC, TBA 1000SQ QC (See drawing on page: 4-216)					
010	2843850-0000		1	FOLDING FLAP	
020	2843851-0000		1	FOLDING FLAP	
030	1360319-0000		1	CARRIER RULER	
070	2843780-0000		2	PLATE	
260	312105-0323		4	SCREW M6S ISO 4017 M5X8 A480	
TBA 1000B NOQC STDA7 (See drawing on page: 4-210)					
010	1511697-0000		1	FOLDING FLAP	
020	1511698-0000		1	FOLDING FLAP	
030	1255461-0000		1	CARRIER RULER	
TBA 1000S NOMOLDEDCAP, TBA 1000S STDA7, TBA 1000S LIGHTCAP (See drawing on page: 4-210)					
010	1511699-0000		1	FOLDING FLAP	
020	1511700-0000		1	FOLDING FLAP	
030	1255464-0000		1	CARRIER RULER	
TBA 1000SQ NOQC (See drawing on page: 4-210)					
010	2507076-0000		1	FOLDING FLAP	
020	2507077-0000		1	FOLDING FLAP	
030	1360319-0000		1	CARRIER RULER	
TBA 1500S (See drawing on page: 4-210)					
010	2507092-0000		1	FOLDING FLAP	
020	2507093-0000		1	FOLDING FLAP	
030	1255461-0000		1	CARRIER RULER	
TBA 1890S QC, TBA 2000S QC, TBA 1400B (See drawing on page: 4-212)					
010	2566319-0000		1	FOLDING FLAP	
020	2566320-0000		1	FOLDING FLAP	
030	2566317-0000		1	CARRIER RULER	
210	90459-2258		2	SEAL GLYDRING 25,1X30X2,2 MM	
TGA 1000SQ, TGA 0750SQ, TGA 0500SQ (See drawing on page: 4-214)					
010	2660290-0000		1	FOLDING FLAP	
020	2660291-0000		1	FOLDING FLAP	
030	2660285-0000		1	CARRIER RULER	
060	2660294-0000		1	PLATE	
210	90459-2258		2	SEAL GLYDRING 25,1X30X2,2 MM	
250	312145-0287		2	SCREW ISO 2009 MFS M4X8 A4	
TPA 0200SQ QC, TPA 0250SQ QC					
010	2728883-0000		1	OLDING FLAP	
020	2728884-0000		1	OLDING FLAP	
030	1255462-0000		1	CARRIER RULER	
TPA 0330SQ (See drawing on page: 4-210)					
010	2507096-0000		1	FOLDING FLAP	
020	2507097-0000		1	FOLDING FLAP	
030	1538769-0000		1	CARRIER RULER	
Common Parts					
040	22462-0000		2	SHAFT	
050	22463-0000		2	ROLL	
200	90141-0029		2	CIRCLIP	

Machine Type	Group Description	Used-In	Group Number	Page No

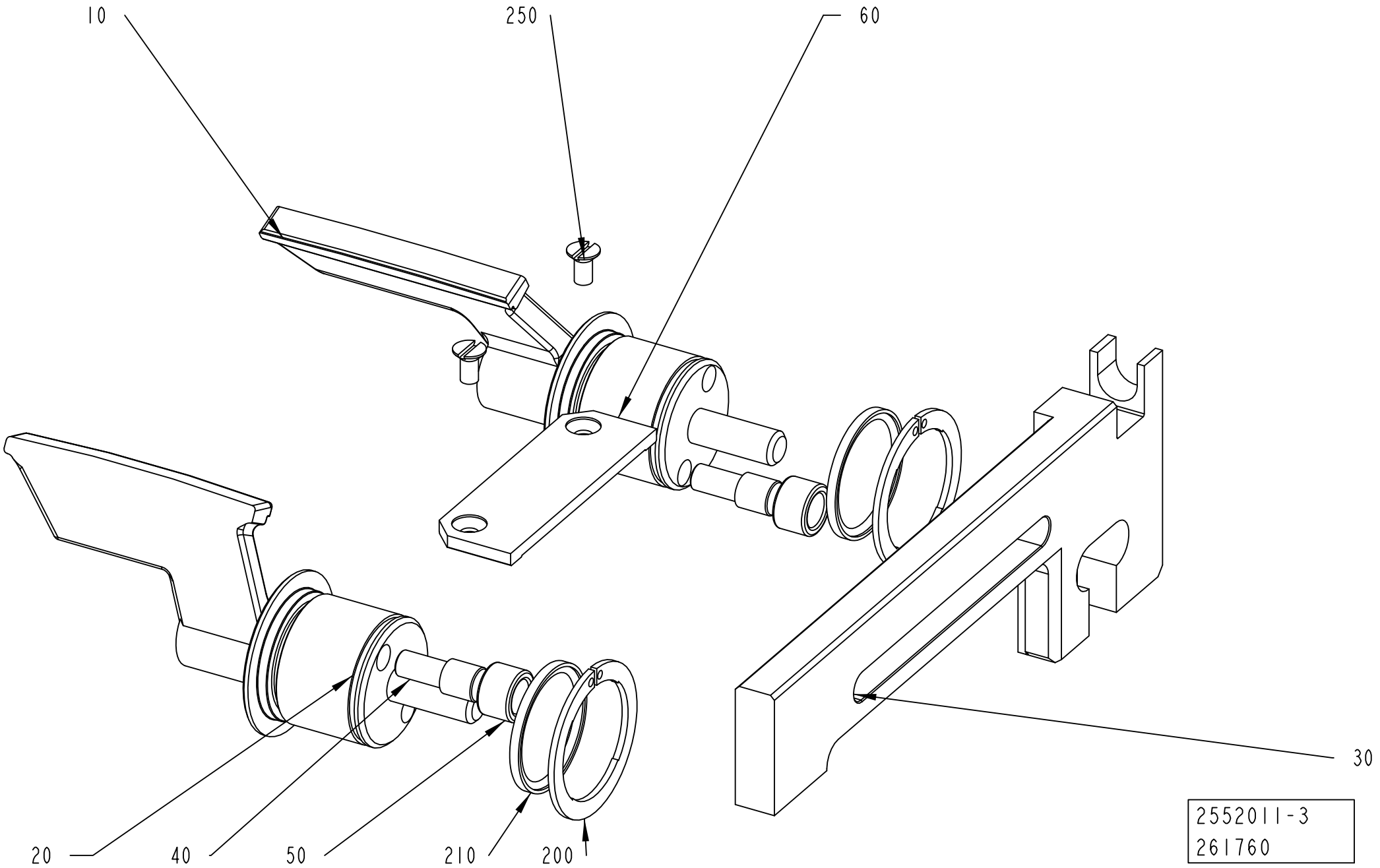
10
250
60
30
20
40
50
210
200
2552011-3
261760

ECM: 360775 - 20081001
Group number: 2552011-0100
Assembly Drawing: 2552011-3_1_AA

This list covers pages from 4-210 to 4-217

Pos	Part No	UN	Qty	Description	Page No
TPA 0500SQ (See drawing on page: 4-210)					
010	1549822-0000		1	FOLDING FLAP	
020	1549823-0000		1	FOLDING FLAP	
030	1549825-0000		1	CARRIER RULER	
TPA 1000SQ NOQC, TPA 1000SQ QC, TPA 0750SQ QC (See drawing on page: 4-210)					
010	1523146-0000		1	FOLDING FLAP	
020	1523147-0000		1	FOLDING FLAP	
030	1523148-0000		1	CARRIER RULER	
TBA 0200B QC, TBA 0330S QC, TBA 0250B QC (See drawing on page: 4-210)					
010	2605875-0000		1	FOLDING FLAP	
020	2605876-0000		1	FOLDING FLAP	
030	1255463-0000		1	CARRIER RULER	
TBA 0200M QC, TBA 0250S QC					
010	2624554-0000		1	FOLDING FLAP	
020	2624555-0000		1	FOLDING FLAP	
030	2520471-0000		1	CARRIER RULER	
TBA 0200S (See drawing on page: 4-210)					
010	2624554-0000		1	FOLDING FLAP	
020	2624555-0000		1	FOLDING FLAP	
030	1255462-0000		1	CARRIER RULER	
TBA 0200SQ QC, TBA 0250SQ QC (See drawing on page: 4-210)					
010	2668313-0000		1	FOLDING FLAP	
020	2668314-0000		1	FOLDING FLAP	
030	2736139-0000		1	CARRIER RULER	
TBA 0500B NOQC, TBA 1000B NOQC NOMOLDEDCAP (See drawing on page: 4-210)					
010	1511697-0000		1	FOLDING FLAP	
020	1511698-0000		1	FOLDING FLAP	
030	1255461-0000		1	CARRIER RULER	
TBA 0500B QC, TBA 1000B QC (See drawing on page: 4-210)					
010	1511352-0000		1	FOLDING FLAP	
020	1511351-0000		1	FOLDING FLAP	
030	1255461-0000		1	CARRIER RULER	
TBA 0500S (See drawing on page: 4-210)					
010	2507085-0000		1	FOLDING FLAP	
020	2507086-0000		1	FOLDING FLAP	
030	1511188-0000		1	CARRIER RULER	
TBA 0500SQ QC, TBA 1000SQ QC (See drawing on page: 4-216)					
010	2843850-0000		1	FOLDING FLAP	
020	2843851-0000		1	FOLDING FLAP	
030	1360319-0000		1	CARRIER RULER	
070	2843780-0000		2	PLATE	
260	312105-0323		4	SCREW M6S ISO 4017 M5X8 A480	
TBA 1000B NOQC STDA7 (See drawing on page: 4-210)					
010	1511697-0000		1	FOLDING FLAP	
020	1511698-0000		1	FOLDING FLAP	
030	1255461-0000		1	CARRIER RULER	
TBA 1000S NOMOLDEDCAP, TBA 1000S STDA7, TBA 1000S LIGHTCAP (See drawing on page: 4-210)					
010	1511699-0000		1	FOLDING FLAP	
020	1511700-0000		1	FOLDING FLAP	
030	1255464-0000		1	CARRIER RULER	
TBA 1000SQ NOQC (See drawing on page: 4-210)					
010	2507076-0000		1	FOLDING FLAP	
020	2507077-0000		1	FOLDING FLAP	
030	1360319-0000		1	CARRIER RULER	
TBA 1500S (See drawing on page: 4-210)					
010	2507092-0000		1	FOLDING FLAP	
020	2507093-0000		1	FOLDING FLAP	
030	1255461-0000		1	CARRIER RULER	
TBA 1890S QC, TBA 2000S QC, TBA 1400B (See drawing on page: 4-212)					
010	2566319-0000		1	FOLDING FLAP	
020	2566320-0000		1	FOLDING FLAP	
030	2566317-0000		1	CARRIER RULER	
210	90459-2258		2	SEAL GLYDRING 25,1X30X2,2 MM	
TGA 1000SQ, TGA 0750SQ, TGA 0500SQ (See drawing on page: 4-214)					
010	2660290-0000		1	FOLDING FLAP	
020	2660291-0000		1	FOLDING FLAP	
030	2660285-0000		1	CARRIER RULER	
060	2660294-0000		1	PLATE	
210	90459-2258		2	SEAL GLYDRING 25,1X30X2,2 MM	
250	312145-0287		2	SCREW ISO 2009 MFS M4X8 A4	
TPA 0200SQ QC, TPA 0250SQ QC					
010	2728883-0000		1	OLDING FLAP	
020	2728884-0000		1	OLDING FLAP	
030	1255462-0000		1	CARRIER RULER	
TPA 0330SQ (See drawing on page: 4-210)					
010	2507096-0000		1	FOLDING FLAP	
020	2507097-0000		1	FOLDING FLAP	
030	1538769-0000		1	CARRIER RULER	
Common Parts					
040	22462-0000		2	SHAFT	
050	22463-0000		2	ROLL	
200	90141-0029		2	CIRCLIP	

Machine Type | Group Description | Used-In | Group Number | Page No

FOLDING FLAP RIGHT

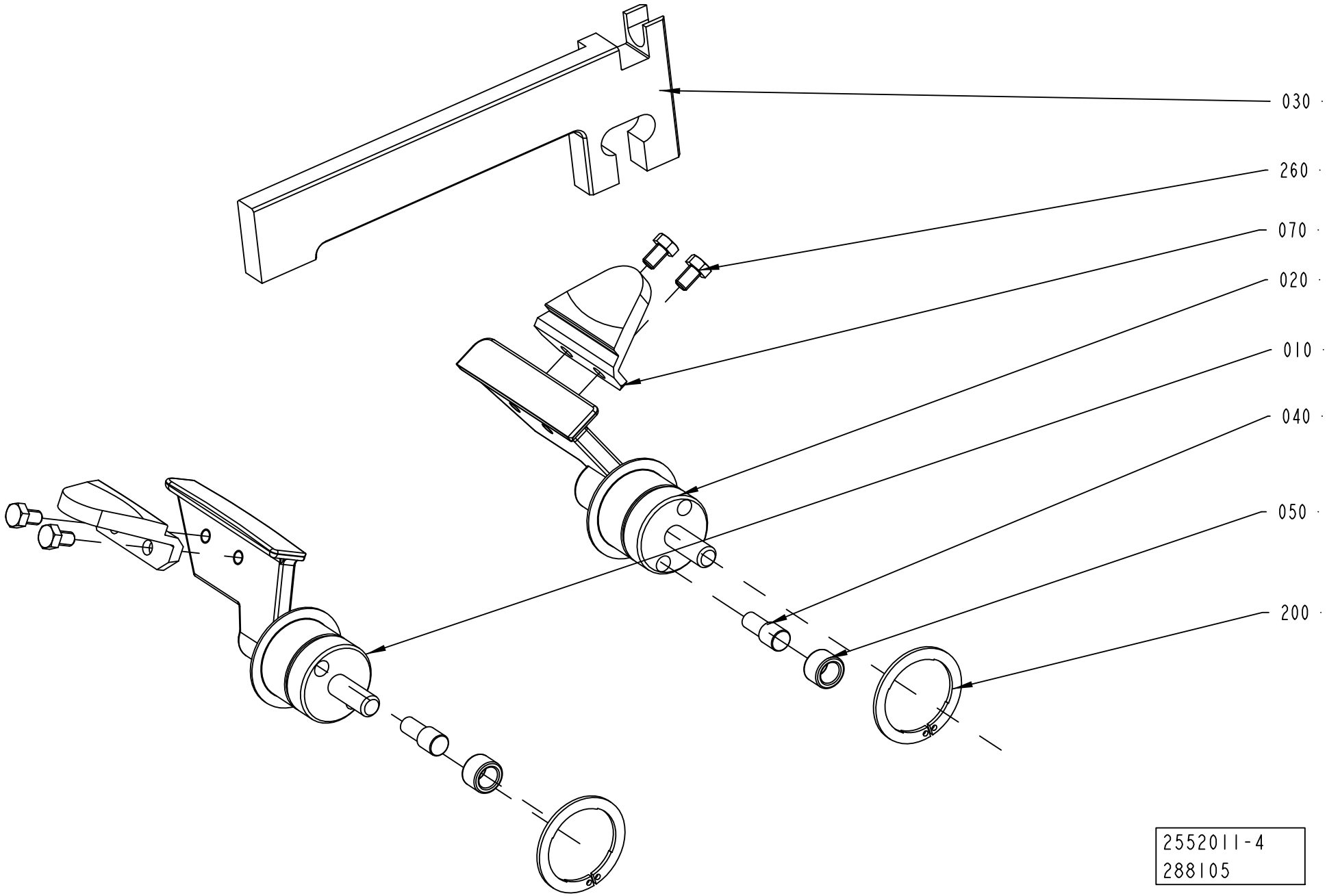

ECM: 360775 - 20081001
Group number: 2552011-0100
Assembly Drawing: 2552011-4_1_AA

This list covers pages from 4-210 to 4-217

Pos	Part No	UN	Qty	Description	Page No
TPA 0500SQ (See drawing on page: 4-210)					
010	1549822-0000		1	FOLDING FLAP	
020	1549823-0000		1	FOLDING FLAP	
030	1549825-0000		1	CARRIER RULER	
TPA 1000SQ NOQC, TPA 1000SQ QC, TPA 0750SQ QC (See drawing on page: 4-210)					
010	1523146-0000		1	FOLDING FLAP	
020	1523147-0000		1	FOLDING FLAP	
030	1523148-0000		1	CARRIER RULER	
TBA 0200B QC, TBA 0330S QC, TBA 0250B QC (See drawing on page: 4-210)					
010	2605875-0000		1	FOLDING FLAP	
020	2605876-0000		1	FOLDING FLAP	
030	1255463-0000		1	CARRIER RULER	
TBA 0200M QC, TBA 0250S QC					
010	2624554-0000		1	FOLDING FLAP	
020	2624555-0000		1	FOLDING FLAP	
030	2520471-0000		1	CARRIER RULER	
TBA 0200S (See drawing on page: 4-210)					
010	2624554-0000		1	FOLDING FLAP	
020	2624555-0000		1	FOLDING FLAP	
030	1255462-0000		1	CARRIER RULER	
TBA 0200SQ QC, TBA 0250SQ QC (See drawing on page: 4-210)					
010	2668313-0000		1	FOLDING FLAP	
020	2668314-0000		1	FOLDING FLAP	
030	2736139-0000		1	CARRIER RULER	
TBA 0500B NOQC, TBA 1000B NOQC NOMOLDEDCAP (See drawing on page: 4-210)					
010	1511697-0000		1	FOLDING FLAP	
020	1511698-0000		1	FOLDING FLAP	
030	1255461-0000		1	CARRIER RULER	
TBA 0500B QC, TBA 1000B QC (See drawing on page: 4-210)					
010	1511352-0000		1	FOLDING FLAP	
020	1511351-0000		1	FOLDING FLAP	
030	1255461-0000		1	CARRIER RULER	
TBA 0500S (See drawing on page: 4-210)					
010	2507085-0000		1	FOLDING FLAP	
020	2507086-0000		1	FOLDING FLAP	
030	1511188-0000		1	CARRIER RULER	
TBA 0500SQ QC, TBA 1000SQ QC (See drawing on page: 4-216)					
010	2843850-0000		1	FOLDING FLAP	
020	2843851-0000		1	FOLDING FLAP	
030	1360319-0000		1	CARRIER RULER	
070	2843780-0000		2	PLATE	
260	312105-0323		4	SCREW M6S ISO 4017 M5X8 A480	
TBA 1000B NOQC STDA7 (See drawing on page: 4-210)					
010	1511697-0000		1	FOLDING FLAP	
020	1511698-0000		1	FOLDING FLAP	
030	1255461-0000		1	CARRIER RULER	
TBA 1000S NOMOLDEDCAP, TBA 1000S STDA7, TBA 1000S LIGHTCAP (See drawing on page: 4-210)					
010	1511699-0000		1	FOLDING FLAP	
020	1511700-0000		1	FOLDING FLAP	
030	1255464-0000		1	CARRIER RULER	
TBA 1000SQ NOQC (See drawing on page: 4-210)					
010	2507076-0000		1	FOLDING FLAP	
020	2507077-0000		1	FOLDING FLAP	
030	1360319-0000		1	CARRIER RULER	
TBA 1500S (See drawing on page: 4-210)					
010	2507092-0000		1	FOLDING FLAP	
020	2507093-0000		1	FOLDING FLAP	
030	1255461-0000		1	CARRIER RULER	
TBA 1890S QC, TBA 2000S QC, TBA 1400B (See drawing on page: 4-212)					
010	2566319-0000		1	FOLDING FLAP	
020	2566320-0000		1	FOLDING FLAP	
030	2566317-0000		1	CARRIER RULER	
210	90459-2258		2	SEAL GLYDRING 25,1X30X2,2 MM	
TGA 1000SQ, TGA 0750SQ, TGA 0500SQ (See drawing on page: 4-214)					
010	2660290-0000		1	FOLDING FLAP	
020	2660291-0000		1	FOLDING FLAP	
030	2660285-0000		1	CARRIER RULER	
060	2660294-0000		1	PLATE	
210	90459-2258		2	SEAL GLYDRING 25,1X30X2,2 MM	
250	312145-0287		2	SCREW ISO 2009 MFS M4X8 A4	
TPA 0200SQ QC, TPA 0250SQ QC					
010	2728883-0000		1	OLDING FLAP	
020	2728884-0000		1	OLDING FLAP	
030	1255462-0000		1	CARRIER RULER	
TPA 0330SQ (See drawing on page: 4-210)					
010	2507096-0000		1	FOLDING FLAP	
020	2507097-0000		1	FOLDING FLAP	
030	1538769-0000		1	CARRIER RULER	
Common Parts					
040	22462-0000		2	SHAFT	
050	22463-0000		2	ROLL	
200	90141-0029		2	CIRCLIP	

Machine Type	Group Description	Used-In	Group Number	Page No

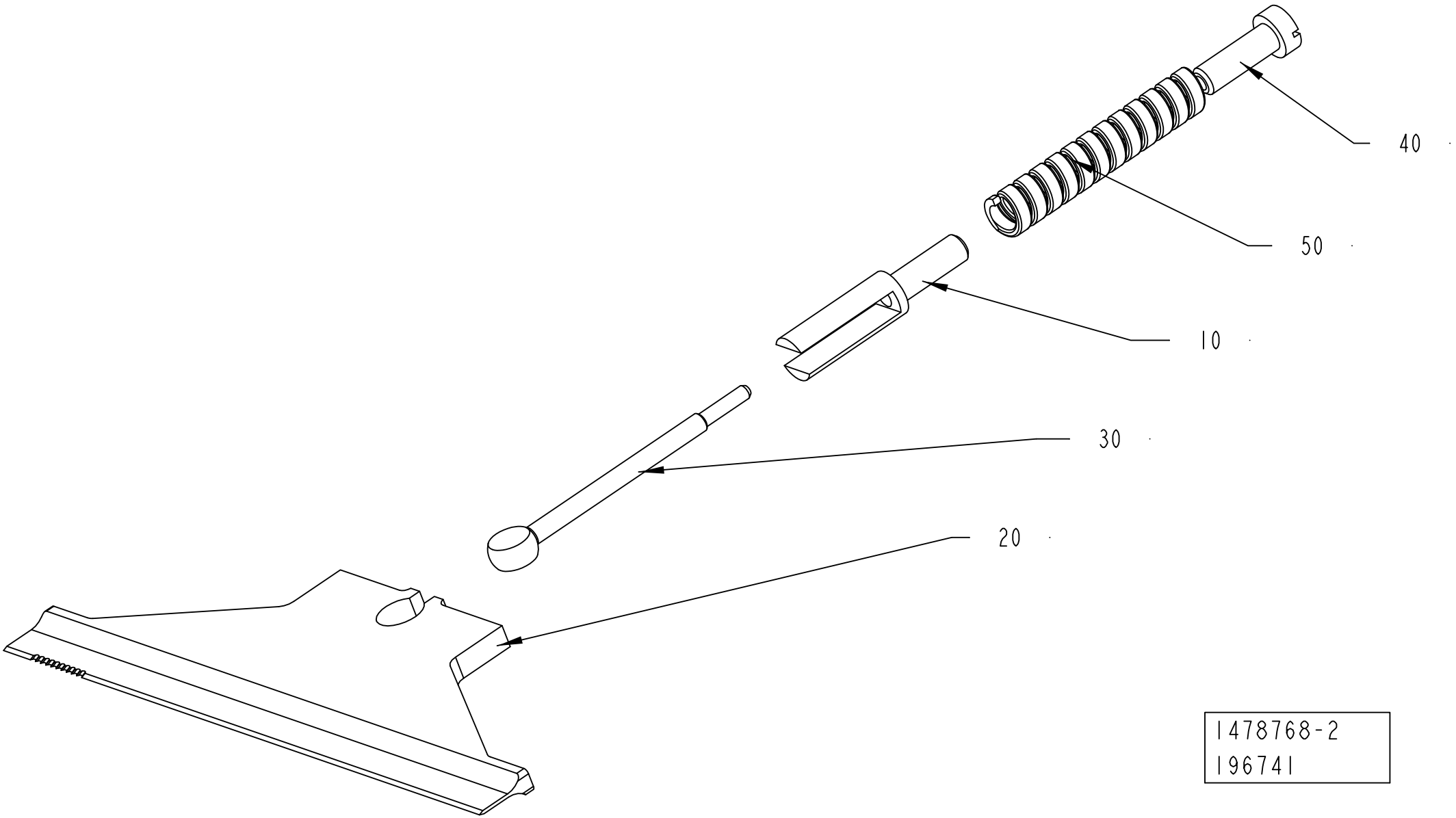
40
50
10
30
20
1478768-2
196741

ECM: 345077 - 20080701
Group number: 1478768-0200
Assembly Drawing: 1478768-2_1_AA

Pos	Part No	UN	Qty	Description	Page No
TBA 0200M, TBA 0200B, TBA 0200SQ, TBA 0200S, TBA 0250S, TBA 0250B, TBA 0330S, TPA 0330SQ, TPA 0250SQ, TPA 0200SQ, TBA 0250SQ					
020	1348966-0000		1	KNIFE	
050	2774493-0000		1	COMPRESSION SPRING	
TBA 0500S, TPA 1000SQ, TPA 0750SQ, TGA 1000SQ, TGA 0750SQ, TGA 0500SQ					
020	1348956-0000		1	KNIFE	
050	1538109-0000		1	COMPRESSION SPRING	
TBA 0500SQ, TBA 0500B, TBA 1000B, TBA 1000SQ, TBA 1000S, TBA 1500S					
020	1348955-0000		1	KNIFE	
050	1538109-0000		1	COMPRESSION SPRING	
TBA 1890S, TBA 2000S, TBA 1400B					
020	2664761-0000		1	KNIFE	
050	1538109-0000		1	COMPRESSION SPRING	
TPA 0500SQ					
020	1549828-0000		1	KNIFE	
050	1538109-0000		1	COMPRESSION SPRING	
Common Parts					
010	1285006-0000		1	SPACER	
030	1285003-0000		1	LINK	
040	1285005-0000		1	NUT	

Pos	Part No	UN	Qty	Description	Page No

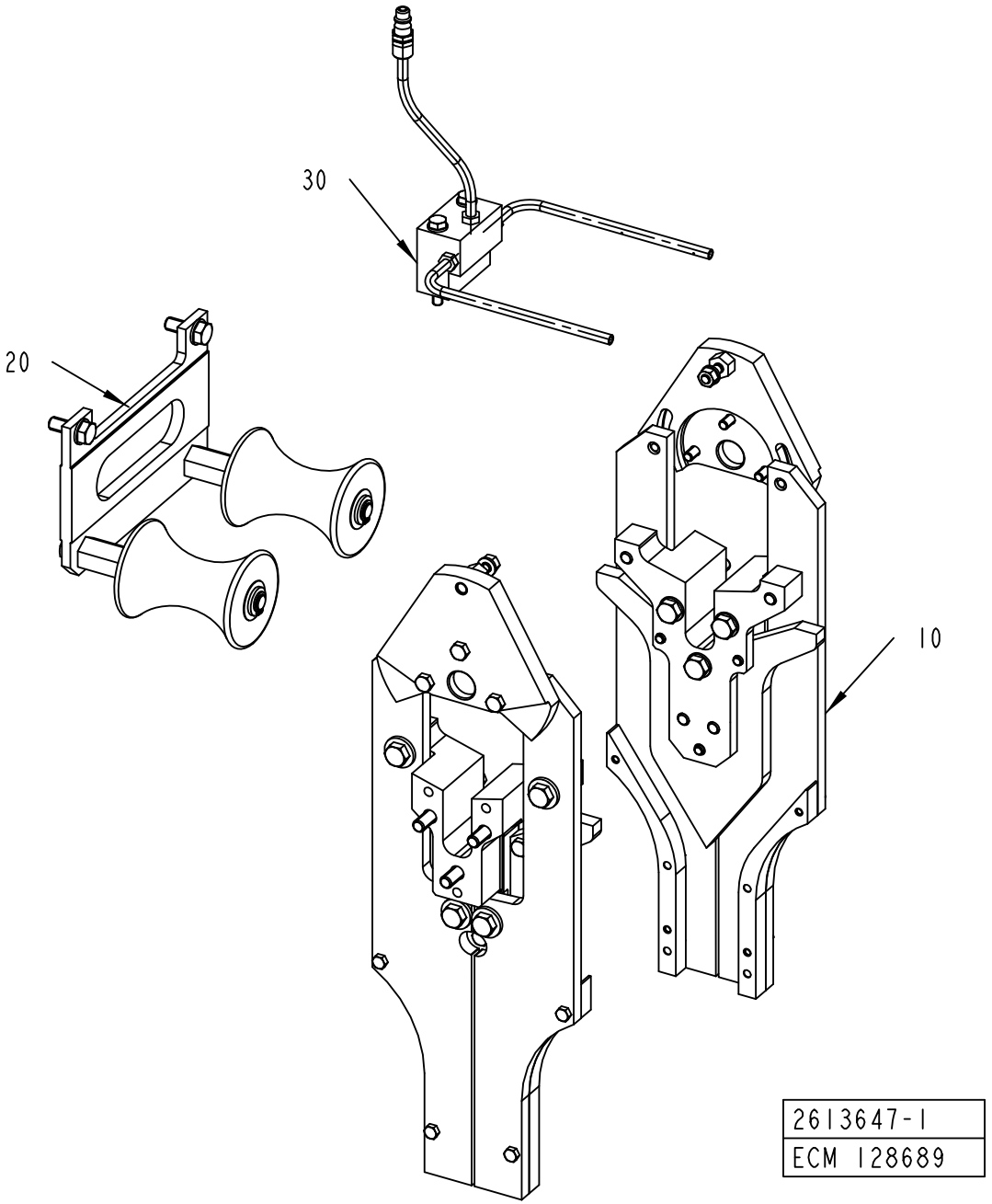
30
20
10
2613647-1
ECM 128689

ECM: 345371 - 20080701
Group number: 2613647-0100
Assembly Drawing: 2613647-1_1_AA

Pos	Part No	UN	Qty	Description	Page No
TBA 0200B, TBA 0250B, TBA 0330S, TBA 0500B QC, TBA 1000B QC, TBA 0200M QC, TBA 0250S QC, TPA 0200SQ QC, TPA 0250SQ QC, TBA 0200SQ QC, TBA 0250SQ QC					
010	2613645-0100		1	CURVE UNIT	**4-223, 4-225**
TBA 0200S, TBA 0500S, TBA 1500S, TPA 0330SQ, TPA 0500SQ, TBA 1000S NOMOLDEDCAP, TBA 1000S STDA7, TBA 1000B NOQC NOMOLDEDCAP, TBA 1000B NOQC STDA7, TBA 1890S QC, TBA 2000S QC, TPA 1000SQ NOQC, TPA 1000SQ QC, TPA 0750SQ QC, TBA 1400B, TGA 1000SQ, TBA 1000S LIGHTCAP, TBA 1000SQ NOQC, TBA 0500SQ QC, TBA 1000SQ QC, TGA 0750SQ, TGA 0500SQ					
010	2597329-0100		1	CURVE UNIT	**4-231, 4-233, 4-235, 4-237, 4-239, 4-241**
Common Parts					
020	2613648-0100		1	SUPPORT ROLLER	**4-243, 4-245**
030	2556893-0100		1	TUBE FLUSHING	**4-247**

Pos	Part No	UN	Qty	Description	Page No

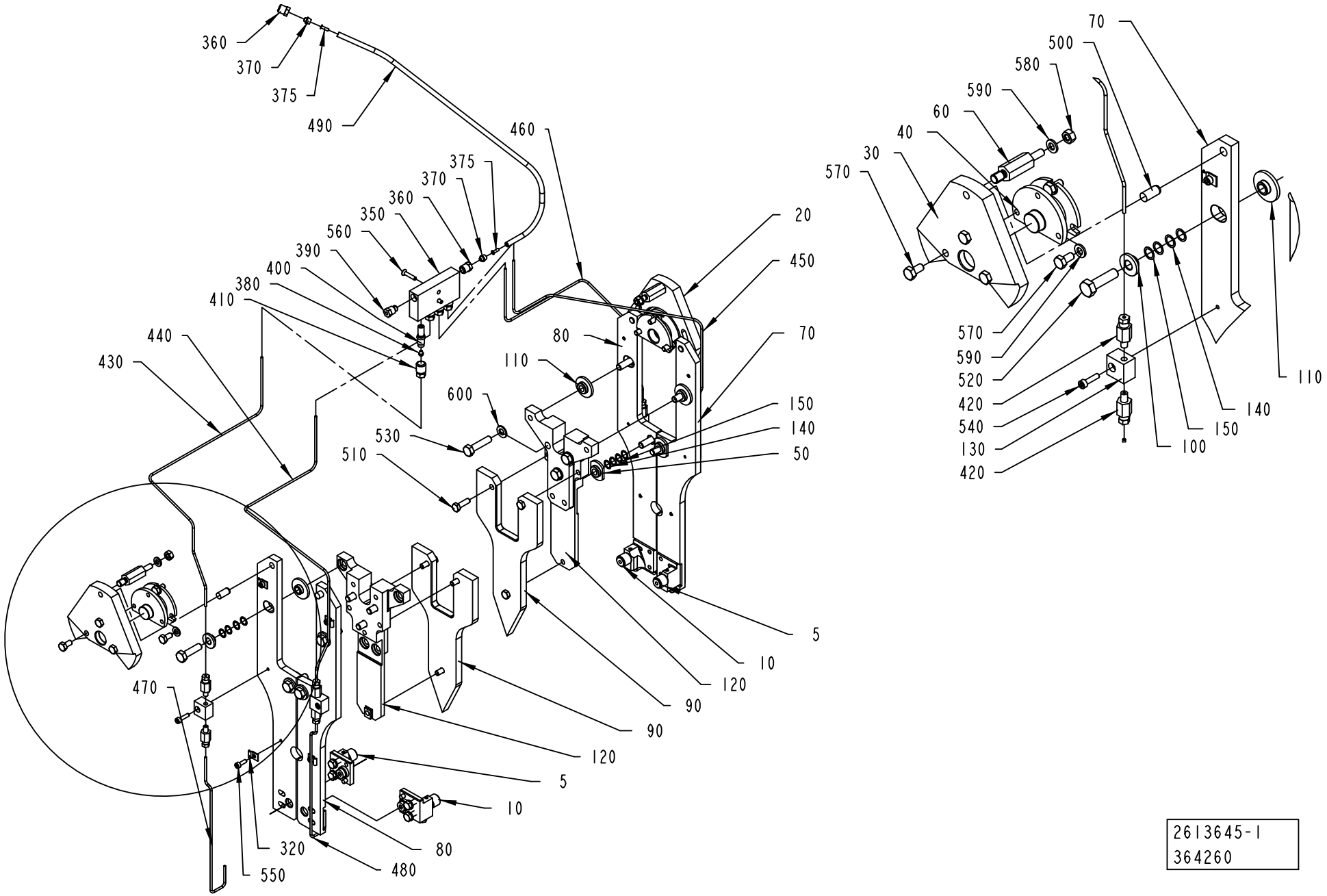

2613645-1
364260

ECM: 367797 - 20090101
Group number: 2613645-0100
Assembly Drawing: 2613645-1_1_AF

This list covers pages from 4-222 to 4-225

Pos	Part No	UN	Qty	Description	Page No
TBA 0200B, TBA 0250B, TBA 0330S (See drawing on page: 4-224)					
020	2618377-0000		1	ECCENTRIC	
030	2618378-0000		1	ECCENTRIC	
060	2618302-0000		2	PIVOT PIN	
090	2771550-0000		2	CAM	
115	2769546-0000		6	SPACER	
360	90134-0055		2	BUSHING/NUT INLET/OUTLET 6 MM	
370	90028-0025		2	CONE TUBE 6 MM	
375	90134-0030		2	SLEEVE FOR PLASTIC TUBE	
470	90266-0019	MM	260	PIPE	
480	90266-0019	MM	260	PIPE	
490	90166-0108	MM	500	TUBE 6 MM PA TRANSP.	
570	312105-0366		12	SCREW M6S ISO 4017 M6X12 A480	
590	315105-0153		8	WASHER BRB 6,4X12 RFR	
TBA 0200M, TBA 0250S (See drawing on page: 4-224)					
020	2618377-0000		1	ECCENTRIC	
030	2618378-0000		1	ECCENTRIC	
060	2618302-0000		2	PIVOT PIN	
090	2769340-0000		2	CAM	
115	2769546-0000		6	SPACER	
360	90134-0055		2	BUSHING/NUT INLET/OUTLET 6 MM	
370	90028-0025		2	CONE TUBE 6 MM	
375	90134-0030		2	SLEEVE FOR PLASTIC TUBE	
470	90266-0019	MM	260	PIPE	
480	90266-0019	MM	260	PIPE	
490	90166-0108	MM	500	TUBE 6 MM PA TRANSP.	
570	312105-0366		12	SCREW M6S ISO 4017 M6X12 A480	
590	315105-0153		8	WASHER BRB 6,4X12 RFR	
TBA 0200SQ, TBA 0250SQ (See drawing on page: 4-222)					
020	2618377-0000		1	ECCENTRIC	
030	2618378-0000		1	ECCENTRIC	
060	2618302-0000		2	PIVOT PIN	
090	2747139-0000		2	CAM	
360	90134-0038		1	BUSHING/NUT INLET/OUTLET 4 MM	
370	90028-0024		1	CONE TUBE 4 MM	
470	90266-0019	MM	290	PIPE	
480	90266-0019	MM	290	PIPE	
570	312105-0366		12	SCREW M6S ISO 4017 M6X12 A480	
590	315105-0153		8	WASHER BRB 6,4X12 RFR	
TBA 0500B, TBA 1000B (See drawing on page: 4-222)					
020	2618377-0000		1	ECCENTRIC	
030	2618378-0000		1	ECCENTRIC	
060	2618302-0000		2	PIVOT PIN	
090	2605066-0000		2	CURVE	
360	90134-0055		2	BUSHING/NUT INLET/OUTLET 6 MM	
370	90028-0025		2	CONE TUBE 6 MM	
375	90134-0030		2	SLEEVE FOR PLASTIC TUBE	
470	90266-0019	MM	260	PIPE	
480	90266-0019	MM	260	PIPE	
490	90166-0108	MM	500	TUBE 6 MM PA TRANSP.	
570	312105-0366		12	SCREW M6S ISO 4017 M6X12 A480	
590	315105-0153		8	WASHER BRB 6,4X12 RFR	
TPA 0250SQ, TPA 0200SQ (See drawing on page: 4-224)					
020	2618377-0000		1	ECCENTRIC	
030	2618378-0000		1	ECCENTRIC	
060	2618302-0000		2	PIVOT PIN	
090	2771551-0000		2	CAM	
115	2769546-0000		6	SPACER	
360	90134-0055		2	BUSHING/NUT INLET/OUTLET 6 MM	
370	90028-0025		2	CONE TUBE 6 MM	
375	90134-0030		2	SLEEVE FOR PLASTIC TUBE	
470	90266-0019	MM	260	PIPE	
480	90266-0019	MM	260	PIPE	
490	90166-0108	MM	500	TUBE 6 MM PA TRANSP.	
570	312105-0366		12	SCREW M6S ISO 4017 M6X12 A480	
590	315105-0153		8	WASHER BRB 6,4X12 RFR	
Common Parts					
005	2605226-0200		2	ROLLER UNIT	**4-227**
010	1499351-0200		2	ROLLER UNIT	**4-229**
040	2618259-0000		2	SPACER	
050	2613763-0000		4	SLEEVE	
070	2614371-0000		2	ROLLER BRACKET	
080	2614373-0000		2	ROLLER BRACKET	
100	2614372-0000		8	SLEEVE	
110	2613764-0000		4	SLEEVE	
120	2613809-0000		2	SPACER	
130	2610793-0000		4	BLOCK	
140	2614376-0001		16	WASHER	
150	2614376-0002		16	WASHER	
320	90165-0058		8	PIPE CLIP FOR TUBE D=2,5 MM	
350	90032-0039		1	BLOCK 4 WAYS	
380	90028-0020		4	CONE TUBE 2,5MM	
390	90087-0019		1	PLUG M10X1 STAINLESS	
400	90092-0052		4	METERING VALVE 10 MM3	

Machine Type | Group Description | Used-In | Group Number | Page No

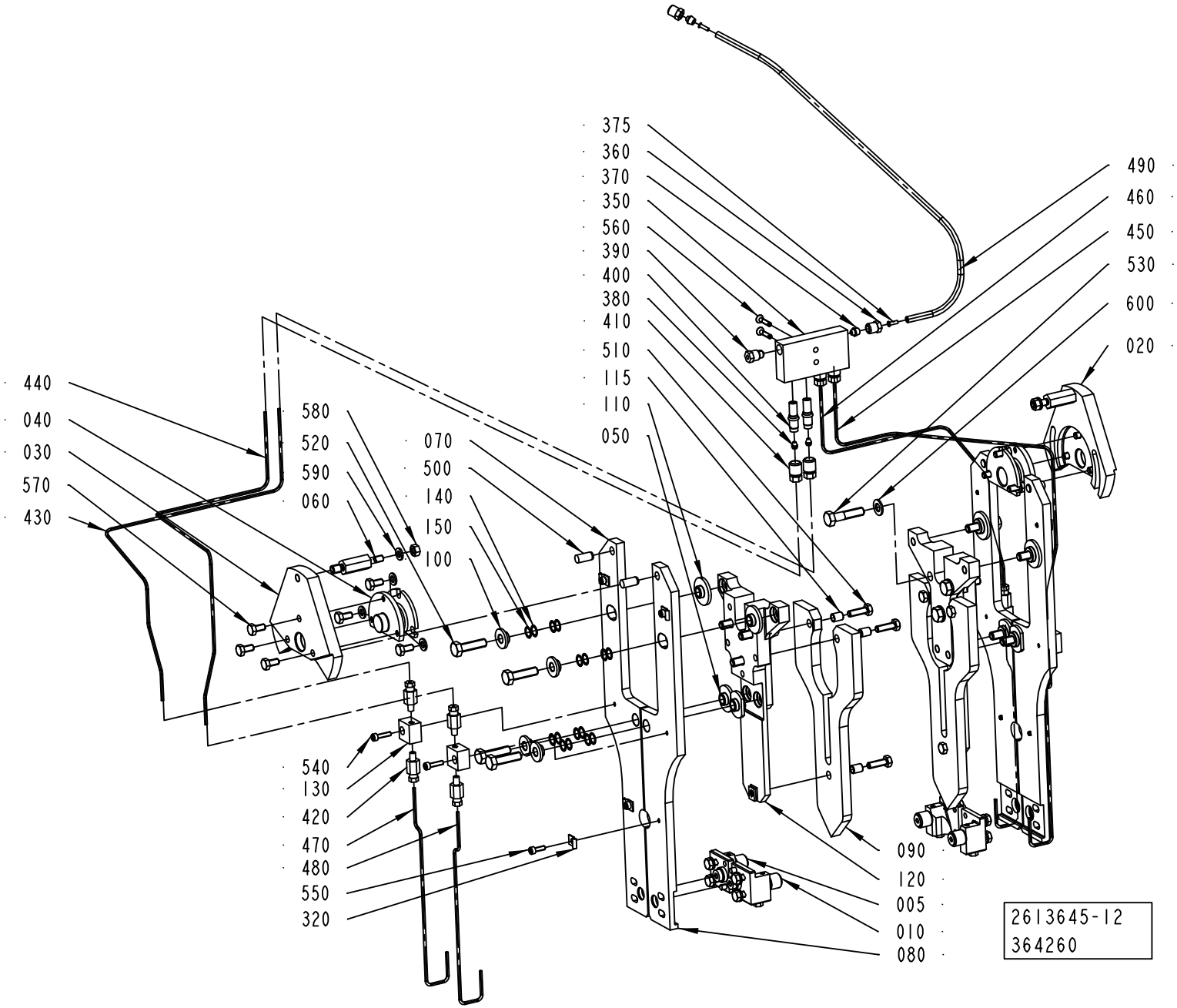
375
360
370
350
560
390
400
380
410
510
115
110
050
490
460
450
530
600
020
440
040
030
570
430
580
520
590
060
070
500
140
150
100
540
130
420
470
480
550
320
090
120
005
010
080
2613645-12
364260

ECM: 367797 - 20090101
Group number: 2613645-0100
Assembly Drawing: 2613645-12_1_AB

This list covers pages from 4-222 to 4-225

Pos	Part No	UN	Qty	Description	Page No
Common Parts (Cont'd)					
410	90134-0039		4	BUSHING VALVE CONNECTION 2,5 MM	
420	90134-0065		8	CONNECTION M6 TUBE 2,5 MM	
430	90166-0143	MM	550	TUBE 2,5 MM PA TRANSP.	
440	90166-0143	MM	650	TUBE 2,5 MM PA TRANSP.	
450	90166-0143	MM	600	TUBE 2,5 MM PA TRANSP.	
460	90166-0143	MM	500	TUBE 2,5 MM PA TRANSP.	
500	311103-0400		4	PARALLEL PIN ISO 2338 8M6X18 A	
510	312105-0370		6	SCREW M6S ISO 4017 M6X20 A480	
520	312105-0455		8	SCREW M6S ISO 4017 M8X30 A480	
530	312105-0457		6	SCREW M6S ISO 4014 M8X35 A480	
540	312115-0293		4	SCREW ISO4762 M4X16 A4 80	
550	312115-0291		8	SCREW ISO4762 M4X12 A4 80	
560	312155-0295		2	SCREW DIN 7991 MF6S M4X20 A4 70	
580	312605-0316		2	HEXAGON NUT, M6M M6 A280	
600	315105-0165		6	WASHER BRB 8,4X16 RFR	

Pos	Part No	UN	Qty	Description	Page No

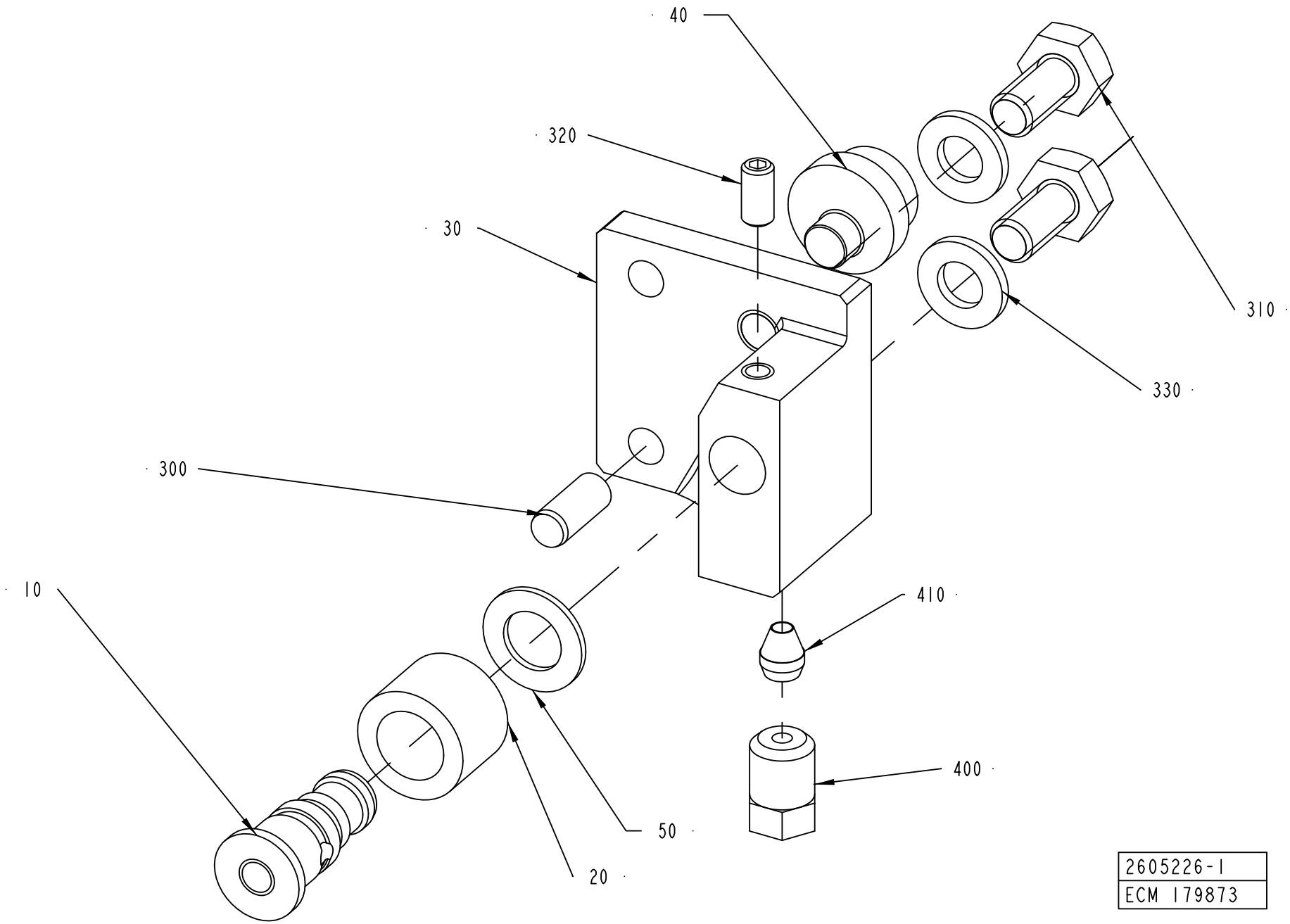
40
320
30
310
330
300
10
410
400
50
20
2605226-1
ECM 179873

ECM: 340825 - 20080215
Group number: 2605226-0200
Assembly Drawing: 2605226-1_1_AB

Pos	Part No	UN	Qty	Description	Page No
TBA 0200M, TBA 0200B, TBA 0200SQ, TBA 0250S, TBA 0250B, TBA 0330S, TBA 0500B, TBA 1000B, TPA 0250SQ, TPA 0200SQ, TBA 0250SQ					
030	2695409-0000		1	HOLDER	
Common Parts					
010	2603376-0000		1	AXLE PIN	
020	2603378-0000		1	ROLLER	
040	2603374-0000		1	ECCENTRIC	
050	2609923-0000		1	WASHER	
300	311103-0306		1	PARALLEL PIN ISO 2338 5M6X12 A1	
310	312105-0366		2	SCREW M6S ISO 4017 M6X12 A480	
320	312318-0287		1	SCREW ISO4029 M4X8 A4	
330	315105-0153		2	WASHER BRB 6,4X12 RFR	
400	90134-0063		1	BUSHING/NUT M8X1, D=2,5 MM	
410	90028-0020		1	CONE TUBE 2,5MM	

Pos	Part No	UN	Qty	Description	Page No

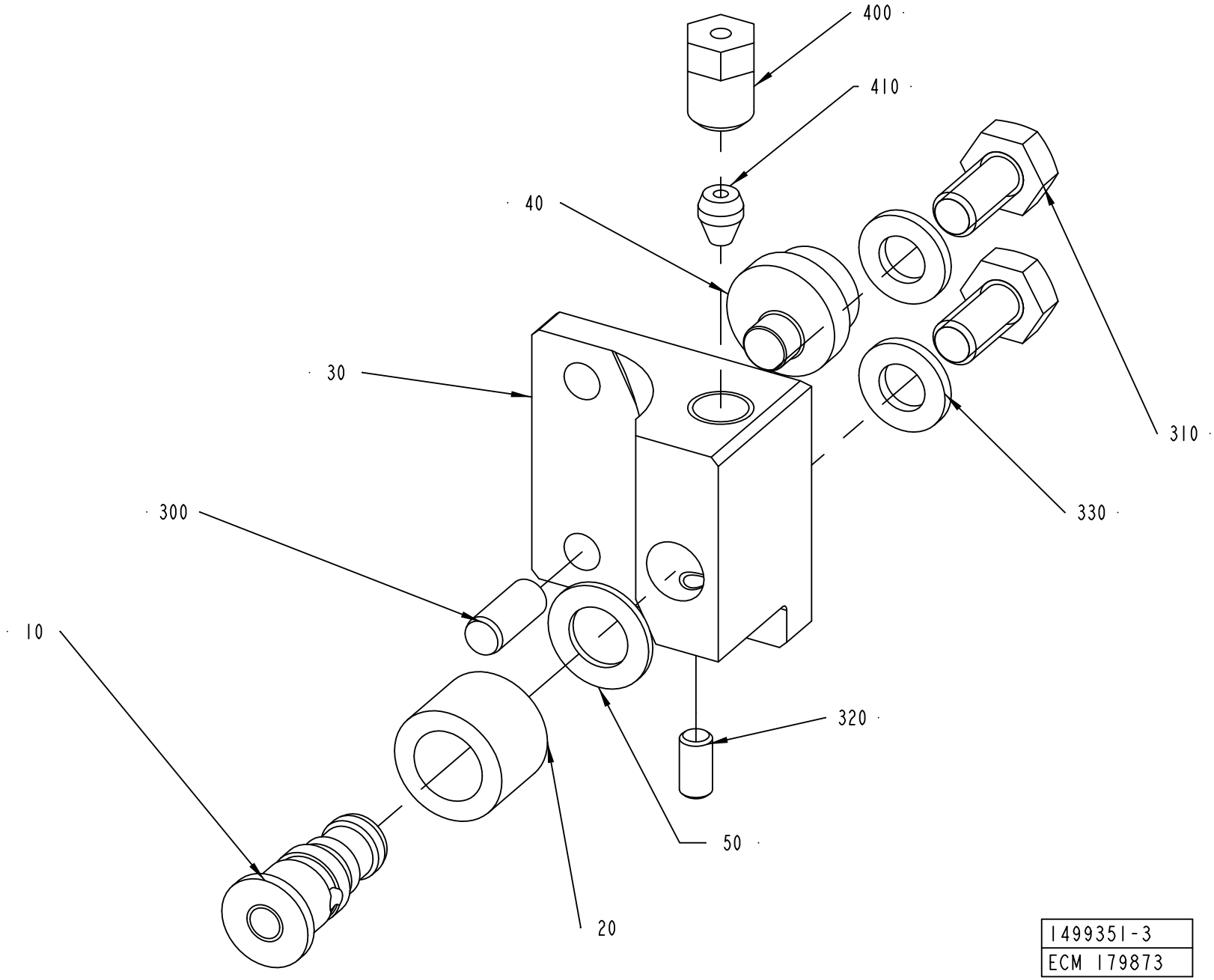
400
410
40
30
310
330
300
10
320
50
20
1499351-3
ECM 179873

ECM: 340719 - 20080215
Group number: 1499351-0200
Assembly Drawing: 1499351-3_1_AB

Pos	Part No	UN	Qty	Description	Page No
TBA 0200M, TBA 0200B, TBA 0200SQ, TBA 0250S, TBA 0250B, TBA 0330S, TBA 0500B, TBA 1000B, TPA 0250SQ, TPA 0200SQ, TBA 0250SQ					
030	2695408-0000		1	HOLDER	
Common Parts					
010	2603376-0000		1	AXLE PIN	
020	2603378-0000		1	ROLLER	
040	2603374-0000		1	ECCENTRIC	
050	2609923-0000		1	WASHER	
300	311103-0306		1	PARALLEL PIN ISO 2338 5M6X12 A1	
310	312105-0366		2	SCREW M6S ISO 4017 M6X12 A480	
320	312318-0287		1	SCREW ISO4029 M4X8 A4	
330	315105-0153		2	WASHER BRB 6,4X12 RFR	
400	90134-0063		1	BUSHING/NUT M8X1, D=2,5 MM	
410	90028-0020		1	CONE TUBE 2,5MM	

Pos	Part No	UN	Qty	Description	Page No

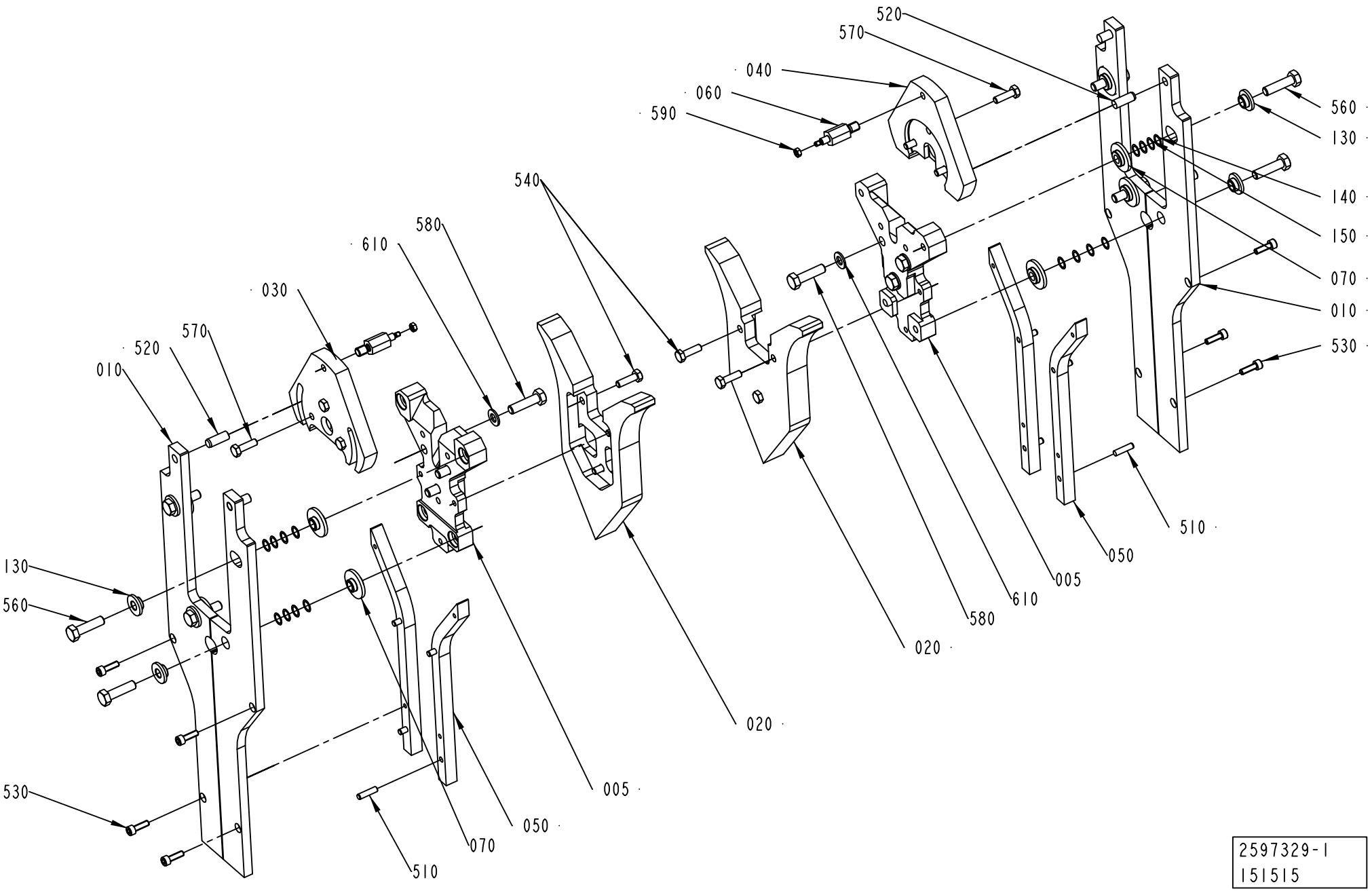

2597329-1
151515

ECM: 375460 - 20090102
Group number: 2597329-0100
Assembly Drawing: 2597329-1_1_AA

This list covers pages from 4-230 to 4-241

Pos	Part No	UN	Qty	Description	Page No
TBA 0200S (See drawing on page: 4-232)					
005	2628598-0000		2	SPACER	
010	2533740-0000		4	RAIL BRACKET	
020	1334081-0000		2	CURVE	
030	2606891-0000		1	ECCENTRIC	
040	2606892-0000		1	ECCENTRIC	
050	1478497-0000		4	VOLUME CAM	
060	2624544-0000		2	PIVOT PIN	
070	2533736-0000		8	SLEEVE	
120	321120-0108		4	BEARING BUSH W/O FLANGE, 12X14X8 MM	
130	1487504-0000		8	WASHER	
140	1487505-0001		16	WASHER	
150	1487505-0002		16	WASHER	
520	311103-0399		4	PARALLEL PIN ISO 2338 8M6X16 A1	
530	312105-0331		8	SCREW M6S ISO 4017 M5X20 A480	
560	312105-0457		8	SCREW M6S ISO 4014 M8X35 A480	
570	312105-0368		6	SCREW M6S ISO 4017 M6X16 A480	
580	312105-0464		6	SCREW M6S ISO 4014 M8X65 A480	
590	312605-0316		2	HEXAGON NUT, M6M M6 A280	
600	315105-0153		2	WASHER BRB 6,4X12 RFR	
TBA 0500S (See drawing on page: 4-232)					
005	2624543-0000		2	SPACER	
010	2533745-0000		4	RAIL BRACKET	
020	1512324-0000		2	CURVE	
030	2618378-0000		1	ECCENTRIC	
040	2618377-0000		1	ECCENTRIC	
050	1512325-0000		4	VOLUME CAM	
060	2624544-0000		2	PIVOT PIN	
070	2533736-0000		8	SLEEVE	
120	321120-0108		4	BEARING BUSH W/O FLANGE, 12X14X8 MM	
130	1487504-0000		8	WASHER	
140	1487505-0001		16	WASHER	
150	1487505-0002		16	WASHER	
520	311103-0399		4	PARALLEL PIN ISO 2338 8M6X16 A1	
530	312105-0331		8	SCREW M6S ISO 4017 M5X20 A480	
560	312105-0457		8	SCREW M6S ISO 4014 M8X35 A480	
570	312105-0368		6	SCREW M6S ISO 4017 M6X16 A480	
580	312105-0464		6	SCREW M6S ISO 4014 M8X65 A480	
590	312605-0316		2	HEXAGON NUT, M6M M6 A280	
600	315105-0153		2	WASHER BRB 6,4X12 RFR	
TBA 0500SQ QC, TBA 1000SQ QC (See drawing on page: 4-238)					
005	2850478-0000		2	SPACER	
010	2850479-0000		4	RAIL BRACKET	
020	2850480-0000		2	CURVE	
030	2618378-0000		1	ECCENTRIC	
040	2618377-0000		1	ECCENTRIC	
050	2834330-0000		2	VOLUME CAM	
060	2618302-0000		2	PIVOT PIN	
070	2533736-0000		8	SLEEVE	
080	2834331-0000		2	VOLUME CAM	
090	2618259-0000		2	SPACER	
120	321120-0108		4	BEARING BUSH W/O FLANGE, 12X14X8 MM	
130	1487504-0000		8	WASHER	
140	1487505-0001		16	WASHER	
150	1487505-0002		16	WASHER	
520	311103-0399		4	PARALLEL PIN ISO 2338 8M6X16 A1	
530	312105-0331		8	SCREW M6S ISO 4017 M5X20 A480	
560	312105-0457		8	SCREW M6S ISO 4014 M8X35 A480	
570	312105-0366		6	SCREW M6S ISO 4017 M6X12 A480	
580	312105-0460		6	SCREW M6S ISO 4014 M8X45 A480	
590	312605-0316		2	HEXAGON NUT, M6M M6 A280	
600	315105-0153		2	WASHER BRB 6,4X12 RFR	
TBA 1000B (See drawing on page: 4-232)					
005	2624543-0000		2	SPACER	
010	2533741-0000		4	RAIL BRACKET	
020	1348808-0000		2	CURVE	
030	2618378-0000		1	ECCENTRIC	
040	2618377-0000		1	ECCENTRIC	
050	1484250-0000		4	VOLUME CAM	
060	2624544-0000		2	PIVOT PIN	
070	2533736-0000		8	SLEEVE	
120	321120-0108		4	BEARING BUSH W/O FLANGE, 12X14X8 MM	
130	1487504-0000		8	WASHER	
140	1487505-0001		16	WASHER	
150	1487505-0002		16	WASHER	
520	311103-0399		4	PARALLEL PIN ISO 2338 8M6X16 A1	
530	312105-0331		8	SCREW M6S ISO 4017 M5X20 A480	
560	312105-0457		8	SCREW M6S ISO 4014 M8X35 A480	
570	312105-0368		6	SCREW M6S ISO 4017 M6X16 A480	
580	312105-0464		6	SCREW M6S ISO 4014 M8X65 A480	
590	312605-0316		2	HEXAGON NUT, M6M M6 A280	
600	315105-0153		2	WASHER BRB 6,4X12 RFR	
TBA 1000S (See drawing on page: 4-232)					
005	2624543-0000		2	SPACER	

Machine Type | Group Description | Used-In | Group Number | Page No

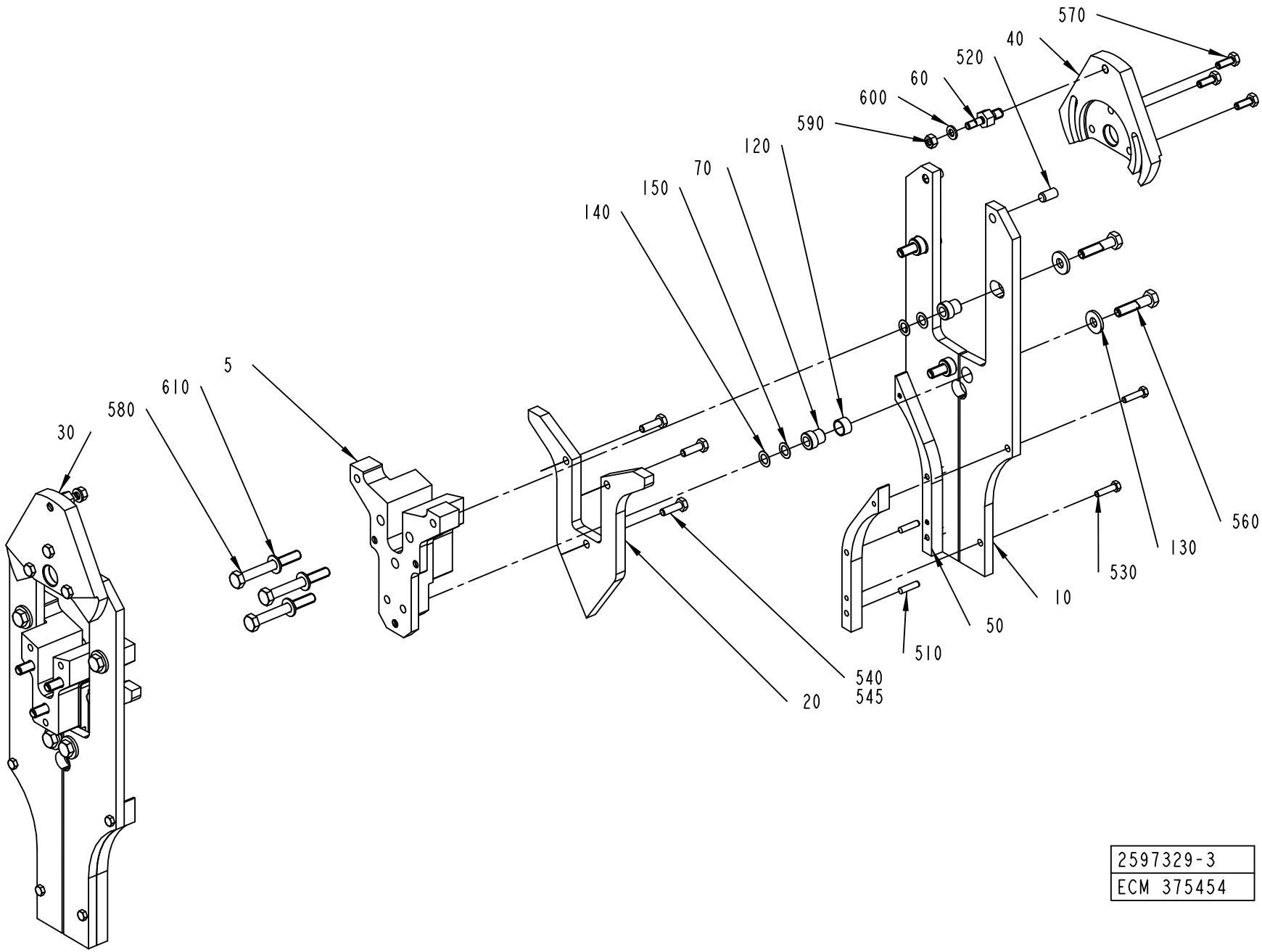

2597329-3
ECM 375454

Pos	Part No	UN	Qty	Description	Page No
TBA 1000S (Cont'd) (See drawing on page: 4-232)					
010	2533742-0000		4	RAIL BRACKET	
020	1348809-0000		2	CURVE	
030	2618378-0000		1	ECCENTRIC	
040	2618377-0000		1	ECCENTRIC	
050	1484251-0000		4	VOLUME CAM	
060	2624544-0000		2	PIVOT PIN	
070	2533736-0000		8	SLEEVE	
120	321120-0108		4	BEARING BUSH W/O FLANGE, 12X14X8 MM	
130	1487504-0000		8	WASHER	
140	1487505-0001		16	WASHER	
150	1487505-0002		16	WASHER	
520	311103-0399		4	PARALLEL PIN ISO 2338 8M6X16 A1	
530	312105-0331		8	SCREW M6S ISO 4017 M5X20 A480	
560	312105-0457		8	SCREW M6S ISO 4014 M8X35 A480	
570	312105-0368		6	SCREW M6S ISO 4017 M6X16 A480	
580	312105-0464		6	SCREW M6S ISO 4014 M8X65 A480	
590	312605-0316		2	HEXAGON NUT, M6M M6 A280	
600	315105-0153		2	WASHER BRB 6,4X12 RFR	
TBA 1000SQ (See drawing on page: 4-232)					
005	2624543-0000		2	SPACER	
010	2533744-0000		4	RAIL BRACKET	
020	2501851-0000		2	CURVE	
030	2618378-0000		1	ECCENTRIC	
040	2618377-0000		1	ECCENTRIC	
050	1499594-0000		4	VOLUME CAM	
060	2624544-0000		2	PIVOT PIN	
070	2533736-0000		8	SLEEVE	
120	321120-0108		4	BEARING BUSH W/O FLANGE, 12X14X8 MM	
130	1487504-0000		8	WASHER	
140	1487505-0001		16	WASHER	
150	1487505-0002		16	WASHER	
520	311103-0399		4	PARALLEL PIN ISO 2338 8M6X16 A1	
530	312105-0331		8	SCREW M6S ISO 4017 M5X20 A480	
560	312105-0457		8	SCREW M6S ISO 4014 M8X35 A480	
570	312105-0368		6	SCREW M6S ISO 4017 M6X16 A480	
580	312105-0464		6	SCREW M6S ISO 4014 M8X65 A480	
590	312605-0316		2	HEXAGON NUT, M6M M6 A280	
600	315105-0153		2	WASHER BRB 6,4X12 RFR	
TBA 1400B (See drawing on page: 4-236)					
005	2764048-0000		2	SPACER	
010	2588300-0000		4	RAIL BRACKET	
020	2771441-0000		2	CURVE	
030	2599739-0000		1	ECCENTRIC	
040	2599738-0000		1	ECCENTRIC	
050	2764049-0000		2	VOLUME CAM	
055	2764050-0000		2	VOLUME CAM	
060	2535443-0000		2	PIVOT PIN	
070	2613764-0000		8	SLEEVE	
080	2774452-0000		6	SPACER	
130	2614372-0000		8	SLEEVE	
140	2614376-0001		32	WASHER	
150	2614376-0002		32	WASHER	
520	311103-0402		4	PARALLEL PIN ISO 2338 8M6X22 A1	
530	312105-0329		8	SCREW M6S ISO 4017 M5X16 A480	
545	90157-0021		1	LOCKING FLUID LOCTITE 270	
560	312105-0455		8	SCREW M6S ISO 4017 M8X30 A480	
570	312105-0370		6	SCREW M6S ISO 4017 M6X20 A480	
580	312105-0455		6	SCREW M6S ISO 4017 M8X30 A480	
590	312605-0312		2	HEXAGON NUT, M6M M4 A280	
TBA 1500S (See drawing on page: 4-232)					
005	2633438-0000		2	SPACER	
010	2533737-0000		4	RAIL BRACKET	
020	1349741-0000		2	CURVE	
030	2618378-0000		1	ECCENTRIC	
040	2618377-0000		1	ECCENTRIC	
050	1349744-0000		4	VOLUME CAM	
060	2624544-0000		2	PIVOT PIN	
070	2533736-0000		8	SLEEVE	
120	321120-0108		4	BEARING BUSH W/O FLANGE, 12X14X8 MM	
130	1487504-0000		8	WASHER	
140	1487505-0001		16	WASHER	
150	1487505-0002		16	WASHER	
520	311103-0399		4	PARALLEL PIN ISO 2338 8M6X16 A1	
530	312105-0331		8	SCREW M6S ISO 4017 M5X20 A480	
560	312105-0457		8	SCREW M6S ISO 4014 M8X35 A480	
570	312105-0368		6	SCREW M6S ISO 4017 M6X16 A480	
580	312105-0464		6	SCREW M6S ISO 4014 M8X65 A480	
590	312605-0316		2	HEXAGON NUT, M6M M6 A280	
600	315105-0153		2	WASHER BRB 6,4X12 RFR	
TBA 1890S QC, TBA 2000S QC (See drawing on page: 4-230)					
005	2594887-0000		2	SPACER	
010	2588300-0000		4	RAIL BRACKET	
020	2588301-0000		2	CURVE	

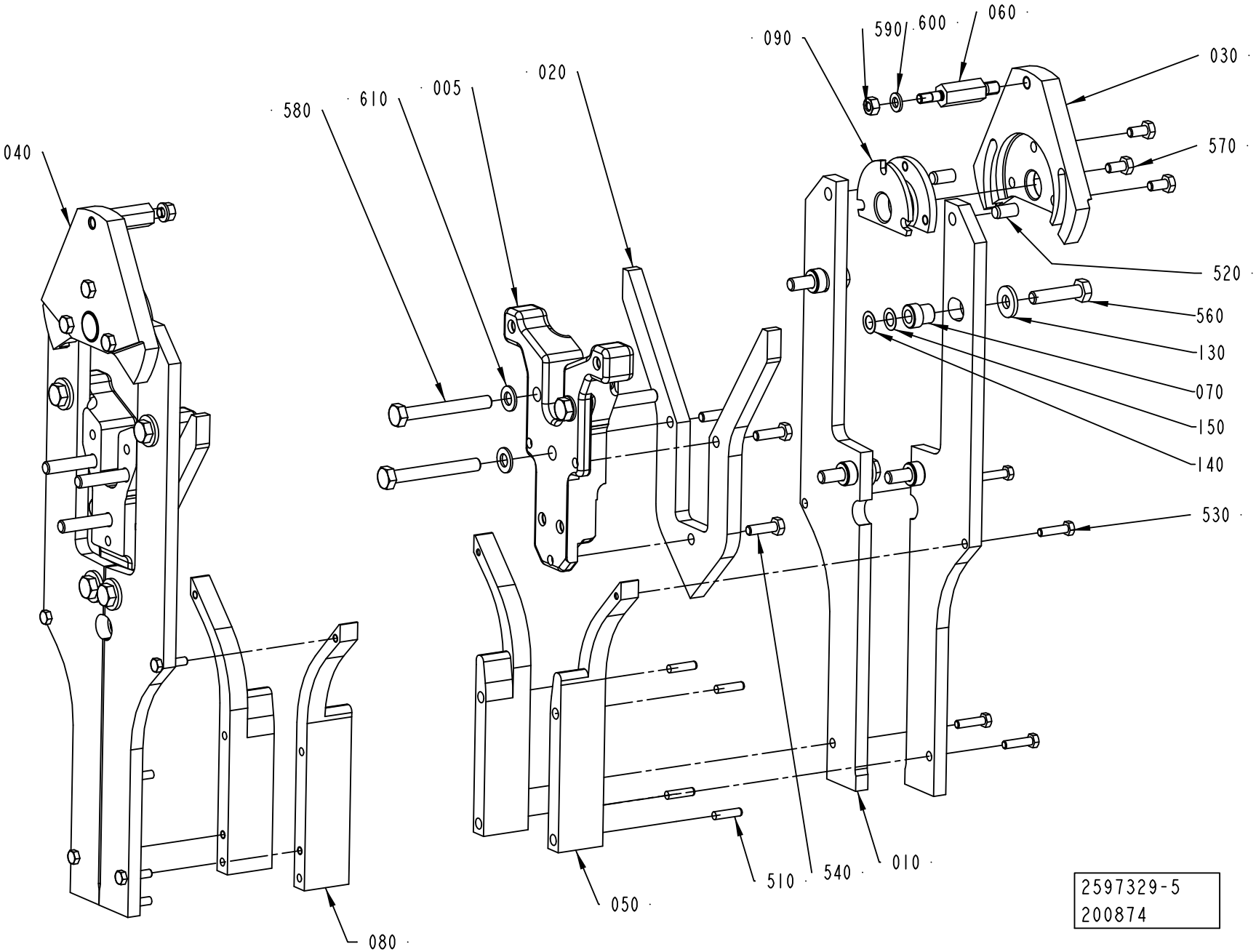
040
580
610
005
020
090
590
600
060
030
570
520
560
130
070
150
140
530
080
050
510
540
010
2597329-5
200874

ECM: 375460 - 20090102
Group number: 2597329-0100
Assembly Drawing: 2597329-5_1_AA

This list covers pages from 4-230 to 4-241

Pos	Part No	UN	Qty	Description	Page No
TBA 1890S QC, TBA 2000S QC (Cont'd) (See drawing on page: 4-230)					
030	2599739-0000		1	ECCENTRIC	
040	2599738-0000		1	ECCENTRIC	
050	2588302-0000		4	VOLUME CAM	
060	2535443-0000		2	PIVOT PIN	
070	2613764-0000		8	SLEEVE	
130	2614372-0000		8	SLEEVE	
140	2614376-0001		32	WASHER	
150	2614376-0002		32	WASHER	
520	311103-0402		4	PARALLEL PIN ISO 2338 8M6X22 A1	
530	312105-0329		8	SCREW M6S ISO 4017 M5X16 A480	
545	90157-0021		1	LOCKING FLUID LOCTITE 270	
560	312105-0455		8	SCREW M6S ISO 4017 M8X30 A480	
570	312105-0370		6	SCREW M6S ISO 4017 M6X20 A480	
580	312105-0455		6	SCREW M6S ISO 4017 M8X30 A480	
590	312605-0312		2	HEXAGON NUT, M6M M4 A280	
TGA 1000SQ, TGA 0750SQ, TGA 0500SQ (See drawing on page: 4-240)					
005	2612750-0000		2	SPACER	
010	2854053-0000		2	RAIL BRACKET	
015	2854052-0000		2	RAIL BRACKET	
030	2618378-0000		1	ECCENTRIC	
040	2618377-0000		1	ECCENTRIC	
050	2896790-0000		2	CAM	
055	2896791-0000		2	CAM	
060	2624544-0000		2	PIVOT PIN	
070	2927281-0000		8	SLEEVE	
100	2867643-0000		2	BRACKET	
110	2854056-0000		2	BRACKET	
130	2614372-0000		8	SLEEVE	
140	2614376-0001		16	WASHER	
150	2614376-0002		16	WASHER	
530	312115-0327		12	SCREW ISO4762 M5X12 A4 80	
560	312105-0457		8	SCREW M6S ISO 4014 M8X35 A480	
570	312105-0368		6	SCREW M6S ISO 4017 M6X16 A480	
580	312105-0460		6	SCREW M6S ISO 4014 M8X45 A480	
590	312605-0316		2	HEXAGON NUT, M6M M6 A280	
620	312115-0364		8	SCREW ISO4762 M6X10 A4 80	
TPA 0330SQ (See drawing on page: 4-232)					
005	2628598-0000		2	SPACER	
010	2533747-0000		4	RAIL BRACKET	
020	1538264-0000		2	CURVE	
030	2606891-0000		1	ECCENTRIC	
040	2606892-0000		1	ECCENTRIC	
050	1538265-0000		4	VOLUME CAM	
060	2624544-0000		2	PIVOT PIN	
070	2533736-0000		8	SLEEVE	
120	321120-0108		4	BEARING BUSH W/O FLANGE, 12X14X8 MM	
130	1487504-0000		8	WASHER	
140	1487505-0001		16	WASHER	
150	1487505-0002		16	WASHER	
520	311103-0399		4	PARALLEL PIN ISO 2338 8M6X16 A1	
530	312105-0331		8	SCREW M6S ISO 4017 M5X20 A480	
560	312105-0457		8	SCREW M6S ISO 4014 M8X35 A480	
570	312105-0368		6	SCREW M6S ISO 4017 M6X16 A480	
580	312105-0464		6	SCREW M6S ISO 4014 M8X65 A480	
590	312605-0316		2	HEXAGON NUT, M6M M6 A280	
600	315105-0153		2	WASHER BRB 6,4X12 RFR	
TPA 0500SQ (See drawing on page: 4-232)					
005	2624543-0000		2	SPACER	
010	2582020-0000		4	RAIL BRACKET	
020	2697307-0000		2	CURVE	
030	2618378-0000		1	ECCENTRIC	
040	2618377-0000		1	ECCENTRIC	
050	1549843-0000		4	VOLUME CAM	
060	2624544-0000		2	PIVOT PIN	
070	2533736-0000		8	SLEEVE	
120	321120-0108		4	BEARING BUSH W/O FLANGE, 12X14X8 MM	
130	1487504-0000		8	WASHER	
140	1487505-0001		16	WASHER	
150	1487505-0002		16	WASHER	
520	311103-0399		4	PARALLEL PIN ISO 2338 8M6X16 A1	
530	312105-0331		8	SCREW M6S ISO 4017 M5X20 A480	
560	312105-0457		8	SCREW M6S ISO 4014 M8X35 A480	
570	312105-0368		6	SCREW M6S ISO 4017 M6X16 A480	
580	312105-0464		6	SCREW M6S ISO 4014 M8X65 A480	
590	312605-0316		2	HEXAGON NUT, M6M M6 A280	
600	315105-0153		2	WASHER BRB 6,4X12 RFR	
TPA 1000SQ NOQC (See drawing on page: 4-232)					
005	2633438-0000		2	SPACER	
010	2575631-0000		4	RAIL BRACKET	
020	2564683-0000		2	CURVE	
030	2618378-0000		1	ECCENTRIC	
040	2618377-0000		1	ECCENTRIC	
050	1523490-0000		4	VOLUME BULGE	

Machine Type | Group Description | Used-In | Group Number | Page No

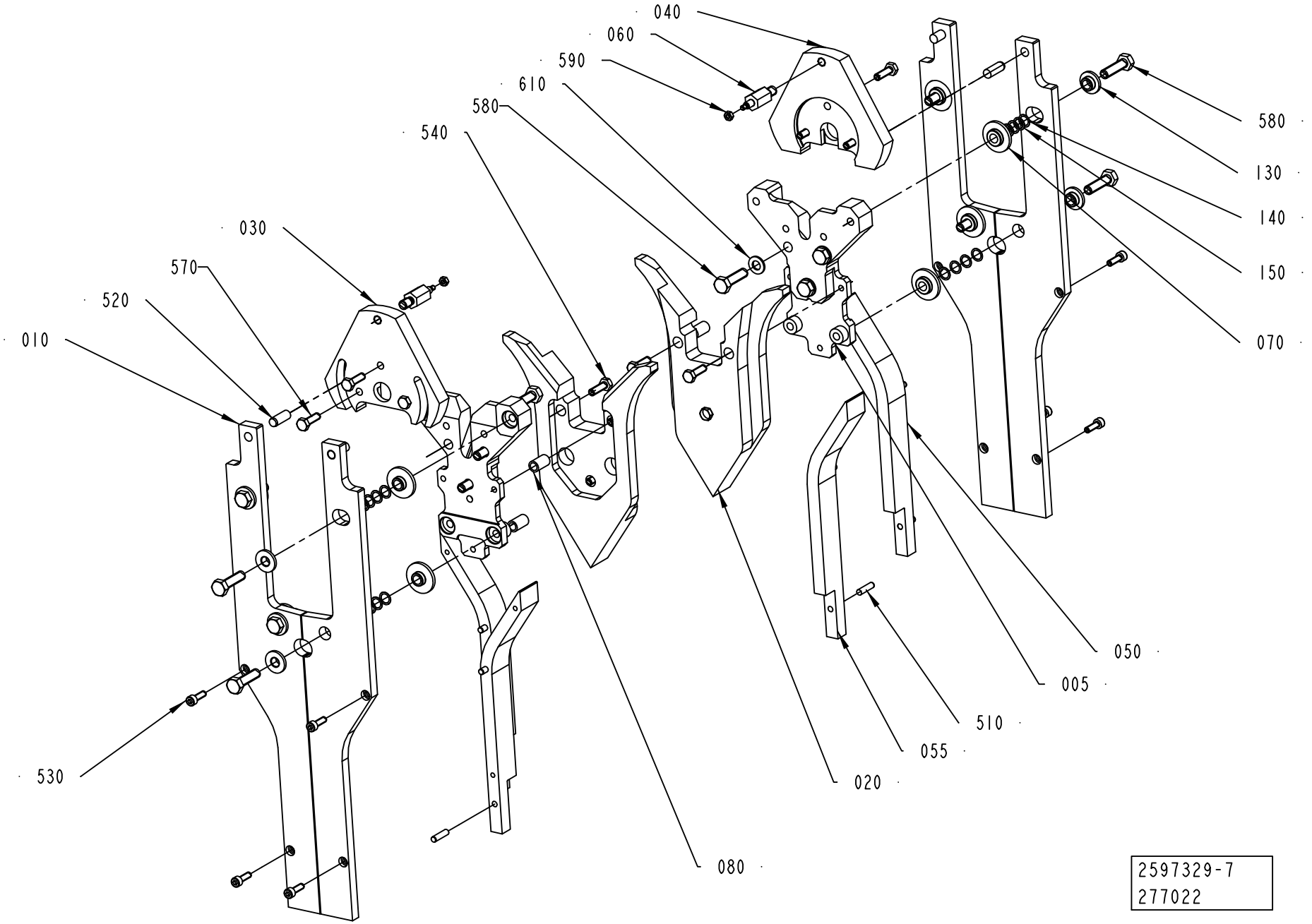
040
060
590
610
580
540
030
570
520
010
530
080
020
055
510
005
050
070
150
140
130
580
2597329-7
277022

Pos	Part No	UN	Qty	Description	Page No
TPA 1000SQ NOQC (Cont'd) (See drawing on page: 4-232)					
060	2624544-0000		2	PIVOT PIN	
070	2533736-0000		8	SLEEVE	
120	321120-0108		4	BEARING BUSH W/O FLANGE, 12X14X8 MM	
130	1487504-0000		8	WASHER	
140	1487505-0001		16	WASHER	
150	1487505-0002		16	WASHER	
520	311103-0399		4	PARALLEL PIN ISO 2338 8M6X16 A1	
530	312105-0331		8	SCREW M6S ISO 4017 M5X20 A480	
560	312105-0457		8	SCREW M6S ISO 4014 M8X35 A480	
570	312105-0368		6	SCREW M6S ISO 4017 M6X16 A480	
580	312105-0464		6	SCREW M6S ISO 4014 M8X65 A480	
590	312605-0316		2	HEXAGON NUT, M6M M6 A280	
600	315105-0153		2	WASHER BRB 6,4X12 RFR	
TPA 1000SQ QC, TPA 0750SQ QC (See drawing on page: 4-234)					
005	2658251-0000		2	SPACER	
010	2658252-0000		4	RAIL BRACKET	
020	2658253-0000		2	CURVE	
030	2606891-0000		1	ECCENTRIC	
040	2606892-0000		1	ECCENTRIC	
050	2662640-0000		2	VOLUME CAM	
060	2618302-0000		2	PIVOT PIN	
070	2533736-0000		8	SLEEVE	
080	2662641-0000		2	VOLUME CAM	
090	2618259-0000		2	SPACER	
120	321120-0108		4	BEARING BUSH W/O FLANGE, 12X14X8 MM	
130	1487504-0000		8	WASHER	
140	1487505-0001		16	WASHER	
150	1487505-0002		16	WASHER	
520	311103-0399		4	PARALLEL PIN ISO 2338 8M6X16 A1	
530	312105-0331		8	SCREW M6S ISO 4017 M5X20 A480	
560	312105-0457		8	SCREW M6S ISO 4014 M8X35 A480	
570	312105-0366		6	SCREW M6S ISO 4017 M6X12 A480	
580	312105-0464		6	SCREW M6S ISO 4014 M8X65 A480	
590	312605-0316		2	HEXAGON NUT, M6M M6 A280	
600	315105-0153		2	WASHER BRB 6,4X12 RFR	
Common Parts					
510	311103-0310		8	PARALLEL PIN ISO 2338 5M6X20 A1	
540	312105-0370		6	SCREW M6S ISO 4017 M6X20 A480	
610	315105-0165		6	WASHER BRB 8,4X16 RFR	

Pos	Part No	UN	Qty	Description	Page No

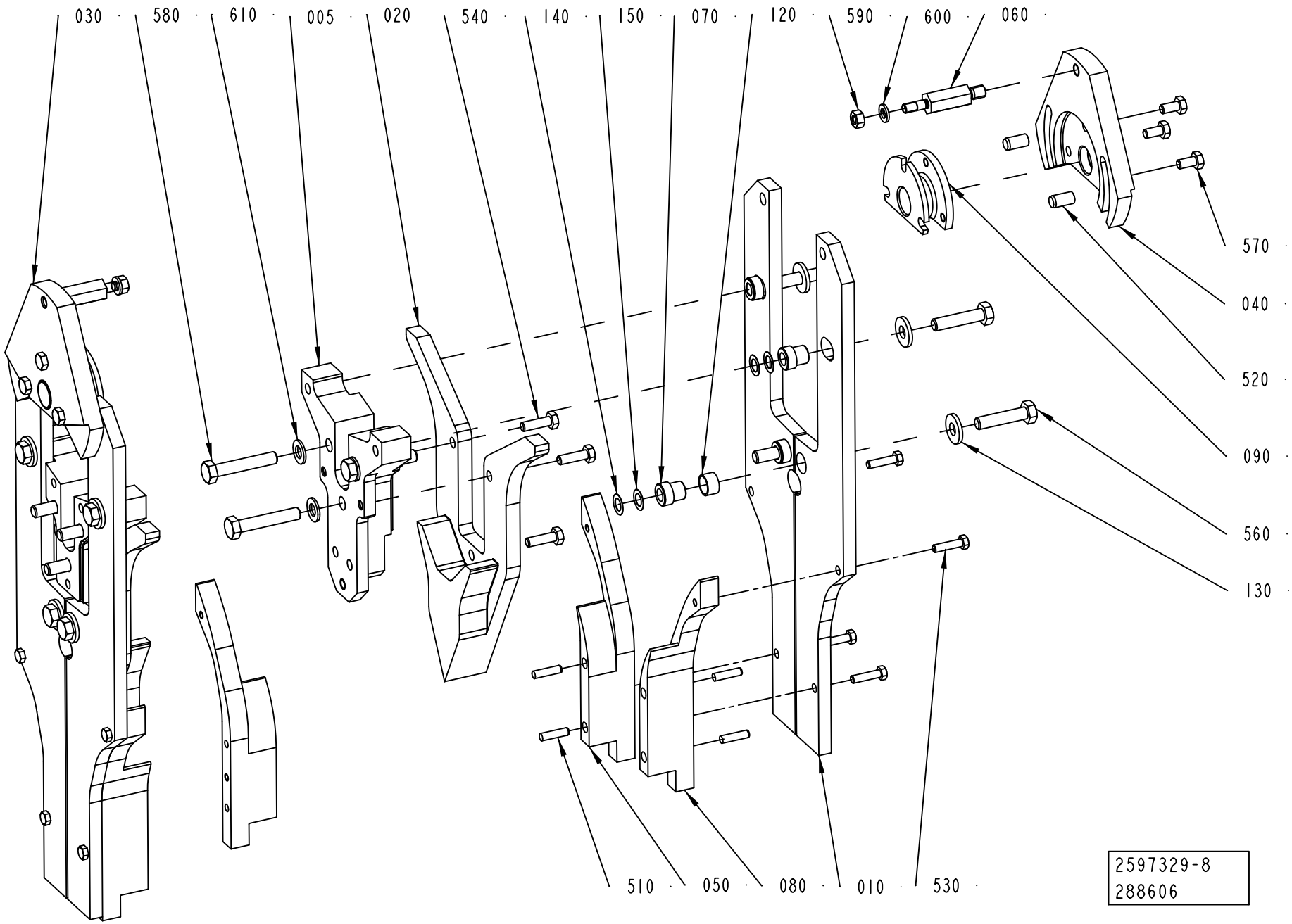
030
580
610
005
020
540
140
150
070
120
590
600
060
570
040
520
090
560
130
510
050
080
010
530
2597329-8
288606

Pos	Part No	UN	Qty	Description	Page No
SEE PREVIOUS LISTS PAGES: 4-231, 4-233, 4-235, 4-237.					

Pos	Part No	UN	Qty	Description	Page No

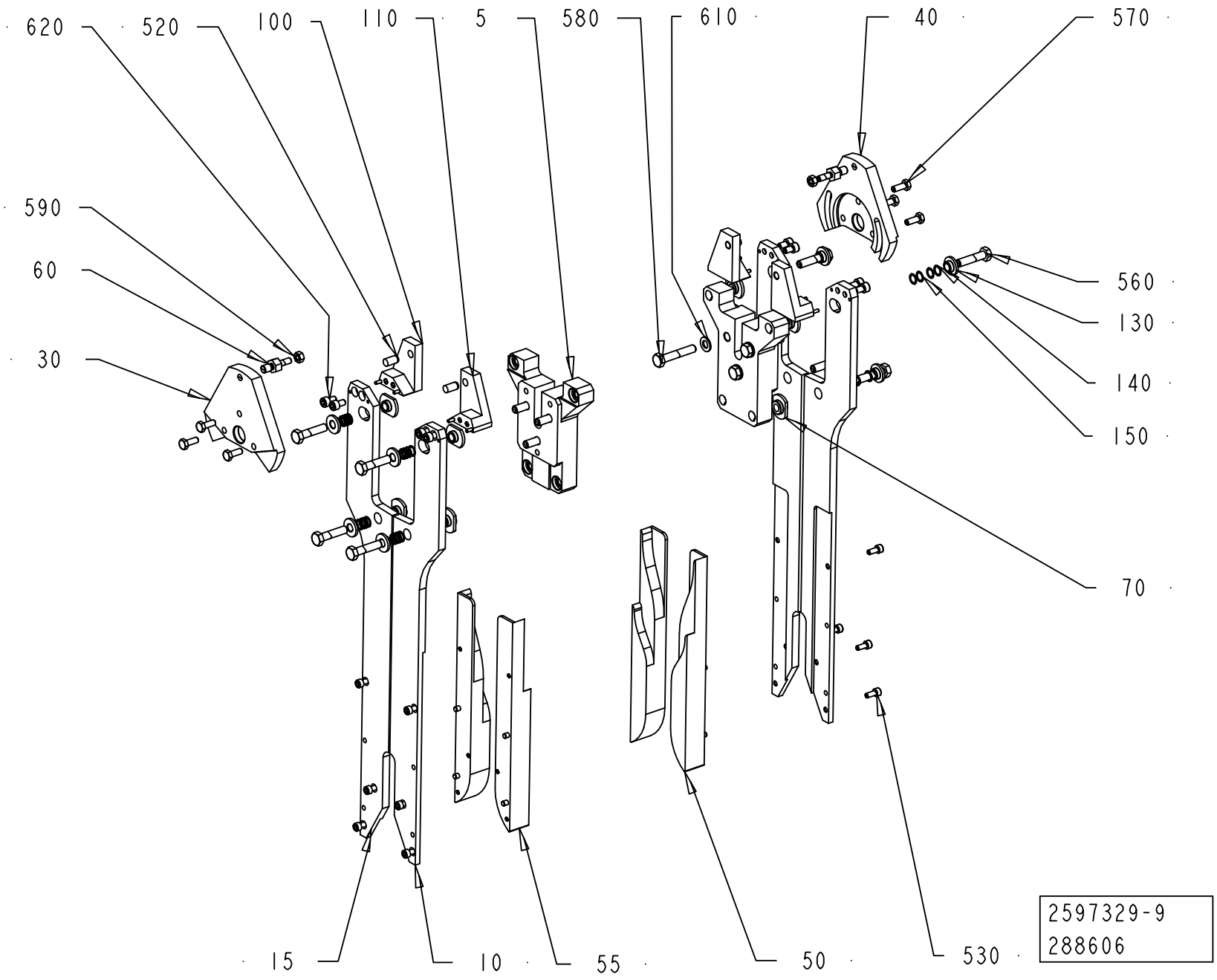
620
520
100
110
5
580
610
40
570
590
60
30
560
130
140
150
70
15
10
55
50
530
2597329-9
288606

Pos	Part No	UN	Qty	Description	Page No
SEE PREVIOUS LISTS PAGES: 4-231, 4-233, 4-235, 4-237.					

Pos	Part No	UN	Qty	Description	Page No

SUPPORT ROLLER

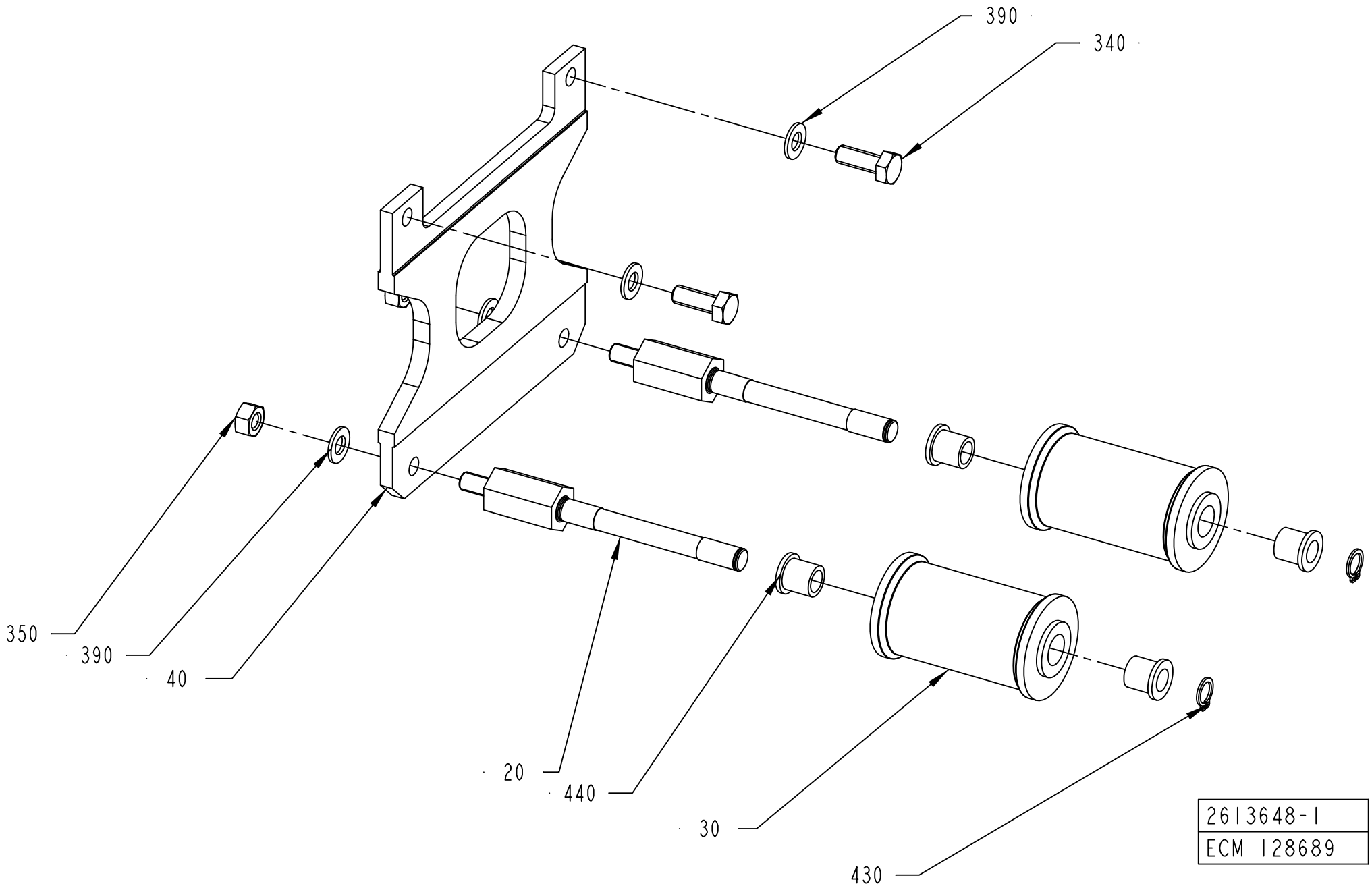

ECM: 363023 - 20081002
Group number: 2613648-0100
Assembly Drawing: 2613648-1_1_AA

This list covers pages from 4-242 to 4-245

Pos	Part No	UN	Qty	Description	Page No
TBA 1000B NOQC STDA7 (See drawing on page: 4-244)					
020	2619198-0000		2	SHAFT	
030	2767478-0001		2	ROLLER	
040	2623783-0000		1	PLATE	
350	312605-0318		2	HEXAGON NUT, M6M M8 A280	
390	315105-0165		4	WASHER BRB 8,4X16 RFR	
430	312705-0316		2	NUT HEX. DOMED CAP MHM-6 M6 A280	
440	90240-0180		4	FLANGE BUSHING 10X14X15MM	
450	315125-0153		2	WASHER TBRSB 6,4X22X4 A4	
TBA 1000S NOMOLDEDCAP (See drawing on page: 4-242)					
020	2619198-0000		2	SHAFT	
030	569058-0000		2	SUPPORT ROLLER	
040	2623783-0000		1	PLATE	
350	312605-0318		2	HEXAGON NUT, M6M M8 A280	
390	315105-0165		4	WASHER BRB 8,4X16 RFR	
430	312705-0316		2	NUT HEX. DOMED CAP MHM-6 M6 A280	
440	90240-0180		4	FLANGE BUSHING 10X14X15MM	
450	315125-0153		2	WASHER TBRSB 6,4X22X4 A4	
TBA 1000S STDA7, TBA 1000S LIGHTCAP (See drawing on page: 4-244)					
020	2619198-0000		2	SHAFT	
030	2767478-0002		2	ROLLER	
040	2623783-0000		1	PLATE	
350	312605-0318		2	HEXAGON NUT, M6M M8 A280	
390	315105-0165		4	WASHER BRB 8,4X16 RFR	
430	312705-0316		2	NUT HEX. DOMED CAP MHM-6 M6 A280	
440	90240-0180		4	FLANGE BUSHING 10X14X15MM	
450	315125-0153		2	WASHER TBRSB 6,4X22X4 A4	
TBA 1500S (See drawing on page: 4-242)					
020	2648846-0000		2	SHAFT	
030	560122-0000		2	SUPPORT ROLLER	
040	2648847-0000		1	PLATE	
390	315105-0165		2	WASHER BRB 8,4X16 RFR	
430	312705-0316		2	NUT HEX. DOMED CAP MHM-6 M6 A280	
440	90240-0180		4	FLANGE BUSHING 10X14X15MM	
450	315125-0153		2	WASHER TBRSB 6,4X22X4 A4	
TBA 1890S QC, TBA 2000S QC, TBA 1400B (See drawing on page: 4-242)					
020	2650812-0000		2	SHAFT	
030	2602655-0000		2	ROLLER	
040	2652892-0000		1	PLATE	
350	312605-0318		2	HEXAGON NUT, M6M M8 A280	
390	315105-0165		4	WASHER BRB 8,4X16 RFR	
430	312705-0316		2	NUT HEX. DOMED CAP MHM-6 M6 A280	
440	90240-0180		4	FLANGE BUSHING 10X14X15MM	
450	315125-0153		2	WASHER TBRSB 6,4X22X4 A4	
TGA 1000SQ, TGA 0750SQ, TGA 0500SQ (See drawing on page: 4-242)					
020	2698625-0000		2	SHAFT	
030	2677383-0000		2	ROLLER	
040	2698626-0000		1	PLATE	
390	315105-0165		2	WASHER BRB 8,4X16 RFR	
430	312705-0316		2	NUT HEX. DOMED CAP MHM-6 M6 A280	
440	90240-0180		4	FLANGE BUSHING 10X14X15MM	
450	315125-0153		2	WASHER TBRSB 6,4X22X4 A4	
TPA 0200SQ QC, TPA 0250SQ QC (See drawing on page: 4-242)					
020	2646345-0000		2	SHAFT	
030	978760-0000		2	ROLLER TBA200SL	
040	2674323-0000		1	PLATE	
350	312605-0318		2	HEXAGON NUT, M6M M8 A280	
390	315105-0165		4	WASHER BRB 8,4X16 RFR	
TPA 0330SQ (See drawing on page: 4-242)					
020	2619319-0000		2	SHAFT	
030	929355-0000		2	ROLLER TPA 330	
040	2664779-0000		1	PLATE	
350	312605-0318		2	HEXAGON NUT, M6M M8 A280	
390	315105-0165		4	WASHER BRB 8,4X16 RFR	
430	312705-0316		2	NUT HEX. DOMED CAP MHM-6 M6 A280	
440	90240-0180		4	FLANGE BUSHING 10X14X15MM	
450	315125-0153		2	WASHER TBRSB 6,4X22X4 A4	
TPA 1000SQ NOQC, TPA 1000SQ QC, TPA 0750SQ QC (See drawing on page: 4-242)					
020	2648846-0000		2	SHAFT	
030	1524421-0000		2	ROLLER	
040	2642097-0000		1	PLATE	
390	315105-0165		2	WASHER BRB 8,4X16 RFR	
430	312705-0316		2	NUT HEX. DOMED CAP MHM-6 M6 A280	
440	90240-0180		4	FLANGE BUSHING 10X14X15MM	
450	315125-0153		2	WASHER TBRSB 6,4X22X4 A4	
TPA 500SQ LIGHTCAP (See drawing on page: 4-242)					
020	2619198-0000		2	SHAFT	
030	2959397-0002		2	ROLLER	
040	2664780-0000		1	PLATE	
350	312605-0318		2	HEXAGON NUT, M6M M8 A280	
390	315105-0165		4	WASHER BRB 8,4X16 RFR	
430	312705-0316		2	NUT HEX. DOMED CAP MHM-6 M6 A280	
440	90240-0180		4	FLANGE BUSHING 10X14X15MM	
450	315125-0153		2	WASHER TBRSB 6,4X22X4 A4	

Machine Type | Group Description | Used-In | Group Number | Page No

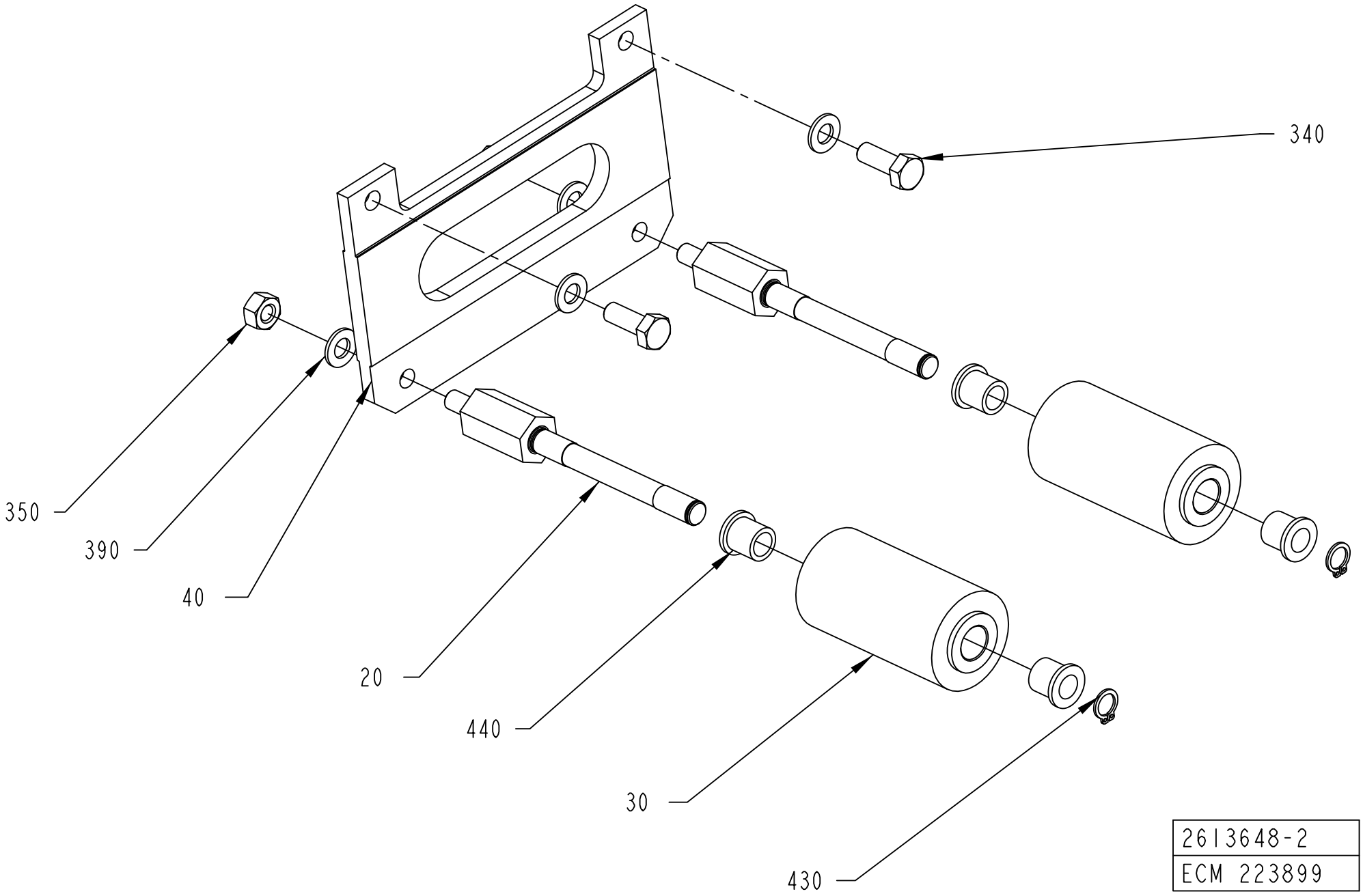
340
350
390
40
20
440
30
430
2613648-2
ECM 223899

ECM: 363023 - 20081002
Group number: 2613648-0100
Assembly Drawing: 2613648-2_1_AB

This list covers pages from 4-242 to 4-245

Pos	Part No	UN	Qty	Description	Page No
TPA 500SQ NOMOLDEDCAP (Cont'd) (See drawing on page: 4-242)					
020	2619198-0000		2	SHAFT	
030	2688917-0000		2	ROLLER	
040	2664780-0000		1	PLATE	
350	312605-0318		2	HEXAGON NUT, M6M M8 A280	
390	315105-0165		4	WASHER BRB 8,4X16 RFR	
430	312705-0316		2	NUT HEX. DOMED CAP MHM-6 M6 A280	
440	90240-0180		4	FLANGE BUSHING 10X14X15MM	
450	315125-0153		2	WASHER TBRSB 6,4X22X4 A4	
TBA 0200B QC, TBA 0330S QC, TBA 0250B QC (See drawing on page: 4-242)					
020	2646345-0000		2	SHAFT	
030	978757-0000		2	ROLLER 180-284ML	
040	2646344-0000		1	PLATE	
350	312605-0318		2	HEXAGON NUT, M6M M8 A280	
390	315105-0165		4	WASHER BRB 8,4X16 RFR	
430	312705-0316		2	NUT HEX. DOMED CAP MHM-6 M6 A280	
440	90240-0180		4	FLANGE BUSHING 10X14X15MM	
450	315125-0153		2	WASHER TBRSB 6,4X22X4 A4	
TBA 0200M QC, TBA 0250S QC (See drawing on page: 4-242)					
020	2649441-0000		2	SHAFT	
030	2530124-0000		2	ROLLER	
040	2649442-0000		1	PLATE	
350	312605-0318		2	HEXAGON NUT, M6M M8 A280	
390	315105-0165		4	WASHER BRB 8,4X16 RFR	
430	312705-0316		2	NUT HEX. DOMED CAP MHM-6 M6 A280	
440	90240-0180		4	FLANGE BUSHING 10X14X15MM	
450	315125-0153		2	WASHER TBRSB 6,4X22X4 A4	
TBA 0200S					
020	2632818-0000		2	SHAFT	
030	978760-0000		2	ROLLER TBA200SL	
040	2632817-0000		1	PLATE	
350	312605-0318		2	HEXAGON NUT, M6M M8 A280	
390	315105-0165		4	WASHER BRB 8,4X16 RFR	
430	312705-0316		2	NUT HEX. DOMED CAP MHM-6 M6 A280	
440	90240-0180		4	FLANGE BUSHING 10X14X15MM	
450	315125-0153		2	WASHER TBRSB 6,4X22X4 A4	
TBA 0200SQ QC, TBA 0250SQ QC (See drawing on page: 4-242)					
020	2646345-0000		2	SHAFT	
030	2696806-0000		2	ROLLER	
040	2681244-0000		1	PLATE	
350	312605-0318		2	HEXAGON NUT, M6M M8 A280	
390	315105-0165		4	WASHER BRB 8,4X16 RFR	
430	312705-0316		2	NUT HEX. DOMED CAP MHM-6 M6 A280	
440	90240-0180		4	FLANGE BUSHING 10X14X15MM	
450	315125-0153		2	WASHER TBRSB 6,4X22X4 A4	
TBA 0500B QC, TBA 1000B QC (See drawing on page: 4-242)					
020	2619198-0000		2	SHAFT	
030	2619199-0000		2	ROLLER	
040	2619200-0000		1	PLATE	
350	312605-0318		2	HEXAGON NUT, M6M M8 A280	
390	315105-0165		4	WASHER BRB 8,4X16 RFR	
430	312705-0316		2	NUT HEX. DOMED CAP MHM-6 M6 A280	
440	90240-0180		4	FLANGE BUSHING 10X14X15MM	
450	315125-0153		2	WASHER TBRSB 6,4X22X4 A4	
TBA 0500S (See drawing on page: 4-242)					
020	2619198-0000		2	SHAFT	
030	1512484-0000		2	ROLLER	
040	2664780-0000		1	PLATE	
350	312605-0318		2	HEXAGON NUT, M6M M8 A280	
390	315105-0165		6	WASHER BRB 8,4X16 RFR	
430	312705-0316		2	NUT HEX. DOMED CAP MHM-6 M6 A280	
440	90240-0180		4	FLANGE BUSHING 10X14X15MM	
450	315125-0153		2	WASHER TBRSB 6,4X22X4 A4	
TBA 0500SQ, TBA 1000SQ (See drawing on page: 4-242)					
020	2619198-0000		2	SHAFT	
030	1499678-0000		2	ROLLER	
040	2623783-0000		1	PLATE	
350	312605-0318		2	HEXAGON NUT, M6M M8 A280	
390	315105-0165		4	WASHER BRB 8,4X16 RFR	
430	312705-0316		2	NUT HEX. DOMED CAP MHM-6 M6 A280	
440	90240-0180		4	FLANGE BUSHING 10X14X15MM	
450	315125-0153		2	WASHER TBRSB 6,4X22X4 A4	
TBA 1000B NOQC NOMOLDEDCAP (See drawing on page: 4-242)					
020	2619198-0000		2	SHAFT	
030	560122-0000		2	SUPPORT ROLLER	
040	2623783-0000		1	PLATE	
350	312605-0318		2	HEXAGON NUT, M6M M8 A280	
390	315105-0165		4	WASHER BRB 8,4X16 RFR	
430	312705-0316		2	NUT HEX. DOMED CAP MHM-6 M6 A280	
440	90240-0180		4	FLANGE BUSHING 10X14X15MM	
450	315125-0153		2	WASHER TBRSB 6,4X22X4 A4	
Common Parts					
340	312105-0452		2	SCREW M6S ISO 4017 M8X22 A480	

Machine Type	Group Description	Used-In	Group Number	Page No

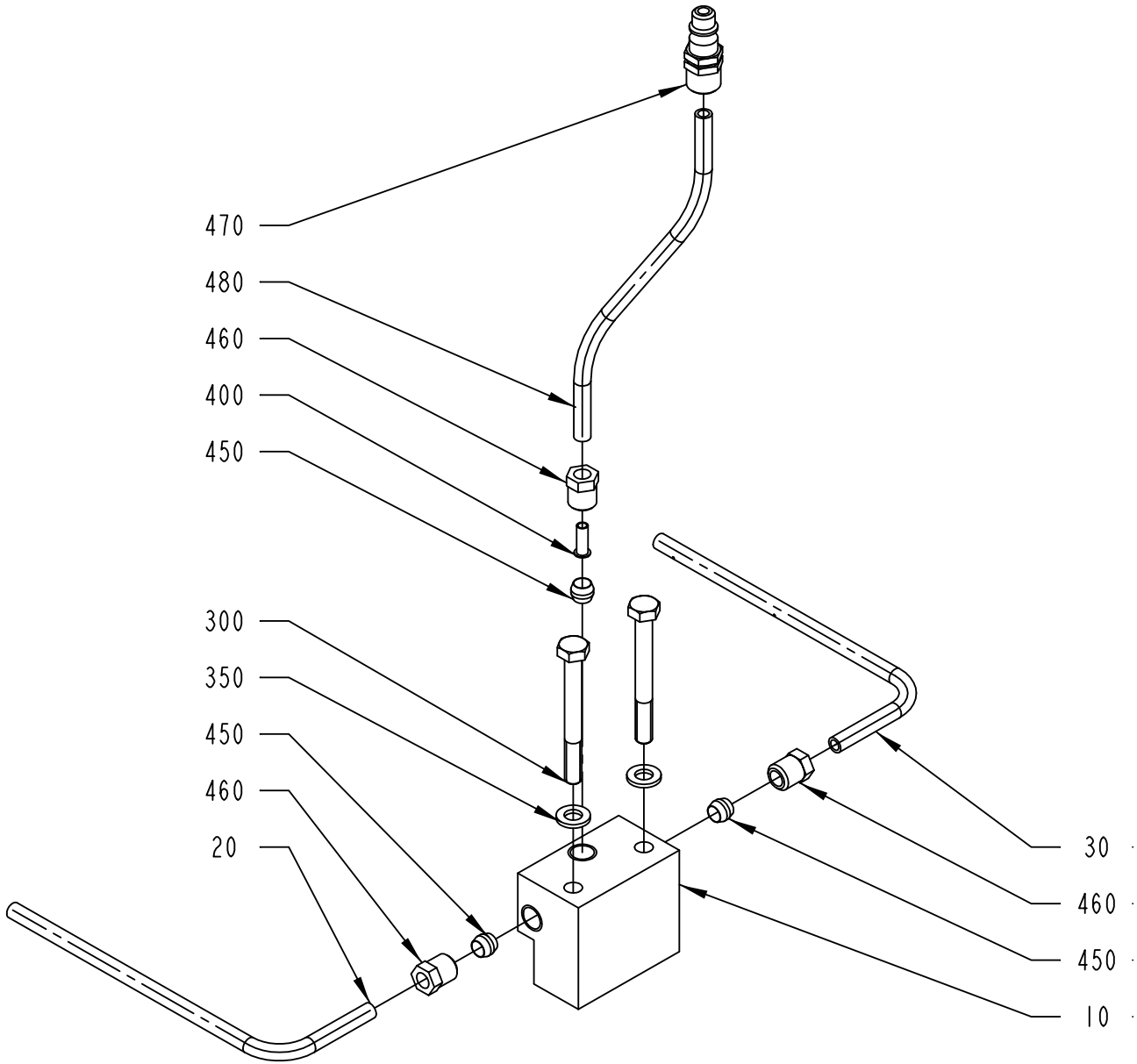
470
480
460
400
450
300
350
450
460
20
30
460
450
10
2556893-1
ECM 120277

ECM: 345082 - 20080701
Group number: 2556893-0100
Assembly Drawing: 2556893-1_1_AA

Pos	Part No	UN	Qty	Description	Page No
TBA 0200M, TBA 0200B, TBA 0200SQ, TBA 0200S, TBA 0250S, TBA 0250B, TBA 0330S, TBA 0500S, TPA 0330SQ, TPA 0250SQ, TPA 0200SQ, TPA 0500SQ, TBA 0250SQ					
020	2556894-0000		1	TUBE FLUSHING DEVICE	
030	2556895-0000		1	TUBE FLUSHING DEVICE	
TBA 0500SQ, TBA 0500B, TBA 1000B, TBA 1000SQ, TBA 1000S, TBA 1500S, TPA 1000SQ					
020	2532837-0000		1	TUBE FLUSHING DEVICE	
030	2532838-0000		1	TUBE FLUSHING DEVICE	
TBA 1890S, TBA 2000S, TBA 1400B					
020	2629240-0000		1	TUBE FLUSHING DEVICE	
030	2629239-0000		1	TUBE FLUSHING DEVICE	
TPA 0750SQ, TGA 1000SQ, TGA 0750SQ, TGA 0500SQ					
020	2658298-0000		1	TUBE FLUSHING DEVICE	
030	2658299-0000		1	TUBE FLUSHING DEVICE	
Common Parts					
010	2556615-0000		1	.PIPE CONNECTION	
300	312105-0381		2	SCREW M6S ISO 4014 M6X55 A480	
350	315105-0153		2	WASHER BRB 6,4X12 RFR	
400	342706-0130		1	ACCESSORIES, INSERT SLEEVE 6 MM	
450	90028-0022		3	CONE TUBE 6 MM	
460	90134-0055		3	BUSHING/NUT INLET/OUTLET 6 MM	
470	90163-0063		1	QUICK COUPLING, (M) 5450-6/4	
480	90166-0132	MM	1500	TUBE 6 MM PA,TRANSP.	

Pos	Part No	UN	Qty	Description	Page No

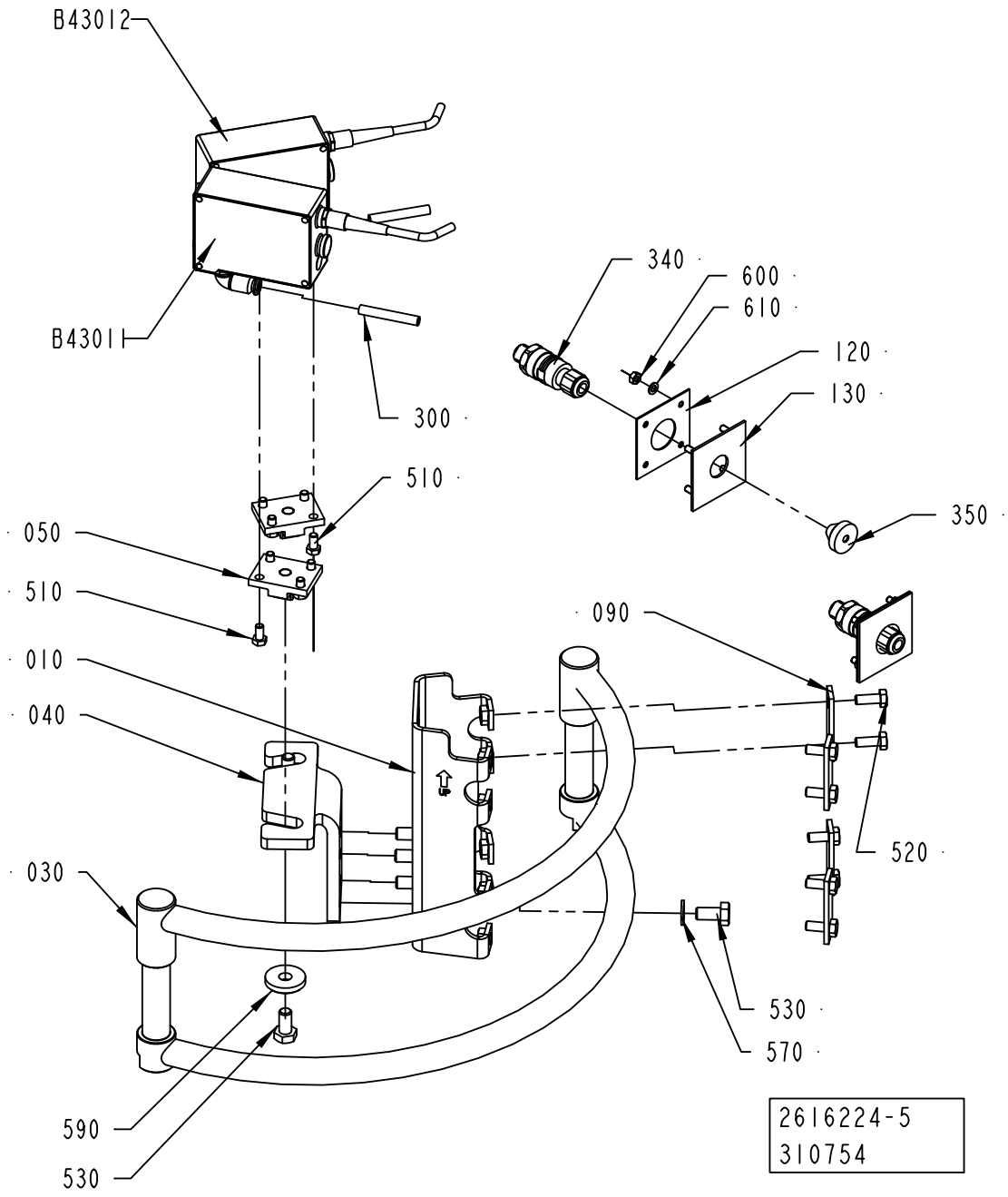
B43012
B43011
300
340
600
610
120
130
350
510
050
510
010
040
090
520
030
530
570
590
530
2616224-5
310754

ECM: 345373 - 20080701
Group number: 2616224-0200
Assembly Drawing: 2616224-5_1_AB

This list covers pages from 4-248 to 4-255

Pos	Part No	UN	Qty	Description	Page No
TPA 0330SQ (See drawing on page: 4-248)					
010	2715295-0000		1	BRACKET	
040	1254111-0000		1	BRACKET	
090	1036673-0000		4	WASHER	
120	2727703-0000		2	GASKET	
130	2878583-0000		2	PLATE	
340	90459-6570		2	CONNECTOR M12 5-POLES MALE, RSCN5/7	
350	90015-0020		2	LEAD-IN, TET5-7, E-1458016	
590	315125-0165		2	WASHER TBRSB 8,4X26X5 A4	
600	312605-0312		8	HEXAGON NUT, M6M M4 A280	
610	315105-0136		8	WASHER BRB 4,3X8 RFR	
TPA 0500SQ (See drawing on page: 4-252)					
010	2715295-0000		1	BRACKET	
040	1254111-0000		1	BRACKET	
090	1036673-0000		4	WASHER	
120	2727703-0000		2	GASKET	
130	2878583-0000		2	PLATE	
340	90459-6570		2	CONNECTOR M12 5-POLES MALE, RSCN5/7	
350	90015-0020		2	LEAD-IN, TET5-7, E-1458016	
590	315125-0165		2	WASHER TBRSB 8,4X26X5 A4	
600	312605-0312		8	HEXAGON NUT, M6M M4 A280	
610	315105-0136		8	WASHER BRB 4,3X8 RFR	
TBA 0200B, TBA 0250B, TBA 0330S (See drawing on page: 4-250)					
010	2715296-0000		1	BRACKET	
020	2655096-0000		1	SLIDE	
040	2655095-0000		1	BRACKET	
060	2655097-0000		1	KNOB	
070	2655098-0000		1	SHAFT	
080	90335-0024		1	COMP. SPRING 22250, 1,25X13,75X27	
090	1036673-0000		4	WASHER	
100	90287-0148		4	SCREW SPRINGLOAD. SLOTTED HEAD M5X12	
110	312318-0323		4	SCREW ISO4029 M5X8 A4	
120	2727703-0000		2	GASKET	
130	2878583-0000		2	PLATE	
340	90459-6570		2	CONNECTOR M12 5-POLES MALE, RSCN5/7	
350	90015-0020		2	LEAD-IN, TET5-7, E-1458016	
590	315125-0165		2	WASHER TBRSB 8,4X26X5 A4	
600	312605-0312		8	HEXAGON NUT, M6M M4 A280	
610	315105-0136		8	WASHER BRB 4,3X8 RFR	
TBA 0200M, TBA 0250S (See drawing on page: 4-250)					
010	2715296-0000		1	BRACKET	
020	2679885-0000		1	SLIDE	
040	2679884-0000		1	BRACKET	
060	2679886-0000		1	KNOB	
070	2655098-0000		1	SHAFT	
080	90335-0024		1	COMP. SPRING 22250, 1,25X13,75X27	
090	1036673-0000		4	WASHER	
100	90287-0148		4	SCREW SPRINGLOAD. SLOTTED HEAD M5X12	
110	312318-0323		4	SCREW ISO4029 M5X8 A4	
120	2727703-0000		2	GASKET	
130	2878583-0000		2	PLATE	
340	90459-6570		2	CONNECTOR M12 5-POLES MALE, RSCN5/7	
350	90015-0020		2	LEAD-IN, TET5-7, E-1458016	
600	312605-0312		8	HEXAGON NUT, M6M M4 A280	
610	315105-0136		8	WASHER BRB 4,3X8 RFR	
TBA 0200S (See drawing on page: 4-248)					
010	2715295-0000		1	BRACKET	
040	1254110-0000		1	BRACKET	
090	1036673-0000		4	WASHER	
120	2727703-0000		2	GASKET	
130	2878583-0000		2	PLATE	
340	90459-6570		2	CONNECTOR M12 5-POLES MALE, RSCN5/7	
350	90015-0020		2	LEAD-IN, TET5-7, E-1458016	
590	315125-0165		2	WASHER TBRSB 8,4X26X5 A4	
600	312605-0312		8	HEXAGON NUT, M6M M4 A280	
610	315105-0136		8	WASHER BRB 4,3X8 RFR	
TBA 0200SQ, TBA 0250SQ (See drawing on page: 4-254)					
010	2715296-0000		1	BRACKET	
020	2735474-0000		1	SLIDE	
040	2735473-0000		1	BRACKET	
060	2724929-0000		1	KNOB	
065	2724932-0000		1	NUT	
070	2724930-0000		1	SCREW	
080	90335-0024		1	COMP. SPRING 22250, 1,25X13,75X27	
090	1036673-0000		4	WASHER	
100	90287-0148		4	SCREW SPRINGLOAD. SLOTTED HEAD M5X12	
120	2727703-0000		2	GASKET	
130	2878583-0000		2	PLATE	
590	315125-0165		2	WASHER TBRSB 8,4X26X5 A4	
600	312605-0312		8	HEXAGON NUT, M6M M4 A280	
610	315105-0136		8	WASHER BRB 4,3X8 RFR	
TBA 0500B, TBA 1000B, TBA 1500S (See drawing on page: 4-248)					
010	2715295-0000		1	BRACKET	
040	1254109-0000		1	BRACKET	

Machine Type | Group Description | Used-In | Group Number | Page No

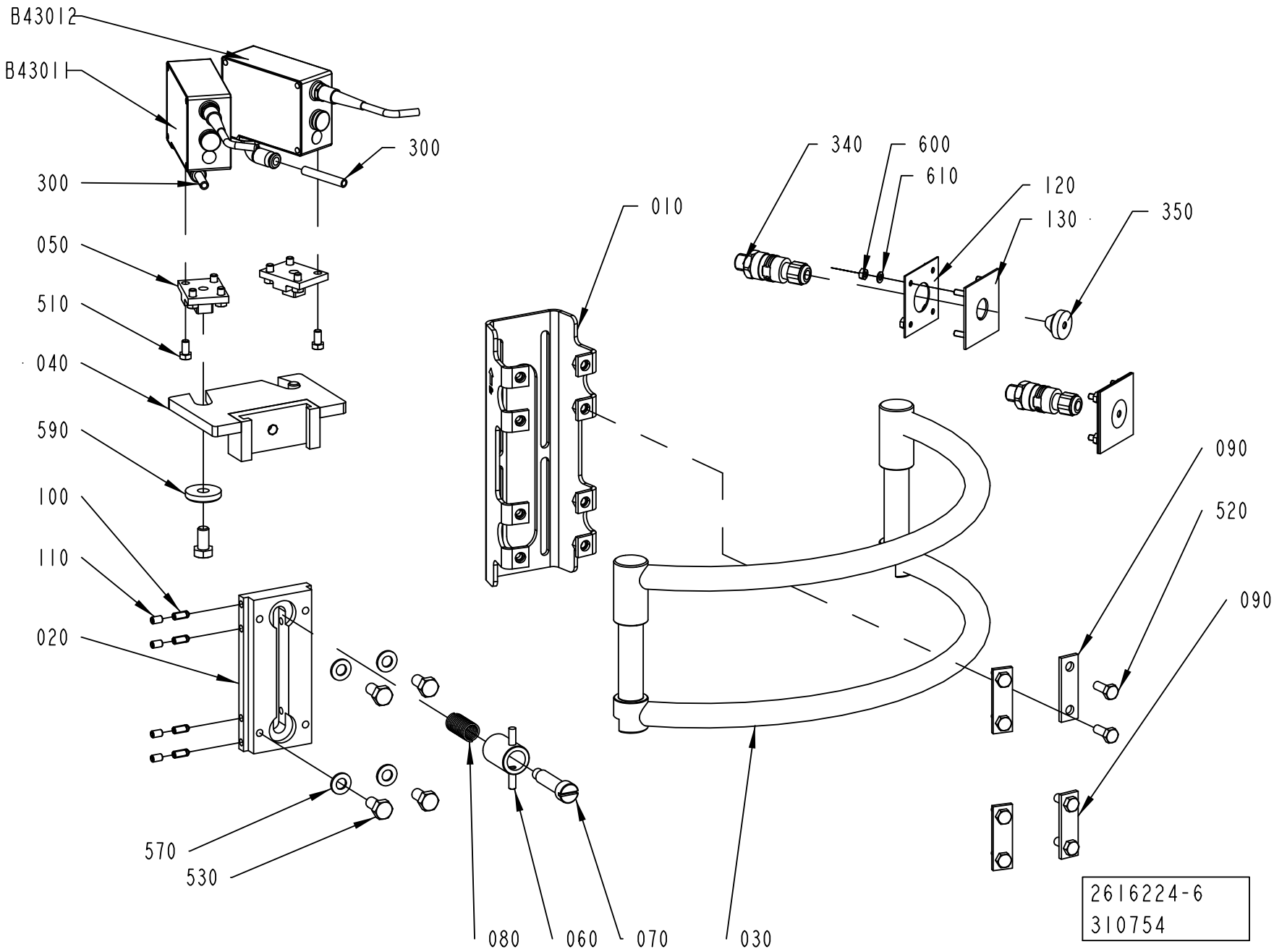
B43012
B43011
300
300
050
510
040
590
100
110
020
570
530
080
060
070
030
010
340
600
610
120
130
350
090
520
090
2616224-6
310754

Pos	Part No	UN	Qty	Description	Page No
TBA 0500B, TBA 1000B, TBA 1500S (Cont'd) (See drawing on page: 4-248)					
090	1036673-0000		4	WASHER	
120	2727703-0000		2	GASKET	
130	2878583-0000		2	PLATE	
340	90459-6570		2	CONNECTOR M12 5-POLES MALE, RSCN5/7	
350	90015-0020		2	LEAD-IN, TET5-7, E-1458016	
590	315125-0165		2	WASHER TBRSB 8,4X26X5 A4	
600	312605-0312		8	HEXAGON NUT, M6M M4 A280	
610	315105-0136		8	WASHER BRB 4,3X8 RFR	
TBA 0500S, TPA 1000SQ NOQC, TPA 1000SQ QC, TPA 0750SQ QC (See drawing on page: 4-248)					
010	2715295-0000		1	BRACKET	
040	2719081-0000		1	BRACKET	
090	1036673-0000		4	WASHER	
120	2727703-0000		2	GASKET	
130	2878583-0000		2	PLATE	
340	90459-6570		2	CONNECTOR M12 5-POLES MALE, RSCN5/7	
350	90015-0020		2	LEAD-IN, TET5-7, E-1458016	
590	315125-0165		2	WASHER TBRSB 8,4X26X5 A4	
600	312605-0312		8	HEXAGON NUT, M6M M4 A280	
610	315105-0136		8	WASHER BRB 4,3X8 RFR	
TBA 0500SQ, TBA 1000SQ, TBA 1000S (See drawing on page: 4-248)					
010	2715295-0000		1	BRACKET	
040	2694095-0000		1	BRACKET	
090	1036673-0000		4	WASHER	
120	2727703-0000		2	GASKET	
130	2878583-0000		2	PLATE	
340	90459-6570		2	CONNECTOR M12 5-POLES MALE, RSCN5/7	
350	90015-0020		2	LEAD-IN, TET5-7, E-1458016	
590	315125-0165		2	WASHER TBRSB 8,4X26X5 A4	
600	312605-0312		8	HEXAGON NUT, M6M M4 A280	
610	315105-0136		8	WASHER BRB 4,3X8 RFR	
TBA 1400B (See drawing on page: 4-248)					
010	2715295-0000		1	BRACKET	
040	2861573-0000		1	BRACKET	
090	1036673-0000		4	WASHER	
120	2727703-0000		2	GASKET	
130	2878583-0000		2	PLATE	
340	90459-6570		2	CONNECTOR M12 5-POLES MALE, RSCN5/7	
350	90015-0020		2	LEAD-IN, TET5-7, E-1458016	
590	2677899-0000		2	WASHER	
600	312605-0312		8	HEXAGON NUT, M6M M4 A280	
610	315105-0136		8	WASHER BRB 4,3X8 RFR	
TBA 1890S, TBA 2000S (See drawing on page: 4-248)					
010	2715295-0000		1	BRACKET	
040	2715302-0000		1	BRACKET	
090	1036673-0000		4	WASHER	
120	2727703-0000		2	GASKET	
130	2878583-0000		2	PLATE	
340	90459-6570		2	CONNECTOR M12 5-POLES MALE, RSCN5/7	
350	90015-0020		2	LEAD-IN, TET5-7, E-1458016	
590	2677899-0000		2	WASHER	
600	312605-0312		8	HEXAGON NUT, M6M M4 A280	
610	315105-0136		8	WASHER BRB 4,3X8 RFR	
TGA 1000SQ, TGA 0750SQ, TGA 0500SQ (See drawing on page: 4-254)					
010	2795023-0000		1	BRACKET	
020	2797465-0000		1	SLIDE	
040	2800296-0000		1	BRACKET	
060	2724929-0000		1	KNOB	
065	2724932-0000		1	NUT	
070	2724930-0000		1	SCREW	
080	90335-0024		1	COMP. SPRING 22250, 1,25X13,75X27	
090	2797439-0000		2	FASTENING PLATE	
100	90287-0148		4	SCREW SPRINGLOAD. SLOTTED HEAD M5X12	
120	2727703-0000		2	GASKET	
130	2878583-0000		2	PLATE	
340	90459-6570		2	CONNECTOR M12 5-POLES MALE, RSCN5/7	
350	90015-0020		2	LEAD-IN, TET5-7, E-1458016	
590	315125-0165		2	WASHER TBRSB 8,4X26X5 A4	
600	312605-0312		8	HEXAGON NUT, M6M M4 A280	
610	315105-0136		8	WASHER BRB 4,3X8 RFR	
TPA 0250SQ, TPA 0200SQ (See drawing on page: 4-254)					
010	2715296-0000		1	BRACKET	
020	2724928-0000		1	SLIDE	
040	2724927-0000		1	BRACKET	
060	2724929-0000		1	KNOB	
065	2724932-0000		1	NUT	
070	2724930-0000		1	SCREW	
080	90335-0024		1	COMP. SPRING 22250, 1,25X13,75X27	
090	1036673-0000		4	WASHER	
100	90287-0148		4	SCREW SPRINGLOAD. SLOTTED HEAD M5X12	
110	312318-0323		4	SCREW ISO4029 M5X8 A4	
120	2727703-0000		2	GASKET	
130	2878583-0000		2	PLATE	
340	90459-6570		2	CONNECTOR M12 5-POLES MALE, RSCN5/7	

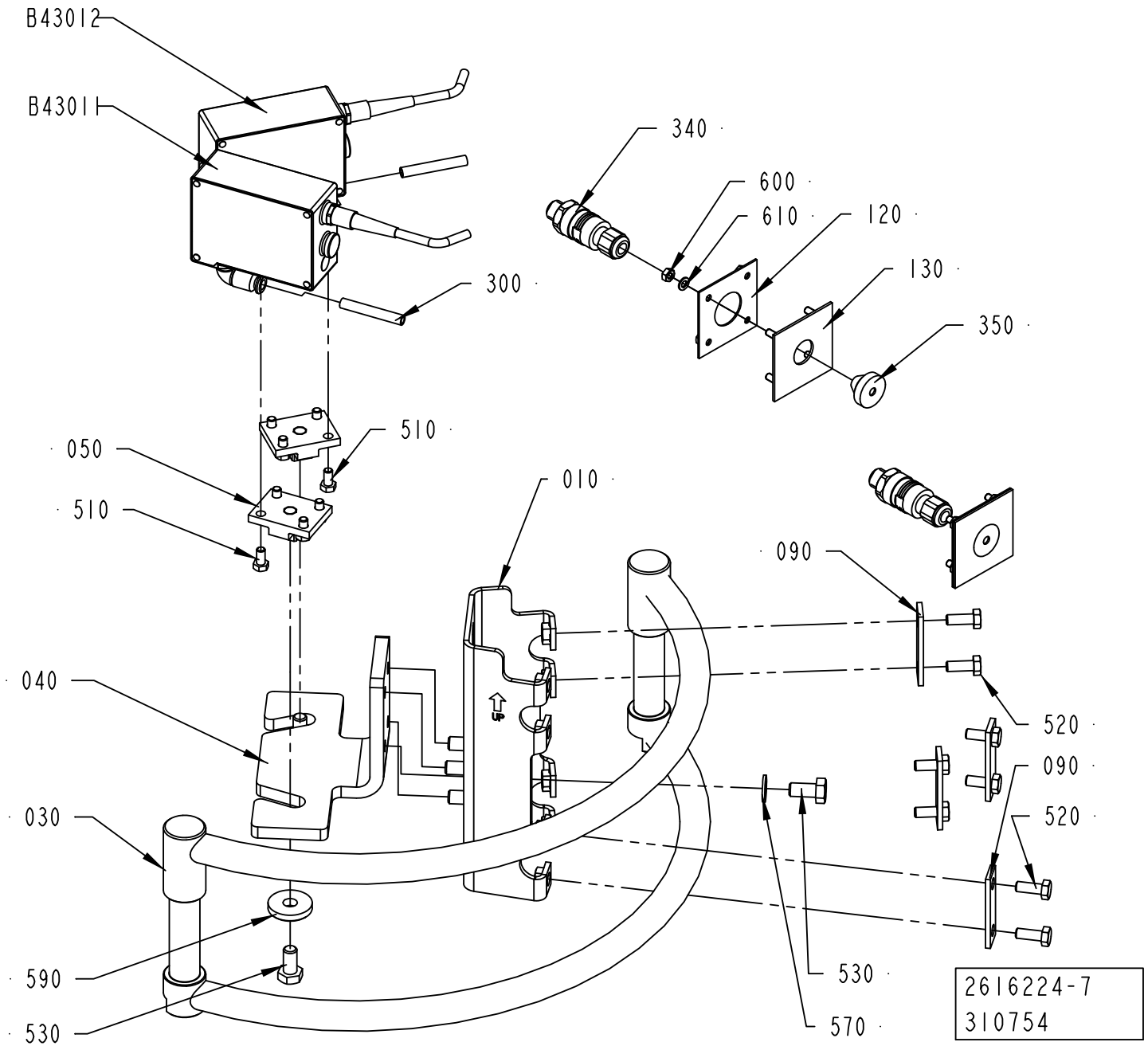
B43012
B43011
300
340
600
610
120
130
350
510
050
510
010
090
040
030
590
530
520
090
520
530
570
2616224-7
310754

Pos	Part No	UN	Qty	Description	Page No
TPA 0250SQ, TPA 0200SQ (Cont'd) (See drawing on page: 4-254)					
350	90015-0020		2	LEAD-IN, TET5-7, E-1458016	
590	315125-0165		2	WASHER TBRSB 8,4X26X5 A4	
600	312605-0312		8	HEXAGON NUT, M6M M4 A280	
610	315105-0136		8	WASHER BRB 4,3X8 RFR	
Common Parts					
030	2715297-0000		1	BOW CLAMP	
050	1036674-0000		2	FASTENING PLATE	
300	90166-0081	MM	1500	TUBE 6 MM PA BLUE	
510	312105-0325		8	SCREW M6S ISO 4017 M5X10 A480	
520	312105-0368		8	SCREW M6S ISO 4017 M6X16 A480	
530	312105-0449		6	SCREW M6S ISO 4017 M8X16 A480	
570	315105-0165		4	WASHER BRB 8,4X16 RFR	
B43011	90458-0601		1	CONTRAST SCANNER, KT15W-P2110S01	
	342732-0102		*1*	*ELBOW PIPE JOINT, EXT.THREAD, D=6MM-G1/8*	
B43012	90458-0601		1	CONTRAST SCANNER, KT15W-P2110S01	
	342732-0102		*1*	*ELBOW PIPE JOINT, EXT.THREAD, D=6MM-G1/8*	

Pos	Part No	UN	Qty	Description	Page No

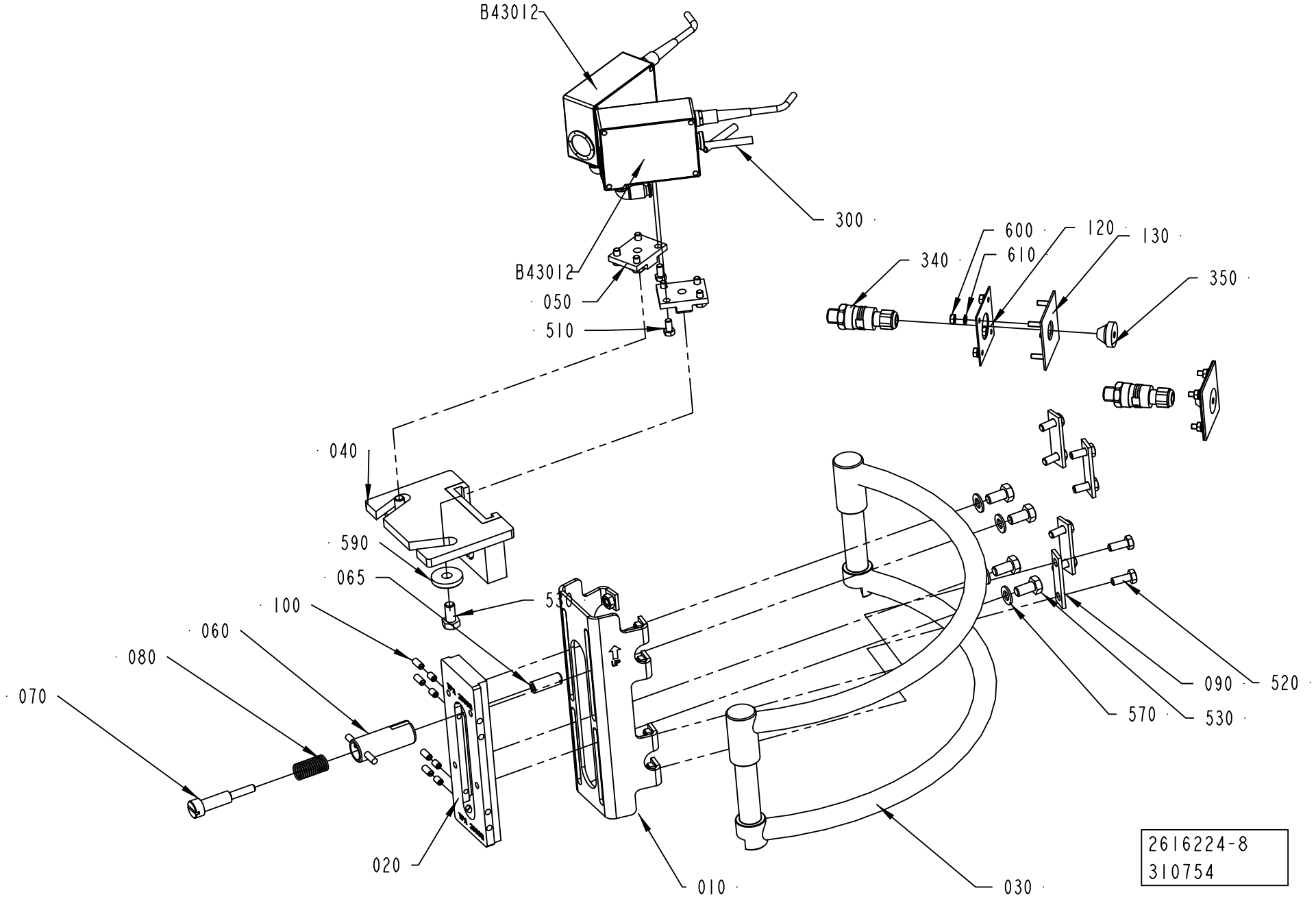
B43012
300
B43012
050
510
600
120
130
340
610
350
040
590
065
530
100
060
080
070
090
520
570
530
020
010
030
2616224-8
310754

Pos	Part No	UN	Qty	Description	Page No
SEE PREVIOUS LISTS PAGES: 4-249, 4-251, 4-253.					

Pos	Part No	UN	Qty	Description	Page No

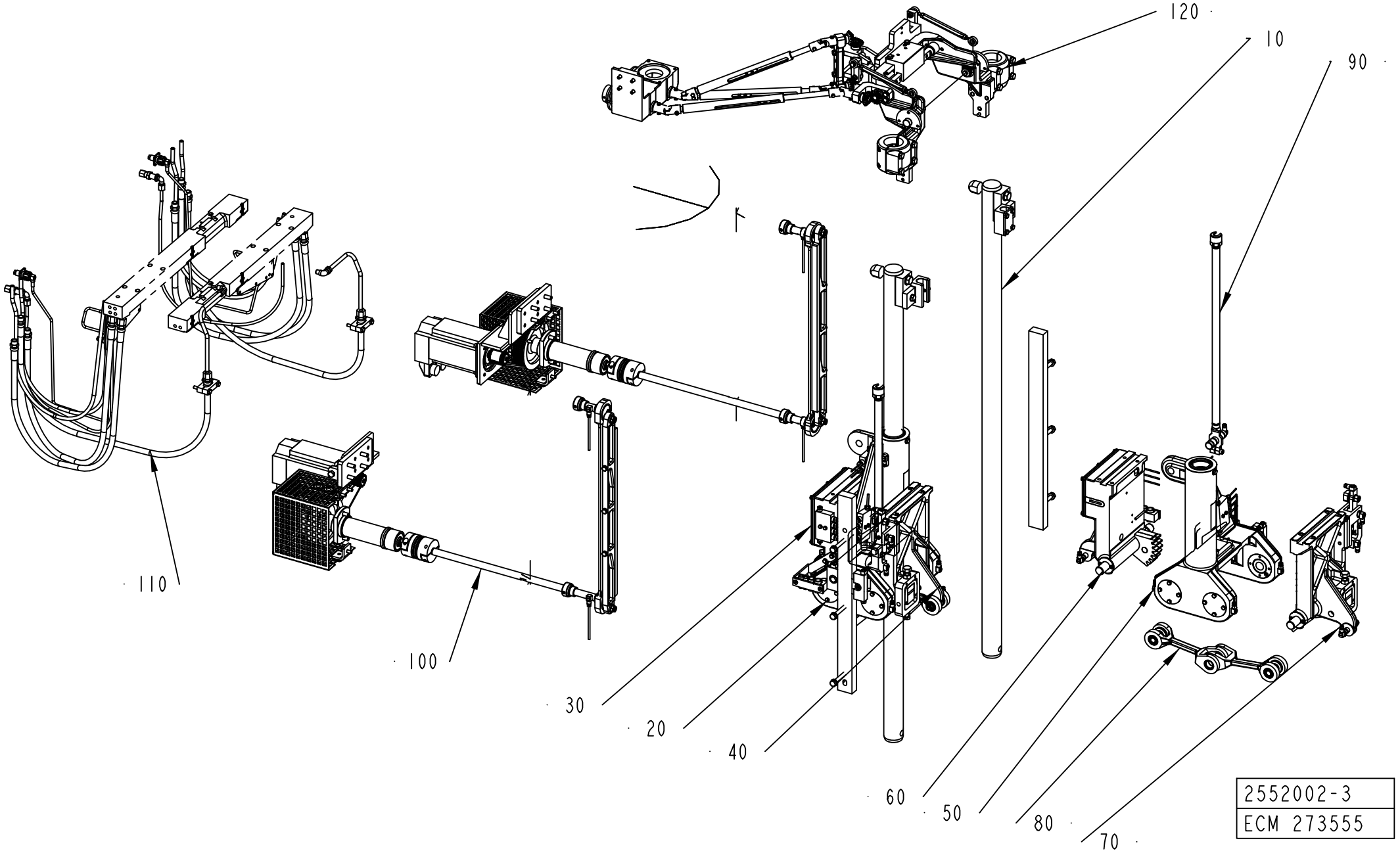
120
10
90
110
100
30
20
40
60
50
80
70
2552002-3
ECM 273555

ECM: 290719 - 20061201
Group number: 2552002-0250
Assembly Drawing: 2552002-3_1_AA

Pos	Part No	UN	Qty	Description	Page No
-					
010	2542489-0200		1	GUIDE	**4-259**
020	1348455-0200		1	YOKE LEFT	**4-261**
030	1348456-0200		1	PRESSURE ARM LEFT	**4-263, 4-265**
040	1348457-0200		1	CUTTING ARM LEFT	**4-267, 4-269, 4-271**
050	1348460-0200		1	YOKE RIGHT	**4-273**
060	1348461-0200		1	PRESSURE ARM RIGHT	**4-275, 4-277**
070	1348462-0200		1	CUTTING ARM RIGHT	**4-279, 4-281, 4-283**
080	1348466-0100		4	SCISSOR ARM LINK	**4-285**
090	1334651-0100		2	LINK	**4-287**
100	2792300-0100		1	DESIGN CORRECTION	**4-289**
110	2503661-0100		1	CABLE CONNECTION	**4-299**
120	2613646-0100		1	VOLUME ADJUSTER	**4-301**

Pos	Part No	UN	Qty	Description	Page No

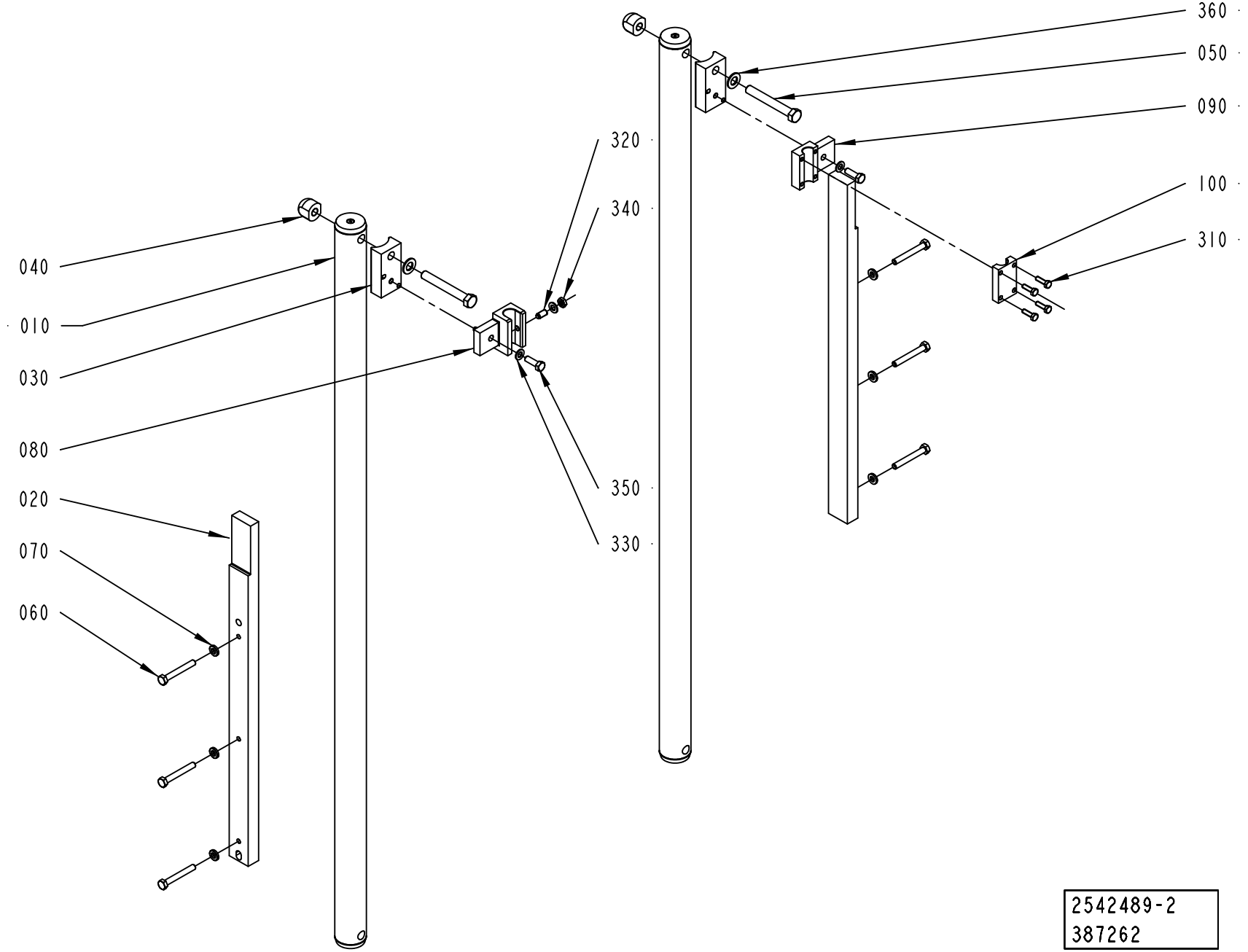
360
050
090
320
340
100
310
040
010
030
080
020
070
060
350
330
2542489-2
387262

ECM: 387859 - 20090701
Group number: 2542489-0200
Assembly Drawing: 2542489-2_1_AB

Pos	Part No	UN	Qty	Description	Page No
-					
010	3017747-0000		2	GUIDE	
020	2698628-0000		2	RULER	
030	2616225-0000		2	CLAMP	
040	2542488-0000		2	NUT	
050	312105-0550		2	SCREW M6S ISO 4014 M12X90 A480	
060	312105-0463		6	SCREW M6S ISO 4014 M8X60 A480	
070	315115-0165		6	WASHER PLAIN, TBRB 8,4/16 H=3	
080	2616221-0000		1	BRACKET	
090	2715300-0000		1	BRACKET	
100	2715301-0000		1	SUPPORT	
310	312105-0370		4	SCREW M6S ISO 4017 M6X20 A480	
320	90287-0112		1	SCREW SPRINGLOAD. SLOTTED HEAD M8X16	
330	315105-0165		3	WASHER BRB 8,4X16 RFR	
340	312625-0318		1	HEXAGON THIN NUT, EN 24035 ML6M M8 A4	
350	312105-0453		2	SCREW M6S ISO 4017 M8X25 A480	
360	315105-0178		2	WASHER BRB 13X24 RFR	

Pos	Part No	UN	Qty	Description	Page No

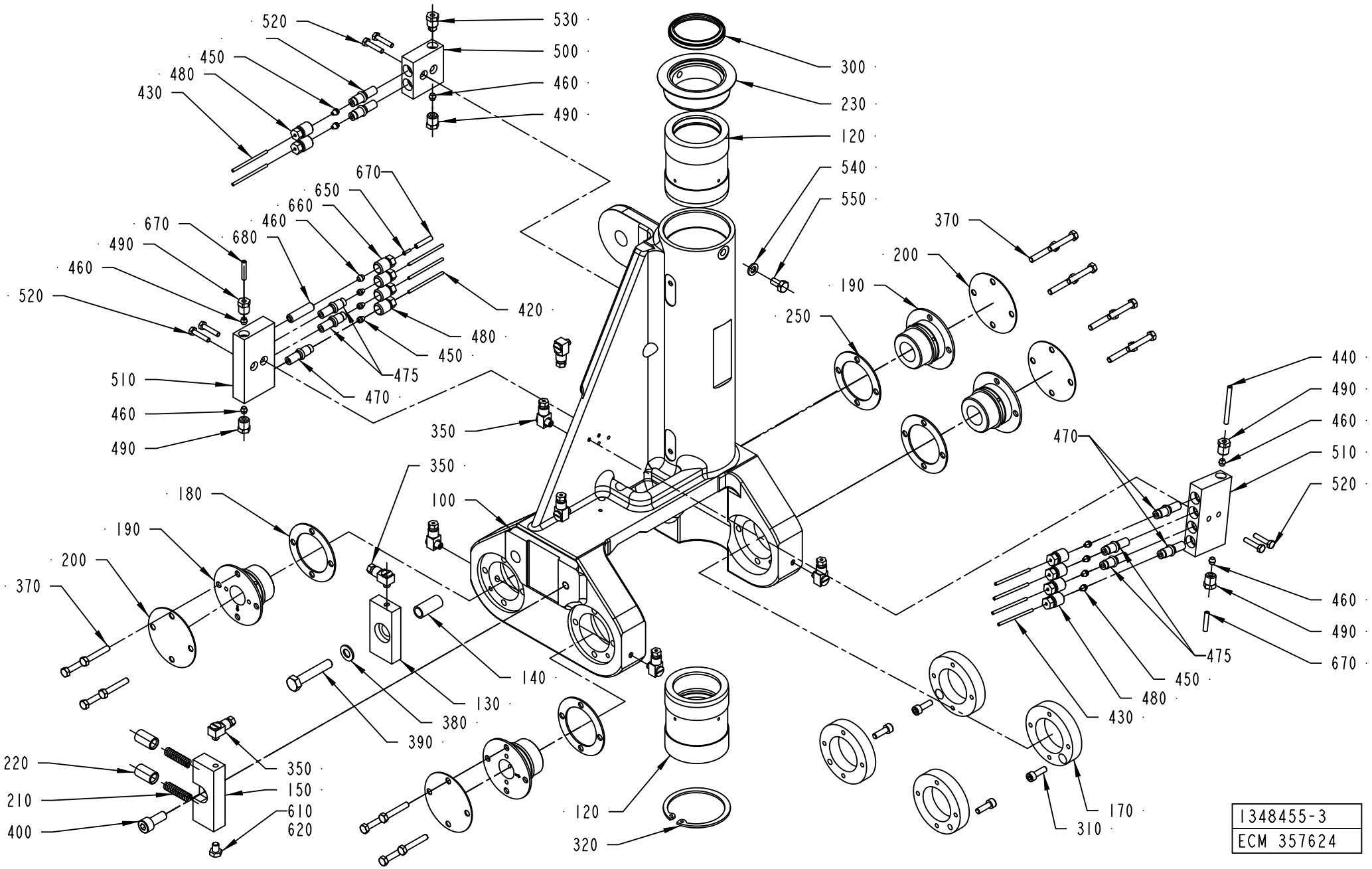
520
530
450
500
480
460
430
490
670
650
660
460
670
680
490
420
460
480
520
450
475
510
470
460
490
350
350
180
100
190
200
370
140
130
380
390
220
350
210
150
610
400
620
120
320
300
230
120
540
550
370
200
190
250
440
490
460
510
520
470
460
490
670
475
450
480
430
170
310
1348455-3
ECM 357624

ECM: 361258 - 20081001
Group number: 1348455-0200
Assembly Drawing: 1348455-3_1_AC

Pos	Part No	UN	Qty	Description	Page No
A3/FLEX					
450	90028-0020		9	CONE TUBE 2,5MM	
460	90028-0021		6	CONE TUBE 4 MM	
470	90092-0052		3	METERING VALVE 10 MM3	
480	90134-0039		9	BUSHING VALVE CONNECTION 2,5 MM	
650	90134-0031		1	SLEEVE FOR PLASTIC TUBE	
660	90134-0040		1	BUSHING VALVE CONNECTION 4 MM	
670	90166-0109	MM	1000	TUBE 4 MM PA TRANSP.	
680	90134-0051		1	SPACING COLLAR DOSING BLOCK	
Common Parts					
100	1195360-0000		1	YOKE LEFT	
120	2981828-0000		2	BUSHING	
	315259-0102		*1*	*FELT SEAL 22-47 MM*	
130	1037104-0000		1	LOCATING PIECE	
140	1037106-0000		1	SLEEVE	
150	1349972-0000		1	SPRING HOUSING	
170	36753-0000		4	RING	
180	29886-0000		2	LACE	
190	246513-0000		4	BEARING	
200	239874-0000		4	WASHER	
210	20494-0000		2	COMPRESSION SPRING	
220	31838-0000		2	PLUNGER	
230	1349780-0000		1	LID	
250	1038509-0000		2	WASHER	
300	90600-5307		1	SCRAPER, 45X53X7 MM	
310	312115-0329		4	SCREW ISO4762 M5X16 A4 80	
320	315753-0135		1	RETAINING RING FOR BORE DIN 472 60 A2	
350	90134-0058		8	CONNECTION	
370	312105-0335		16	SCREW M6S ISO 4014 M5X30 A480	
380	315105-0165		1	WASHER BRB 8,4X16 RFR	
390	312109-0460		1	SCREW M6S ISO 4017 M8X45 A480	
400	312115-0451		1	SCREW ISO4762 M8X20 A4 80	
410	90166-0109	MM	500	TUBE 4 MM PA TRANSP.	
420	90166-0143	MM	500	TUBE 2,5 MM PA TRANSP.	
430	90266-0019	MM	300	PIPE	
440	90266-0165	MM	500	BRASS PIPE	
475	90092-0054		6	METERING VALVE 50 MM3	
490	90134-0038		5	BUSHING/NUT INLET/OUTLET 4 MM	
500	90032-0038		1	BLOCK 2 WAYS	
510	90032-0039		2	BLOCK 4 WAYS	
520	312105-0295		6	SCREW M6S ISO 4017 M4X20 A470	
530	90087-0019		1	PLUG M10X1 STAINLESS	
540	315105-0153		1	WASHER BRB 6,4X12 RFR	
550	312105-0366		1	SCREW M6S ISO 4017 M6X12 A480	
610	312105-0362		1	SCREW M6S ISO 4017 M6X8 A480	
620	90157-0021		1	LOCKING FLUID LOCTITE 270	

Machine Type Group Description Used-In Group Number Page No

PRESSURE ARM LEFT

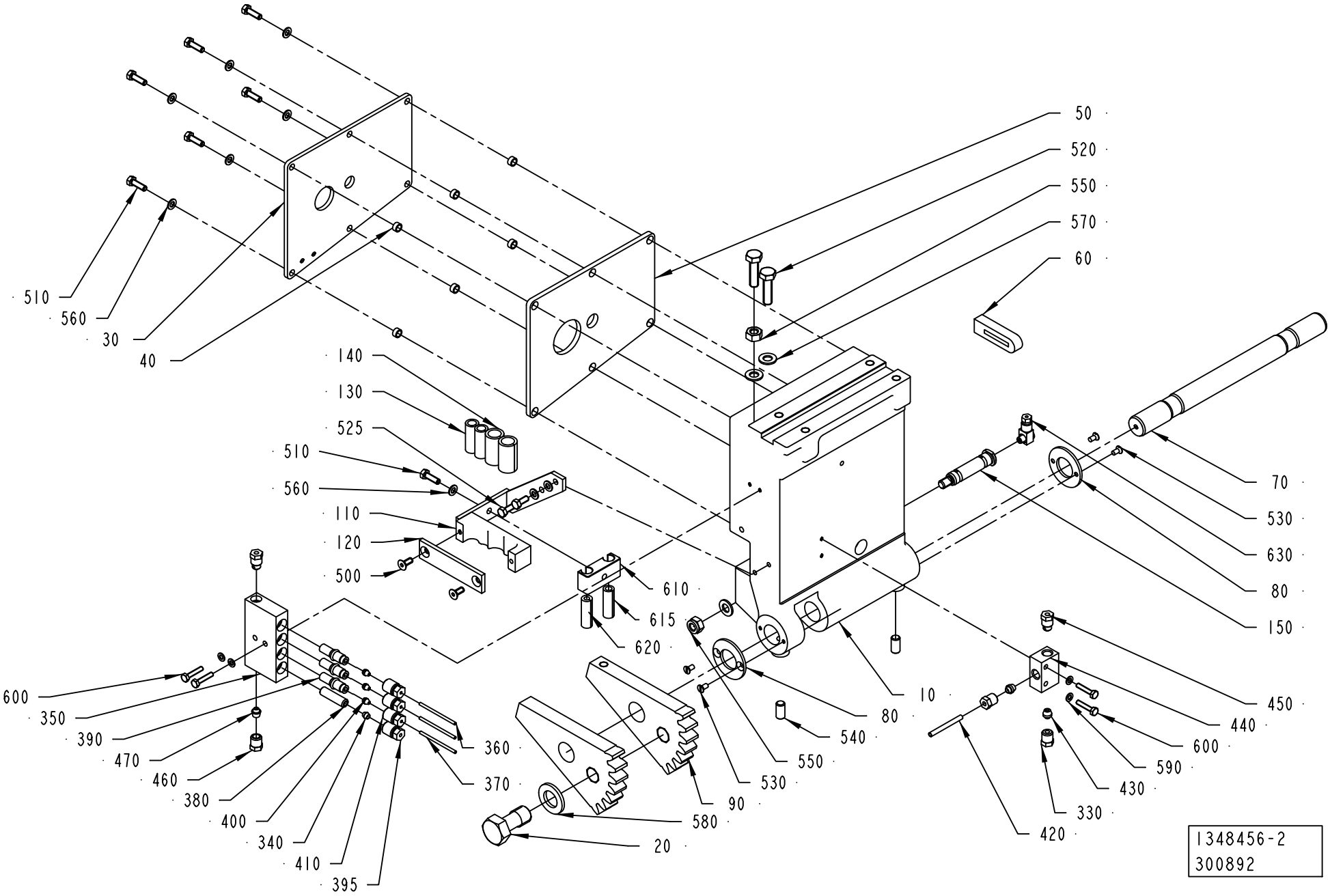

ECM: 387840 - 20090403
Group number: 1348456-0200
Assembly Drawing: 1348456-2_1_AB

This list covers pages from 4-262 to 4-265

Pos	Part No	UN	Qty	Description	Page No
A3/FLEX QC (See drawing on page: 4-264)					
030	1036485-0000		1	COVERING PLATE	
040	1036501-0000		6	SPACER	
050	1036484-0000		1	GASKET	
060	1036483-0000		1	SEAL	
390	90092-0052		1	METERING VALVE 10 MM3	
400	90028-0020		1	CONE TUBE 2,5MM	
510	312105-0329		7	SCREW M6S ISO 4017 M5X16 A480	
560	315105-0146		9	WASHER BRB 5,3X10 RFR	
620	2889947-0000		1	HOSE	
650	90134-0052		2	PLUG DOSING BLOCK	
A3/FLEX NOQC (See drawing on page: 4-262)					
030	1036485-0000		1	COVERING PLATE	
040	1036501-0000		6	SPACER	
050	1036484-0000		1	GASKET	
060	1036483-0000		1	SEAL	
390	90092-0052		3	METERING VALVE 10 MM3	
400	90028-0020		3	CONE TUBE 2,5MM	
510	312105-0329		7	SCREW M6S ISO 4017 M5X16 A480	
560	315105-0146		9	WASHER BRB 5,3X10 RFR	
620	2889947-0000		1	HOSE	
Common Parts					
010	1035877-0000		1	ARM LEFT	
020	1037069-0000		1	SCREW	
070	1035788-0000		1	SHAFT	
080	536704-0000		2	WASHER	
090	1036156-0000		2	TOOTH PART	
110	1349867-0000		1	FASTENING PLATE	
120	1349868-0000		1	FASTENING PLATE	
130	1478000-0000		2	HOSE	
140	1478001-0000		2	HOSE	
150	1037853-0000		1	SHAFT	
330	90134-0038		2	BUSHING/NUT INLET/OUTLET 4 MM	
340	90028-0021		1	CONE TUBE 4 MM	
350	90032-0039		1	BLOCK 4 WAYS	
360	90166-0143	MM	1500	TUBE 2,5 MM PA TRANSP.	
370	90266-0019	MM	500	PIPE	
380	90134-0051		1	SPACING COLLAR DOSING BLOCK	
395	90134-0040		1	BUSHING VALVE CONNECTION 4 MM	
400	90028-0020		1	CONE TUBE 2,5MM	
410	90134-0039		3	BUSHING VALVE CONNECTION 2,5 MM	
420	90266-0165	MM	200	BRASS PIPE	
430	90028-0024		2	CONE TUBE 4 MM	
440	90032-0043		1	DISTRIBUTION BLOCK 3 WAYS	
450	90087-0019		2	PLUG M10X1 STAINLESS	
460	90134-0055		1	BUSHING/NUT INLET/OUTLET 6 MM	
470	90028-0025		1	CONE TUBE 6 MM	
500	312155-0327		2	SCREW DIN 7991 MF6S M5X12 A4 70	
520	312105-0455		2	SCREW M6S ISO 4017 M8X30 A480	
525	312105-0327		2	SCREW M6S ISO 4017 M5X12 A480	
530	312145-0287		4	SCREW ISO 2009 MFS M4X8 A4	
540	312318-0449		2	SCREW ISO4029 M8X16 A4	
550	312605-0318		1	HEXAGON NUT, M6M M8 A280	
570	315105-0165		1	WASHER BRB 8,4X16 RFR	
580	315105-0186		1	WASHER BRB 17X30 RFR	
590	315105-0136		4	WASHER BRB 4,3X8 RFR	
600	312105-0295		4	SCREW M6S ISO 4017 M4X20 A470	
610	2889885-0000		1	BLOCK	
615	2889946-0000		1	HOSE	
630	90134-0058		1	CONNECTION	
640	312812-0318		1	HEXAGON NUT, NY-LOCK M8 A480	

Machine Type | Group Description | Used-In | Group Number | Page No

PRESSURE ARM LEFT

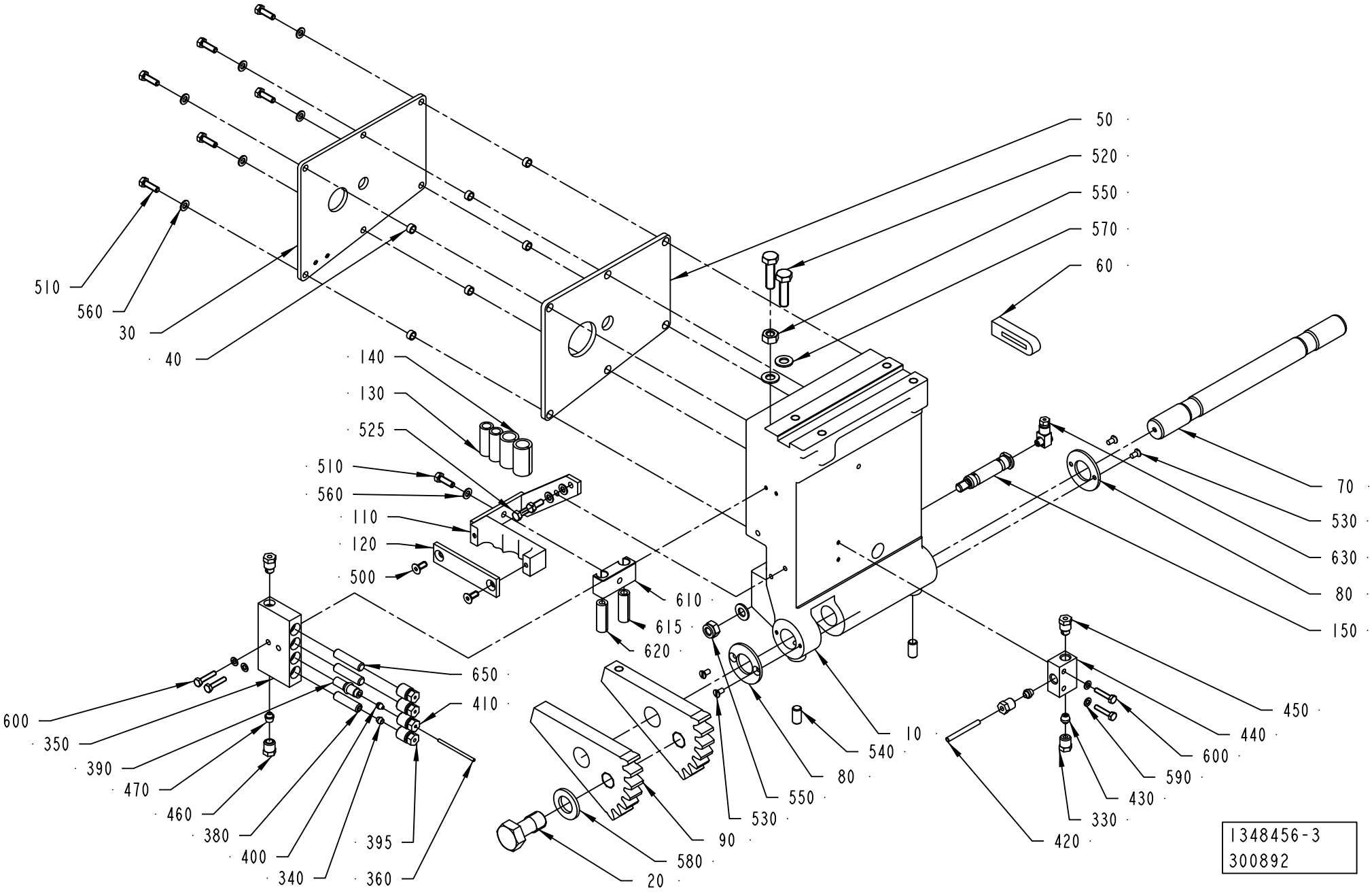

ECM: 387840 - 20090403
Group number: 1348456-0200
Assembly Drawing: 1348456-3_1_AB

This list covers pages from 4-262 to 4-265

Pos	Part No	UN	Qty	Description	Page No
A3/FLEX QC (See drawing on page: 4-264)					
030	1036485-0000		1	COVERING PLATE	
040	1036501-0000		6	SPACER	
050	1036484-0000		1	GASKET	
060	1036483-0000		1	SEAL	
390	90092-0052		1	METERING VALVE 10 MM3	
400	90028-0020		1	CONE TUBE 2,5MM	
510	312105-0329		7	SCREW M6S ISO 4017 M5X16 A480	
560	315105-0146		9	WASHER BRB 5,3X10 RFR	
620	2889947-0000		1	HOSE	
650	90134-0052		2	PLUG DOSING BLOCK	
A3/FLEX NOQC (See drawing on page: 4-262)					
030	1036485-0000		1	COVERING PLATE	
040	1036501-0000		6	SPACER	
050	1036484-0000		1	GASKET	
060	1036483-0000		1	SEAL	
390	90092-0052		3	METERING VALVE 10 MM3	
400	90028-0020		3	CONE TUBE 2,5MM	
510	312105-0329		7	SCREW M6S ISO 4017 M5X16 A480	
560	315105-0146		9	WASHER BRB 5,3X10 RFR	
620	2889947-0000		1	HOSE	
Common Parts					
010	1035877-0000		1	ARM LEFT	
020	1037069-0000		1	SCREW	
070	1035788-0000		1	SHAFT	
080	536704-0000		2	WASHER	
090	1036156-0000		2	TOOTH PART	
110	1349867-0000		1	FASTENING PLATE	
120	1349868-0000		1	FASTENING PLATE	
130	1478000-0000		2	HOSE	
140	1478001-0000		2	HOSE	
150	1037853-0000		1	SHAFT	
330	90134-0038		2	BUSHING/NUT INLET/OUTLET 4 MM	
340	90028-0021		1	CONE TUBE 4 MM	
350	90032-0039		1	BLOCK 4 WAYS	
360	90166-0143	MM	1500	TUBE 2,5 MM PA TRANSP.	
370	90266-0019	MM	500	PIPE	
380	90134-0051		1	SPACING COLLAR DOSING BLOCK	
395	90134-0040		1	BUSHING VALVE CONNECTION 4 MM	
400	90028-0020		1	CONE TUBE 2,5MM	
410	90134-0039		3	BUSHING VALVE CONNECTION 2,5 MM	
420	90266-0165	MM	200	BRASS PIPE	
430	90028-0024		2	CONE TUBE 4 MM	
440	90032-0043		1	DISTRIBUTION BLOCK 3 WAYS	
450	90087-0019		2	PLUG M10X1 STAINLESS	
460	90134-0055		1	BUSHING/NUT INLET/OUTLET 6 MM	
470	90028-0025		1	CONE TUBE 6 MM	
500	312155-0327		2	SCREW DIN 7991 MF6S M5X12 A4 70	
520	312105-0455		2	SCREW M6S ISO 4017 M8X30 A480	
525	312105-0327		2	SCREW M6S ISO 4017 M5X12 A480	
530	312145-0287		4	SCREW ISO 2009 MFS M4X8 A4	
540	312318-0449		2	SCREW ISO4029 M8X16 A4	
550	312605-0318		1	HEXAGON NUT, M6M M8 A280	
570	315105-0165		1	WASHER BRB 8,4X16 RFR	
580	315105-0186		1	WASHER BRB 17X30 RFR	
590	315105-0136		4	WASHER BRB 4,3X8 RFR	
600	312105-0295		4	SCREW M6S ISO 4017 M4X20 A470	
610	2889885-0000		1	BLOCK	
615	2889946-0000		1	HOSE	
630	90134-0058		1	CONNECTION	
640	312812-0318		1	HEXAGON NUT, NY-LOCK M8 A480	

Machine Type | Group Description | Used-In | Group Number | Page No

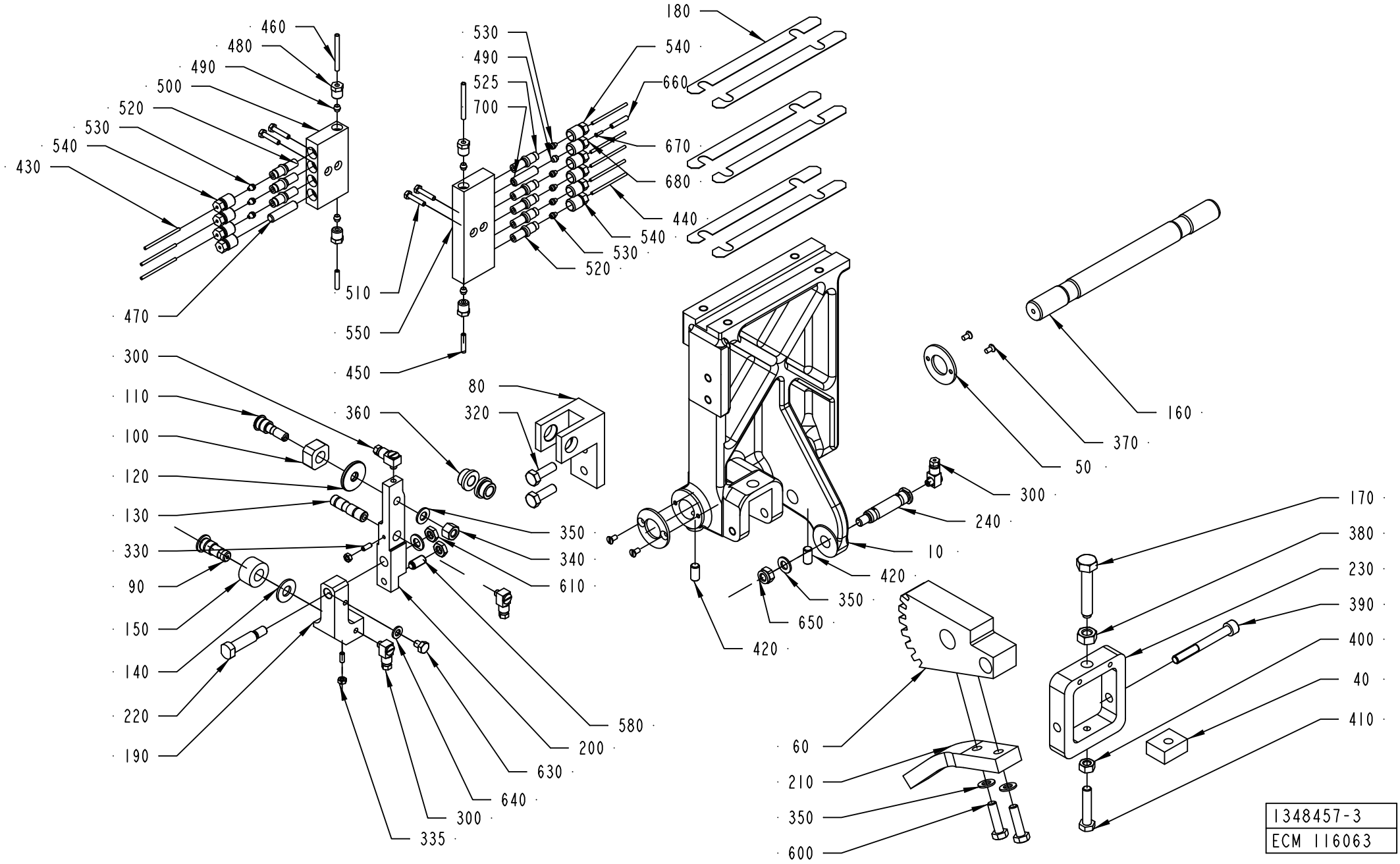
460
480
490
500
520
530
540
430
470
510
550
450
530
490
525
700
180
540
660
670
680
440
540
530
520
300
110
100
120
130
330
90
150
140
220
190
360
80
320
350
340
610
580
200
630
640
300
335
420
650
350
420
10
240
300
50
370
160
60
210
350
600
170
380
230
390
400
40
410
1348457-3
ECM 116063

ECM: 345378 - 20080701
Group number: 1348457-0200
Assembly Drawing: 1348457-3_1_AA

This list covers pages from 4-266 to 4-271

Pos	Part No	UN	Qty	Description	Page No
A3/FLEX NOQC (See drawing on page: 4-266)					
080	1036617-0000		1	BRACKET	
090	1036620-0000		1	SHAFT	
100	256628-0000		1	PIECE	
110	256629-0001		1	AXLE PIN	
120	441706-0000		1	WASHER	
130	1036615-0000		1	SHAFT	
140	1036616-0000		1	WASHER	
150	1036618-0000		1	ROLL	
190	1348671-0000		1	JOINT LEFT	
200	1512316-0000		1	ARM LEFT	
220	1348669-0000		1	SCREW	
300	90134-0058		4	CONNECTION	
320	312105-0453		2	SCREW M6S ISO 4017 M8X25 A480	
330	312318-0289		2	SCREW ISO4029 M4X10 A4	
335	312605-0312		2	HEXAGON NUT, M6M M4 A280	
340	312811-0318		1	NUT HEX.LOCK HELI COIL M8 SS	
350	315105-0165		5	WASHER BRB 8,4X16 RFR	
360	321101-0163		2	FLANGE BUSHING, 10X16X10 MM	
450	90166-0109	MM	600	TUBE 4 MM PA TRANSP.	
470	90134-0052		1	PLUG DOSING BLOCK	
490	90028-0021		5	CONE TUBE 4 MM	
520	90092-0052		7	METERING VALVE 10 MM3	
525	90092-0054		1	METERING VALVE 50 MM3	
530	90028-0020		8	CONE TUBE 2,5MM	
540	90134-0039		9	BUSHING VALVE CONNECTION 2,5 MM	
580	90287-0112		1	SCREW SPRINGLOAD. SLOTTED HEAD M8X16	
610	312625-0318		2	HEXAGON THIN NUT, EN 24035 ML6M M8 A4	
630	312105-0362		1	SCREW M6S ISO 4017 M6X8 A480	
640	315105-0153		1	WASHER BRB 6,4X12 RFR	
660	90166-0109	MM	1000	TUBE 4 MM PA TRANSP.	
670	90134-0031		1	SLEEVE FOR PLASTIC TUBE	
680	90134-0040		1	BUSHING VALVE CONNECTION 4 MM	
700	90134-0051		1	SPACING COLLAR DOSING BLOCK	
A3/FLEX TBA 0250SQ QC, A3/FLEX TBA 0200SQ QC (See drawing on page: 4-268)					
080	1338793-0000		1	BRACKET	
090	1036620-0000		1	SHAFT	
100	256628-0000		1	PIECE	
110	256629-0001		1	AXLE PIN	
120	441706-0000		1	WASHER	
130	1036615-0000		1	SHAFT	
140	1036616-0000		1	WASHER	
150	1036618-0000		1	ROLL	
190	1348671-0000		1	JOINT LEFT	
200	2682199-0000		1	ARM	
220	1348669-0000		1	SCREW	
300	90134-0058		4	CONNECTION	
320	312105-0453		2	SCREW M6S ISO 4017 M8X25 A480	
330	312318-0289		2	SCREW ISO4029 M4X10 A4	
335	312605-0312		2	HEXAGON NUT, M6M M4 A280	
340	312811-0318		1	NUT HEX.LOCK HELI COIL M8 SS	
350	315105-0165		5	WASHER BRB 8,4X16 RFR	
360	321101-0163		2	FLANGE BUSHING, 10X16X10 MM	
450	90166-0109	MM	600	TUBE 4 MM PA TRANSP.	
470	90134-0052		3	PLUG DOSING BLOCK	
490	90028-0021		5	CONE TUBE 4 MM	
520	90092-0052		5	METERING VALVE 10 MM3	
525	90092-0054		1	METERING VALVE 50 MM3	
530	90028-0020		6	CONE TUBE 2,5MM	
540	90134-0039		9	BUSHING VALVE CONNECTION 2,5 MM	
580	90287-0112		1	SCREW SPRINGLOAD. SLOTTED HEAD M8X16	
610	312625-0318		2	HEXAGON THIN NUT, EN 24035 ML6M M8 A4	
630	312105-0362		1	SCREW M6S ISO 4017 M6X8 A480	
640	315105-0153		1	WASHER BRB 6,4X12 RFR	
660	90166-0109	MM	1000	TUBE 4 MM PA TRANSP.	
670	90134-0031		1	SLEEVE FOR PLASTIC TUBE	
680	90134-0040		1	BUSHING VALVE CONNECTION 4 MM	
700	90134-0051		1	SPACING COLLAR DOSING BLOCK	
A3/FLEX TBA 0500B QC, A3/FLEX TBA 1000B QC, A3/FLEX TBA 0250B QC, A3/FLEX TBA 0200B QC, A3/FLEX TBA 0330S QC, A3/FLEX TBA 1890S QC, A3/FLEX TBA 2000S QC, A3/FLEX TBA 0200M QC, A3/FLEX TBA 0250S QC, A3/FLEX TPA 1000SQ QC, A3/FLEX TPA 0750SQ QC, A3/FLEX TPA 0200SQ QC, A3/FLEX TPA 0250SQ QC, A3/FLEX TBA 1400B, A3/FLEX TBA 0500SQ QC, A3/FLEX TBA 1000SQ QC (See drawing on page: 4-268)					
080	1036617-0000		1	BRACKET	
090	1036620-0000		1	SHAFT	
100	256628-0000		1	PIECE	
110	256629-0001		1	AXLE PIN	
120	441706-0000		1	WASHER	
130	1036615-0000		1	SHAFT	
140	1036616-0000		1	WASHER	
150	1036618-0000		1	ROLL	
190	1348671-0000		1	JOINT LEFT	
200	1512316-0000		1	ARM LEFT	
220	1348669-0000		1	SCREW	

Machine Type | Group Description | Used-In | Group Number | Page No

CUTTING ARM LEFT

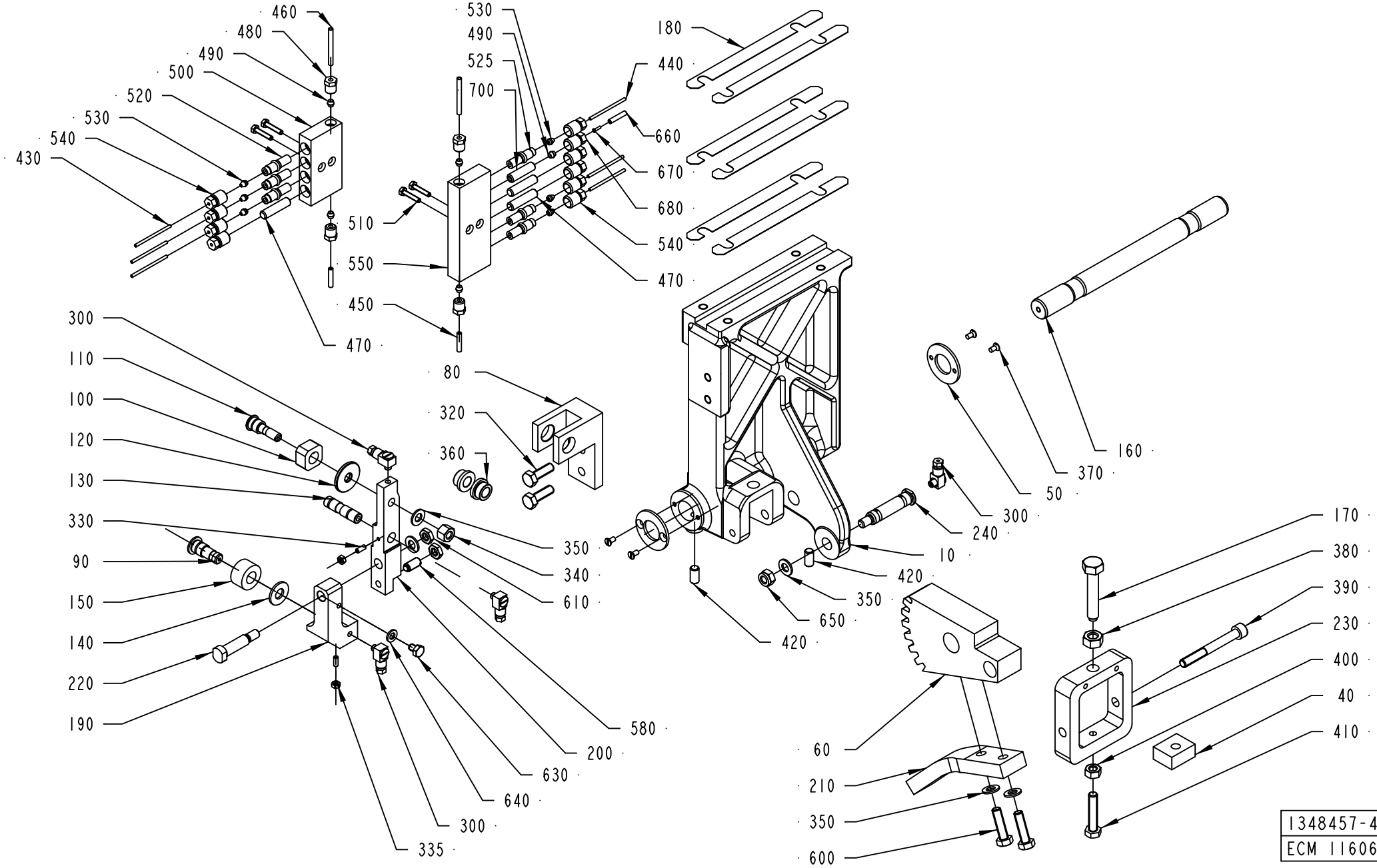

Pos	Part No	UN	Qty	Description	Page No
A3/FLEX TBA 0500B QC, A3/FLEX TBA 1000B QC, A3/FLEX TBA 0250B QC, A3/FLEX TBA 0200B QC, A3/FLEX TBA 0330S QC, A3/FLEX TBA 1890S QC, A3/FLEX TBA 2000S QC, A3/FLEX TBA 0200M QC, A3/FLEX TBA 0250S QC, A3/FLEX TPA 1000SQ QC, A3/FLEX TPA 0750SQ QC, A3/FLEX TPA 0200SQ QC, A3/FLEX TPA 0250SQ QC, A3/FLEX TBA 1400B, A3/FLEX TBA 0500SQ QC, A3/FLEX TBA 1000SQ QC (Cont'd) (See drawing on page: 4-268)					
300	90134-0058		4	CONNECTION	
320	312105-0453		2	SCREW M6S ISO 4017 M8X25 A480	
330	312318-0289		2	SCREW ISO4029 M4X10 A4	
335	312605-0312		2	HEXAGON NUT, M6M M4 A280	
340	312811-0318		1	NUT HEX.LOCK HELI COIL M8 SS	
350	315105-0165		5	WASHER BRB 8,4X16 RFR	
360	321101-0163		2	FLANGE BUSHING, 10X16X10 MM	
450	90166-0109	MM	600	TUBE 4 MM PA TRANSP.	
470	90134-0052		3	PLUG DOSING BLOCK	
490	90028-0021		5	CONE TUBE 4 MM	
520	90092-0052		5	METERING VALVE 10 MM3	
525	90092-0054		1	METERING VALVE 50 MM3	
530	90028-0020		6	CONE TUBE 2,5MM	
540	90134-0039		9	BUSHING VALVE CONNECTION 2,5 MM	
580	90287-0112		1	SCREW SPRINGLOAD. SLOTTED HEAD M8X16	
610	312625-0318		2	HEXAGON THIN NUT, EN 24035 ML6M M8 A4	
630	312105-0362		1	SCREW M6S ISO 4017 M6X8 A480	
640	315105-0153		1	WASHER BRB 6,4X12 RFR	
660	90166-0109	MM	1000	TUBE 4 MM PA TRANSP.	
670	90134-0031		1	SLEEVE FOR PLASTIC TUBE	
680	90134-0040		1	BUSHING VALVE CONNECTION 4 MM	
700	90134-0051		1	SPACING COLLAR DOSING BLOCK	
A3/FLEX TGA 1000SQ, A3/FLEX TGA 0500SQ, A3/FLEX TGA 0750SQ (See drawing on page: 4-268)					
080	1036617-0000		1	BRACKET	
090	1036620-0000		1	SHAFT	
100	256628-0000		1	PIECE	
110	256629-0001		1	AXLE PIN	
120	441706-0000		1	WASHER	
130	1036615-0000		1	SHAFT	
140	1036616-0000		1	WASHER	
150	1036618-0000		1	ROLL	
190	1348671-0000		1	JOINT LEFT	
200	1512316-0000		1	ARM LEFT	
220	1348669-0000		1	SCREW	
300	90134-0058		4	CONNECTION	
320	312105-0453		2	SCREW M6S ISO 4017 M8X25 A480	
330	312318-0289		2	SCREW ISO4029 M4X10 A4	
335	312605-0312		2	HEXAGON NUT, M6M M4 A280	
340	312811-0318		1	NUT HEX.LOCK HELI COIL M8 SS	
350	315105-0165		5	WASHER BRB 8,4X16 RFR	
360	321101-0163		2	FLANGE BUSHING, 10X16X10 MM	
450	90166-0109	MM	600	TUBE 4 MM PA TRANSP.	
470	90134-0052		4	PLUG DOSING BLOCK	
490	90028-0021		5	CONE TUBE 4 MM	
520	90092-0052		4	METERING VALVE 10 MM3	
525	90092-0054		1	METERING VALVE 50 MM3	
530	90028-0020		6	CONE TUBE 2,5MM	
540	90134-0039		9	BUSHING VALVE CONNECTION 2,5 MM	
580	90287-0112		1	SCREW SPRINGLOAD. SLOTTED HEAD M8X16	
610	312625-0318		2	HEXAGON THIN NUT, EN 24035 ML6M M8 A4	
630	312105-0362		1	SCREW M6S ISO 4017 M6X8 A480	
640	315105-0153		1	WASHER BRB 6,4X12 RFR	
660	90166-0109	MM	1000	TUBE 4 MM PA TRANSP.	
670	90134-0031		1	SLEEVE FOR PLASTIC TUBE	
680	90134-0040		1	BUSHING VALVE CONNECTION 4 MM	
700	90134-0051		1	SPACING COLLAR DOSING BLOCK	
Common Parts					
010	2536048-0000		1	ARM	
040	14729-0000		1	NUT	
050	536704-0000		2	WASHER	
060	1036155-0000		1	TOOTH PART	
160	1035788-0000		1	SHAFT	
170	32957-0000		1	SCREW	
180	1037254-0000		6	SHIM	
210	1484320-0000		1	ROD	
230	1038867-0000		1	BOW CLAMP	
240	1037853-0000		1	SHAFT	
370	312145-0287		4	SCREW ISO 2009 MFS M4X8 A4	
380	312635-0320		1	NUT M6M 10X1 STAINLESS A2 80	
390	312115-0465		1	SCREW ISO4762 M8X70 A4 80	
400	312605-0318		1	HEXAGON NUT, M6M M8 A280	
410	312109-0459		1	SCREW M6S ISO 4017 M8X40 A480	
420	312318-0449		2	SCREW ISO4029 M8X16 A4	
430	90166-0143	M	3	TUBE 2,5 MM PA TRANSP.	
440	90266-0019	MM	200	PIPE	
460	90266-0165	MM	100	BRASS PIPE	
480	90134-0038		4	BUSHING/NUT INLET/OUTLET 4 MM	
500	90032-0039		1	BLOCK 4 WAYS	
510	312105-0295		4	SCREW M6S ISO 4017 M4X20 A470	

See previous drawings pages: 4-266, 4-268.

ECM: 345378 - 20080701
Group number: 1348457-0200
Assembly Drawing: 1348457-4_1_AA

This list covers pages from 4-266 to 4-271

Pos	Part No	UN	Qty	Description	Page No
Common Parts (Cont'd)					
550	90032-0040		1	BLOCK 6 WAYS	
600	312105-0455		2	SCREW M6S ISO 4017 M8X30 A480	
650	312812-0318		1	HEXAGON NUT, NY-LOCK M8 A480	

Pos	Part No	UN	Qty	Description	Page No

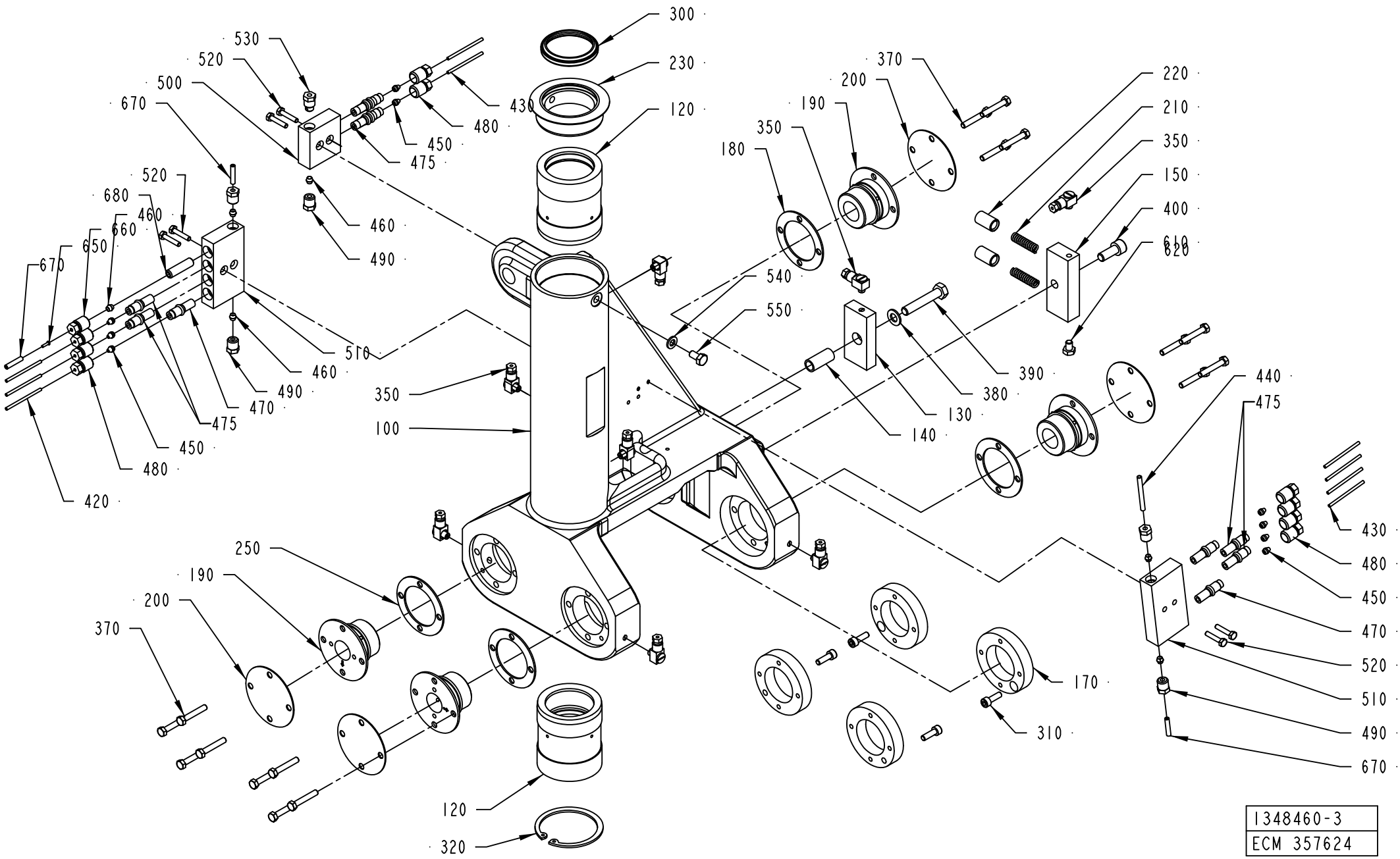

1348460-3
ECM 357624

ECM: 361259 - 20081001
Group number: 1348460-0200
Assembly Drawing: 1348460-3_1_AC

Pos	Part No	UN	Qty	Description	Page No
A3/FLEX					
450	90028-0020		9	CONE TUBE 2,5MM	
460	90028-0021		6	CONE TUBE 4 MM	
470	90092-0052		3	METERING VALVE 10 MM3	
480	90134-0039		9	BUSHING VALVE CONNECTION 2,5 MM	
650	90134-0031		1	SLEEVE FOR PLASTIC TUBE	
660	90134-0040		1	BUSHING VALVE CONNECTION 4 MM	
670	90166-0109	MM	1000	TUBE 4 MM PA TRANSP.	
680	90134-0051		1	SPACING COLLAR DOSING BLOCK	
Common Parts					
100	1195361-0000		1	YOKE RIGHT	
120	2981828-0000		2	BUSHING	
	315259-0102		*1*	*FELT SEAL 22-47 MM*	
130	1037104-0000		1	LOCATING PIECE	
140	1037106-0000		1	SLEEVE	
150	1349972-0000		1	SPRING HOUSING	
170	36753-0000		4	RING	
180	29886-0000		2	LACE	
190	246513-0000		4	BEARING	
200	239874-0000		4	WASHER	
210	20494-0000		2	COMPRESSION SPRING	
220	31838-0000		2	PLUNGER	
230	1349780-0000		1	LID	
250	1038509-0000		2	WASHER	
300	90600-5307		1	SCRAPER, 45X53X7 MM	
310	312115-0329		4	SCREW ISO4762 M5X16 A4 80	
320	315753-0135		1	RETAINING RING FOR BORE DIN 472 60 A2	
350	90134-0058		8	CONNECTION	
370	312105-0335		16	SCREW M6S ISO 4014 M5X30 A480	
380	315105-0165		1	WASHER BRB 8,4X16 RFR	
390	312109-0460		1	SCREW M6S ISO 4017 M8X45 A480	
400	312115-0451		1	SCREW ISO4762 M8X20 A4 80	
410	90166-0109	MM	500	TUBE 4 MM PA TRANSP.	
420	90166-0143	MM	500	TUBE 2,5 MM PA TRANSP.	
430	90266-0019	MM	300	PIPE	
440	90266-0165	MM	500	BRASS PIPE	
475	90092-0054		6	METERING VALVE 50 MM3	
490	90134-0038		5	BUSHING/NUT INLET/OUTLET 4 MM	
500	90032-0038		1	BLOCK 2 WAYS	
510	90032-0039		2	BLOCK 4 WAYS	
520	312105-0295		6	SCREW M6S ISO 4017 M4X20 A470	
530	90087-0019		1	PLUG M10X1 STAINLESS	
540	315105-0153		1	WASHER BRB 6,4X12 RFR	
550	312105-0366		1	SCREW M6S ISO 4017 M6X12 A480	
610	312105-0362		1	SCREW M6S ISO 4017 M6X8 A480	
620	90157-0021		1	LOCKING FLUID LOCTITE 270	

Machine Type Group Description Used-In Group Number Page No

PRESSURE ARM RIGHT

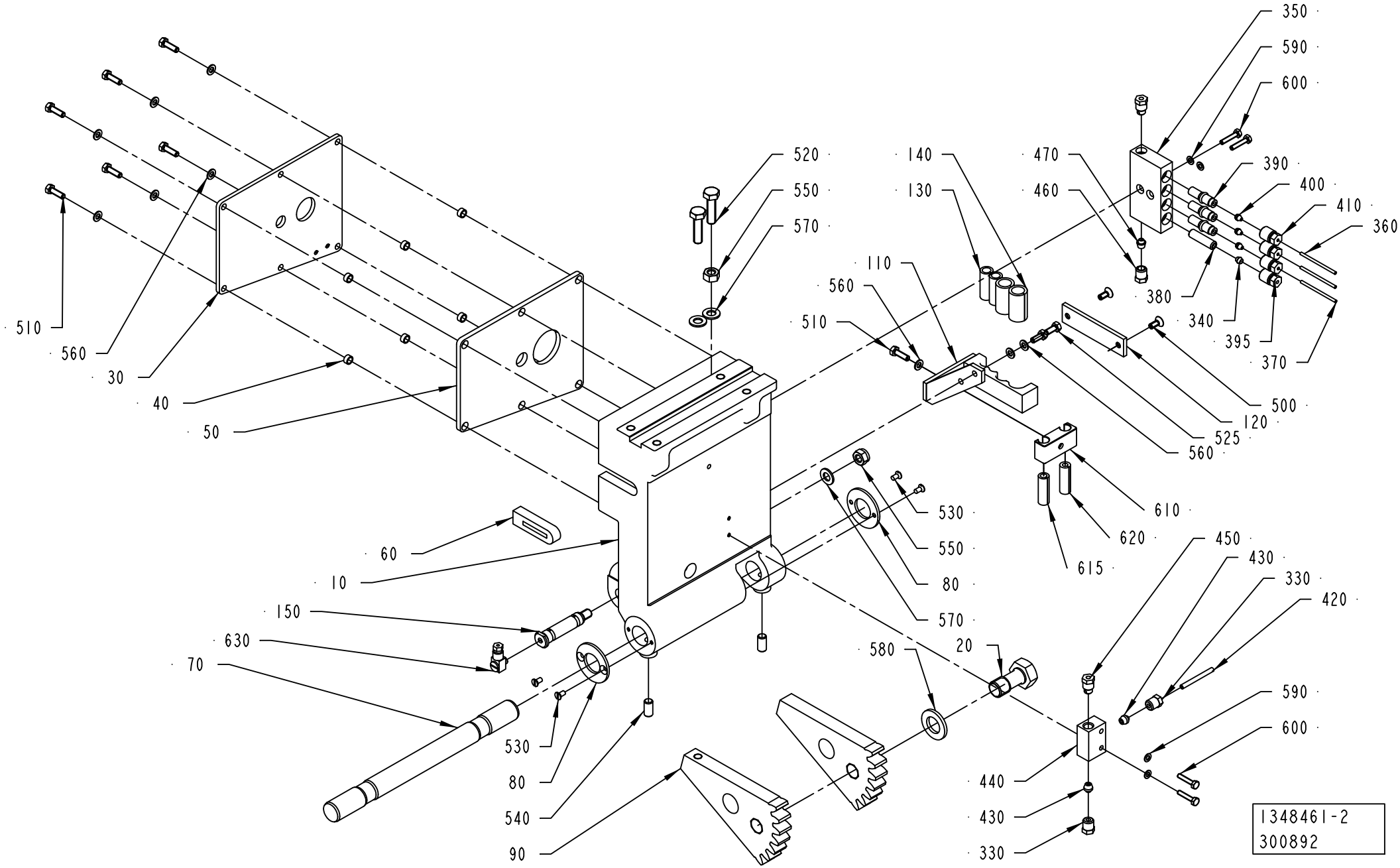

ECM: 387839 - 20090403
Group number: 1348461-0200
Assembly Drawing: 1348461-2_1_AB

This list covers pages from 4-274 to 4-277

Pos	Part No	UN	Qty	Description	Page No
A3/FLEX QC (See drawing on page: 4-276)					
030	1036485-0000		1	COVERING PLATE	
040	1036501-0000		6	SPACER	
050	1036484-0000		1	GASKET	
060	1036483-0000		1	SEAL	
390	90092-0052		1	METERING VALVE 10 MM3	
400	90028-0020		1	CONE TUBE 2,5MM	
510	312105-0329		7	SCREW M6S ISO 4017 M5X16 A480	
560	315105-0146		9	WASHER BRB 5,3X10 RFR	
620	2889947-0000		1	HOSE	
650	90134-0052		2	PLUG DOSING BLOCK	
A3/FLEX NOQC (See drawing on page: 4-274)					
030	1036485-0000		1	COVERING PLATE	
040	1036501-0000		6	SPACER	
050	1036484-0000		1	GASKET	
060	1036483-0000		1	SEAL	
390	90092-0052		3	METERING VALVE 10 MM3	
400	90028-0020		3	CONE TUBE 2,5MM	
510	312105-0329		7	SCREW M6S ISO 4017 M5X16 A480	
560	315105-0146		9	WASHER BRB 5,3X10 RFR	
620	2889947-0000		1	HOSE	
Common Parts					
010	1035878-0000		1	ARM RIGHT	
020	1037069-0000		1	SCREW	
070	1035788-0000		1	SHAFT	
080	536704-0000		2	WASHER	
090	1036156-0000		2	TOOTH PART	
110	1348196-0000		1	FASTENING PLATE	
120	1349868-0000		1	FASTENING PLATE	
130	1478000-0000		2	HOSE	
140	1478001-0000		2	HOSE	
150	1037853-0000		1	SHAFT	
330	90134-0038		2	BUSHING/NUT INLET/OUTLET 4 MM	
340	90028-0021		1	CONE TUBE 4 MM	
350	90032-0039		1	BLOCK 4 WAYS	
360	90166-0143	MM	1500	TUBE 2,5 MM PA TRANSP.	
370	90266-0019	MM	500	PIPE	
380	90134-0051		1	SPACING COLLAR DOSING BLOCK	
395	90134-0040		1	BUSHING VALVE CONNECTION 4 MM	
410	90134-0039		3	BUSHING VALVE CONNECTION 2,5 MM	
420	90266-0165	MM	200	BRASS PIPE	
430	90028-0024		2	CONE TUBE 4 MM	
440	90032-0043		1	DISTRIBUTION BLOCK 3 WAYS	
450	90087-0019		2	PLUG M10X1 STAINLESS	
460	90134-0055		1	BUSHING/NUT INLET/OUTLET 6 MM	
470	90028-0025		1	CONE TUBE 6 MM	
500	312155-0327		2	SCREW DIN 7991 MF6S M5X12 A4 70	
520	312105-0455		2	SCREW M6S ISO 4017 M8X30 A480	
525	312105-0327		2	SCREW M6S ISO 4017 M5X12 A480	
530	312145-0287		4	SCREW ISO 2009 MFS M4X8 A4	
540	312318-0449		2	SCREW ISO4029 M8X16 A4	
550	312605-0318		1	HEXAGON NUT, M6M M8 A280	
570	315105-0165		1	WASHER BRB 8,4X16 RFR	
580	315105-0186		1	WASHER BRB 17X30 RFR	
590	315105-0136		4	WASHER BRB 4,3X8 RFR	
600	312105-0295		4	SCREW M6S ISO 4017 M4X20 A470	
610	2889885-0000		1	BLOCK	
615	2889946-0000		1	HOSE	
630	90134-0058		1	CONNECTION	
640	312812-0318		1	HEXAGON NUT, NY-LOCK M8 A480	

Machine Type | Group Description | Used-In | Group Number | Page No

PRESSURE ARM RIGHT

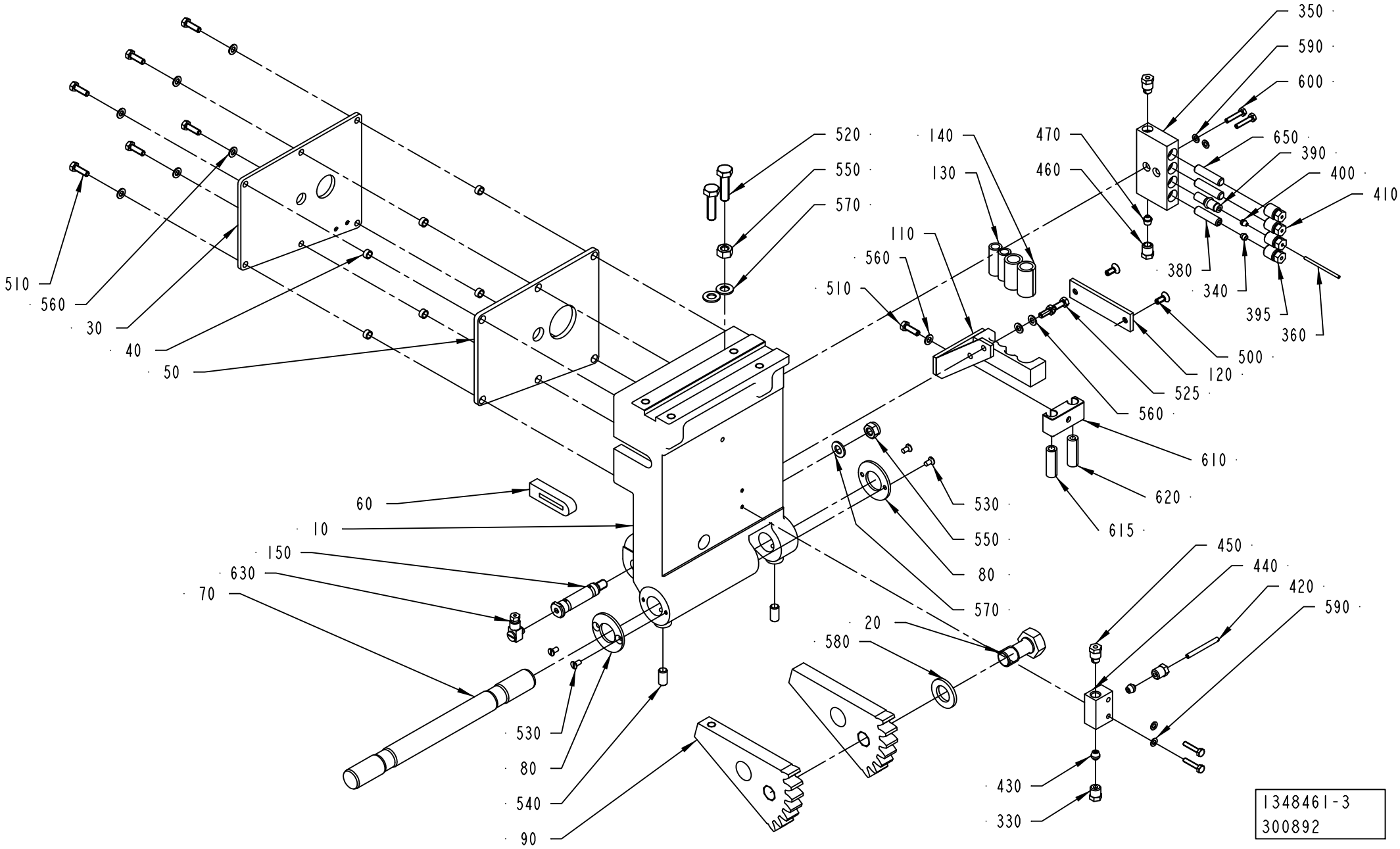

ECM: 387839 - 20090403
Group number: 1348461-0200
Assembly Drawing: 1348461-3_1_AB

This list covers pages from 4-274 to 4-277

Pos	Part No	UN	Qty	Description	Page No
A3/FLEX QC (See drawing on page: 4-276)					
030	1036485-0000		1	COVERING PLATE	
040	1036501-0000		6	SPACER	
050	1036484-0000		1	GASKET	
060	1036483-0000		1	SEAL	
390	90092-0052		1	METERING VALVE 10 MM3	
400	90028-0020		1	CONE TUBE 2,5MM	
510	312105-0329		7	SCREW M6S ISO 4017 M5X16 A480	
560	315105-0146		9	WASHER BRB 5,3X10 RFR	
620	2889947-0000		1	HOSE	
650	90134-0052		2	PLUG DOSING BLOCK	
A3/FLEX NOQC (See drawing on page: 4-274)					
030	1036485-0000		1	COVERING PLATE	
040	1036501-0000		6	SPACER	
050	1036484-0000		1	GASKET	
060	1036483-0000		1	SEAL	
390	90092-0052		3	METERING VALVE 10 MM3	
400	90028-0020		3	CONE TUBE 2,5MM	
510	312105-0329		7	SCREW M6S ISO 4017 M5X16 A480	
560	315105-0146		9	WASHER BRB 5,3X10 RFR	
620	2889947-0000		1	HOSE	
Common Parts					
010	1035878-0000		1	ARM RIGHT	
020	1037069-0000		1	SCREW	
070	1035788-0000		1	SHAFT	
080	536704-0000		2	WASHER	
090	1036156-0000		2	TOOTH PART	
110	1348196-0000		1	FASTENING PLATE	
120	1349868-0000		1	FASTENING PLATE	
130	1478000-0000		2	HOSE	
140	1478001-0000		2	HOSE	
150	1037853-0000		1	SHAFT	
330	90134-0038		2	BUSHING/NUT INLET/OUTLET 4 MM	
340	90028-0021		1	CONE TUBE 4 MM	
350	90032-0039		1	BLOCK 4 WAYS	
360	90166-0143	MM	1500	TUBE 2,5 MM PA TRANSP.	
370	90266-0019	MM	500	PIPE	
380	90134-0051		1	SPACING COLLAR DOSING BLOCK	
395	90134-0040		1	BUSHING VALVE CONNECTION 4 MM	
410	90134-0039		3	BUSHING VALVE CONNECTION 2,5 MM	
420	90266-0165	MM	200	BRASS PIPE	
430	90028-0024		2	CONE TUBE 4 MM	
440	90032-0043		1	DISTRIBUTION BLOCK 3 WAYS	
450	90087-0019		2	PLUG M10X1 STAINLESS	
460	90134-0055		1	BUSHING/NUT INLET/OUTLET 6 MM	
470	90028-0025		1	CONE TUBE 6 MM	
500	312155-0327		2	SCREW DIN 7991 MF6S M5X12 A4 70	
520	312105-0455		2	SCREW M6S ISO 4017 M8X30 A480	
525	312105-0327		2	SCREW M6S ISO 4017 M5X12 A480	
530	312145-0287		4	SCREW ISO 2009 MFS M4X8 A4	
540	312318-0449		2	SCREW ISO4029 M8X16 A4	
550	312605-0318		1	HEXAGON NUT, M6M M8 A280	
570	315105-0165		1	WASHER BRB 8,4X16 RFR	
580	315105-0186		1	WASHER BRB 17X30 RFR	
590	315105-0136		4	WASHER BRB 4,3X8 RFR	
600	312105-0295		4	SCREW M6S ISO 4017 M4X20 A470	
610	2889885-0000		1	BLOCK	
615	2889946-0000		1	HOSE	
630	90134-0058		1	CONNECTION	
640	312812-0318		1	HEXAGON NUT, NY-LOCK M8 A480	

Machine Type | Group Description | Used-In | Group Number | Page No

CUTTING ARM RIGHT

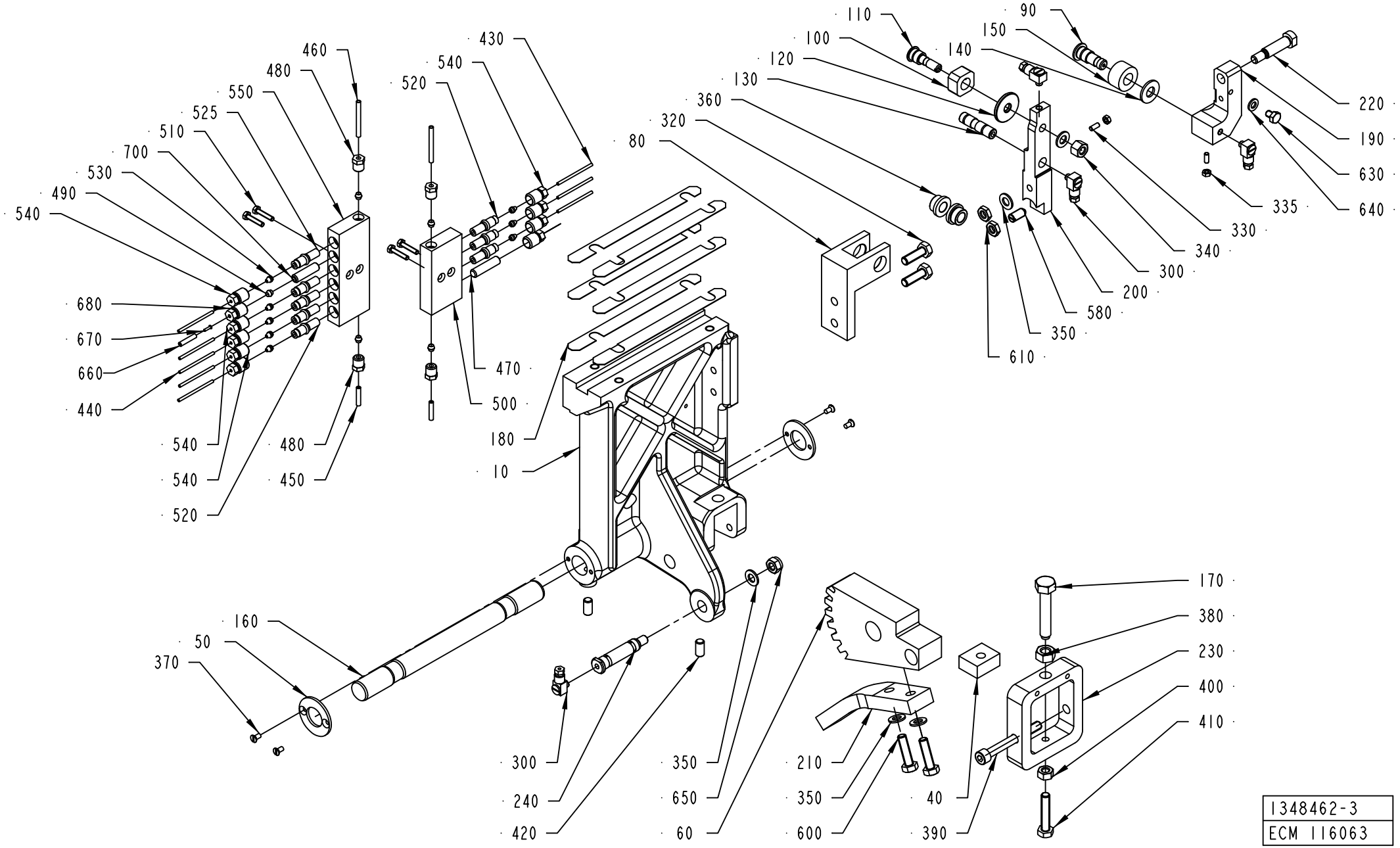

1348462-3
ECM 116063

ECM: 345380 - 20080701
Group number: 1348462-0200
Assembly Drawing: 1348462-3_1_AA

This list covers pages from 4-278 to 4-283

Pos	Part No	UN	Qty	Description	Page No
A3/FLEX NOQC (See drawing on page: 4-278)					
080	1036617-0000		1	BRACKET	
090	1036620-0000		1	SHAFT	
100	256628-0000		1	PIECE	
110	256629-0001		1	AXLE PIN	
120	441706-0000		1	WASHER	
130	1036615-0000		1	SHAFT	
140	1036616-0000		1	WASHER	
150	1036618-0000		1	ROLL	
190	1348672-0000		1	JOINT RIGHT	
200	1512315-0000		1	ARM RIGHT	
220	1348669-0000		1	SCREW	
300	90134-0058		4	CONNECTION	
320	312105-0453		2	SCREW M6S ISO 4017 M8X25 A480	
330	312318-0289		2	SCREW ISO4029 M4X10 A4	
335	312605-0312		2	HEXAGON NUT, M6M M4 A280	
340	312811-0318		1	NUT HEX.LOCK HELI COIL M8 SS	
350	315105-0165		5	WASHER BRB 8,4X16 RFR	
360	321101-0163		2	FLANGE BUSHING, 10X16X10 MM	
450	90166-0109	MM	600	TUBE 4 MM PA TRANSP.	
470	90134-0052		1	PLUG DOSING BLOCK	
490	90028-0021		5	CONE TUBE 4 MM	
520	90092-0052		7	METERING VALVE 10 MM3	
525	90092-0054		1	METERING VALVE 50 MM3	
530	90028-0020		8	CONE TUBE 2,5MM	
540	90134-0039		9	BUSHING VALVE CONNECTION 2,5 MM	
580	90287-0112		1	SCREW SPRINGLOAD. SLOTTED HEAD M8X16	
610	312625-0318		2	HEXAGON THIN NUT, EN 24035 ML6M M8 A4	
630	312105-0362		1	SCREW M6S ISO 4017 M6X8 A480	
640	315105-0153		1	WASHER BRB 6,4X12 RFR	
660	90166-0109	MM	1000	TUBE 4 MM PA TRANSP.	
670	90134-0031		1	SLEEVE FOR PLASTIC TUBE	
680	90134-0040		1	BUSHING VALVE CONNECTION 4 MM	
700	90134-0051		1	SPACING COLLAR DOSING BLOCK	
A3/FLEX TBA 0250SQ QC, A3/FLEX TBA 0200SQ QC (See drawing on page: 4-280)					
080	1338793-0000		1	BRACKET	
090	1036620-0000		1	SHAFT	
100	256628-0000		1	PIECE	
110	256629-0001		1	AXLE PIN	
120	441706-0000		1	WASHER	
130	1036615-0000		1	SHAFT	
140	1036616-0000		1	WASHER	
150	1036618-0000		1	ROLL	
190	1348672-0000		1	JOINT RIGHT	
200	2682198-0000		1	ARM	
220	1348669-0000		1	SCREW	
300	90134-0058		4	CONNECTION	
320	312105-0453		2	SCREW M6S ISO 4017 M8X25 A480	
330	312318-0289		2	SCREW ISO4029 M4X10 A4	
335	312605-0312		2	HEXAGON NUT, M6M M4 A280	
340	312811-0318		1	NUT HEX.LOCK HELI COIL M8 SS	
350	315105-0165		5	WASHER BRB 8,4X16 RFR	
360	321101-0163		2	FLANGE BUSHING, 10X16X10 MM	
450	90166-0109	MM	600	TUBE 4 MM PA TRANSP.	
470	90134-0052		3	PLUG DOSING BLOCK	
490	90028-0021		5	CONE TUBE 4 MM	
520	90092-0052		5	METERING VALVE 10 MM3	
525	90092-0054		1	METERING VALVE 50 MM3	
530	90028-0020		6	CONE TUBE 2,5MM	
540	90134-0039		9	BUSHING VALVE CONNECTION 2,5 MM	
580	90287-0112		1	SCREW SPRINGLOAD. SLOTTED HEAD M8X16	
610	312625-0318		2	HEXAGON THIN NUT, EN 24035 ML6M M8 A4	
630	312105-0362		1	SCREW M6S ISO 4017 M6X8 A480	
640	315105-0153		1	WASHER BRB 6,4X12 RFR	
660	90166-0109	MM	1000	TUBE 4 MM PA TRANSP.	
670	90134-0031		1	SLEEVE FOR PLASTIC TUBE	
680	90134-0040		1	BUSHING VALVE CONNECTION 4 MM	
700	90134-0051		1	SPACING COLLAR DOSING BLOCK	
A3/FLEX TBA 0500B QC, A3/FLEX TBA 1000B QC, A3/FLEX TBA 0250B QC, A3/FLEX TBA 0200B QC, A3/FLEX TBA 0330S QC, A3/FLEX TBA 1890S QC, A3/FLEX TBA 2000S QC, A3/FLEX TBA 0200M QC, A3/FLEX TBA 0250S QC, A3/FLEX TPA 1000SQ QC, A3/FLEX TPA 0750SQ QC, A3/FLEX TPA 0200SQ QC, A3/FLEX TPA 0250SQ QC, A3/FLEX TBA 0500SQ QC, A3/FLEX TBA 1000SQ QC (See drawing on page: 4-280)					
080	1036617-0000		1	BRACKET	
090	1036620-0000		1	SHAFT	
100	256628-0000		1	PIECE	
110	256629-0001		1	AXLE PIN	
120	441706-0000		1	WASHER	
130	1036615-0000		1	SHAFT	
140	1036616-0000		1	WASHER	
150	1036618-0000		1	ROLL	
190	1348672-0000		1	JOINT RIGHT	
200	1512315-0000		1	ARM RIGHT	
220	1348669-0000		1	SCREW	

Machine Type | Group Description | Used-In | Group Number | Page No

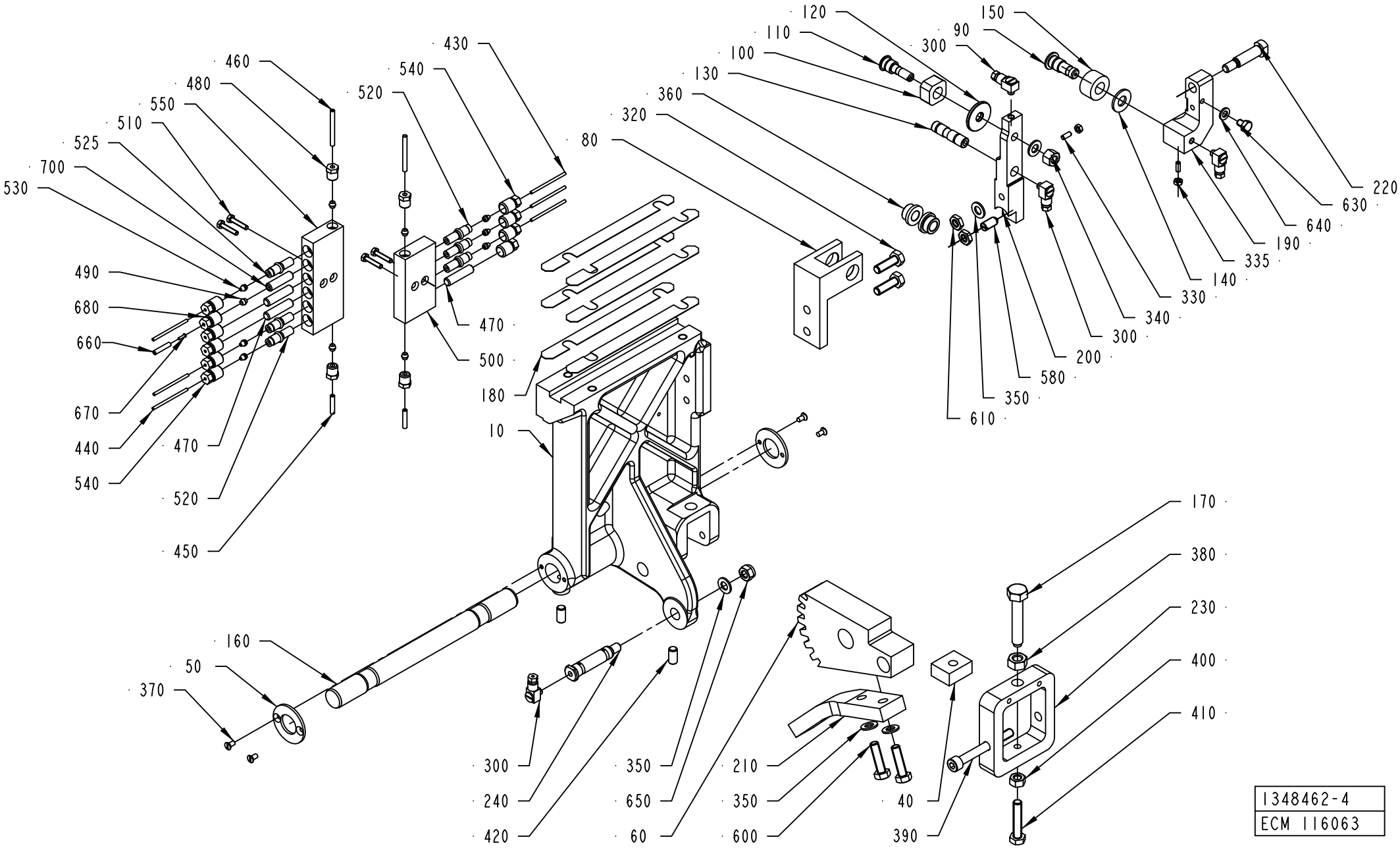
460
480
550
510
525
700
530
490
680
660
670
440
540
520
450
430
540
520
470
500
180
10
80
120
110
100
130
360
320
150
90
300
220
630
640
190
335
140
330
340
300
200
580
350
610
160
50
370
300
240
420
350
650
60
210
350
600
40
390
170
380
230
400
410
1348462-4
ECM 116063

ECM: 345380 - 20080701
Group number: 1348462-0200
Assembly Drawing: 1348462-4_1_AA

This list covers pages from 4-278 to 4-283

Pos	Part No	UN	Qty	Description	Page No
A3/FLEX TBA 0500B QC, A3/FLEX TBA 1000B QC, A3/FLEX TBA 0250B QC, A3/FLEX TBA 0200B QC, A3/FLEX TBA 0330S QC, A3/FLEX TBA 1890S QC, A3/FLEX TBA 2000S QC, A3/FLEX TBA 0200M QC, A3/FLEX TBA 0250S QC, A3/FLEX TPA 1000SQ QC, A3/FLEX TPA 0750SQ QC, A3/FLEX TPA 0200SQ QC, A3/FLEX TPA 0250SQ QC, A3/FLEX TBA 0500SQ QC, A3/FLEX TBA 1000SQ QC (Cont'd) (See drawing on page: 4-280)					
300	90134-0058		4	CONNECTION	
320	312105-0453		2	SCREW M6S ISO 4017 M8X25 A480	
330	312318-0289		2	SCREW ISO4029 M4X10 A4	
335	312605-0312		2	HEXAGON NUT, M6M M4 A280	
340	312811-0318		1	NUT HEX.LOCK HELI COIL M8 SS	
350	315105-0165		5	WASHER BRB 8,4X16 RFR	
360	321101-0163		2	FLANGE BUSHING, 10X16X10 MM	
450	90166-0109	MM	600	TUBE 4 MM PA TRANSP.	
470	90134-0052		3	PLUG DOSING BLOCK	
490	90028-0021		5	CONE TUBE 4 MM	
520	90092-0052		5	METERING VALVE 10 MM3	
525	90092-0054		1	METERING VALVE 50 MM3	
530	90028-0020		6	CONE TUBE 2,5MM	
540	90134-0039		9	BUSHING VALVE CONNECTION 2,5 MM	
580	90287-0112		1	SCREW SPRINGLOAD. SLOTTED HEAD M8X16	
610	312625-0318		2	HEXAGON THIN NUT, EN 24035 ML6M M8 A4	
630	312105-0362		1	SCREW M6S ISO 4017 M6X8 A480	
640	315105-0153		1	WASHER BRB 6,4X12 RFR	
660	90166-0109	MM	1000	TUBE 4 MM PA TRANSP.	
670	90134-0031		1	SLEEVE FOR PLASTIC TUBE	
680	90134-0040		1	BUSHING VALVE CONNECTION 4 MM	
700	90134-0051		1	SPACING COLLAR DOSING BLOCK	
A3/FLEX TBA 1400B (See drawing on page: 4-280)					
080	1036617-0000		1	BRACKET	
090	1036620-0000		1	SHAFT	
100	256628-0000		1	PIECE	
110	256629-0001		1	AXLE PIN	
120	441706-0000		1	WASHER	
130	1036615-0000		1	SHAFT	
140	1036616-0000		1	WASHER	
150	1036618-0000		1	ROLL	
190	1348672-0000		1	JOINT RIGHT	
200	1512315-0000		1	ARM RIGHT	
220	1348669-0000		1	SCREW	
300	90134-0058		4	CONNECTION	
320	312105-0453		2	SCREW M6S ISO 4017 M8X25 A480	
330	312318-0289		2	SCREW ISO4029 M4X10 A4	
335	312605-0312		2	HEXAGON NUT, M6M M4 A280	
340	312811-0318		1	NUT HEX.LOCK HELI COIL M8 SS	
350	315105-0165		5	WASHER BRB 8,4X16 RFR	
360	321101-0163		2	FLANGE BUSHING, 10X16X10 MM	
450	90166-0109	MM	600	TUBE 4 MM PA TRANSP.	
490	90028-0021		5	CONE TUBE 4 MM	
520	90092-0052		5	METERING VALVE 10 MM3	
525	90092-0054		1	METERING VALVE 50 MM3	
530	90028-0020		6	CONE TUBE 2,5MM	
540	90134-0039		9	BUSHING VALVE CONNECTION 2,5 MM	
580	90287-0112		1	SCREW SPRINGLOAD. SLOTTED HEAD M8X16	
610	312625-0318		2	HEXAGON THIN NUT, EN 24035 ML6M M8 A4	
630	312105-0362		1	SCREW M6S ISO 4017 M6X8 A480	
640	315105-0153		1	WASHER BRB 6,4X12 RFR	
660	90166-0109	MM	1000	TUBE 4 MM PA TRANSP.	
670	90134-0031		1	SLEEVE FOR PLASTIC TUBE	
680	90134-0040		1	BUSHING VALVE CONNECTION 4 MM	
700	90134-0051		1	SPACING COLLAR DOSING BLOCK	
A3/FLEX TGA 1000SQ, A3/FLEX TGA 0500SQ, A3/FLEX TGA 0750SQ (See drawing on page: 4-280)					
080	1036617-0000		1	BRACKET	
090	1036620-0000		1	SHAFT	
100	256628-0000		1	PIECE	
110	256629-0001		1	AXLE PIN	
120	441706-0000		1	WASHER	
130	1036615-0000		1	SHAFT	
140	1036616-0000		1	WASHER	
150	1036618-0000		1	ROLL	
190	1348672-0000		1	JOINT RIGHT	
200	1512315-0000		1	ARM RIGHT	
220	1348669-0000		1	SCREW	
300	90134-0058		4	CONNECTION	
320	312105-0453		2	SCREW M6S ISO 4017 M8X25 A480	
330	312318-0289		2	SCREW ISO4029 M4X10 A4	
335	312605-0312		2	HEXAGON NUT, M6M M4 A280	
340	312811-0318		1	NUT HEX.LOCK HELI COIL M8 SS	
350	315105-0165		5	WASHER BRB 8,4X16 RFR	
360	321101-0163		2	FLANGE BUSHING, 10X16X10 MM	
450	90166-0109	MM	600	TUBE 4 MM PA TRANSP.	
470	90134-0052		4	PLUG DOSING BLOCK	
490	90028-0021		5	CONE TUBE 4 MM	
520	90092-0052		4	METERING VALVE 10 MM3	
525	90092-0054		1	METERING VALVE 50 MM3	

Machine Type | Group Description | Used-In | Group Number | Page No

See previous drawings pages: 4-278, 4-280.

Pos	Part No	UN	Qty	Description	Page No
A3/FLEX TGA 1000SQ, A3/FLEX TGA 0500SQ, A3/FLEX TGA 0750SQ (Cont'd) (See drawing on page: 4-280)					
530	90028-0020		6	CONE TUBE 2,5MM	
540	90134-0039		9	BUSHING VALVE CONNECTION 2,5 MM	
580	90287-0112		1	SCREW SPRINGLOAD. SLOTTED HEAD M8X16	
610	312625-0318		2	HEXAGON THIN NUT, EN 24035 ML6M M8 A4	
630	312105-0362		1	SCREW M6S ISO 4017 M6X8 A480	
640	315105-0153		1	WASHER BRB 6,4X12 RFR	
660	90166-0109	MM	1000	TUBE 4 MM PA TRANSP.	
670	90134-0031		1	SLEEVE FOR PLASTIC TUBE	
680	90134-0040		1	BUSHING VALVE CONNECTION 4 MM	
700	90134-0051		1	SPACING COLLAR DOSING BLOCK	
Common Parts					
010	2536047-0000		1	ARM	
040	14729-0000		1	NUT	
050	536704-0000		2	WASHER	
060	1036155-0000		1	TOOTH PART	
160	1035788-0000		1	SHAFT	
170	32957-0000		1	SCREW	
180	1037254-0000		6	SHIM	
210	1484320-0000		1	ROD	
230	1038867-0000		1	BOW CLAMP	
240	1037853-0000		1	SHAFT	
370	312145-0287		4	SCREW ISO 2009 MFS M4X8 A4	
380	312635-0320		1	NUT M6M 10X1 STAINLESS A2 80	
390	312115-0465		1	SCREW ISO4762 M8X70 A4 80	
400	312605-0318		1	HEXAGON NUT, M6M M8 A280	
410	312109-0459		1	SCREW M6S ISO 4017 M8X40 A480	
420	312318-0449		2	SCREW ISO4029 M8X16 A4	
430	90166-0143	M	3	TUBE 2,5 MM PA TRANSP.	
440	90266-0019	MM	200	PIPE	
460	90266-0165	MM	100	BRASS PIPE	
480	90134-0038		4	BUSHING/NUT INLET/OUTLET 4 MM	
500	90032-0039		1	BLOCK 4 WAYS	
510	312105-0295		4	SCREW M6S ISO 4017 M4X20 A470	
550	90032-0040		1	BLOCK 6 WAYS	
600	312105-0455		2	SCREW M6S ISO 4017 M8X30 A480	
650	312812-0318		1	HEXAGON NUT, NY-LOCK M8 A480	

Pos	Part No	UN	Qty	Description	Page No

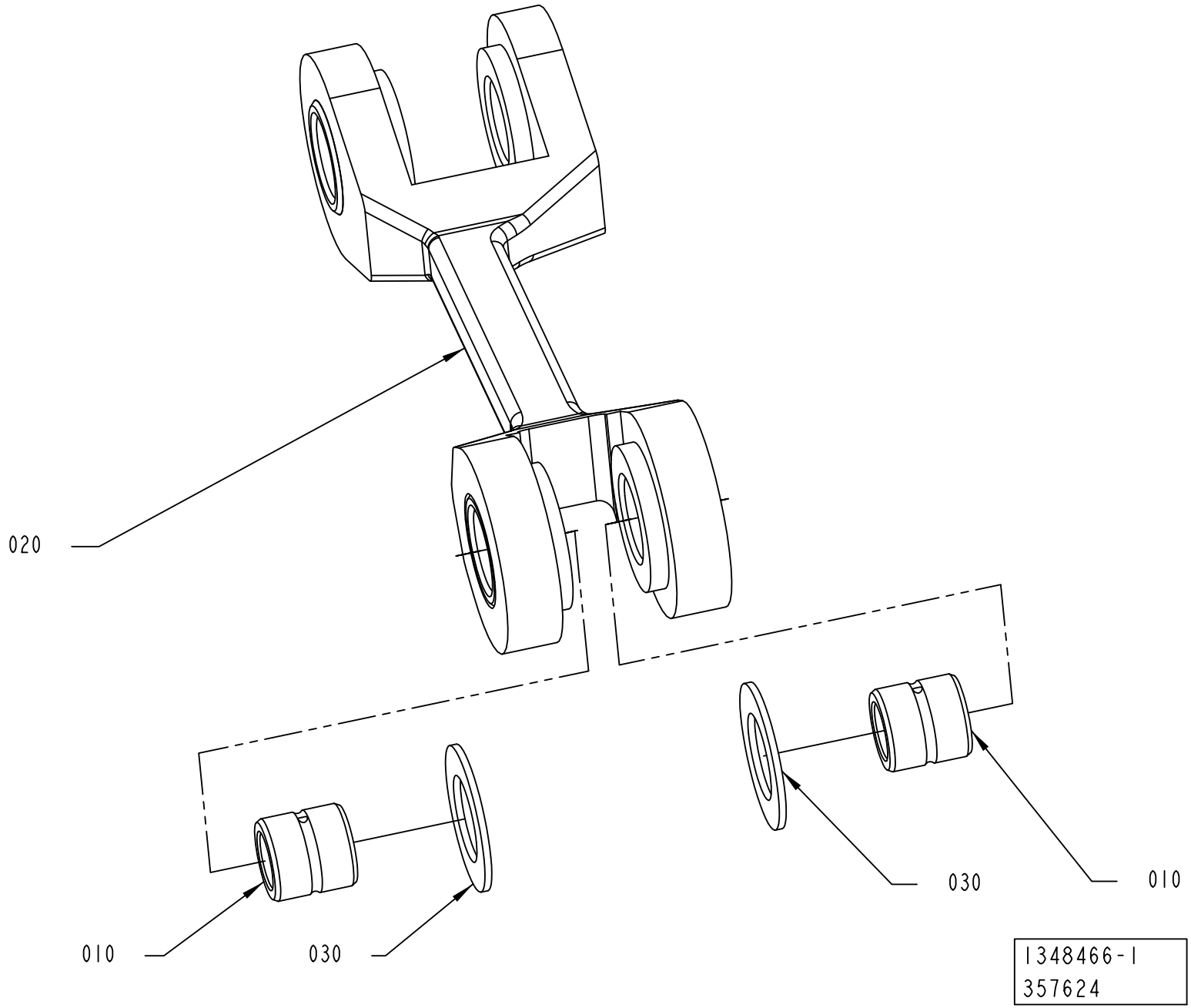
020
010
030
030
010
1348466-1
357624

ECM: 383310 - 20090114
Group number: 1348466-0100
Assembly Drawing: 1348466-1_1_AB

Pos	Part No	UN	Qty	Description	Page No
-					
010	2983172-0000		2	SLEEVE	
020	2961956-0000		1	LINK	
030	1038021-0000		2	WASHER	

Pos	Part No	UN	Qty	Description	Page No

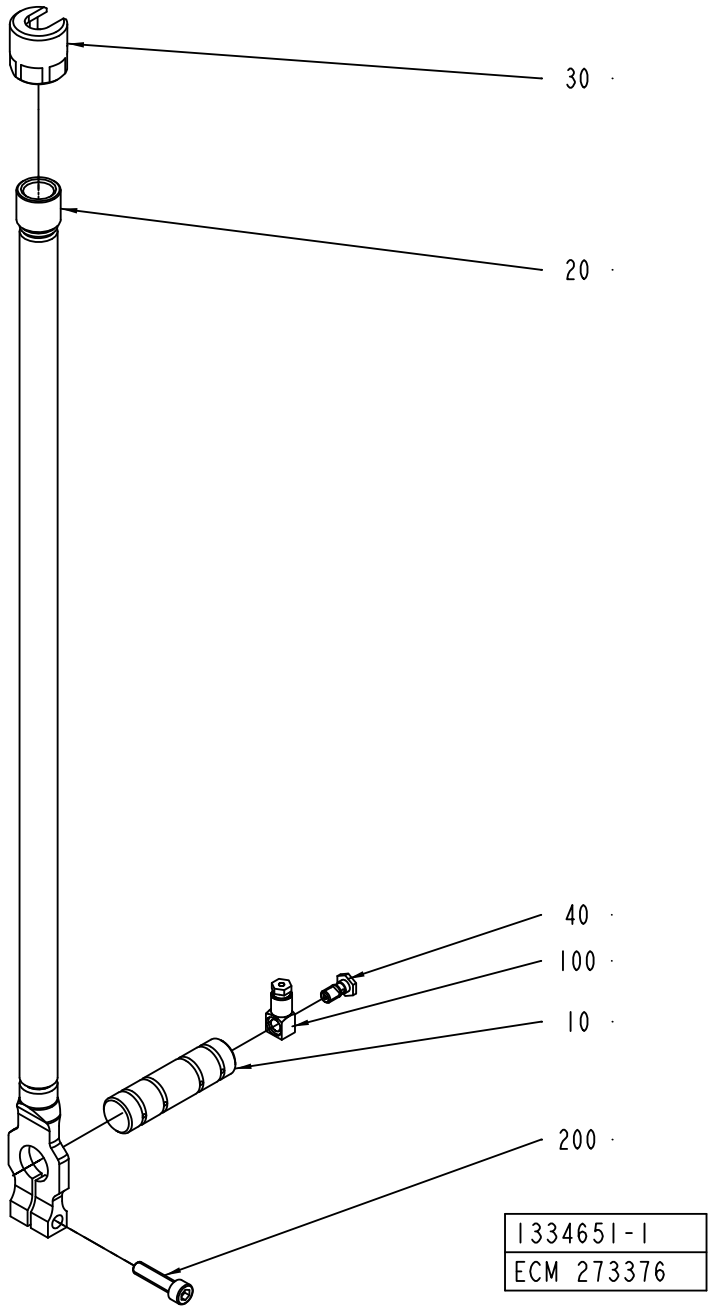
30
20
40
100
10
200
1334651-1
ECM 273376

ECM: 361257 - 20081001
Group number: 1334651-0100
Assembly Drawing: 1334651-1_1_AB

Pos	Part No	UN	Qty	Description	Page No
-					
010	2983173-0000		1	SHAFT	
020	1334652-0000		1	LINK	
030	1334654-0000		1	CONNECTION CLAMP	
040	1334659-0000		1	SCREW	
100	90134-0058		1	CONNECTION	
200	312115-0372		1	SCREW ISO4762 M6X25 A4 80	

Pos	Part No	UN	Qty	Description	Page No

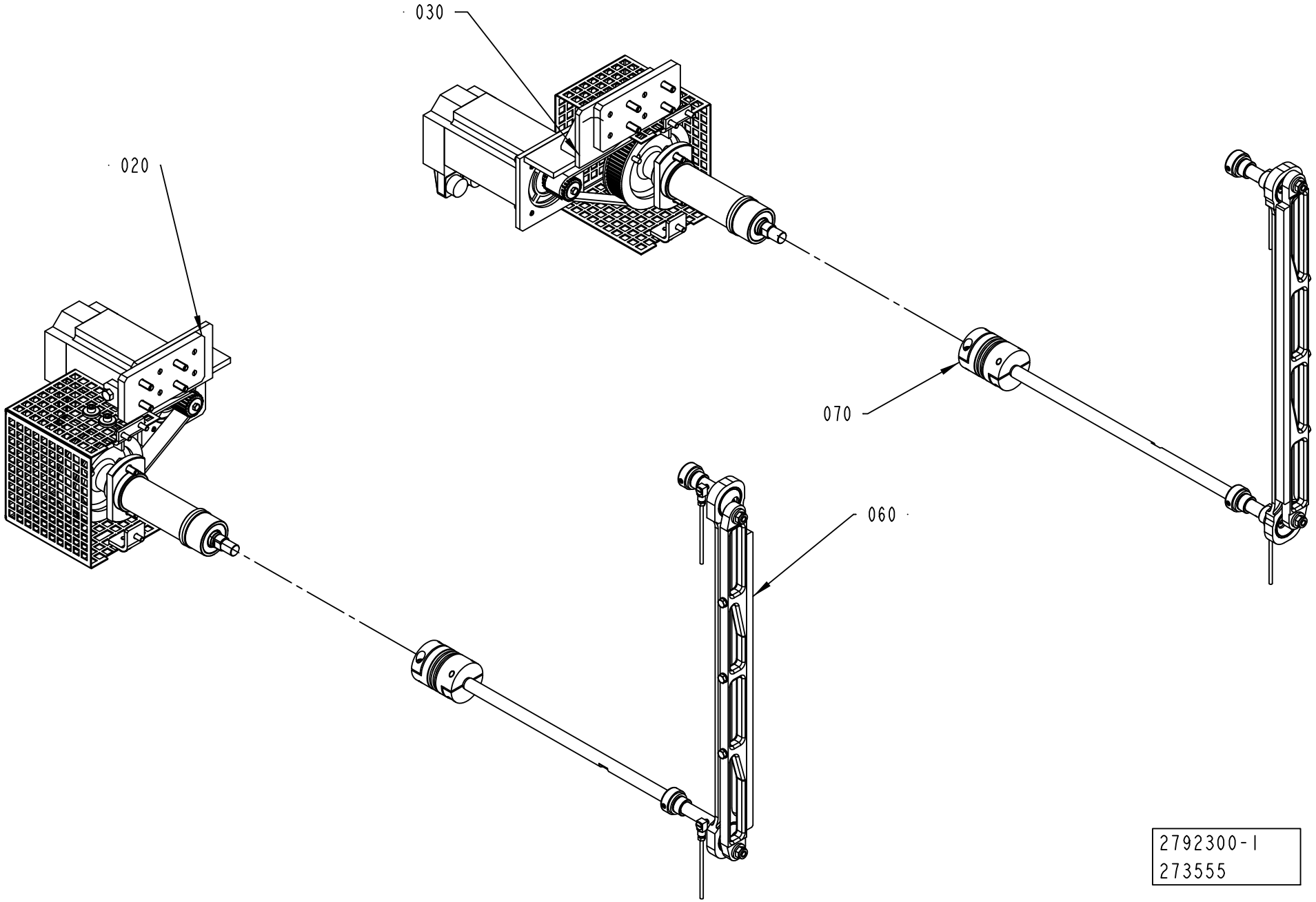
030
020
070
060
2792300-1
273555

ECM: 273560 - 20061101
Group number: 2792300-0100
Assembly Drawing: 2792300-1_1_AA

Pos	Part No	UN	Qty	Description	Page No
-					
020	2792301-0100		1	DRIVE UNIT	**4-291**
030	2792302-0100		1	DRIVE UNIT	**4-293**
060	2503665-0100		1	DESIGN CORRECTION DEVICE LEFT	**4-295**
070	2503666-0100		1	DESIGN CORRECTION DEVICE RIGHT	**4-297**

Pos	Part No	UN	Qty	Description	Page No

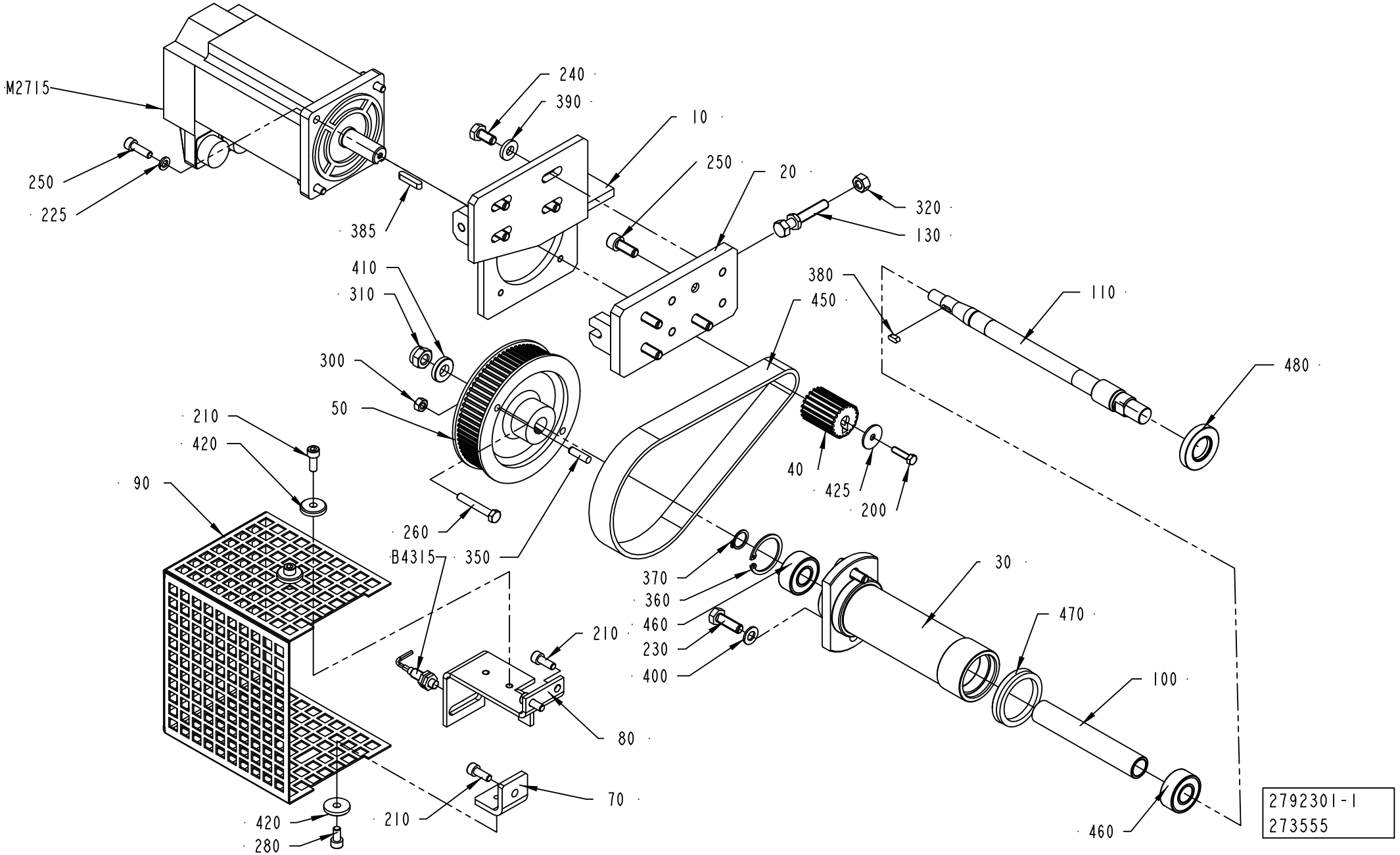
M2715
250
225
240
390
385
10
250
20
320
130
410
310
300
50
210
420
90
260
B4315
350
380
450
110
480
40
425
200
370
360
460
230
400
30
470
100
210
80
70
420
280
210
460
2792301-1
273555

ECM: 383391 - 20090402
Group number: 2792301-0100
Assembly Drawing: 2792301-1_1_AA

Pos	Part No	UN	Qty	Description	Page No
-					
010	2792304-0000		1	PLATE	
020	2650713-0000		1	PLATE	
030	2506334-0000		1	SUPPORT	
040	2792306-0000		1	TOOTHED PULLEY	
050	2652891-0000		1	TOOTHED PULLEY	
070	2506337-0000		1	ANGLE BRACKET	
080	2683976-0000		1	SUPPORT	
090	2506336-0000		1	PROTECTIVE COVER	
100	2506392-0000		1	SPACER	
110	2506338-0000		1	SHAFT	
130	2650717-0000		1	SCREW	
200	312105-0331		1	SCREW M6S ISO 4017 M5X20 A480	
210	312115-0368		5	SCREW ISO4762 M6X16 A4 80	
225	315402-0156		4	LOCK WASHER FBB 6,5	
230	312105-0453		2	SCREW M6S ISO 4017 M8X25 A480	
240	312105-0449		8	SCREW M6S ISO 4017 M8X16 A480	
250	312115-0370		4	SCREW ISO4762 M6X20 A4 80	
260	312109-0378		1	SCREW M6S ISO 4017 M6X40 A480	
280	312115-0366		2	SCREW ISO4762 M6X12 A4 80	
300	312605-0316		1	HEXAGON NUT, M6M M6 A280	
310	312812-0320		1	HEXAGON NUT, NY-LOCK M10 A480	
320	312605-0318		1	HEXAGON NUT, M6M M8 A280	
350	311103-0354		1	PARALLEL PIN ISO 2338 6M6X22 A1	
360	315753-0124		1	RETAINING RING FOR BORE DIN 472 35 A2	
370	315751-0112		1	RETAINING RING FOR SHAFT DIN 471 15 SS	
380	315701-0165		1	PARALLEL KEY W. ROUND ENDS 4X4X10 MM	
385	315701-0205		1	PARALLEL KEY W. ROUND ENDS 5X5X30 MM	
390	1558447-0000		4	SPACER	
400	315105-0165		2	WASHER BRB 8,4X16 RFR	
410	315115-0173		1	WASHER PLAIN, TBRB 10,5/22 H=4	
420	315125-0153		3	WASHER TBRSB 6,4X22X4 A4	
425	90005-0125		1	WASHER PLAIN ROUND 5,5/22, H=1,5 FZB	
450	90459-3759		1	TIMING BELT 5MR-550-25	
460	90214-0194		2	SPHERICAL BALL BEARING, 15X35X1 MM	
470	90091-0138		1	V-RINGS 40X50X9 MM V-45A	
480	90091-0436		1	RADIAL SEAL 20X40X7 MM DUST LIP	
B4315	90458-0138		1	PROX.SWITCH E2EG-X1R5B1-5M	
M2715	90459-7178		1	SERVO MOTOR MPL-B330P-SJ24AA	

Pos	Part No	UN	Qty	Description	Page No

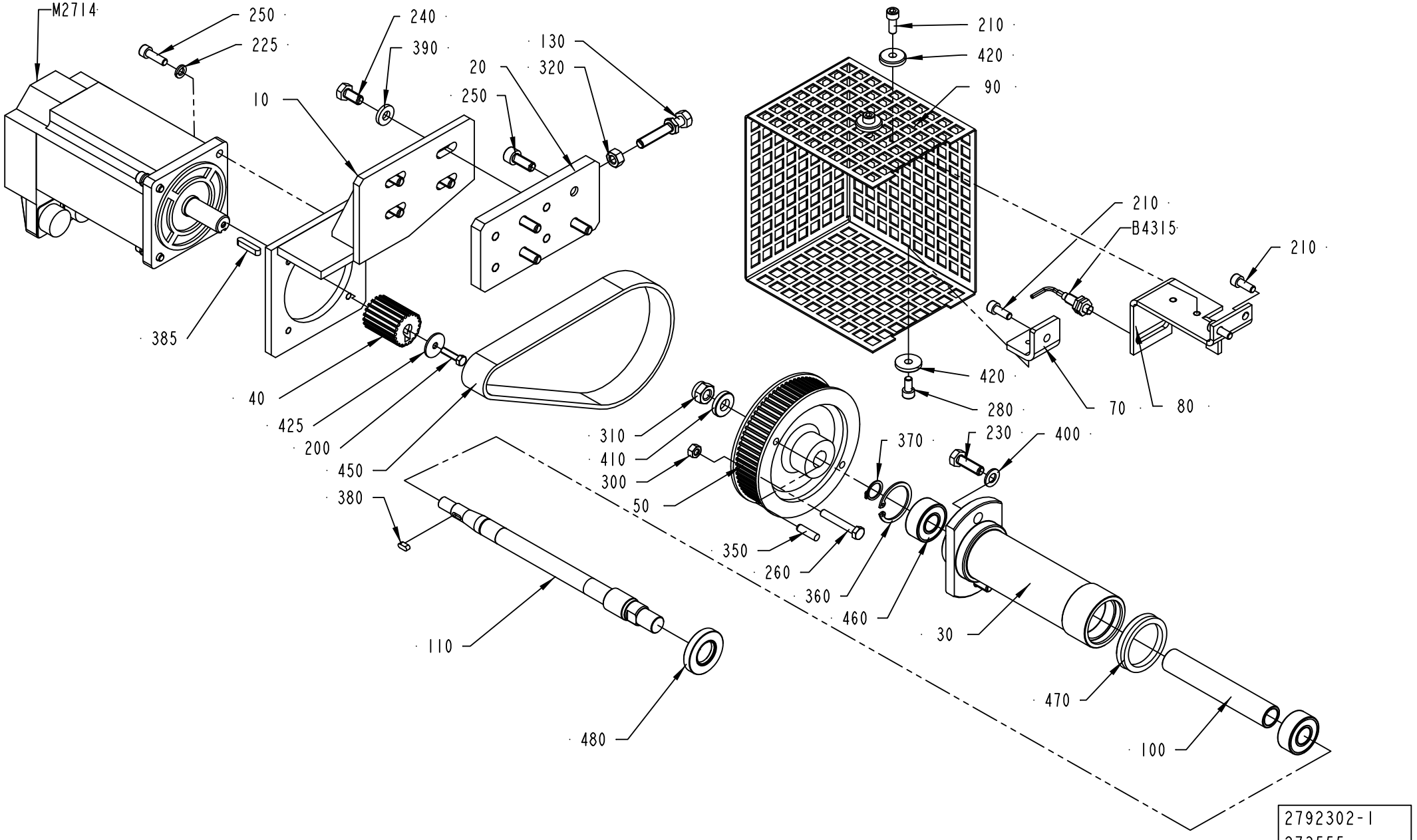
M2714
250
225
240
390
130
320
20
250
10
385
40
425
200
450
380
110
480
310
410
300
50
350
260
360
460
370
230
400
30
470
100
210
420
90
210
B4315
210
420
280
70
80
2792302-1
273555

ECM: 383390 - 20090402
Group number: 2792302-0100
Assembly Drawing: 2792302-1_1_AA

Pos	Part No	UN	Qty	Description	Page No
-					
010	2792305-0000		1	PLATE	
020	2650713-0000		1	PLATE	
030	2506334-0000		1	SUPPORT	
040	2792306-0000		1	TOOTHED PULLEY	
050	2652891-0000		1	TOOTHED PULLEY	
070	2506337-0000		1	ANGLE BRACKET	
080	2683976-0000		1	SUPPORT	
090	2506336-0000		1	PROTECTIVE COVER	
100	2506392-0000		1	SPACER	
110	2506338-0000		1	SHAFT	
130	2650717-0000		1	SCREW	
200	312105-0331		1	SCREW M6S ISO 4017 M5X20 A480	
210	312115-0368		5	SCREW ISO4762 M6X16 A4 80	
225	315402-0156		4	LOCK WASHER FBB 6,5	
230	312105-0453		2	SCREW M6S ISO 4017 M8X25 A480	
240	312105-0449		4	SCREW M6S ISO 4017 M8X16 A480	
250	312115-0370		8	SCREW ISO4762 M6X20 A4 80	
260	312109-0378		1	SCREW M6S ISO 4017 M6X40 A480	
280	312115-0366		2	SCREW ISO4762 M6X12 A4 80	
300	312605-0316		1	HEXAGON NUT, M6M M6 A280	
310	312812-0320		1	HEXAGON NUT, NY-LOCK M10 A480	
320	312605-0318		1	HEXAGON NUT, M6M M8 A280	
350	311103-0354		1	PARALLEL PIN ISO 2338 6M6X22 A1	
360	315753-0124		1	RETAINING RING FOR BORE DIN 472 35 A2	
370	315751-0112		1	RETAINING RING FOR SHAFT DIN 471 15 SS	
380	315701-0165		1	PARALLEL KEY W. ROUND ENDS 4X4X10 MM	
385	315701-0203		1	PARALLEL KEY W. ROUND ENDS 5X5X25 MM	
390	1558447-0000		4	SPACER	
400	315105-0165		2	WASHER BRB 8,4X16 RFR	
410	315115-0173		1	WASHER PLAIN, TBRB 10,5/22 H=4	
420	315125-0153		3	WASHER TBRSB 6,4X22X4 A4	
425	90005-0125		1	WASHER PLAIN ROUND 5,5/22, H=1,5 FZB	
450	90459-3759		1	TIMING BELT 5MR-550-25	
460	90214-0194		2	SPHERICAL BALL BEARING, 15X35X1 MM	
470	90091-0138		1	V-RINGS 40X50X9 MM V-45A	
480	90091-0436		1	RADIAL SEAL 20X40X7 MM DUST LIP	
B4315	90458-0138		1	PROX.SWITCH E2EG-X1R5B1-5M	
M2714	90459-7178		1	SERVO MOTOR MPL-B330P-SJ24AA	

Pos	Part No	UN	Qty	Description	Page No

DESIGN CORRECTION DEVICE LEFT

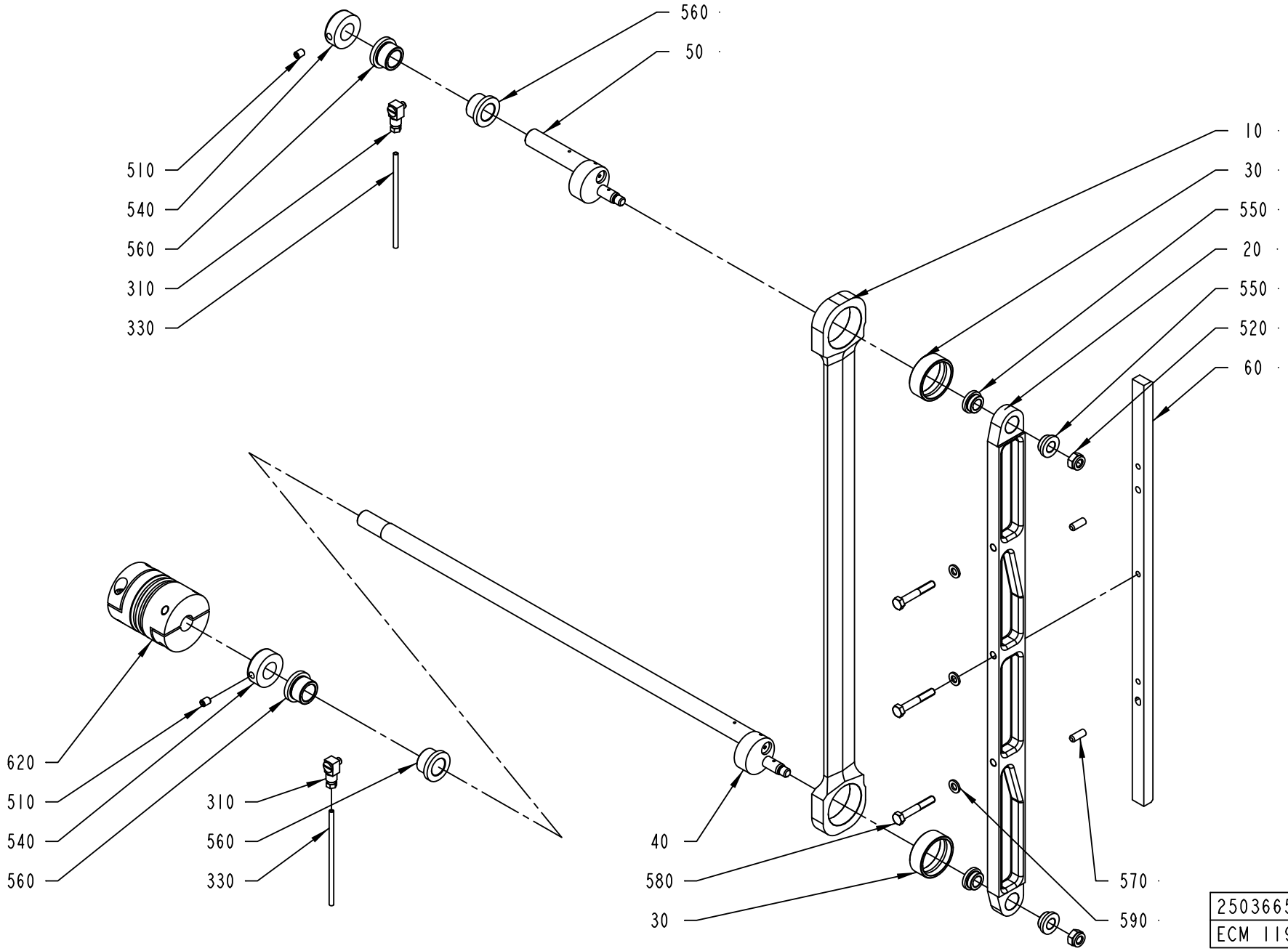

ECM: 383395 - 20090402
Group number: 2503665-0100
Assembly Drawing: 2503665-1_1_AA

Pos	Part No	UN	Qty	Description	Page No
-					
010	2508406-0000		1	STRUT	
020	2534851-0000		1	BAR	
030	1255117-0000		2	PLAIN BEARING	
040	2503669-0000		1	ECCENTRIC SHAFT	
050	2506340-0000		1	ECCENTRIC SHAFT	
060	1512998-0000		1	FOLDING FLAP CAM	
310	90134-0068		2	CONNECTION	
330	90266-0165	MM	1300	BRASS PIPE	
510	312318-0362		2	SCREW ISO4029 M6X8 A4	
520	312812-0318		2	HEXAGON NUT, NY-LOCK M8 A480	
540	2982739-0000		2	RETAINING RING	
550	321101-0162		4	FLANGE BUSHING, 10X16X8 MM	
560	321101-0203		4	FLANGE BUSHING, 16X22X16 MM	
570	311103-0351		2	PARALLEL PIN ISO 2338 6M6X16 A1	
580	312105-0378		3	SCREW M6S ISO 4014 M6X40 A480	
590	315105-0153		3	WASHER BRB 6,4X12 RFR	
620	90459-1733		1	BELLOW COUPLING, 15X15 MM	

Pos	Part No	UN	Qty	Description	Page No

DESIGN CORRECTION DEVICE RIGHT

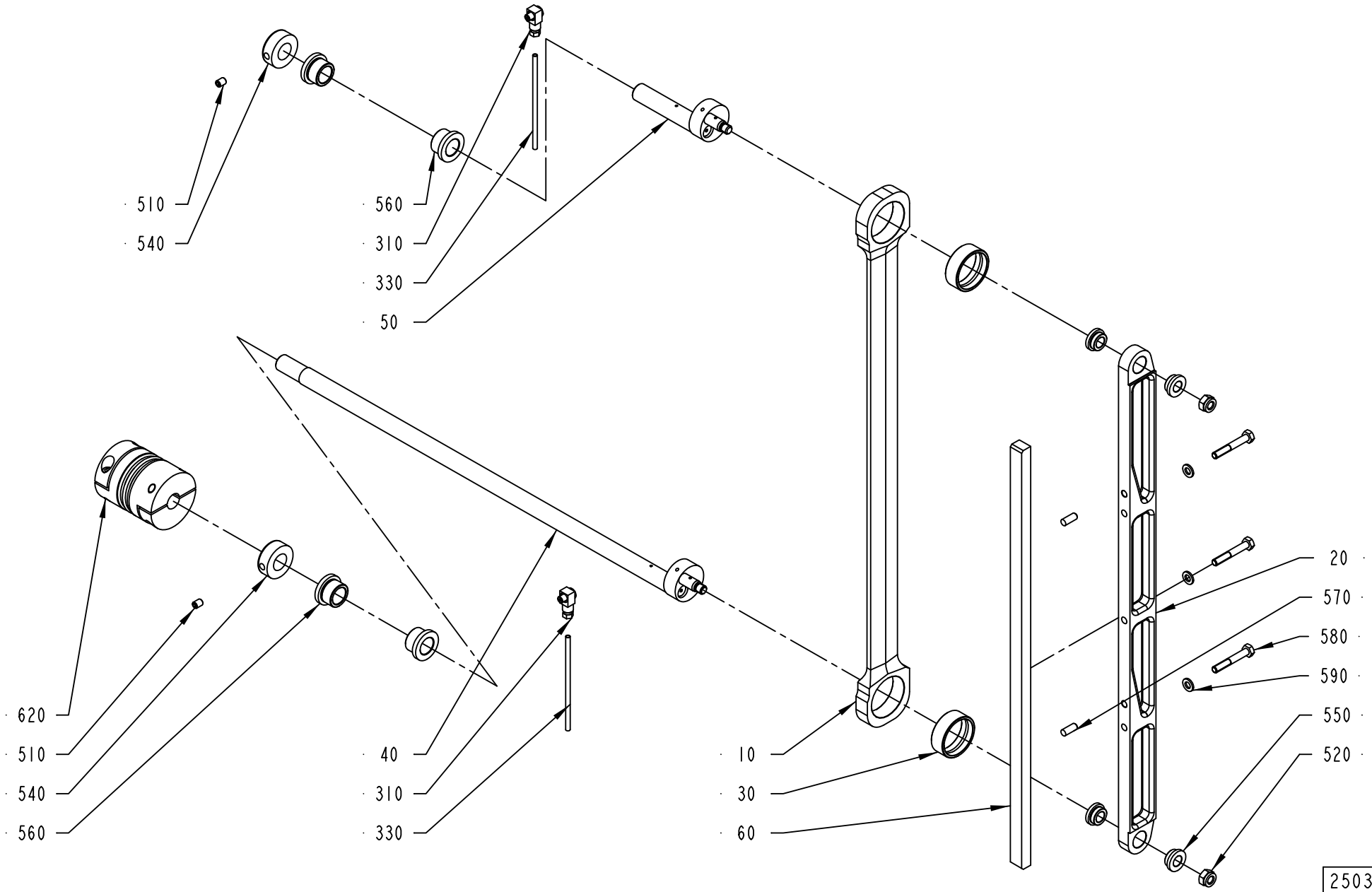

2503666-1
ECM 119396

ECM: 383394 - 20090402
Group number: 2503666-0100
Assembly Drawing: 2503666-1_1_AA

Pos	Part No	UN	Qty	Description	Page No
-					
010	2508406-0000		1	STRUT	
020	2534851-0000		1	BAR	
030	1255117-0000		2	PLAIN BEARING	
040	2503669-0000		1	ECCENTRIC SHAFT	
050	2506340-0000		1	ECCENTRIC SHAFT	
060	1512998-0000		1	FOLDING FLAP CAM	
310	90134-0068		2	CONNECTION	
330	90266-0165	MM	1300	BRASS PIPE	
510	312318-0362		2	SCREW ISO4029 M6X8 A4	
520	312812-0318		2	HEXAGON NUT, NY-LOCK M8 A480	
540	2982739-0000		2	RETAINING RING	
550	321101-0162		4	FLANGE BUSHING, 10X16X8 MM	
560	321101-0203		4	FLANGE BUSHING, 16X22X16 MM	
570	311103-0351		2	PARALLEL PIN ISO 2338 6M6X16 A1	
580	312105-0378		3	SCREW M6S ISO 4014 M6X40 A480	
590	315105-0153		3	WASHER BRB 6,4X12 RFR	
620	90459-1733		1	BELLOW COUPLING, 15X15 MM	

Pos	Part No	UN	Qty	Description	Page No

CABLE CONNECTION

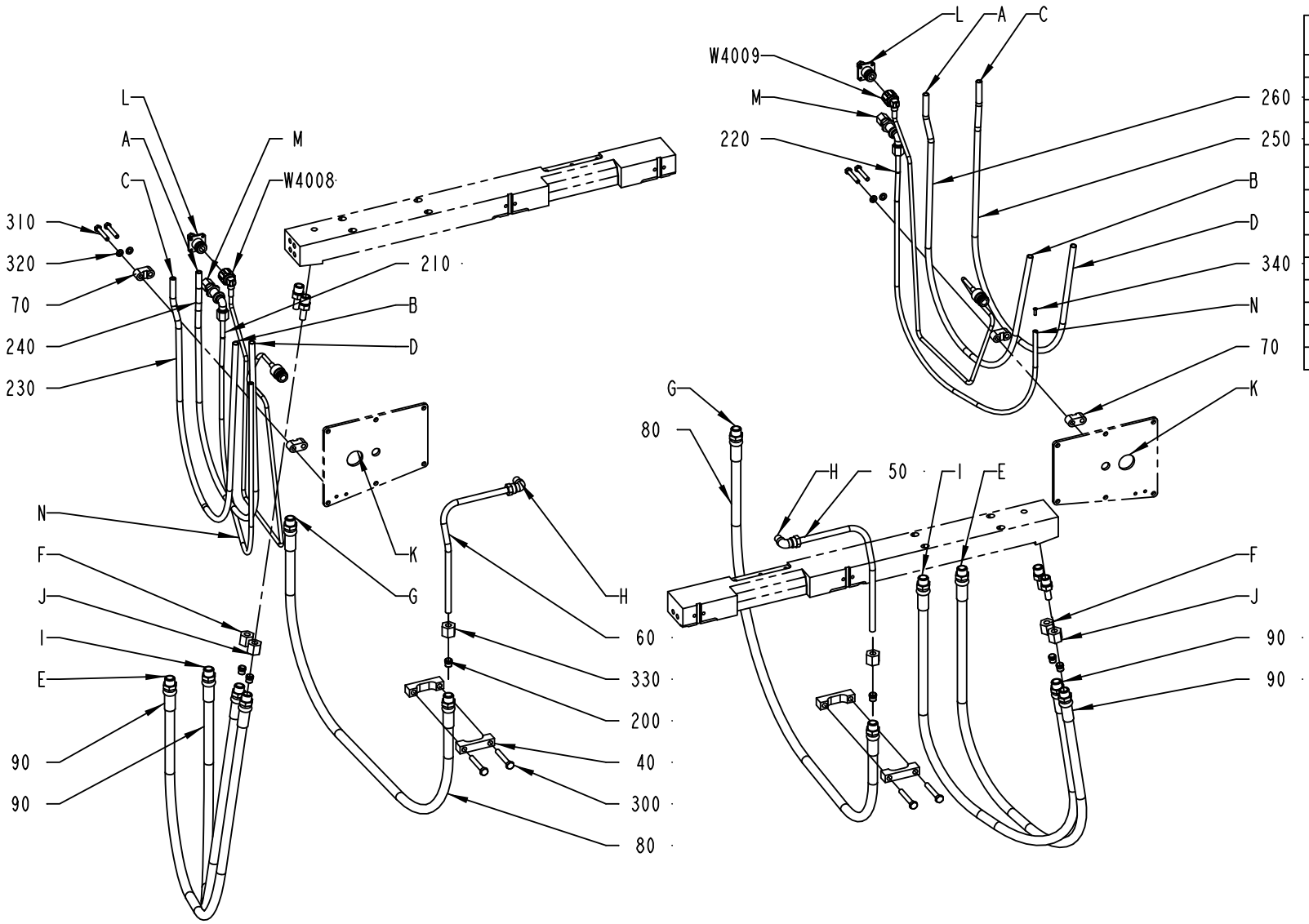

	CONNECTIONS
A	WATER OUT FRAME
B	WATER IN CARRIER
C	WATER IN FRAME
D	WATER OUT CARRIER
E	HYDRAULIC OIL FRAME PRESSURE SIDE
F	HYDRAULIC OIL CARRIER PRESSURE SIDE (CATCH OPEN)
G	HYDRAULIC OIL FRAME CUT SIDE
H	HYDRAULIC OIL CARRIER CUT SIDE
I	HYDRAULIC OIL FRAME PRESSURE SIDE
J	HYDRAULIC OIL CARRIER PRESSURE SIDE (CATCH CLOSE)
K	CONNECTION TRANSFORMER
L	CONNECTION SUPPLY FRAME
M	CENTRAL LUBRIFICATION OUT FRAME
N	CENTRAL LUBRIFICATION IN PRESSURE ARM

2503661-1
ECM 119396

ECM: 345381 - 20080701
Group number: 2503661-0100
Assembly Drawing: 2503661-1_1_AA

Pos	Part No	UN	Qty	Description	Page No
A3/FLEX					
070	464368-0000		4	CRAMP	
090	1517348-0000		4	HOSE	
200	90030-0098		12	ACCESSORIES, FERRULE 8	
230	90166-0123	MM	1440	HOSE	
240	90166-0123	MM	1390	HOSE	
250	90166-0123	MM	1440	HOSE	
260	90166-0123	MM	1390	HOSE	
310	312109-0335		4	SCREW M6S ISO 4017 M5X30 A480	
320	315105-0146		4	WASHER BRB 5,3X10 RFR	
330	342703-0208		12	NUT, PIPES & CONNECTORS,NUT M-8 SS	
W4008	2562736-0001		1	COAXIAL CABLE	
W4009	2562736-0001		1	COAXIAL CABLE	
Common Parts					
040	1129599-0000		4	CRAMP	
050	1038828-0000		1	PIPE	
060	1038829-0000		1	PIPE	
080	2510787-0000		2	HOSE	
210	90166-0108	MM	960	TUBE 6 MM PA TRANSP.	
220	90166-0108	MM	960	TUBE 6 MM PA TRANSP.	
300	312105-0378		4	SCREW M6S ISO 4014 M6X40 A480	
340	90134-0030		4	SLEEVE FOR PLASTIC TUBE	
350	352113-0101		12	CABLE TIE, BLACK 92X2,5 MM	

Pos	Part No	UN	Qty	Description	Page No

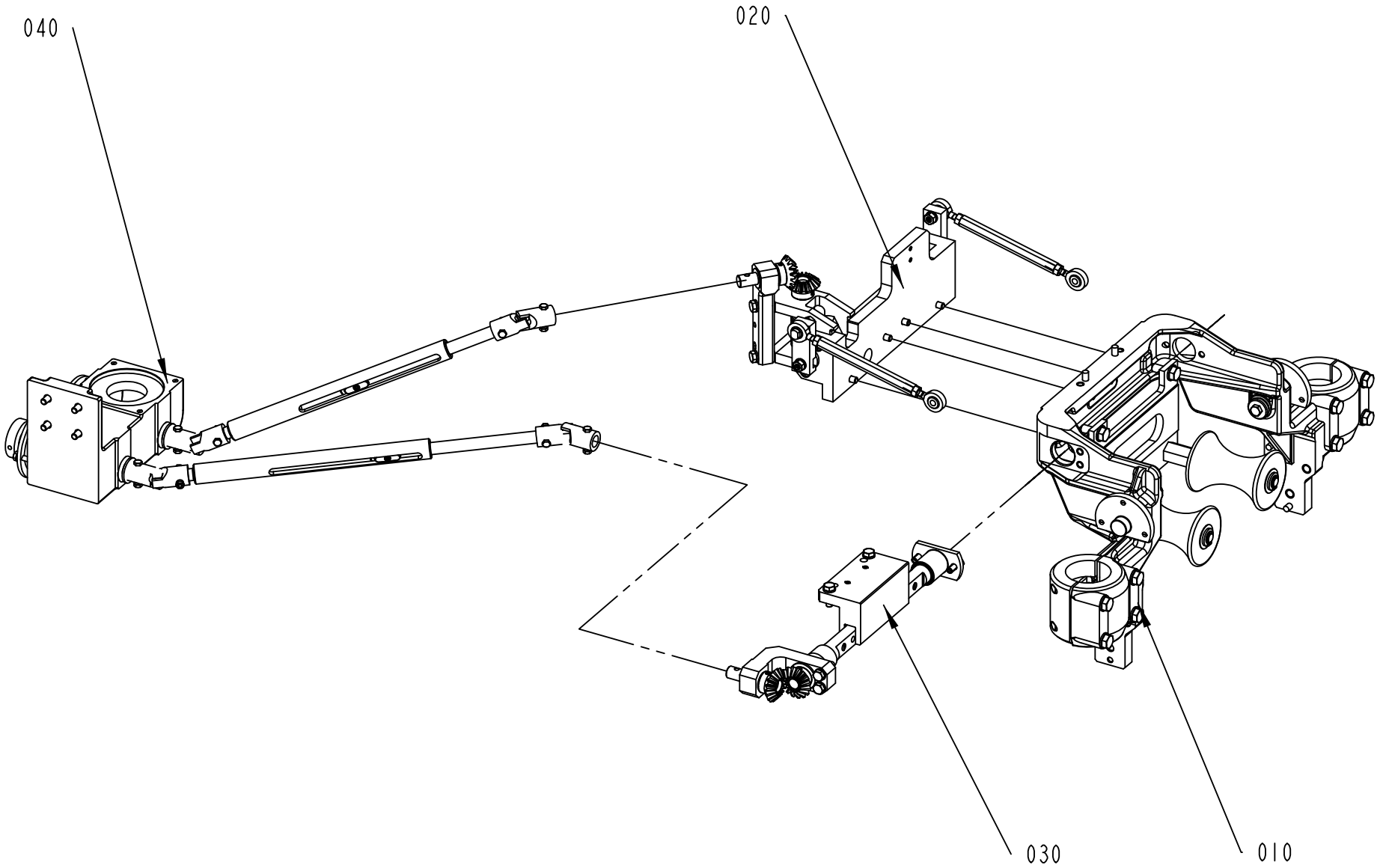

2613646-1
ECM 364260

ECM: 367801 - 20090101
Group number: 2613646-0100
Assembly Drawing: 2613646-1_1_AC

Pos	Part No	UN	Qty	Description	Page No
-					
010	2613644-0100		1	CANTILEVER	**4-303**
020	2986657-0100		1	CONTROL UNIT	**4-305**
030	2986658-0100		1	CENTERING UNIT	**4-307**
040	2985896-0100		1	DRIVE SYSTEM	**4-309**

Pos	Part No	UN	Qty	Description	Page No

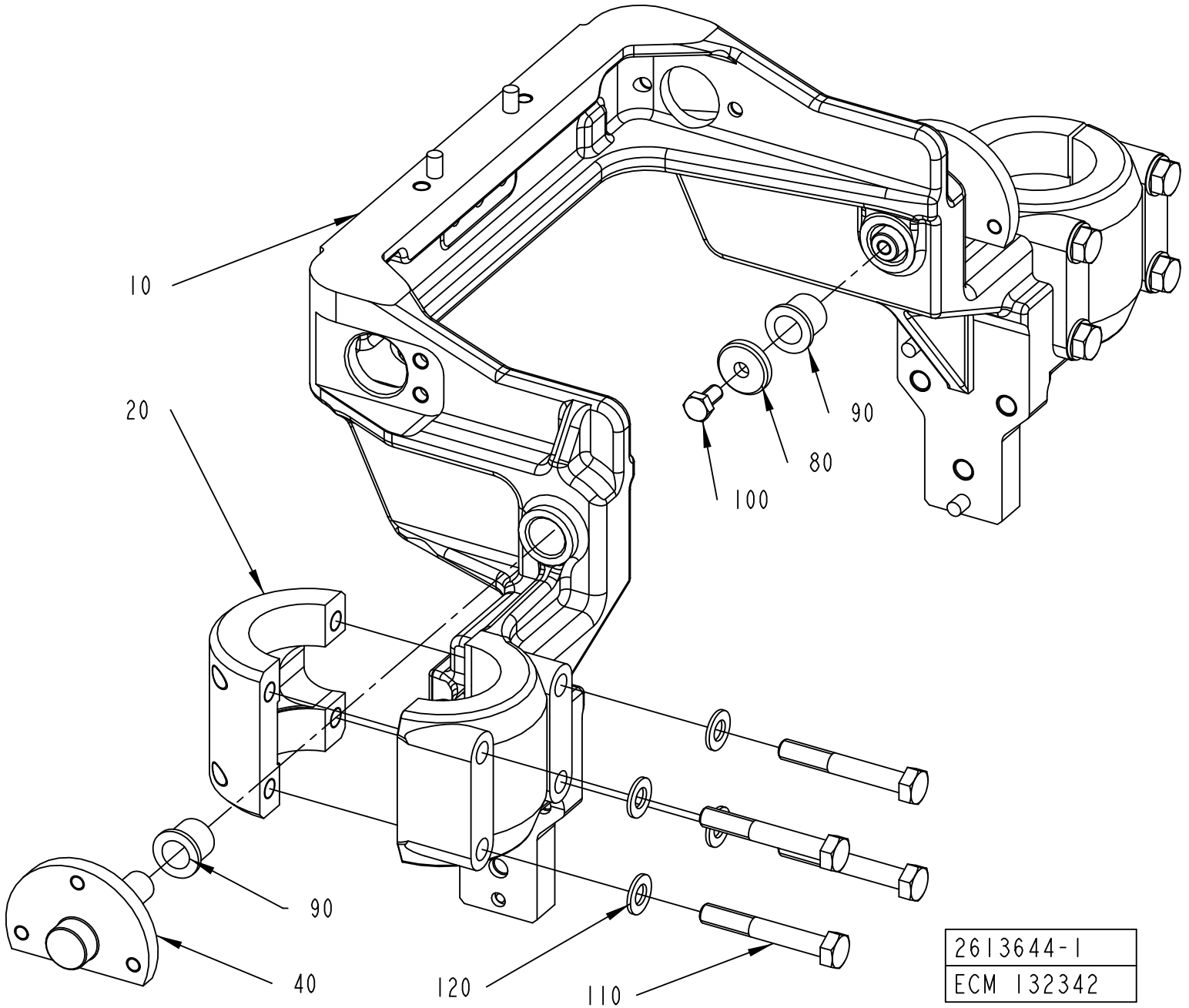
10
20
90
80
100
90
40
120
110
2613644-1
ECM 132342

ECM: 189482 - 20050103
Group number: 2613644-0100
Assembly Drawing: 2613644-1_1_AA

Pos	Part No	UN	Qty	Description	Page No
-					
010	2587464-0000		1	CANTILEVER	
020	2614039-0000		2	CLAMP	
040	2598065-0000		2	SUPPORT	
080	315125-0153		2	WASHER TBRSB 6,4X22X4 A4	
090	90458-1404		4	FLANGE BUSHING, 12X16X16 MM	
100	312105-0366		2	SCREW M6S ISO 4017 M6X12 A480	
110	312105-0462		8	SCREW M6S ISO 4014 M8X55 A480	
120	315105-0165		8	WASHER BRB 8,4X16 RFR	

Pos	Part No	UN	Qty	Description	Page No

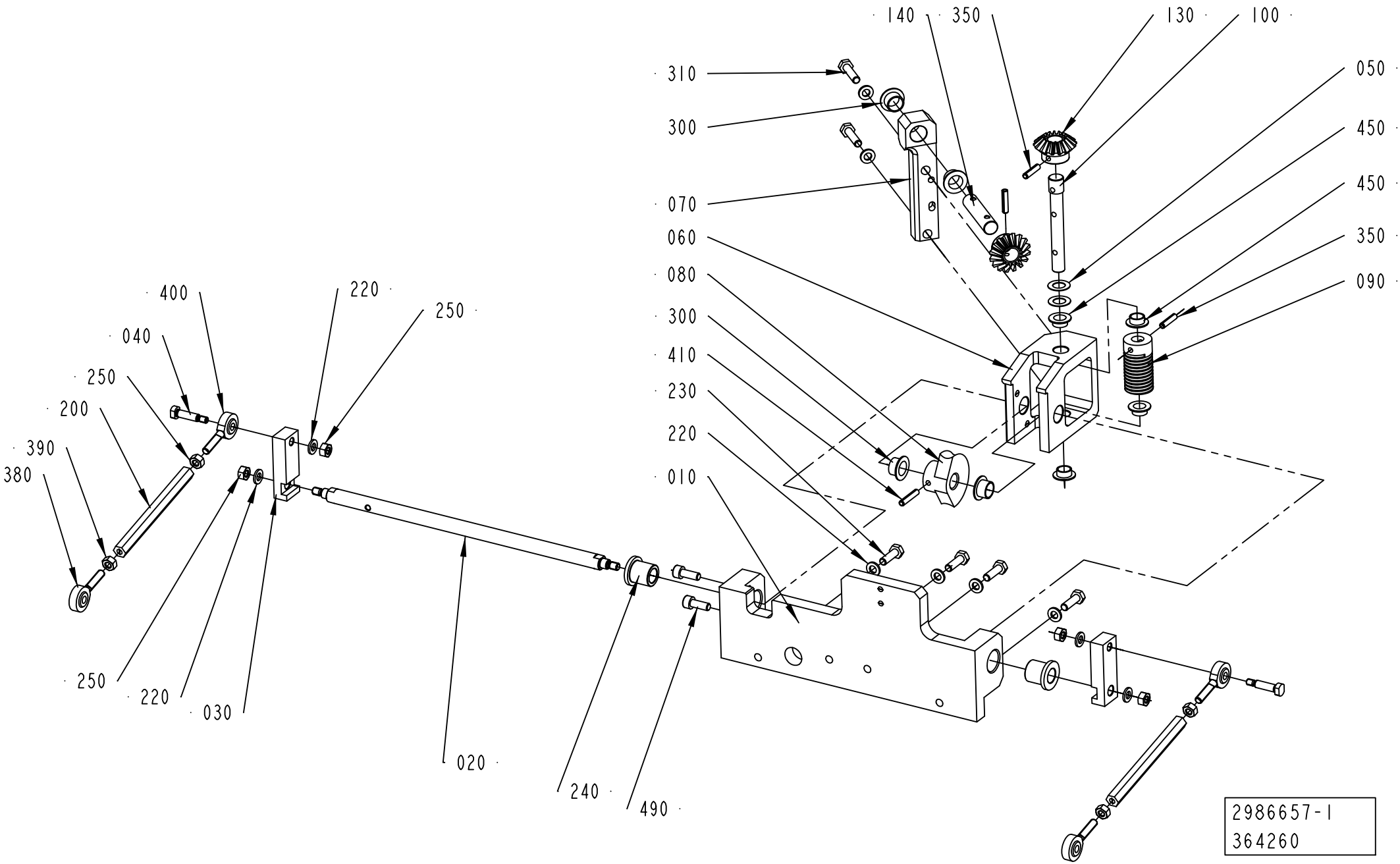
140
350
130
100
310
300
070
060
080
300
410
230
220
010
050
450
450
350
090
400
040
250
200
390
380
250
220
030
220
250
020
240
490
2986657-1
364260

ECM: 367799 - 20090101
Group number: 2986657-0100
Assembly Drawing: 2986657-1_1_AA

Pos	Part No	UN	Qty	Description	Page No
-					
010	2602657-0000		1	LOCK PLATE	
020	2602658-0000		1	SHAFT	
030	2535441-0000		2	LEVER	
040	2535442-0000		2	PIVOT PIN	
050	2691421-0000		2	SHIM	
060	2665720-0000		1	SUPPORT	
070	2665722-0000		1	SUPPORT	
080	2681618-0000		1	WORM WHEEL	
090	2681619-0000		1	WORM GEAR	
100	2665721-0000		1	SHAFT	
130	2681617-0000		2	GEAR WHEEL	
140	2599742-0000		1	SHAFT	
200	2535461-0000		2	CONNECTING ROD	
220	315105-0153		10	WASHER BRB 6,4X12 RFR	
230	312105-0370		4	SCREW M6S ISO 4017 M6X20 A480	
240	321111-0163		2	FLANGE BUSHING, 12X18X20 MM	
250	312605-0316		6	HEXAGON NUT, M6M M6 A280	
300	90240-0261		4	FLANGE BUSHING, 12X14X9 MM	
310	312105-0372		2	SCREW M6S ISO 4017 M6X25 A480	
350	311112-0256		3	SPRING PIN, ISO 8752 4X20-C	
380	90459-4505		2	ROD END, ID=6MM, M6X1 LH	
390	312902-0316		2	NUT HEX. LEFT THREAD, M6 A280	
400	90459-4504		2	ROD END, ID=6MM, M6X1	
410	311112-0258		1	SPRING PIN, ISO 8752 4X24-C	
450	90240-0289		4	FLANGE BUSHING, 10X12X6 MM	
490	312115-0368		2	SCREW ISO4762 M6X16 A4 80	

Pos	Part No	UN	Qty	Description	Page No

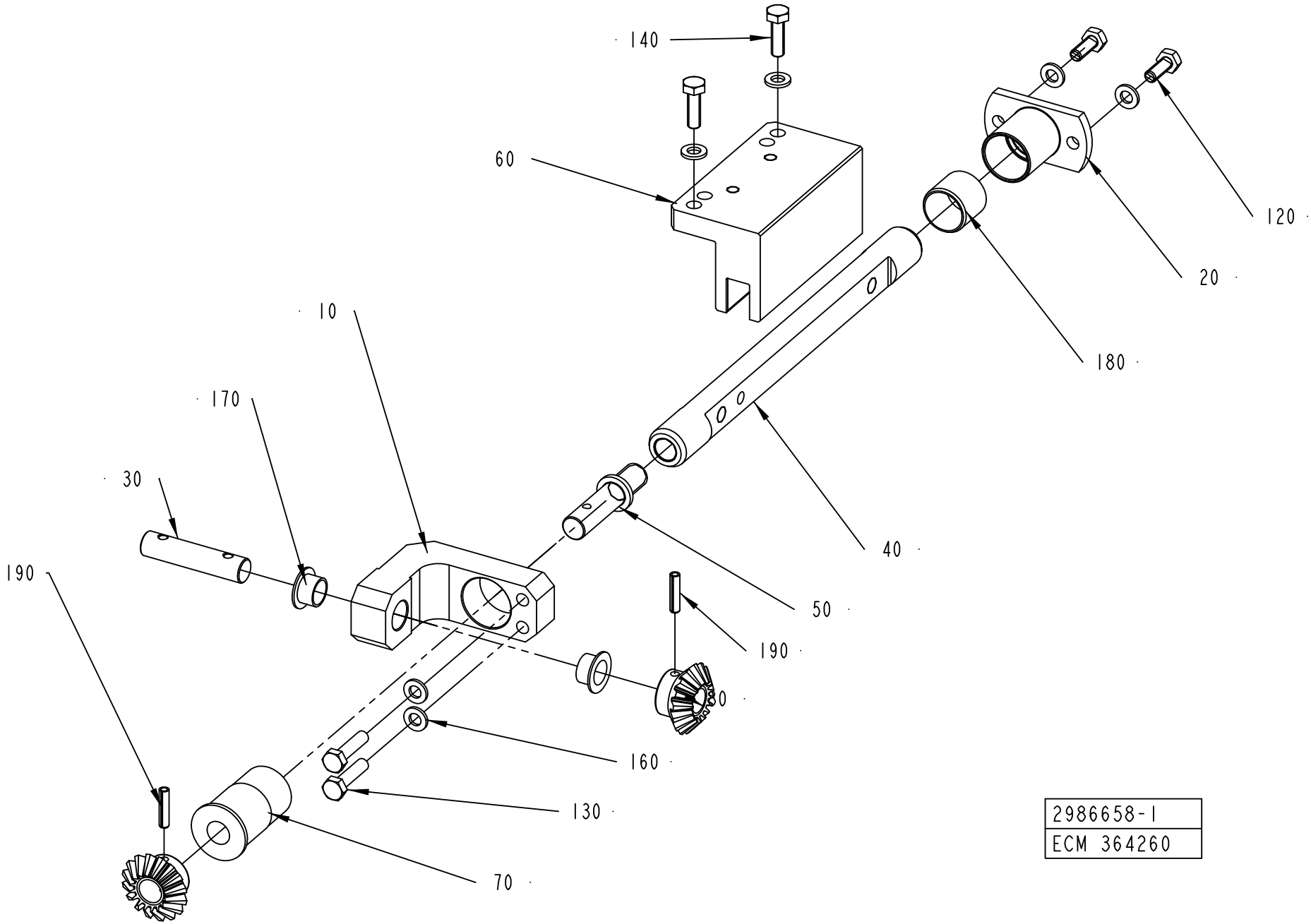
140
60
120
20
180
10
170
30
190
40
50
190
160
130
70
2986658-1
ECM 364260

ECM: 367800 - 20090101
Group number: 2986658-0100
Assembly Drawing: 2986658-1_1_AA

Pos	Part No	UN	Qty	Description	Page No
-					
010	2711289-0000		1	SUPPORT	
020	2599741-0000		1	SUPPORT	
030	2599742-0000		1	SHAFT	
040	2599743-0000		1	SHAFT	
050	2598067-0000		1	SHAFT	
060	2614038-0000		1	SPACER	
070	2623513-0000		1	BUSHING	
080	2681617-0000		2	GEAR WHEEL	
120	312105-0368		2	SCREW M6S ISO 4017 M6X16 A480	
130	312105-0372		2	SCREW M6S ISO 4017 M6X25 A480	
140	312105-0370		2	SCREW M6S ISO 4017 M6X20 A480	
160	315105-0153		6	WASHER BRB 6,4X12 RFR	
170	90240-0261		2	FLANGE BUSHING, 12X14X9 MM	
180	321133-0260		1	BUSHING, 20X23X20 MM	
190	311112-0256		2	SPRING PIN, ISO 8752 4X20-C	

Pos	Part No	UN	Qty	Description	Page No

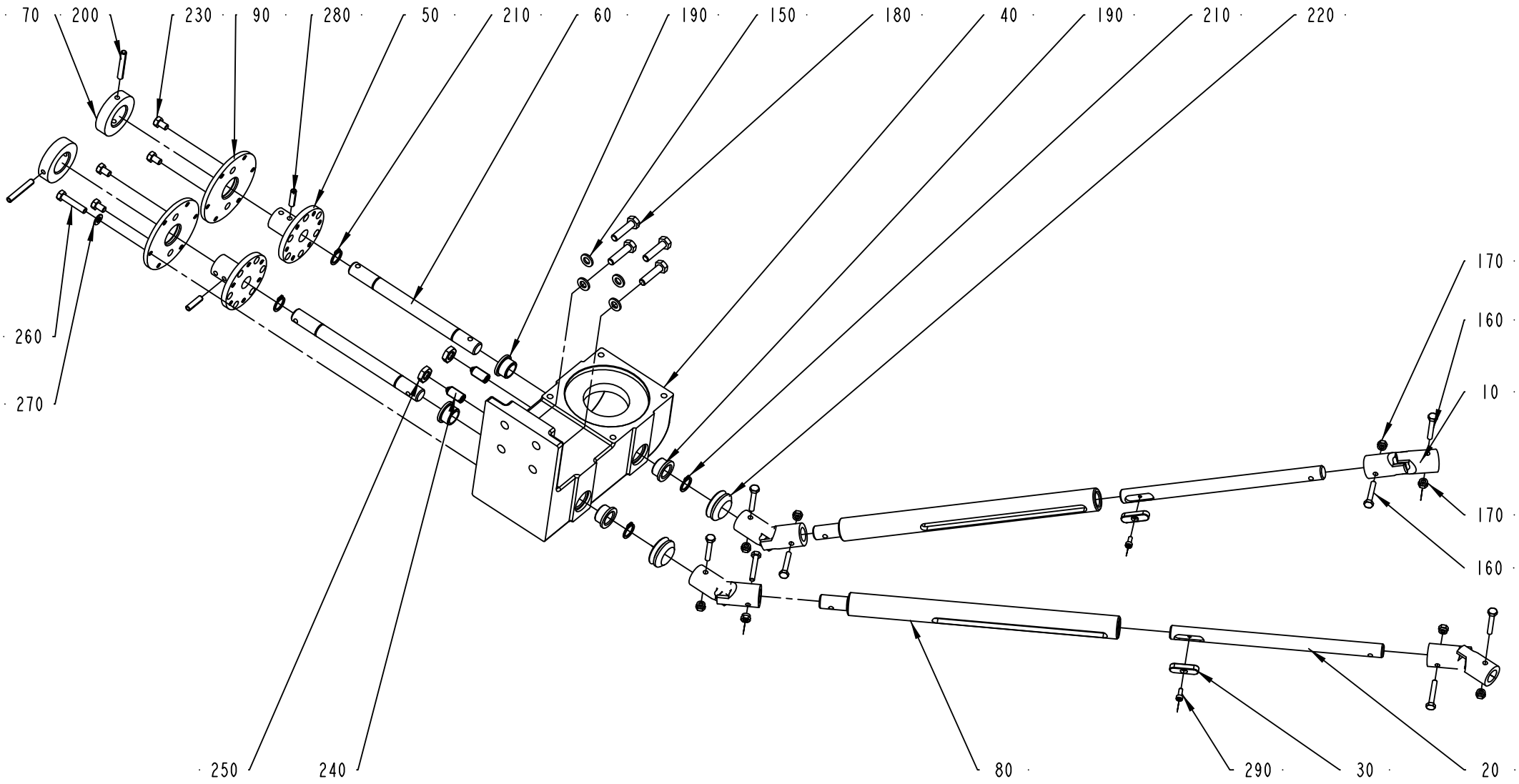

2985896-1
364260

ECM: 367798 - 20090101
Group number: 2985896-0100
Assembly Drawing: 2985896-1_1_AA

Pos	Part No	UN	Qty	Description	Page No
-					
010	2535455-0000		4	LINK	
020	2602652-0000		2	SHAFT	
030	2535457-0000		2	WOODRUFF KEY	
040	2598502-0000		1	SUPPORT	
050	2618333-0000		2	PLATE	
060	2618332-0000		2	SHAFT	
070	2618330-0000		2	HANDLE	
080	2535458-0000		2	SHAFT	
090	2618329-0000		2	PLATE	
150	315105-0153		4	WASHER BRB 6,4X12 RFR	
160	312105-0297		8	SCREW M6S ISO 4017 M4X25 A470	
170	312812-0312		8	HEXAGON NUT, NY-LOCK M4 A480	
180	312105-0372		4	SCREW M6S ISO 4017 M6X25 A480	
190	90240-0165		4	FLANGE BUSHING, 12X16X10 MM	
200	311112-0262		2	SPRING PIN, ISO 8752 4X32-C	
210	315751-0109		4	RETAINING RING FOR SHAFT DIN 471 12 SS	
220	315220-0143		2	V-RINGS 18X26X10,5 MM V-20S	
230	312105-0323		4	SCREW M6S ISO 4017 M5X8 A480	
240	90287-0112		2	SCREW SPRINGLOAD. SLOTTED HEAD M8X16	
250	312625-0318		2	HEXAGON THIN NUT, EN 24035 ML6M M8 A4	
260	312105-0333		1	SCREW M6S ISO 4017 M5X25 A480	
270	315105-0146		1	WASHER BRB 5,3X10 RFR	
280	311112-0255		2	SPRING PIN, ISO 8752 4X18-C	
290	312115-0222		2	SCREW ISO4762 M3X8 A4 80	

Pos	Part No	UN	Qty	Description	Page No

Tetra Pak

SPC
Spare Parts Catalogue

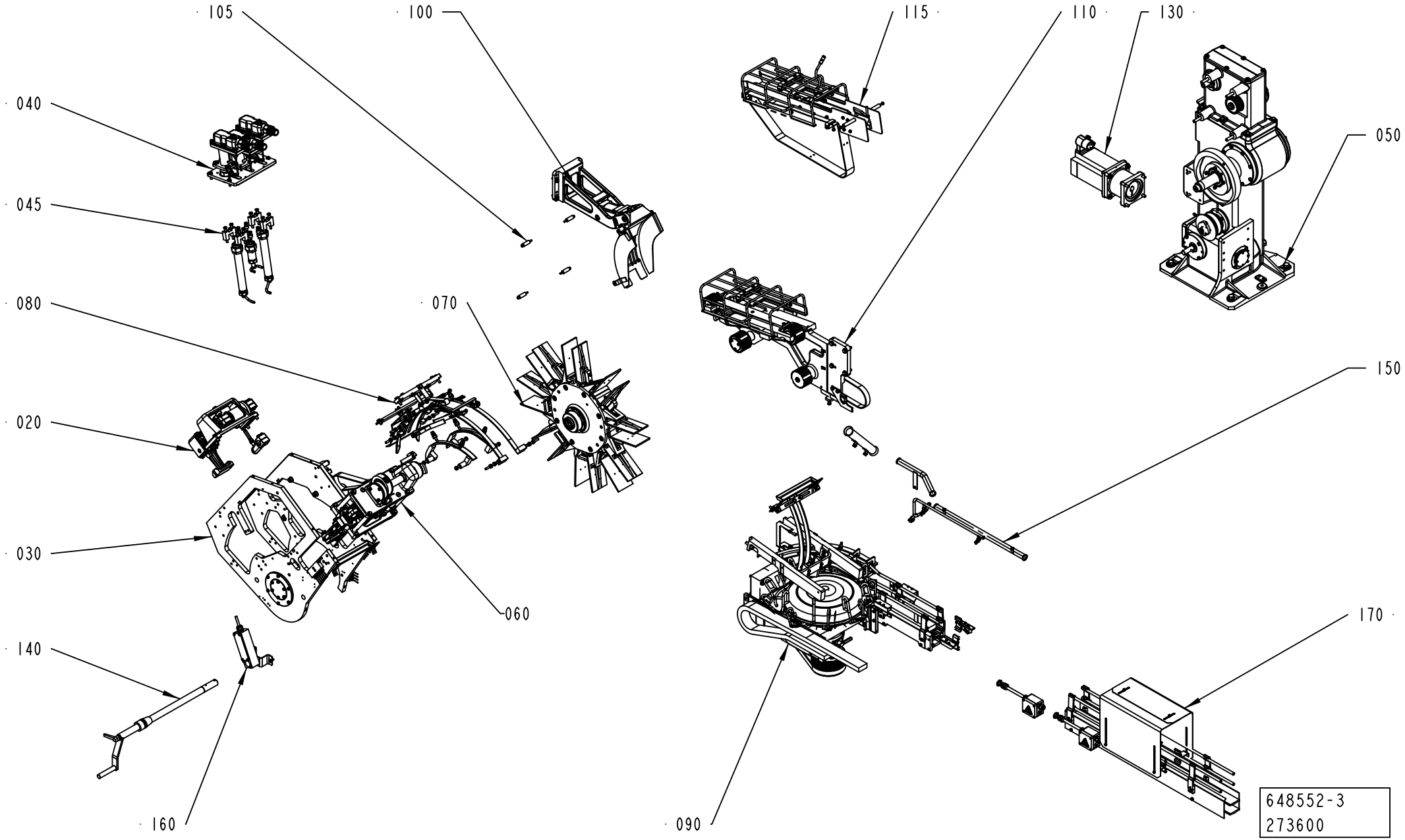
105
100
115
110
130
040
050
045
080
070
150
020
030
060
140
170
160
090
648552-3
273600

ECM: 355078 - 20081001
Group number: 648552-0150
Assembly Drawing: 648552-3_1_AA

Pos	Part No	UN	Qty	Description	Page No
A3/FLEX NOQC					
020	1144329-0300		1	PULL-DOWN DEVICE	**5-5, 5-7, 5-9, 5-11**
070	1361918-0300		1	WHEEL	**5-29, 5-31**
080	1285012-0300		1	FOLDING PART	**5-33**
105	1361922-0200		1	DROP CHUTE VARIANT	**5-65**
115	1361923-0200		1	INFEED CONVEYOR VARIANT	**5-67, 5-69, 5-71, 5-73, 5-75**
A3/FLEX QC					
020	1144329-0300		1	PULL-DOWN DEVICE	**5-5, 5-7, 5-9, 5-11**
070	2523811-0100		1	WHEEL	**5-77, 5-79, 5-81**
080	2543480-0100		1	FOLDING PART	**5-93**
105	2537128-0100		1	DROP CHUTE VARIANT	**5-137, 5-139, 5-141, 5-143**
115	2522129-0100		1	INFEED CONVEYOR VARIANT	**5-145, 5-147, 5-149, 5-151**
Common Parts					
030	1144324-0300		1	FRAMEWORK	**5-169, 5-171**
040	2524509-0100		1	FLAP HEATER BODY	**5-173, 5-175, 5-177**
045	1487158-0300		1	FLAP HEATER VARIANT	**5-199, 5-201, 5-203, 5-205, 5-207, 5-209**
050	2594054-0100		1	INDEXING UNIT	**5-211**
060	1144331-0300		1	PRESSURE DEVICE	**5-231, 5-233, 5-235, 5-237, 5-239, 5-241**
090	1285260-0500		1	OUT FEED	**5-247, 5-249, 5-251**
100	2541714-0100		1	DROP CHUTE CRADLE	**5-301, 5-303**
110	1517298-0250		1	INFEED CONVEYOR	**5-305**
130	2522128-0150		1	MOTOR UNIT	**5-319**
140	1260883-0200		1	CRANK	**5-321**
150	2531274-0100		1	ELECTRICAL CONNECTION	**5-323, 5-325**
160	1279677-0100		1	CRANK GUARD	**5-327**
170	2579995-0100		1	LAST POINT DE	**5-329, 6-79**

Pos	Part No	UN	Qty	Description	Page No

PULL-DOWN DEVICE

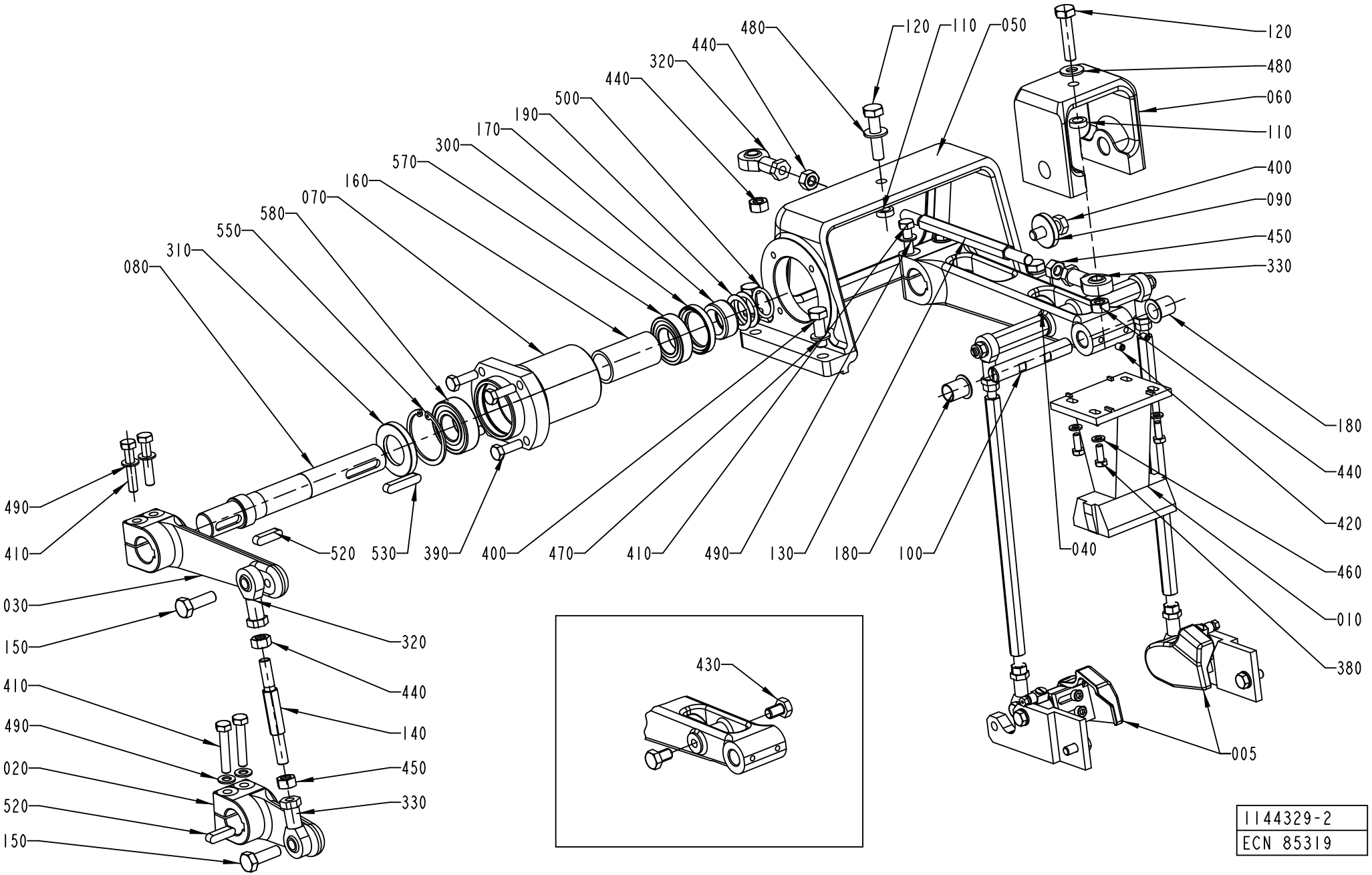

ECM: 368991 - 20090101
Group number: 1144329-0300
Assembly Drawing: 1144329-2_1_AB

This list covers pages from 5-4 to 5-11

Pos	Part No	UN	Qty	Description	Page No
TPA 0250SQ NOQC (See drawing on page: 5-4)					
005	1348056-0300		1	FOLDING PART	**5-13, 5-15**
010	1549846-0000		1	BLOCK	
TPA 0330SQ (See drawing on page: 5-4)					
005	1348056-0300		1	FOLDING PART	**5-13, 5-15**
010	1532266-0000		1	BLOCK	
TPA 0500SQ (See drawing on page: 5-6)					
005	1348056-0300		1	FOLDING PART	**5-13, 5-15**
010	2610779-0000		1	BLOCK	
200	2598706-0000		2	BAR	
590	312125-0230		4	SCREW ISO 1207 M3X20 A4	
600	315105-0124		4	WASHER BRB 3,2X6 RFR	
TPA 1000SQ NOQC (See drawing on page: 5-4)					
005	1348056-0300		1	FOLDING PART	**5-13, 5-15**
010	1519341-0000		1	BLOCK	
TPA 1000SQ QC, TPA 0750SQ QC (See drawing on page: 5-8)					
005	2588130-0100		1	FOLDING FIN DEVICE	**5-17, 5-19**
010	2647110-0000		1	BLOCK	
610	342748-0102		1	T-CONNECTION 6MM	
620	350002-0006		2	PUSH-IN L-FITTING QSL-F-G1/8-6	
630	315400-0001	MM	1500	TUBE PUN-H-6X1-BL	
TBA 0200B NOQC, TBA 0330S NOQC, TBA 0250B NOQC (See drawing on page: 5-4)					
010	1350808-0000		1	BLOCK	
430	312105-0489		2	SCREW M6S ISO 4017 M10X16 A480	
TBA 0200B QC, TBA 0330S QC, TBA 0250B QC (See drawing on page: 5-4)					
010	2591790-0000		1	BLOCK	
430	312105-0489		2	SCREW M6S ISO 4017 M10X16 A480	
TBA 0200M, TBA 0250S (See drawing on page: 5-4)					
010	2522199-0000		1	BLOCK	
430	312105-0489		2	SCREW M6S ISO 4017 M10X16 A480	
TBA 0200S (See drawing on page: 5-4)					
010	1260887-0000		1	BLOCK	
430	312105-0489		2	SCREW M6S ISO 4017 M10X16 A480	
TBA 0200SQ, TBA 0250SQ (See drawing on page: 5-8)					
005	2588130-0100		1	FOLDING FIN DEVICE	**5-17, 5-19**
010	2668239-0000		1	BLOCK	
TBA 0500B, TBA 1000B NOMOLDEDCAP (See drawing on page: 5-4)					
010	1260700-0000		1	BLOCK	
430	312105-0489		2	SCREW M6S ISO 4017 M10X16 A480	
TBA 0500S (See drawing on page: 5-4)					
010	1499139-0000		1	BLOCK	
430	312105-0489		2	SCREW M6S ISO 4017 M10X16 A480	
TBA 0500SQ QC, TBA 1000SQ QC (See drawing on pages: 5-6, 5-10)					
005	2588130-0100		1	FOLDING FIN DEVICE	**5-17, 5-19**
010	2769843-0000		1	BLOCK	
200	1558020-0000		2	ROD	
210	2769844-0000		4	GRUB SCREW	
590	312125-0234		4	SCREW ISO 1207 M3X30 A4	
600	315105-0124		4	WASHER BRB 3,2X6 RFR	
620	350002-0002		1	PUSH-IN L-FITTING QSL-F-M5-6	
630	315400-0001	MM	1500	TUBE PUN-H-6X1-BL	
TBA 1000B STDA7 (See drawing on page: 5-4)					
005	1348056-0300		1	FOLDING PART	**5-13, 5-15**
010	1260700-0000		1	BLOCK	
TBA 1000S NOMOLDEDCAP (See drawing on page: 5-4)					
010	1144933-0000		1	BLOCK	
430	312105-0489		2	SCREW M6S ISO 4017 M10X16 A480	
TBA 1000S STDA7, TBA 1000S LIGHTCAP (See drawing on page: 5-6)					
005	1348056-0300		1	FOLDING PART	**5-13, 5-15**
010	1144933-0000		1	BLOCK	
TBA 1000SQ					
005	1348056-0300		1	FOLDING PART	**5-13, 5-15**
010	1558008-0000		1	BLOCK	
200	1558020-0000		2	ROD	
590	312125-0234		4	SCREW ISO 1207 M3X30 A4	
600	315105-0124		4	WASHER BRB 3,2X6 RFR	
TBA 1500S (See drawing on page: 5-4)					
010	1317789-0000		1	BLOCK	
430	312105-0489		2	SCREW M6S ISO 4017 M10X16 A480	
TBA 1890S QC, TBA 2000S QC, TBA 1400B (See drawing on page: 5-6)					
010	2616229-0000		1	BLOCK	
430	312105-0489		2	SCREW M6S ISO 4017 M10X16 A480	
590	312125-0234		4	SCREW ISO 1207 M3X30 A4	
600	315105-0124		4	WASHER BRB 3,2X6 RFR	
TPA 0200SQ QC, TPA 0250SQ QC (See drawing on page: 5-8)					
005	2588130-0100		1	FOLDING FIN DEVICE	**5-17, 5-19**
010	2674253-0000		1	BLOCK	
620	312318-0362		2	SCREW ISO4029 M6X8 A4	
Common Parts					
020	1144472-0000		1	LEVER	
030	1144473-0000		1	LEVER	
040	1499635-0000		1	LEVER	
050	1144475-0000		1	BRACKET	
060	1144476-0000		1	BRACKET	

Machine Type | Group Description | Used-In | Group Number | Page No

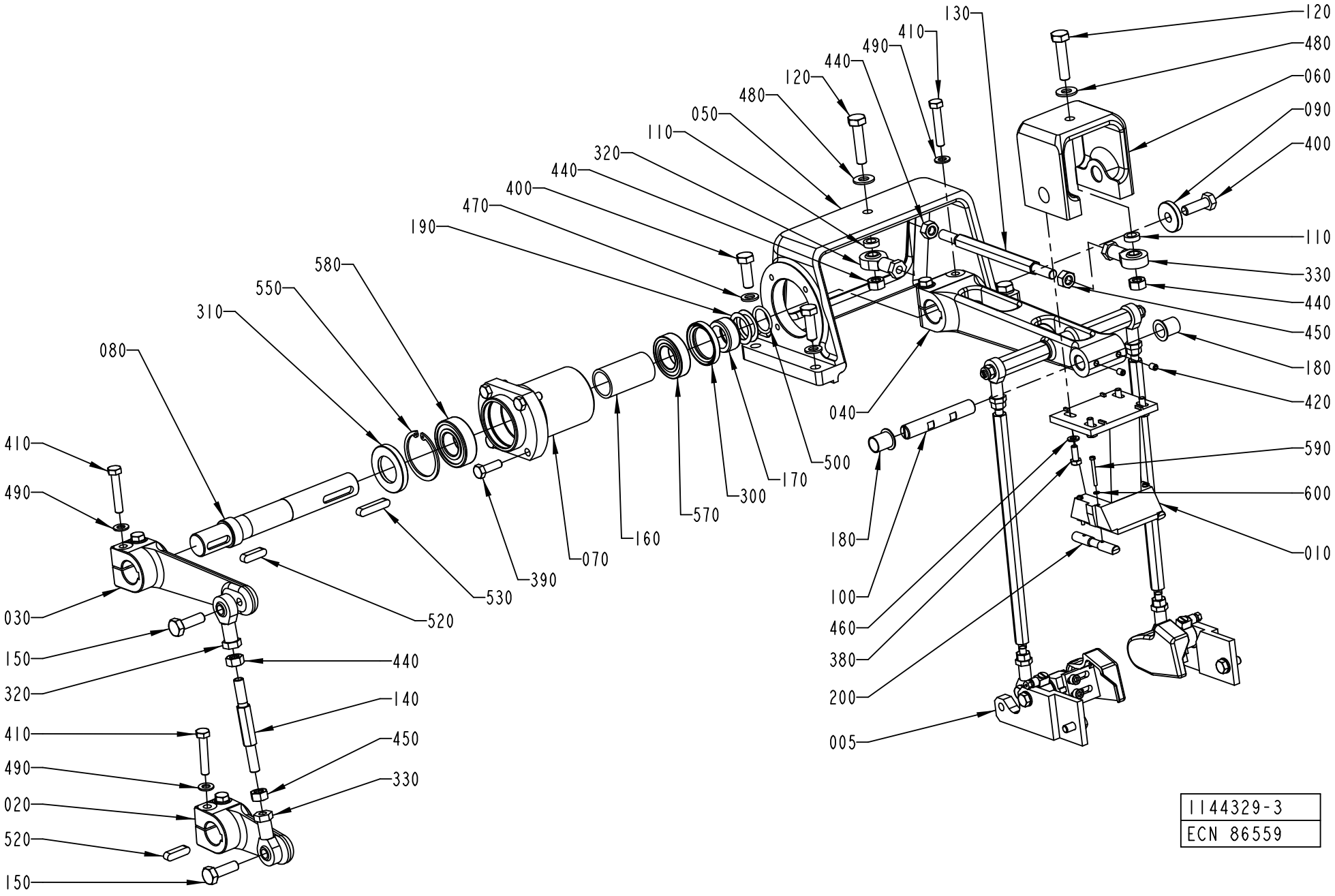
130
120
480
060
090
400
410
490
440
120
480
050
110
320
440
400
470
190
580
550
310
080
410
490
030
150
320
410
490
020
520
150
440
140
450
330
520
530
390
070
160
570
300
170
500
040
180
100
460
380
200
005
110
330
440
450
180
420
590
600
010
1144329-3
ECN 86559

Pos	Part No	UN	Qty	Description	Page No
Common Parts (Cont'd)					
070	1144566-0000		1	FLANGE	
080	1144678-0000		1	SHAFT	
090	1144681-0000		1	WASHER	
100	1144683-0000		1	AXLE PIN	
110	1144684-0000		2	SPACER	
120	1144685-0000		2	SCREW	
130	1144686-0000		1	TIE ROD	
140	1144687-0000		1	TIE ROD	
150	1144688-0000		2	SCREW	
160	1260824-0000		1	SPACER RING	
170	1334328-0000		1	SPACER	
180	1260944-0000		2	BUSHING	
190	1334018-0000		4	SHIM	
300	90091-0297		1	RADIAL SEAL 35X47X7 MM DUST LIP	
310	90091-0299		1	RADIAL SEAL 30X52X7 MM DUST LIP	
320	90115-0181		2	ROD END, ID=10 MM M10X1,5	
330	90115-0182		2	ROD END, ID=10 MM M10X1,5LH	
380	312105-0368		4	SCREW M6S ISO 4017 M6X16 A480	
390	312105-0455		4	SCREW M6S ISO 4017 M8X30 A480	
400	312105-0495		5	SCREW M6S ISO 4017 M10X30 A480	
410	312109-0460		6	SCREW M6S ISO 4017 M8X45 A480	
420	312318-0362		2	SCREW ISO4029 M6X8 A4	
440	312605-0320		4	HEXAGON NUT, M6M M10 A280	
450	312902-0320		2	NUT HEX. LEFT THREAD, M10 A280	
460	315105-0153		4	WASHER BRB 6,4X12 RFR	
470	315105-0173		4	WASHER BRB 10,5X22 RFR	
480	315105-0173		2	WASHER BRB 10,5X22 RFR	
490	315105-0165		10	WASHER BRB 8,4X16 RFR	
500	315202-0217		1	O-RING 24,2X3 MM	
520	315705-0267		1	PARALLEL KEY W. ROUND ENDS 8X7X30 MM	
530	315705-0270		1	PARALLEL KEY W. ROUND ENDS 8X7X40 MM	
550	315753-0132		1	RETAINING RING FOR BORE DIN 472 52 A2	
570	321308-0205		1	BALL BEARING, 25X47X12MM	
580	321313-0105		1	BALL BEARING, 25X52X15MM	

Pos	Part No	UN	Qty	Description	Page No

PULL-DOWN DEVICE

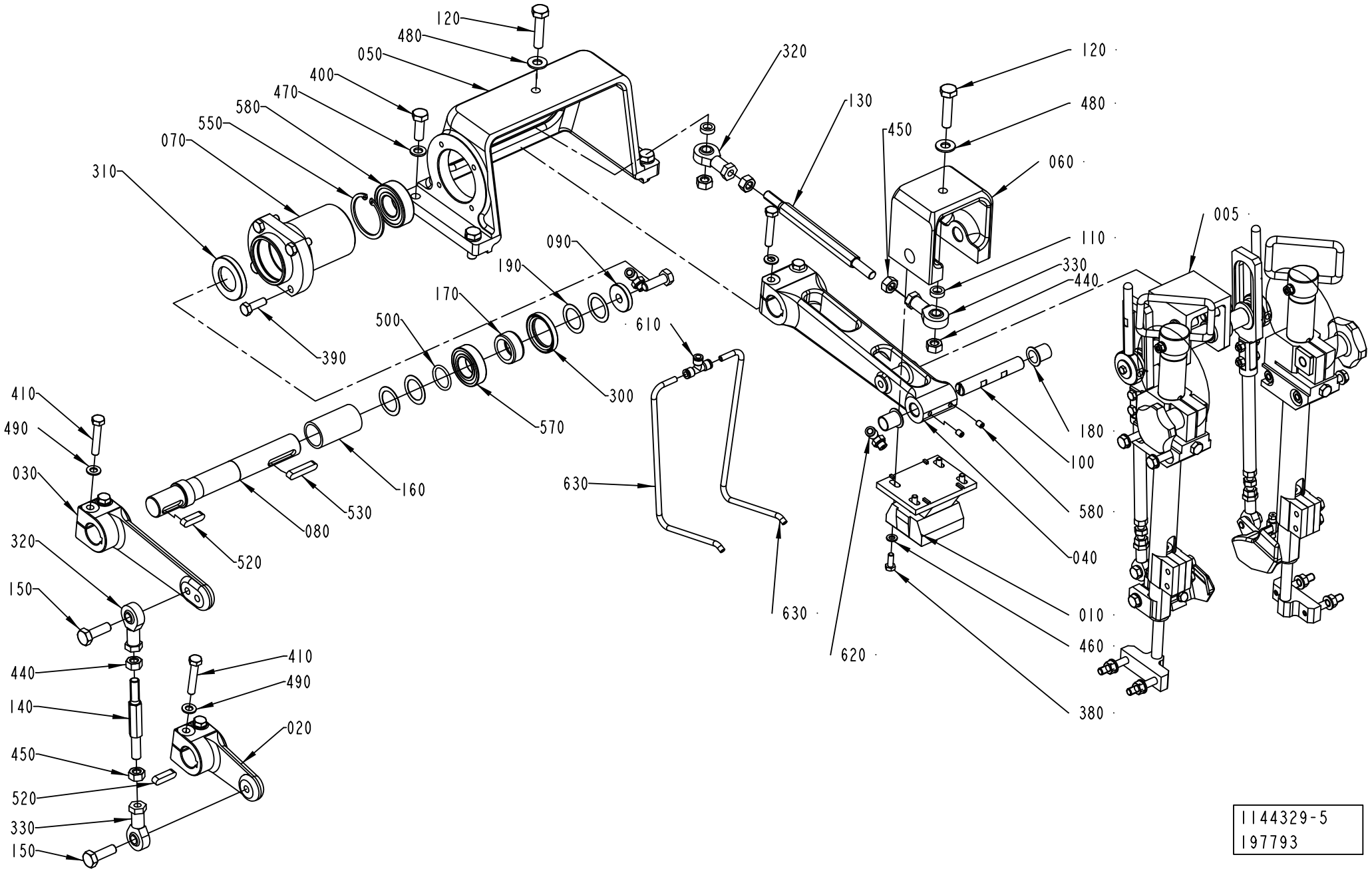

ECM: 368991 - 20090101
Group number: 1144329-0300
Assembly Drawing: 1144329-5_1_AA

This list covers pages from 5-4 to 5-11

Pos	Part No	UN	Qty	Description	Page No
SEE PREVIOUS LISTS PAGES: 5-5, 5-7.					

Pos	Part No	UN	Qty	Description	Page No

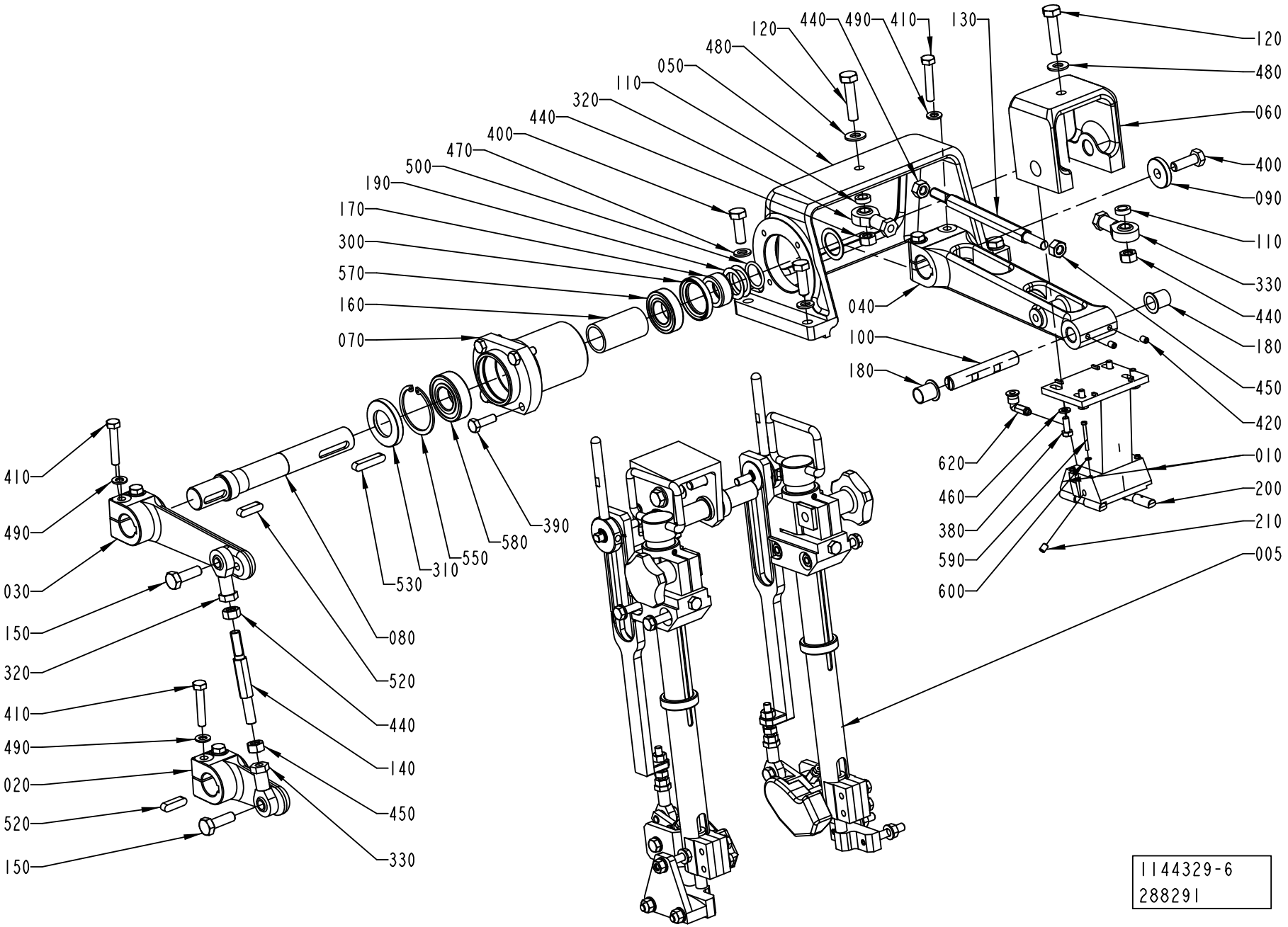
120
440
490
410
130
480
050
110
320
440
400
470
500
190
170
300
570
160
070
410
490
030
150
320
410
490
020
520
150
080
520
440
140
450
330
530
310
550
580
390
120
480
060
400
090
110
330
440
180
450
420
040
100
180
620
460
380
590
600
010
200
210
005
1144329-6
288291

ECM: 368991 - 20090101
Group number: 1144329-0300
Assembly Drawing: 1144329-6_1_AA

This list covers pages from 5-4 to 5-11

Pos	Part No	UN	Qty	Description	Page No
SEE PREVIOUS LISTS PAGES: 5-5, 5-7.					

Pos	Part No	UN	Qty	Description	Page No

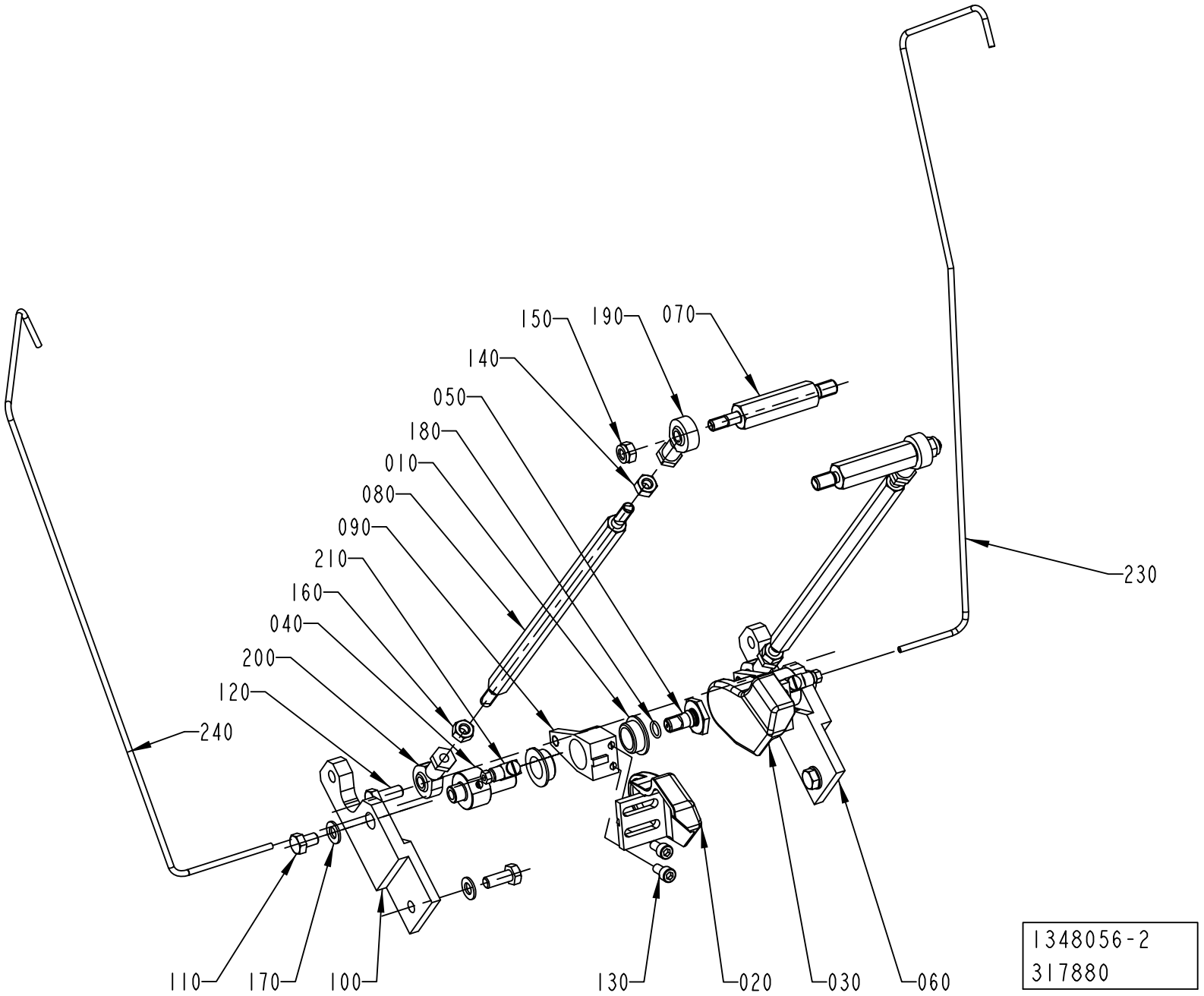
150
190
070
140
050
180
010
080
090
210
160
040
200
120
240
230
110
170
100
130
020
030
060
1348056-2
317880

ECM: 400954 - 20090612
Group number: 1348056-0300
Assembly Drawing: 1348056-2_1_AB

This list covers pages from 5-12 to 5-15

Pos	Part No	UN	Qty	Description	Page No
TBA 1000B STDA7 (See drawing on page: 5-12)					
020	1487922-0000		1	FOLDING DEVICE	
030	1487923-0000		1	FOLDING DEVICE	
060	1347600-0000		1	SUPPORT	
070	1499765-0000		2	AXLE LINK	
080	2609368-0000		2	TIE ROD	
090	1350440-0000		2	LEVER	
100	1350441-0000		1	SUPPORT	
TBA 1000SQ, TBA 1000S STDA7, TBA 1000S LIGHTCAP (See drawing on page: 5-12)					
020	1487922-0000		1	FOLDING DEVICE	
030	1487923-0000		1	FOLDING DEVICE	
060	1347600-0000		1	SUPPORT	
070	1499765-0000		2	AXLE LINK	
080	1499103-0000		2	TIE ROD	
090	1350440-0000		2	LEVER	
100	1350441-0000		1	SUPPORT	
TPA 0250SQ (See drawing on page: 5-12)					
020	1296180-0000		1	FOLDING DEVICE	
030	1296181-0000		1	FOLDING DEVICE	
060	1532270-0000		1	SUPPORT	
070	1532268-0000		2	AXLE LINK	
080	1532269-0000		2	TIE ROD	
090	1350440-0000		2	LEVER	
100	1532267-0000		1	SUPPORT	
TPA 0330SQ (See drawing on page: 5-12)					
020	1296180-0000		1	FOLDING DEVICE	
030	1296181-0000		1	FOLDING DEVICE	
060	1532270-0000		1	SUPPORT	
070	1532268-0000		2	AXLE LINK	
080	1532269-0000		2	TIE ROD	
090	1350440-0000		2	LEVER	
100	1532267-0000		1	SUPPORT	
TPA 0500SQ SMILE (See drawing on page: 5-14)					
020	2606277-0000		1	FOLDING DEVICE	
030	2606278-0000		1	FOLDING DEVICE	
060	2529673-0000		1	SUPPORT	
070	1532268-0000		2	AXLE LINK	
080	2527531-0000		2	TIE ROD	
090	2529676-0000		1	LEVER	
100	2529674-0000		1	SUPPORT	
220	2529675-0000		1	LEVER	
TPA 1000SQ SMILE (See drawing on page: 5-14)					
020	2529671-0000		1	FOLDING DEVICE	
030	2529672-0000		1	FOLDING DEVICE	
060	2553344-0000		1	SUPPORT	
070	2553346-0000		2	AXLE LINK	
080	2553345-0000		2	TIE ROD	
090	2529676-0000		1	LEVER	
100	2553343-0000		1	SUPPORT	
220	2529675-0000		1	LEVER	
Common Parts					
010	1282708-0000		4	BUSHING	
040	1347495-0000		2	AXLE PIN	
050	1347496-0000		2	SCREW	
110	312105-0447		2	SCREW M6S ISO 4017 M8X12 A480	
120	312105-0451		4	SCREW M6S ISO 4017 M8X20 A480	
130	312115-0366		4	SCREW ISO4762 M6X12 A4 80	
140	312605-0318		2	HEXAGON NUT, M6M M8 A280	
150	312812-0318		2	HEXAGON NUT, NY-LOCK M8 A480	
160	312902-0318		2	NUT HEX. LEFT THREAD, M8 A280	
170	315105-0165		4	WASHER BRB 8,4X16 RFR	
180	315202-0107		2	O-RING 9,1X1,6 MM	
190	90115-0139		2	ROD END, ID=8 MM, M8X1,25	
200	90115-0180		2	ROD END, ID=8 MM, M8X1,25 LH	
210	90134-0068		2	CONNECTION	
230	2868548-0000		1	PIPE	
240	2868547-0000		1	PIPE	

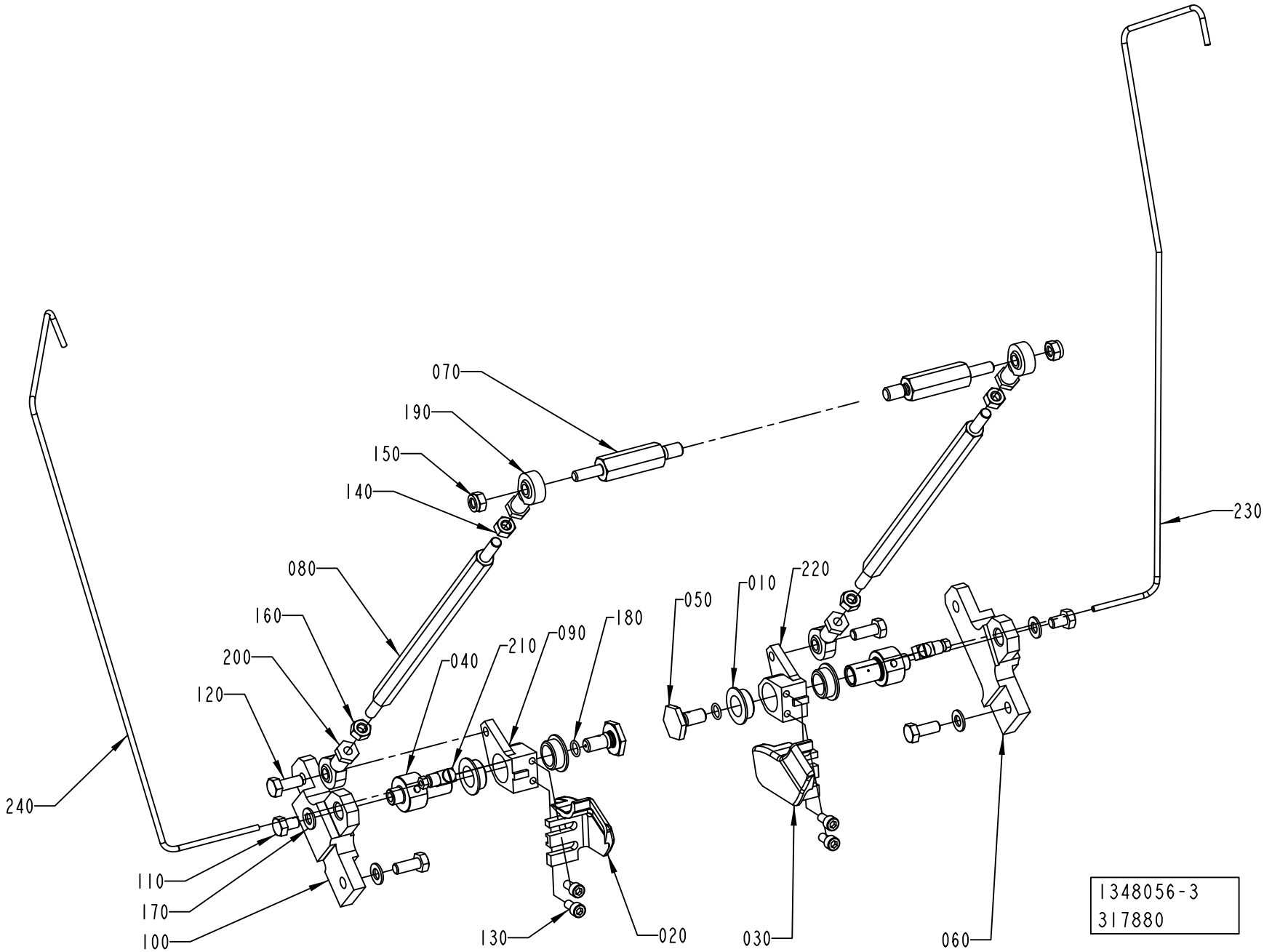
070
190
150
140
080
160
200
120
240
110
170
100
040
210
090
180
130
020
050
010
220
230
030
060
1348056-3
317880

ECM: 400954 - 20090612
Group number: 1348056-0300
Assembly Drawing: 1348056-3_1_AB

This list covers pages from 5-12 to 5-15

Pos	Part No	UN	Qty	Description	Page No
TBA 1000B STDA7 (See drawing on page: 5-12)					
020	1487922-0000		1	FOLDING DEVICE	
030	1487923-0000		1	FOLDING DEVICE	
060	1347600-0000		1	SUPPORT	
070	1499765-0000		2	AXLE LINK	
080	2609368-0000		2	TIE ROD	
090	1350440-0000		2	LEVER	
100	1350441-0000		1	SUPPORT	
TBA 1000SQ, TBA 1000S STDA7, TBA 1000S LIGHTCAP (See drawing on page: 5-12)					
020	1487922-0000		1	FOLDING DEVICE	
030	1487923-0000		1	FOLDING DEVICE	
060	1347600-0000		1	SUPPORT	
070	1499765-0000		2	AXLE LINK	
080	1499103-0000		2	TIE ROD	
090	1350440-0000		2	LEVER	
100	1350441-0000		1	SUPPORT	
TPA 0250SQ (See drawing on page: 5-12)					
020	1296180-0000		1	FOLDING DEVICE	
030	1296181-0000		1	FOLDING DEVICE	
060	1532270-0000		1	SUPPORT	
070	1532268-0000		2	AXLE LINK	
080	1532269-0000		2	TIE ROD	
090	1350440-0000		2	LEVER	
100	1532267-0000		1	SUPPORT	
TPA 0330SQ (See drawing on page: 5-12)					
020	1296180-0000		1	FOLDING DEVICE	
030	1296181-0000		1	FOLDING DEVICE	
060	1532270-0000		1	SUPPORT	
070	1532268-0000		2	AXLE LINK	
080	1532269-0000		2	TIE ROD	
090	1350440-0000		2	LEVER	
100	1532267-0000		1	SUPPORT	
TPA 0500SQ SMILE (See drawing on page: 5-14)					
020	2606277-0000		1	FOLDING DEVICE	
030	2606278-0000		1	FOLDING DEVICE	
060	2529673-0000		1	SUPPORT	
070	1532268-0000		2	AXLE LINK	
080	2527531-0000		2	TIE ROD	
090	2529676-0000		1	LEVER	
100	2529674-0000		1	SUPPORT	
220	2529675-0000		1	LEVER	
TPA 1000SQ SMILE (See drawing on page: 5-14)					
020	2529671-0000		1	FOLDING DEVICE	
030	2529672-0000		1	FOLDING DEVICE	
060	2553344-0000		1	SUPPORT	
070	2553346-0000		2	AXLE LINK	
080	2553345-0000		2	TIE ROD	
090	2529676-0000		1	LEVER	
100	2553343-0000		1	SUPPORT	
220	2529675-0000		1	LEVER	
Common Parts					
010	1282708-0000		4	BUSHING	
040	1347495-0000		2	AXLE PIN	
050	1347496-0000		2	SCREW	
110	312105-0447		2	SCREW M6S ISO 4017 M8X12 A480	
120	312105-0451		4	SCREW M6S ISO 4017 M8X20 A480	
130	312115-0366		4	SCREW ISO4762 M6X12 A4 80	
140	312605-0318		2	HEXAGON NUT, M6M M8 A280	
150	312812-0318		2	HEXAGON NUT, NY-LOCK M8 A480	
160	312902-0318		2	NUT HEX. LEFT THREAD, M8 A280	
170	315105-0165		4	WASHER BRB 8,4X16 RFR	
180	315202-0107		2	O-RING 9,1X1,6 MM	
190	90115-0139		2	ROD END, ID=8 MM, M8X1,25	
200	90115-0180		2	ROD END, ID=8 MM, M8X1,25 LH	
210	90134-0068		2	CONNECTION	
230	2868548-0000		1	PIPE	
240	2868547-0000		1	PIPE	

Machine Type | Group Description | Used-In | Group Number | Page No

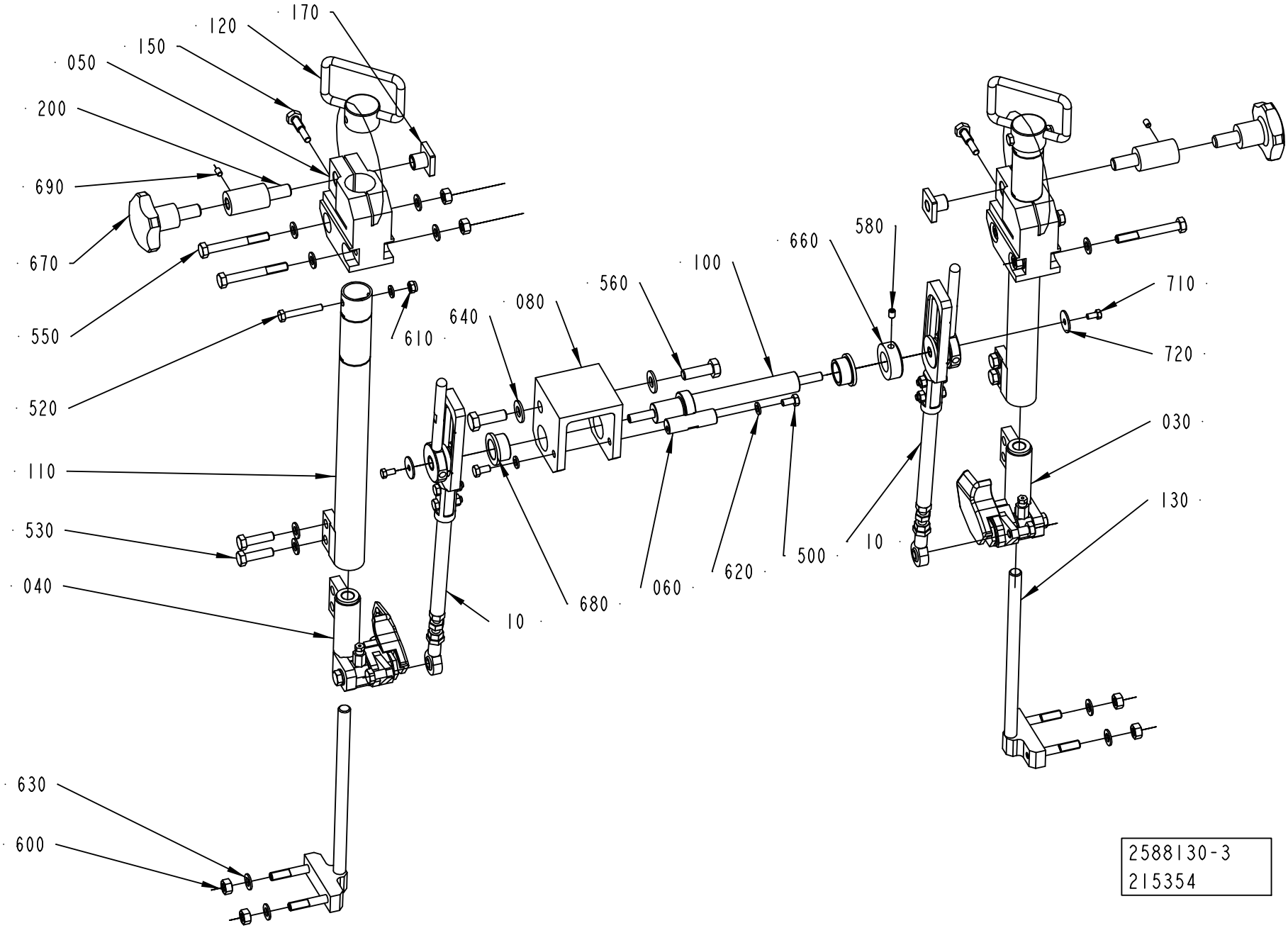
170
120
150
050
200
690
670
550
520
110
530
040
630
600
610
640
080
560
100
660
580
710
720
030
130
10
680
060
620
500
10
2588130-3
215354

ECM: 369010 - 20090101
Group number: 2588130-0100
Assembly Drawing: 2588130-3_1_AB

This list covers pages from 5-16 to 5-19

Pos	Part No	UN	Qty	Description	Page No
TBA 0200SQ, TBA 0250SQ (See drawing on page: 5-16)					
010	2619584-0100		2	STRUT	**5-21, 5-23**
080	2588134-0000		1	YOKE	
100	2647103-0000		1	SHAFT	
110	2668238-0000		2	PIPE	
140	2663371-0000		2	SCREW	
200	2739682-0000		2	SPACER SCREW	
300	312105-0366		4	SCREW M6S ISO 4017 M6X12 A480	
320	312105-0378		2	SCREW M6S ISO 4014 M6X40 A480	
337	312105-0464		4	SCREW M6S ISO 4014 M8X65 A480	
340	312105-0495		2	SCREW M6S ISO 4017 M10X30 A480	
380	312318-0362		1	SCREW ISO4029 M6X8 A4	
400	312605-0318		8	HEXAGON NUT, M6M M8 A280	
405	315105-0153		2	WASHER BRB 6,4X12 RFR	
410	315105-0153		8	WASHER BRB 6,4X12 RFR	
420	315105-0165		16	WASHER BRB 8,4X16 RFR	
430	315105-0173		2	WASHER BRB 10,5X22 RFR	
470	315742-0116		2	RETAINING RING 20 SMS 199 RFR	
475	318856-0115		2	KNOB, EXTERNAL THREAD. NO. 8306-0278	
510	312105-0325		2	SCREW M6S ISO 4017 M5X10 A480	
520	315125-0153		2	WASHER TBRSB 6,4X22X4 A4	
530	312105-0455		4	SCREW M6S ISO 4017 M8X30 A480	
580	312318-0362		1	SCREW ISO4029 M6X8 A4	
690	312318-0323		2	SCREW ISO4029 M5X8 A4	
TBA 0500SQ, TBA 1000SQ (See drawing on page: 5-18)					
010	2619584-0100		2	STRUT	**5-21, 5-23**
080	2851926-0000		1	YOKE	
100	2851927-0000		1	SHAFT	
110	2927707-0000		2	PIPE	
140	2619592-0000		1	HOLDER	
150	2663371-0000		2	SCREW	
180	2696851-0000		4	RETAINING RING	
200	2739682-0000		2	SPACER SCREW	
500	312105-0368		2	SCREW M6S ISO 4017 M6X16 A480	
520	312105-0378		2	SCREW M6S ISO 4014 M6X40 A480	
530	312105-0455		4	SCREW M6S ISO 4017 M8X30 A480	
540	312105-0457		1	SCREW M6S ISO 4014 M8X35 A480	
550	312105-0464		4	SCREW M6S ISO 4014 M8X65 A480	
560	312105-0495		2	SCREW M6S ISO 4017 M10X30 A480	
580	312318-0362		5	SCREW ISO4029 M6X8 A4	
600	312605-0318		9	HEXAGON NUT, M6M M8 A280	
610	312812-0316		2	HEXAGON NUT, NY-LOCK M6 A480	
620	315105-0153		4	WASHER BRB 6,4X12 RFR	
630	315105-0165		19	WASHER BRB 8,4X16 RFR	
640	315105-0173		2	WASHER BRB 10,5X22 RFR	
690	312318-0323		2	SCREW ISO4029 M5X8 A4	
TPA 0250SQ, TPA 0200SQ (See drawing on page: 5-16)					
010	2619584-0100		2	STRUT	**5-21, 5-23**
080	2588134-0000		1	YOKE	
100	2647103-0000		1	SHAFT	
110	2674257-0000		2	PIPE	
150	2663371-0000		2	SCREW	
200	2739682-0000		2	SPACER SCREW	
500	312105-0368		2	SCREW M6S ISO 4017 M6X16 A480	
520	312105-0378		2	SCREW M6S ISO 4014 M6X40 A480	
530	312105-0455		4	SCREW M6S ISO 4017 M8X30 A480	
550	312105-0464		4	SCREW M6S ISO 4014 M8X65 A480	
580	312318-0362		5	SCREW ISO4029 M6X8 A4	
600	312605-0318		9	HEXAGON NUT, M6M M8 A280	
610	312812-0316		2	HEXAGON NUT, NY-LOCK M6 A480	
620	315105-0153		4	WASHER BRB 6,4X12 RFR	
630	315105-0165		16	WASHER BRB 8,4X16 RFR	
640	315105-0173		2	WASHER BRB 10,5X22 RFR	
690	312318-0323		2	SCREW ISO4029 M5X8 A4	
710	312105-0325		2	SCREW M6S ISO 4017 M5X10 A480	
720	315125-0153		2	WASHER TBRSB 6,4X22X4 A4	
TPA 1000SQ, TPA 0750SQ (See drawing on page: 5-16)					
010	2619584-0100		2	STRUT	**5-21, 5-23**
080	2588134-0000		1	YOKE	
100	2647103-0000		1	SHAFT	
110	2647102-0000		2	PIPE	
150	2663371-0000		2	SCREW	
200	2739682-0000		2	SPACER SCREW	
500	312105-0368		2	SCREW M6S ISO 4017 M6X16 A480	
520	312105-0378		2	SCREW M6S ISO 4014 M6X40 A480	
530	312105-0455		4	SCREW M6S ISO 4017 M8X30 A480	
550	312105-0464		4	SCREW M6S ISO 4014 M8X65 A480	
560	312105-0495		2	SCREW M6S ISO 4017 M10X30 A480	
580	312318-0362		1	SCREW ISO4029 M6X8 A4	
600	312605-0318		8	HEXAGON NUT, M6M M8 A280	
610	312812-0316		2	HEXAGON NUT, NY-LOCK M6 A480	
620	315105-0153		4	WASHER BRB 6,4X12 RFR	
630	315105-0165		16	WASHER BRB 8,4X16 RFR	
640	315105-0173		2	WASHER BRB 10,5X22 RFR	

Machine Type | Group Description | Used-In | Group Number | Page No

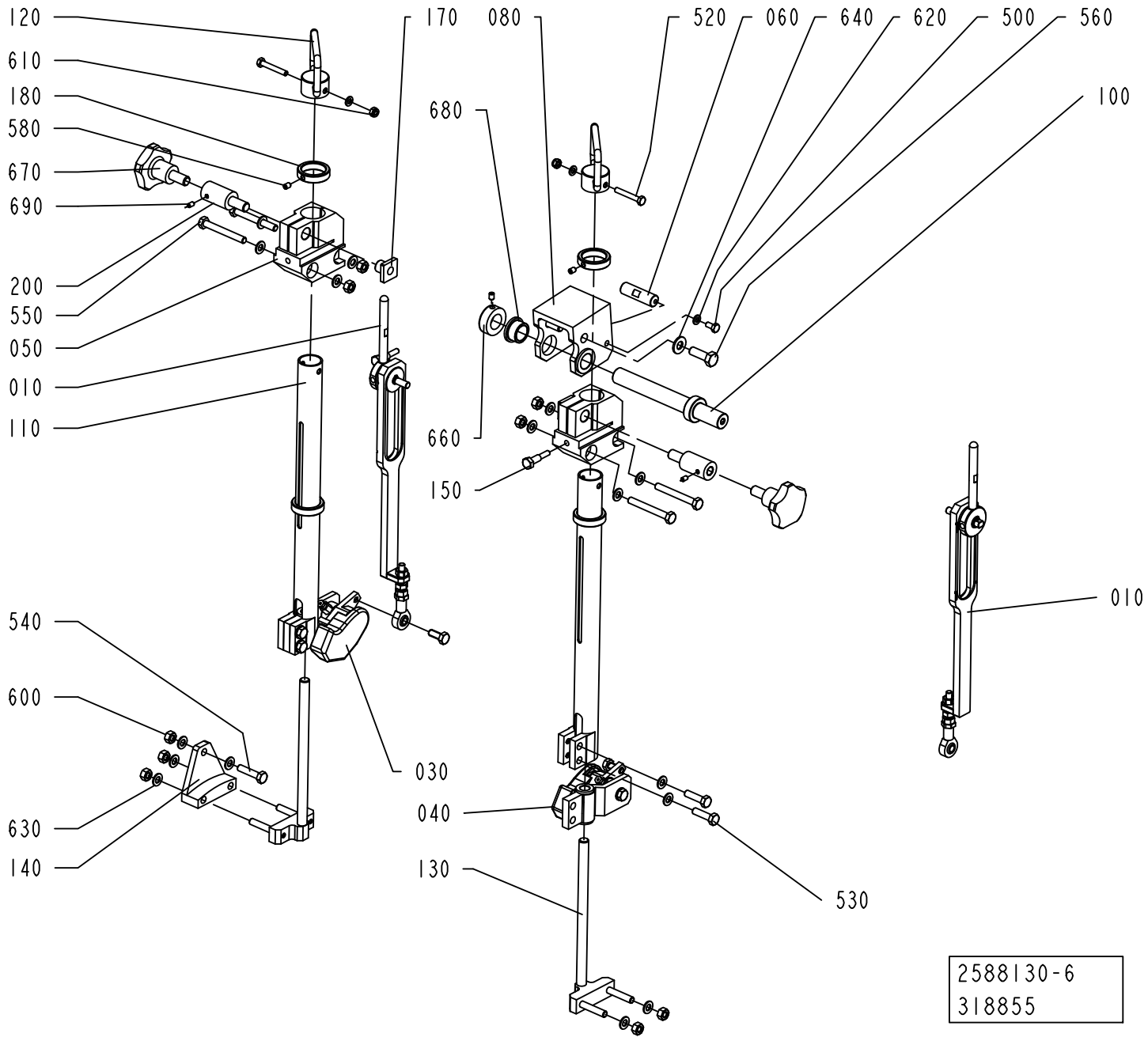
120
610
180
580
670
690
200
550
050
010
110
170
080
520
060
640
620
500
560
100
680
660
150
010
540
600
630
140
030
040
130
530
2588130-6
318855

Pos	Part No	UN	Qty	Description	Page No
TPA 1000SQ, TPA 0750SQ (Cont'd) (See drawing on page: 5-16)					
690	312318-0323		2	SCREW ISO4029 M5X8 A4	
710	312105-0325		2	SCREW M6S ISO 4017 M5X10 A480	
720	315125-0153		2	WASHER TBRSB 6,4X22X4 A4	
Common Parts					
030	2619597-0100		1	FLAP GUIDE	**5-25**
040	2619598-0100		1	FLAP GUIDE	**5-27**
050	2663369-0000		2	BLOCK	
060	2588127-0000		1	AXLE PIN	
120	2619589-0000		2	HANDLE	
130	2663370-0000		2	SUPPORT	
170	2663367-0000		2	NUT	
660	315742-0116		1	RETAINING RING 20 SMS 199 RFR	
670	318856-0115		2	KNOB, EXTERNAL THREAD. NO. 8306-0278	
680	321111-0302		2	FLANGE BUSHING, 20X26X15 MM	

Pos	Part No	UN	Qty	Description	Page No

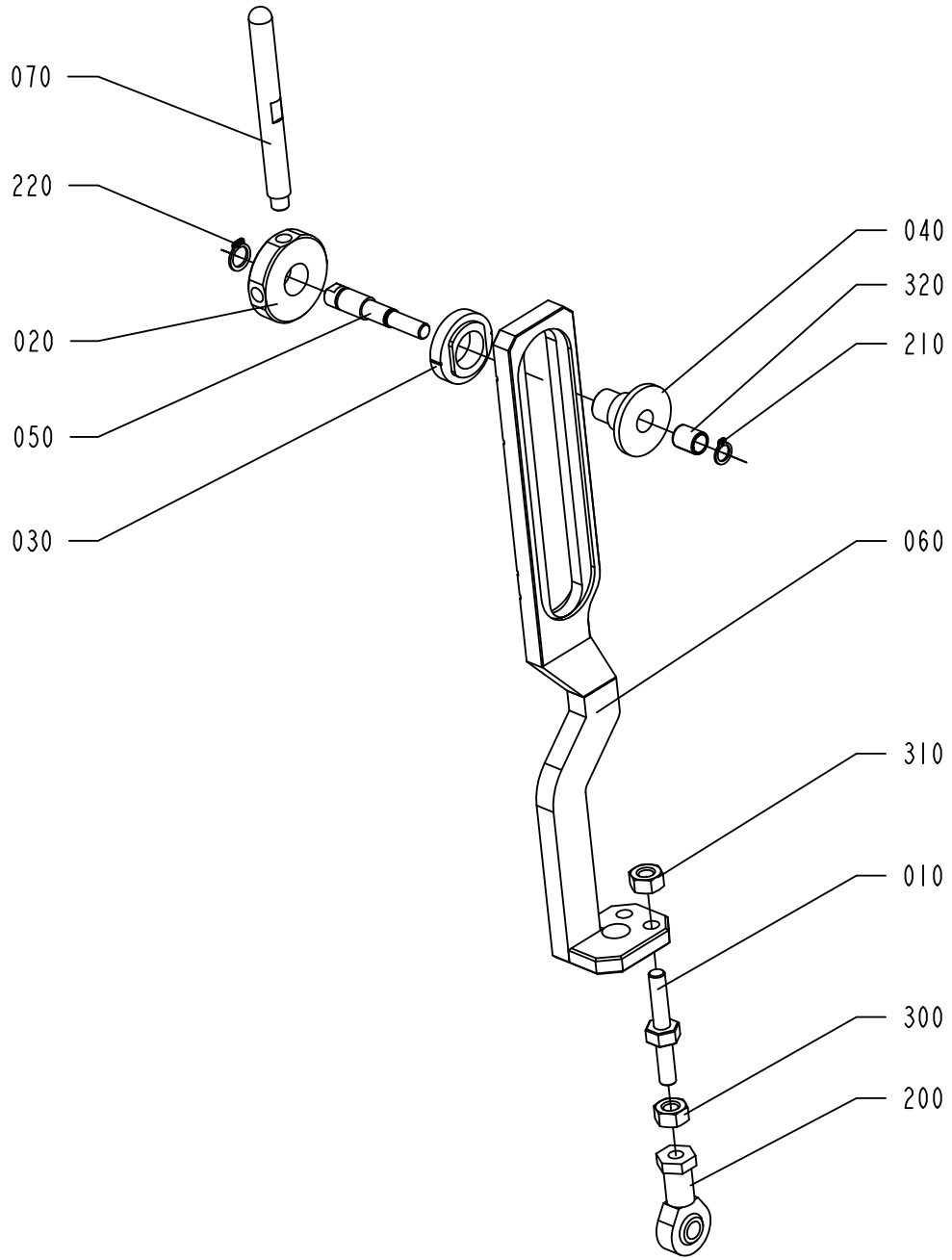
070
220
020
050
030
040
320
210
060
310
010
300
200
2619584-1
ECM 174515

ECM: 291437 - 20070205
Group number: 2619584-0100
Assembly Drawing: 2619584-1_1_AA

This list covers pages from 5-20 to 5-23

Pos	Part No	UN	Qty	Description	Page No
TBA 0200SQ, TBA 0250SQ (See drawing on page: 5-22)					
060	2668236-0000		1	LEVER	
080	2668237-0000		1	SHAFT	
200	90115-0021		1	ROD END, ID=8 MM, M8X1,25 LH	
330	312105-0372		2	SCREW M6S ISO 4017 M6X25 A480	
340	312605-0316		2	HEXAGON NUT, M6M M6 A280	
TBA 0500SQ, TBA 1000SQ (See drawing on page: 5-20)					
050	2619531-0000		1	SHAFT	
060	2851929-0000		1	STRUT	
200	90115-0020		1	ROD END, ID=8 MM, M8X1,25	
210	90141-0015		1	RETAINING RING FOR SHAFT DIN 471 8 SS	
220	90141-0016		1	RETAINING RING FOR SHAFT DIN 471 10 SS	
TPA 0250SQ, TPA 0200SQ (See drawing on page: 5-22)					
060	2674255-0000		1	STRUT	
080	2674256-0000		1	SHAFT	
200	90115-0021		1	ROD END, ID=8 MM, M8X1,25 LH	
330	312105-0372		2	SCREW M6S ISO 4017 M6X25 A480	
340	312605-0316		2	HEXAGON NUT, M6M M6 A280	
TPA 1000SQ, TPA 0750SQ (See drawing on page: 5-22)					
060	2647108-0000		1	STRUT	
080	2647109-0000		1	SHAFT	
200	90115-0021		1	ROD END, ID=8 MM, M8X1,25 LH	
330	312105-0372		2	SCREW M6S ISO 4017 M6X25 A480	
340	312605-0316		2	HEXAGON NUT, M6M M6 A280	
Common Parts					
010	2598880-0000		1	SETTING SCREW	
020	2619528-0000		1	LOCKING CIRCLIP	
030	2619529-0000		1	SLEEVE	
040	2619530-0000		1	SLEEVE	
070	2619596-0000		1	HANDLE	
300	312605-0318		1	HEXAGON NUT, M6M M8 A280	
310	312902-0318		1	NUT HEX. LEFT THREAD, M8 A280	
320	321141-0104		1	BEARING BUSH W/O FLANGE, 8X10X12 MM	

Pos	Part No	UN	Qty	Description	Page No

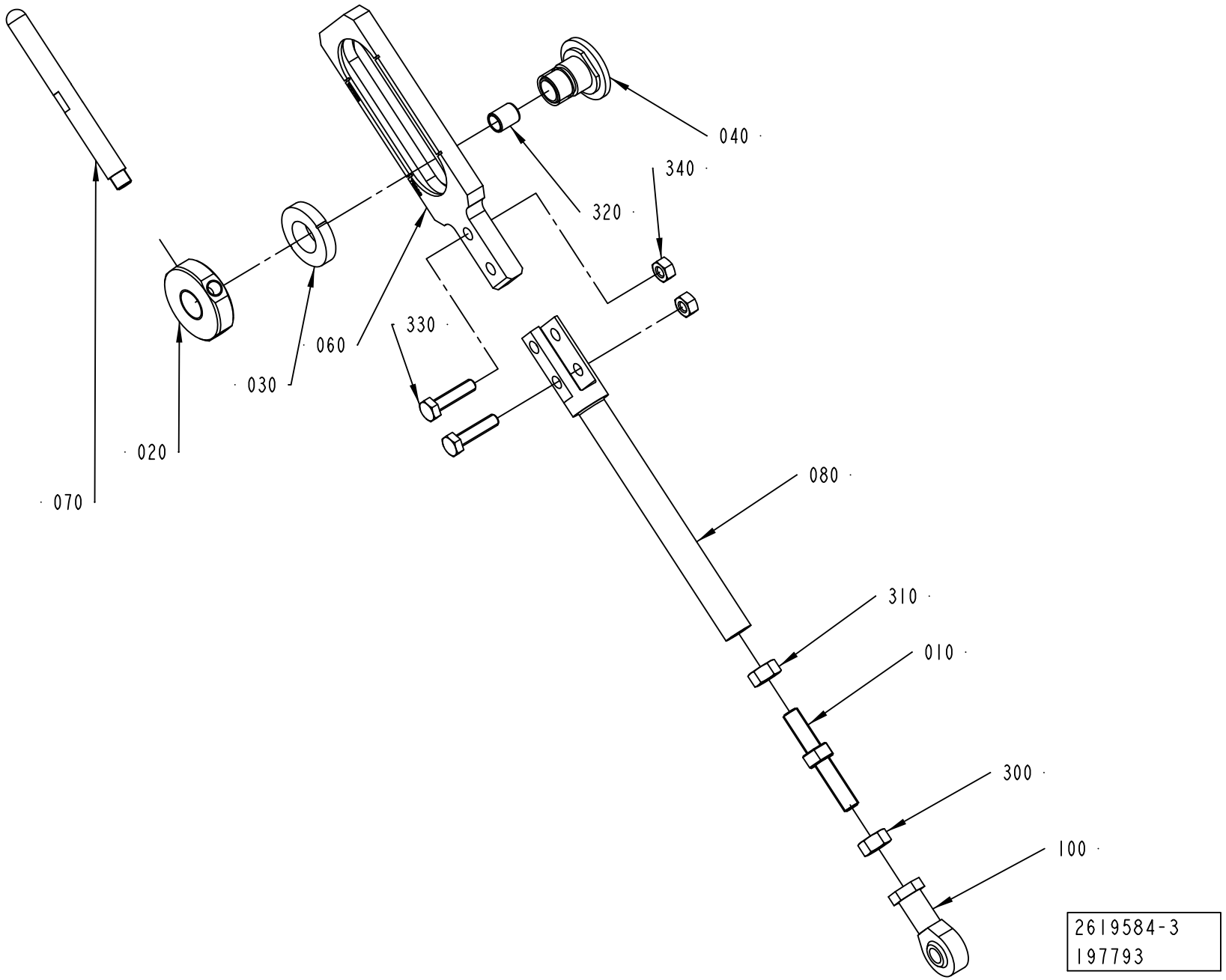
040
340
320
330
060
030
020
070
080
310
010
300
100
2619584-3
197793

ECM: 291437 - 20070205
Group number: 2619584-0100
Assembly Drawing: 2619584-3_1_AA

This list covers pages from 5-20 to 5-23

Pos	Part No	UN	Qty	Description	Page No
TBA 0200SQ, TBA 0250SQ (See drawing on page: 5-22)					
060	2668236-0000		1	LEVER	
080	2668237-0000		1	SHAFT	
200	90115-0021		1	ROD END, ID=8 MM, M8X1,25 LH	
330	312105-0372		2	SCREW M6S ISO 4017 M6X25 A480	
340	312605-0316		2	HEXAGON NUT, M6M M6 A280	
TBA 0500SQ, TBA 1000SQ (See drawing on page: 5-20)					
050	2619531-0000		1	SHAFT	
060	2851929-0000		1	STRUT	
200	90115-0020		1	ROD END, ID=8 MM, M8X1,25	
210	90141-0015		1	RETAINING RING FOR SHAFT DIN 471 8 SS	
220	90141-0016		1	RETAINING RING FOR SHAFT DIN 471 10 SS	
TPA 0250SQ, TPA 0200SQ (See drawing on page: 5-22)					
060	2674255-0000		1	STRUT	
080	2674256-0000		1	SHAFT	
200	90115-0021		1	ROD END, ID=8 MM, M8X1,25 LH	
330	312105-0372		2	SCREW M6S ISO 4017 M6X25 A480	
340	312605-0316		2	HEXAGON NUT, M6M M6 A280	
TPA 1000SQ, TPA 0750SQ (See drawing on page: 5-22)					
060	2647108-0000		1	STRUT	
080	2647109-0000		1	SHAFT	
200	90115-0021		1	ROD END, ID=8 MM, M8X1,25 LH	
330	312105-0372		2	SCREW M6S ISO 4017 M6X25 A480	
340	312605-0316		2	HEXAGON NUT, M6M M6 A280	
Common Parts					
010	2598880-0000		1	SETTING SCREW	
020	2619528-0000		1	LOCKING CIRCLIP	
030	2619529-0000		1	SLEEVE	
040	2619530-0000		1	SLEEVE	
070	2619596-0000		1	HANDLE	
300	312605-0318		1	HEXAGON NUT, M6M M8 A280	
310	312902-0318		1	NUT HEX. LEFT THREAD, M8 A280	
320	321141-0104		1	BEARING BUSH W/O FLANGE, 8X10X12 MM	

Pos	Part No	UN	Qty	Description	Page No

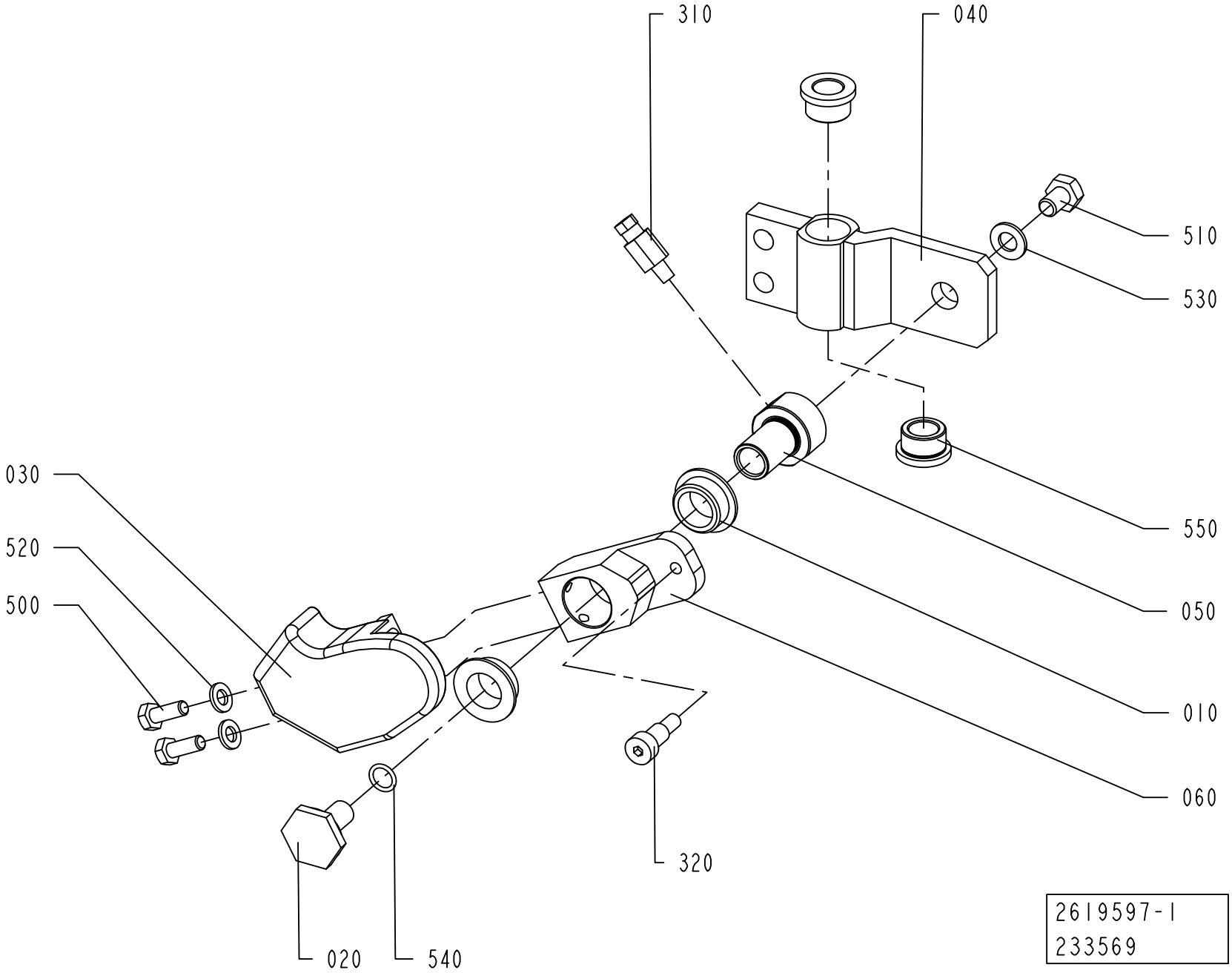
310
040
510
530
030
520
500
550
050
010
060
320
020
540
2619597-1
233569

ECM: 400956 - 20090612
Group number: 2619597-0100
Assembly Drawing: 2619597-1_1_AB

Pos	Part No	UN	Qty	Description	Page No
TBA 0200SQ, TBA 0250SQ					
030	2746790-0000		1	FOLDING DEVICE	
040	2668245-0000		1	SLIDER	
050	2647105-0000		1	AXLE PIN	
060	1350440-0000		1	LEVER	
310	90134-0065		1	CONNECTION M6 TUBE 2,5 MM	
320	312105-0451		1	SCREW M6S ISO 4017 M8X20 A480	
510	312105-0451		1	SCREW M6S ISO 4017 M8X20 A480	
TBA 0500SQ, TBA 1000SQ					
030	1487922-0000		1	FOLDING DEVICE	
040	2619591-0000		1	SLIDER	
050	2598890-0000		1	AXLE PIN	
060	1350440-0000		1	LEVER	
310	90134-0065		1	CONNECTION M6 TUBE 2,5 MM	
320	312105-0451		1	SCREW M6S ISO 4017 M8X20 A480	
510	312105-0447		1	SCREW M6S ISO 4017 M8X12 A480	
TPA 0250SQ, TPA 0200SQ					
030	2698293-0000		1	FOLDING DEVICE	
040	2674258-0000		1	SLIDER	
050	2647105-0000		1	AXLE PIN	
060	1350440-0000		1	LEVER	
310	90134-0058		1	CONNECTION	
320	312105-0451		1	SCREW M6S ISO 4017 M8X20 A480	
510	312105-0449		1	SCREW M6S ISO 4017 M8X16 A480	
TPA 1000SQ, TPA 0750SQ					
030	2529671-0000		1	FOLDING DEVICE	
040	2647107-0000		1	SLIDER	
050	2647105-0000		1	AXLE PIN	
060	2647104-0000		1	LEVER	
310	90134-0058		1	CONNECTION	
320	312105-0451		1	SCREW M6S ISO 4017 M8X20 A480	
510	312105-0447		1	SCREW M6S ISO 4017 M8X12 A480	
Common Parts					
010	1282708-0000		2	BUSHING	
020	1347496-0000		1	SCREW	
500	312115-0366		2	SCREW ISO4762 M6X12 A4 80	
520	315101-0153		2	WASHER PLAIN, BRB, 6,4/12 H=1,5	
530	315105-0165		1	WASHER BRB 8,4X16 RFR	
540	315202-0107		1	O-RING 9,1X1,6 MM	
550	321101-0173		2	FLANGE BUSHING, 12X18X12 MM	

Pos	Part No	UN	Qty	Description	Page No

Machine Type | Group Description | Used-In | Group Number | Page No

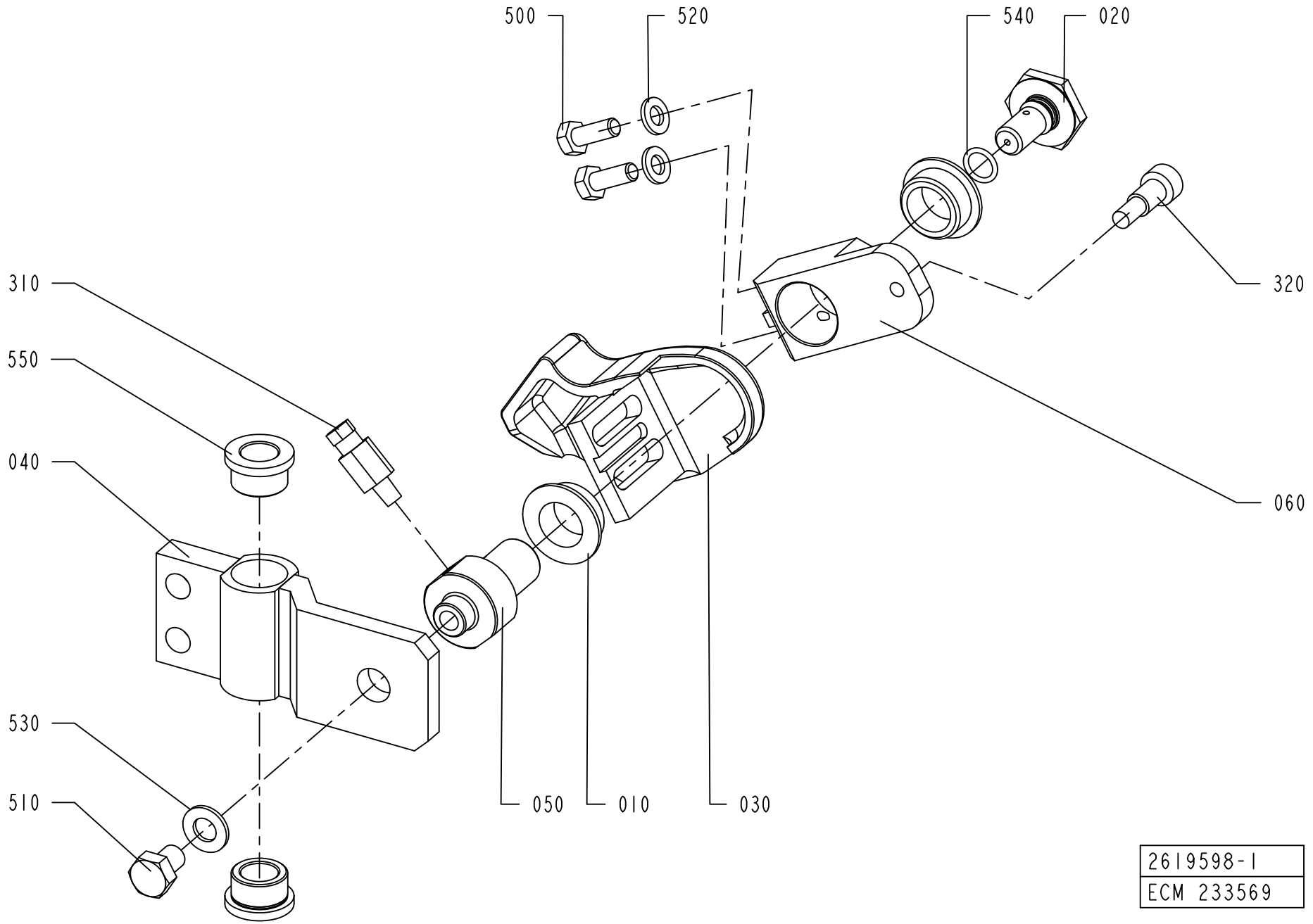
500
520
540
020
320
310
550
040
060
530
510
050
010
030
2619598-1
ECM 233569

ECM: 400957 - 20090612
Group number: 2619598-0100
Assembly Drawing: 2619598-1_1_AB

Pos	Part No	UN	Qty	Description	Page No
TBA 0200SQ, TBA 0250SQ					
030	2746791-0000		1	FOLDING DEVICE	
040	2668246-0000		1	SLIDER	
050	2647105-0000		1	AXLE PIN	
060	1350440-0000		1	LEVER	
310	90134-0065		1	CONNECTION M6 TUBE 2,5 MM	
320	312115-0451		1	SCREW ISO4762 M8X20 A4 80	
510	312105-0451		1	SCREW M6S ISO 4017 M8X20 A480	
TBA 0500SQ, TBA 1000SQ					
030	1487923-0000		1	FOLDING DEVICE	
040	2619591-0000		1	SLIDER	
050	2598890-0000		1	AXLE PIN	
060	1350440-0000		1	LEVER	
310	90134-0065		1	CONNECTION M6 TUBE 2,5 MM	
320	312115-0451		1	SCREW ISO4762 M8X20 A4 80	
510	312105-0447		1	SCREW M6S ISO 4017 M8X12 A480	
TPA 0250SQ, TPA 0200SQ					
030	2698294-0000		1	FOLDING DEVICE	
040	2674254-0000		1	SLIDER	
050	2647105-0000		1	AXLE PIN	
060	1350440-0000		1	LEVER	
310	90134-0058		1	CONNECTION	
320	312115-0451		1	SCREW ISO4762 M8X20 A4 80	
510	312105-0449		1	SCREW M6S ISO 4017 M8X16 A480	
TPA 1000SQ, TPA 0750SQ					
030	2529672-0000		1	FOLDING DEVICE	
040	2647106-0000		1	SLIDER	
050	2647105-0000		1	AXLE PIN	
060	2647104-0000		1	LEVER	
310	90134-0058		1	CONNECTION	
320	312115-0451		1	SCREW ISO4762 M8X20 A4 80	
510	312105-0447		1	SCREW M6S ISO 4017 M8X12 A480	
Common Parts					
010	1282708-0000		2	BUSHING	
020	1347496-0000		1	SCREW	
500	312115-0366		2	SCREW ISO4762 M6X12 A4 80	
520	315101-0153		2	WASHER PLAIN, BRB, 6,4/12 H=1,5	
530	315105-0165		1	WASHER BRB 8,4X16 RFR	
540	315202-0107		1	O-RING 9,1X1,6 MM	
550	321101-0173		2	FLANGE BUSHING, 12X18X12 MM	

Pos	Part No	UN	Qty	Description	Page No

Machine Type | Group Description | Used-In | Group Number | Page No

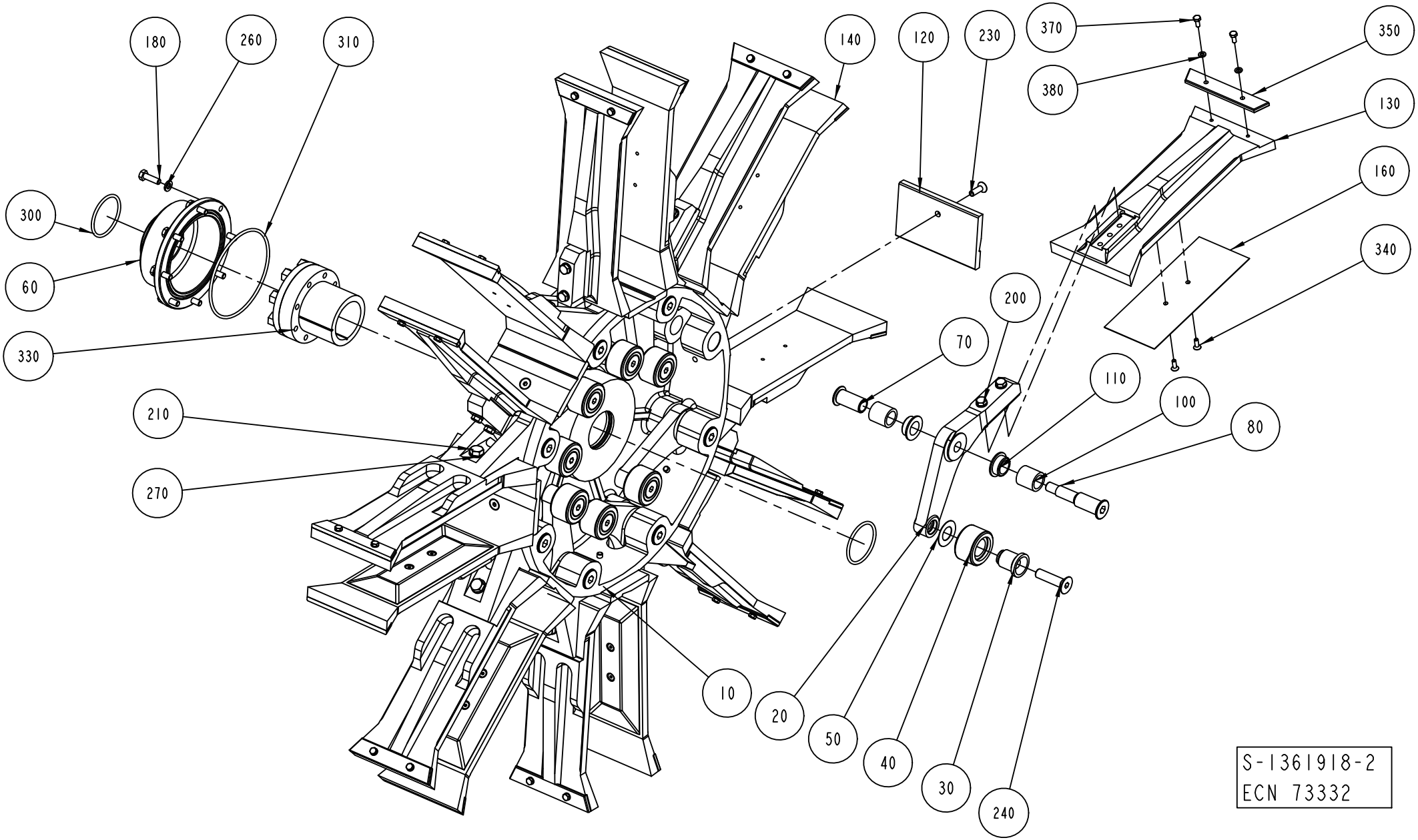
180
260
310
140
120
230
370
350
380
130
160
300
340
60
200
70
330
110
100
210
80
270
10
20
50
40
30
240
S-1361918-2
ECN 73332

ECM: 368994 - 20090101
Group number: 1361918-0300
Assembly Drawing: 1361918-2_1_AB

This list covers pages from 5-28 to 5-31

Pos	Part No	UN	Qty	Description	Page No
A3/FLEX TPA 0330SQ					
010	1144264-0000		1	HUB	
130	1532297-0000		8	FLAP	
140	1532298-0000		8	FLAP	
200	312105-0376		16	SCREW M6S ISO 4014 M6X35 A480	
210	312105-0453		8	SCREW M6S ISO 4017 M8X25 A480	
260	315105-0153		24	WASHER BRB 6,4X12 RFR	
A3/FLEX TPA 1000SQ					
010	1144264-0000		1	HUB	
120	1538770-0000		8	BOTTOM	
130	1524484-0000		8	FLAP	
140	2555404-0000		8	FLAP	
160	1523467-0000		8	VOLUME BULGE	
200	312105-0378		16	SCREW M6S ISO 4014 M6X40 A480	
210	312105-0453		8	SCREW M6S ISO 4017 M8X25 A480	
230	312155-0378		8	SCREW DIN 7991 MF6S M6X40 A4 70	
260	315105-0153		24	WASHER BRB 6,4X12 RFR	
340	312155-0289		16	SCREW DIN 7991 MF6S M4X10 A4 70	
A3/FLEX TBA 1000B STDA7					
010	1144264-0000		1	HUB	
120	2606289-0000		8	BOTTOM	
130	1260704-0000		8	FLAP	
140	1260705-0000		8	FLAP	
200	312105-0376		16	SCREW M6S ISO 4014 M6X35 A480	
210	312105-0453		8	SCREW M6S ISO 4017 M8X25 A480	
230	312155-0380		8	SCREW DIN 7991 MF6S M6X50 A4 70	
260	315105-0153		24	WASHER BRB 6,4X12 RFR	
A3/FLEX TBA 1000S LIGHTCAP					
010	1144264-0000		1	HUB	
120	2837065-0000		8	BOTTOM	
130	1144926-0000		8	FLAP	
140	1144927-0000		8	FLAP	
160	2550211-0000		8	VOLUME BULGE	
200	312105-0376		16	SCREW M6S ISO 4014 M6X35 A480	
210	312105-0453		8	SCREW M6S ISO 4017 M8X25 A480	
230	312155-0370		8	SCREW DIN 7991 MF6S M6X20 A4 70	
260	315105-0153		24	WASHER BRB 6,4X12 RFR	
340	312155-0287		16	SCREW DIN 7991 MF6S M4X8 A4 70	
A3/FLEX TBA 1000S STDA7					
010	1144264-0000		1	HUB	
120	2509938-0000		8	BOTTOM	
130	1144926-0000		8	FLAP	
140	1144927-0000		8	FLAP	
160	2550211-0000		8	VOLUME BULGE	
200	312105-0376		16	SCREW M6S ISO 4014 M6X35 A480	
210	312105-0453		8	SCREW M6S ISO 4017 M8X25 A480	
230	312155-0370		8	SCREW DIN 7991 MF6S M6X20 A4 70	
260	315105-0153		24	WASHER BRB 6,4X12 RFR	
340	312155-0287		16	SCREW DIN 7991 MF6S M4X8 A4 70	
A3/FLEX TPA 1000SQ SMILE					
010	1144264-0000		1	HUB	
120	2802612-0000		8	BOTTOM	
130	1524484-0000		8	FLAP	
140	2558145-0000		8	FLAP	
160	1523467-0000		8	VOLUME BULGE	
200	312105-0378		16	SCREW M6S ISO 4014 M6X40 A480	
210	312105-0453		8	SCREW M6S ISO 4017 M8X25 A480	
230	312155-0380		8	SCREW DIN 7991 MF6S M6X50 A4 70	
260	315103-0153		32	WASHER, BRB, 6,4/12,H=1,5 NIPL BR	
340	312155-0289		16	SCREW DIN 7991 MF6S M4X10 A4 70	
A3/FLEX TPA 500SQ LIGHTCAP					
010	1144264-0000		1	HUB	
120	2958720-0000		8	BOTTOM	
130	1549844-0000		8	FLAP	
140	2564347-0000		8	FLAP	
200	312105-0376		16	SCREW M6S ISO 4014 M6X35 A480	
210	312105-0453		8	SCREW M6S ISO 4017 M8X25 A480	
230	312105-0368		8	SCREW M6S ISO 4017 M6X16 A480	
260	315103-0153		32	WASHER, BRB, 6,4/12,H=1,5 NIPL BR	
A3/FLEX TPA 500SQ NOMOLDEDCAP					
010	1144264-0000		1	HUB	
120	2602614-0000		8	BOTTOM	
130	1549844-0000		8	FLAP	
140	2564347-0000		8	FLAP	
200	312105-0376		16	SCREW M6S ISO 4014 M6X35 A480	
230	312105-0368		8	SCREW M6S ISO 4017 M6X16 A480	
260	315103-0153		32	WASHER, BRB, 6,4/12,H=1,5 NIPL BR	
A3/FLEX TBA 0200S					
010	1144264-0000		1	HUB	
130	1260885-0000		8	FLAP	
140	1260886-0000		8	FLAP	
200	312105-0376		16	SCREW M6S ISO 4014 M6X35 A480	
210	312105-0453		8	SCREW M6S ISO 4017 M8X25 A480	
260	315105-0153		24	WASHER BRB 6,4X12 RFR	

Machine Type | Group Description | Used-In | Group Number | Page No

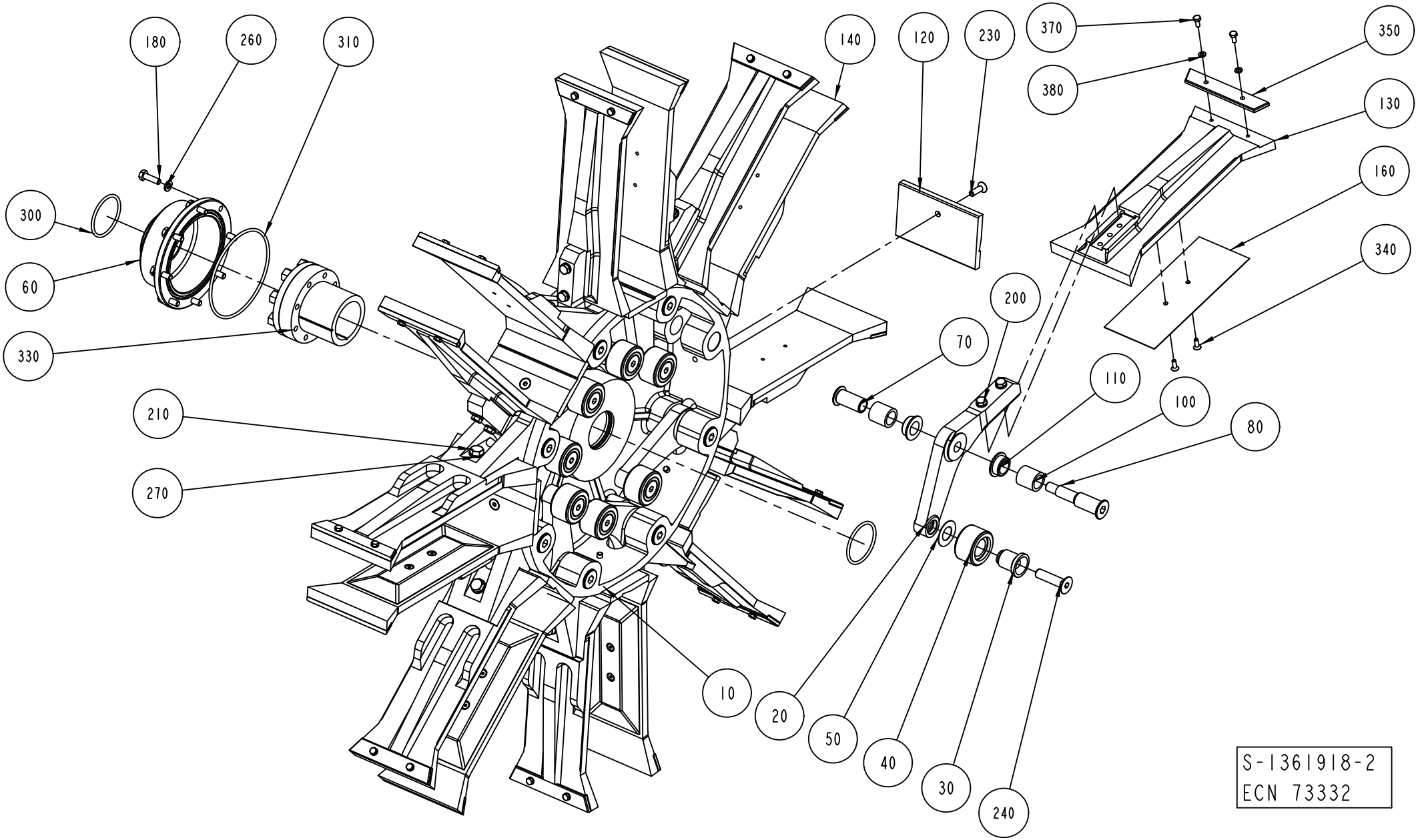
180
260
310
140
120
230
370
350
380
130
160
300
340
60
200
70
330
110
100
80
210
270
10
20
50
40
30
240
S-1361918-2
ECN 73332

ECM: 368994 - 20090101
Group number: 1361918-0300
Assembly Drawing: 1361918-2_1_AB

This list covers pages from 5-28 to 5-31

Pos	Part No	UN	Qty	Description	Page No
A3/FLEX TBA 0500S (Cont'd)					
010	1144264-0000		1	HUB	
130	1499141-0000		8	FLAP	
140	1499142-0000		8	FLAP	
160	1524035-0000		8	VOLUME BULGE	
200	312105-0376		16	SCREW M6S ISO 4014 M6X35 A480	
210	312105-0453		8	SCREW M6S ISO 4017 M8X25 A480	
260	315105-0153		24	WASHER BRB 6,4X12 RFR	
340	312155-0289		16	SCREW DIN 7991 MF6S M4X10 A4 70	
A3/FLEX TBA 1000B NOMOLDEDCAP					
010	1144264-0000		1	HUB	
120	1260703-0000		8	BOTTOM	
130	1260704-0000		8	FLAP	
140	1260705-0000		8	FLAP	
200	312105-0376		16	SCREW M6S ISO 4014 M6X35 A480	
210	312105-0453		8	SCREW M6S ISO 4017 M8X25 A480	
230	312155-0380		8	SCREW DIN 7991 MF6S M6X50 A4 70	
260	315105-0153		24	WASHER BRB 6,4X12 RFR	
A3/FLEX TBA 1000S NOMOLDEDCAP					
010	1144264-0000		1	HUB	
120	1144924-0000		8	BOTTOM	
130	1144926-0000		8	FLAP	
140	1144927-0000		8	FLAP	
160	2550211-0000		8	VOLUME BULGE	
200	312105-0376		16	SCREW M6S ISO 4014 M6X35 A480	
210	312105-0453		8	SCREW M6S ISO 4017 M8X25 A480	
230	312155-0370		8	SCREW DIN 7991 MF6S M6X20 A4 70	
260	315105-0153		24	WASHER BRB 6,4X12 RFR	
340	312155-0287		16	SCREW DIN 7991 MF6S M4X8 A4 70	
A3/FLEX TBA 1000SQ					
010	1144264-0000		1	HUB	
120	1511558-0000		8	BOTTOM	
130	1487739-0000		8	FLAP	
140	1487738-0000		8	FLAP	
200	312105-0376		16	SCREW M6S ISO 4014 M6X35 A480	
210	312105-0453		8	SCREW M6S ISO 4017 M8X25 A480	
230	312155-0370		8	SCREW DIN 7991 MF6S M6X20 A4 70	
260	315105-0153		24	WASHER BRB 6,4X12 RFR	
A3/FLEX TBA 1500S					
010	1144264-0000		1	HUB	
120	1317556-0000		8	BOTTOM	
130	1317554-0000		8	FLAP	
140	1317555-0000		8	FLAP	
200	312105-0376		16	SCREW M6S ISO 4014 M6X35 A480	
210	312105-0453		8	SCREW M6S ISO 4017 M8X25 A480	
230	312155-0376		8	SCREW DIN 7991 MF6S M6X35 A4 70	
260	315105-0153		24	WASHER BRB 6,4X12 RFR	
350	1317656-0000		16	INSERT	
370	312105-0289		32	SCREW M6S H4X10 A4 70 ISO4017/DIN933	
380	315105-0136		32	WASHER BRB 4,3X8 RFR	
Common Parts					
020	1279559-0000		8	ARM	
030	1144312-0000		8	AXLE PIN	
040	1144335-0000		8	ROLLER	
050	1144354-0000		8	WASHER	
060	1144356-0000		1	COVER	
070	1296970-0000		8	SCREW BUSHING	
080	1296969-0000		8	SCREW HOLDER	
100	1144417-0000		16	BUSHING	
110	1282708-0000		16	BUSHING	
180	312105-0370		8	SCREW M6S ISO 4017 M6X20 A480	
240	312155-0499		8	SCREW DIN 7991 MF6S M10X40 A4 70	
270	315105-0165		8	WASHER BRB 8,4X16 RFR	
300	315202-0225		2	O-RING 44,2X3 MM	
310	315202-0311		1	O-RING 99,5X3 MM	
330	90208-0087		1	CLAMPING ELEMENT WITH SLEEVE, 45X59 MM	

Machine Type | Group Description | Used-In | Group Number | Page No

FOLDING PART

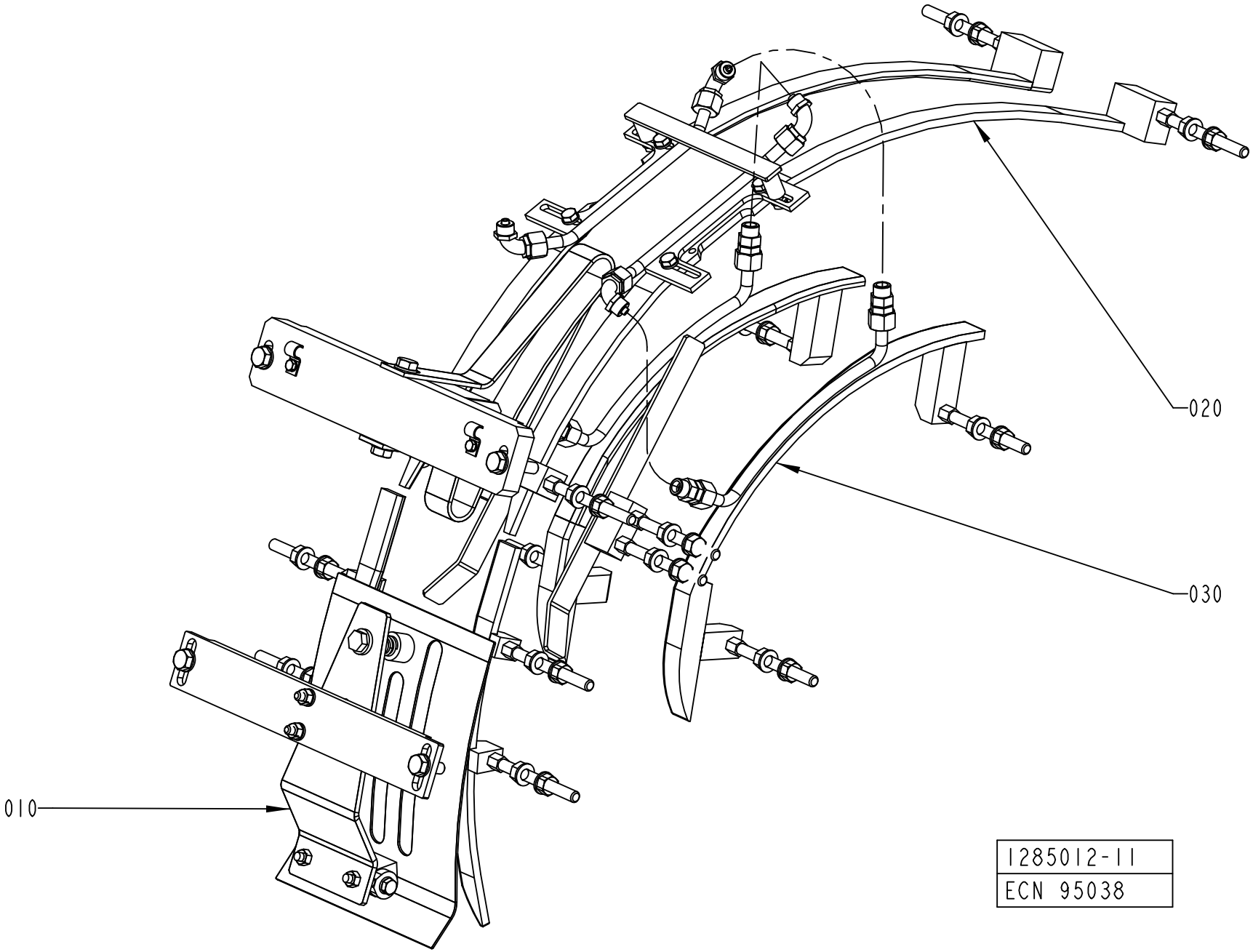

ECM: 110175 - 20030403
Group number: 1285012-0300
Assembly Drawing: 1285012-11_1_AA

Pos	Part No	UN	Qty	Description	Page No
-					
010	1558932-0100		1	TOP SECTION	**5-35, 5-37, 5-39**
020	1558935-0100		1	TOP RAIL	**5-41, 5-43, 5-45, 5-47, 5-49**
030	1558940-0200		1	FLAP GUIDE	**5-51, 5-53, 5-55, 5-57, 5-59, 5-61, 5-63**

Pos	Part No	UN	Qty	Description	Page No

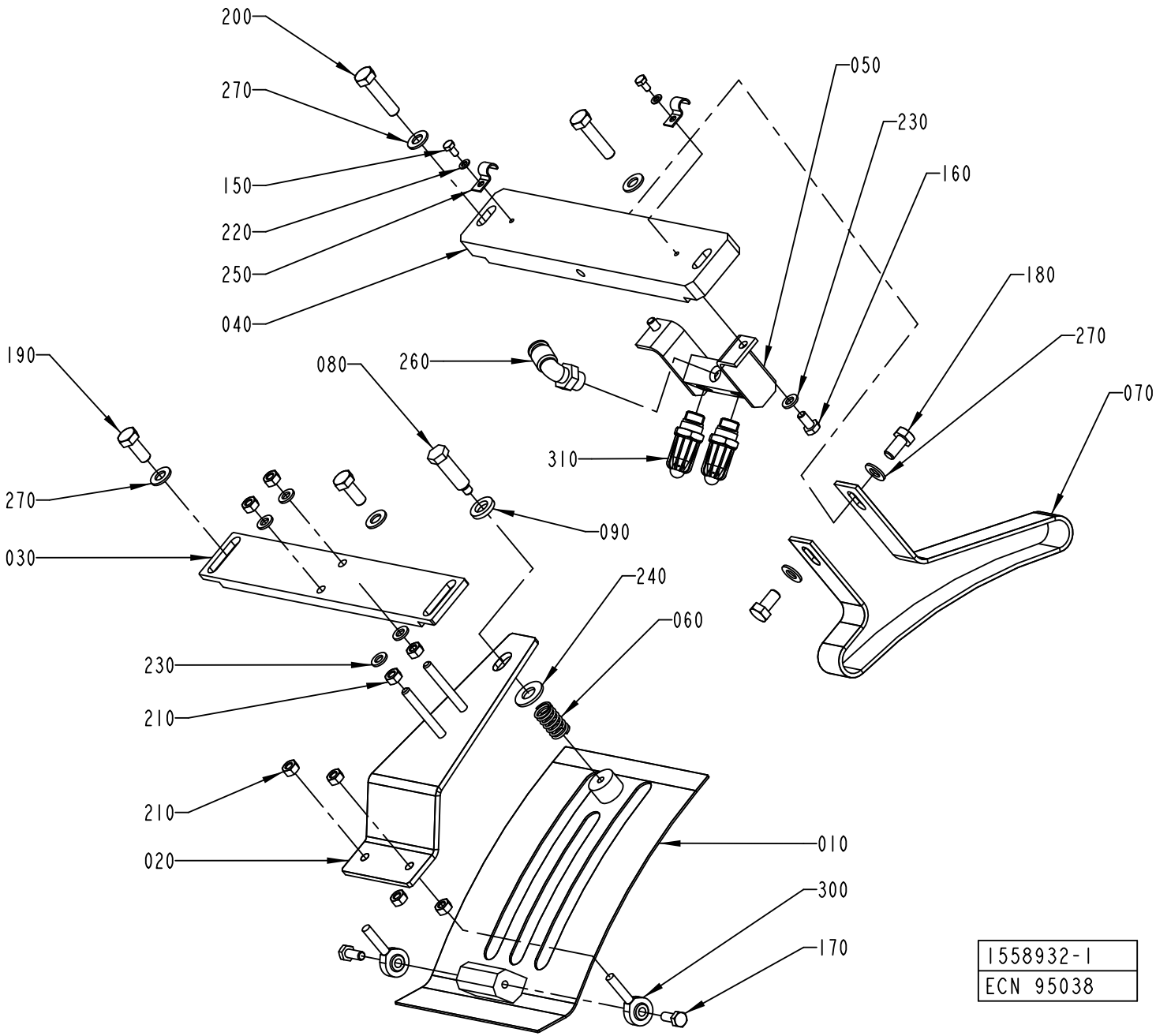
200
270
150
220
250
040
050
230
160
180
270
070
190
080
260
310
270
090
030
240
060
230
210
210
020
010
300
170
1558932-1
ECN 95038

Pos	Part No	UN	Qty	Description	Page No
TBA 0200B, TBA 0250B (See drawing on page: 5-34)					
010	1317211-0000		1	COVERING PLATE	
020	1317213-0000		1	ADJUSTING PLATE	
030	1144975-0000		1	ATTACHMENT PLATE	
040	1144902-0000		1	SUPPORT	
060	1317633-0000		1	SPRING	
150	312105-0287		2	SCREW M6S ISO 4017 M4X8 A470	
190	312105-0451		2	SCREW M6S ISO 4017 M8X20 A480	
210	312605-0316		8	HEXAGON NUT, M6M M6 A280	
220	315105-0136		2	WASHER BRB 4,3X8 RFR	
230	315105-0153		4	WASHER BRB 6,4X12 RFR	
250	90165-0057		2	PIPE CLIP FOR TUBE D=6 MM	
270	315105-0165		4	WASHER BRB 8,4X16 RFR	
TBA 0200S (See drawing on page: 5-34)					
010	1317211-0000		1	COVERING PLATE	
020	1317213-0000		1	ADJUSTING PLATE	
030	1144975-0000		1	ATTACHMENT PLATE	
040	1144902-0000		1	SUPPORT	
060	1317633-0000		1	SPRING	
070	1144901-0000		1	GUIDE	
150	312105-0287		2	SCREW M6S ISO 4017 M4X8 A470	
180	312105-0449		2	SCREW M6S ISO 4017 M8X16 A480	
190	312105-0451		2	SCREW M6S ISO 4017 M8X20 A480	
210	312605-0316		8	HEXAGON NUT, M6M M6 A280	
220	315105-0136		2	WASHER BRB 4,3X8 RFR	
230	315105-0153		4	WASHER BRB 6,4X12 RFR	
250	90165-0057		2	PIPE CLIP FOR TUBE D=6 MM	
270	315105-0165		6	WASHER BRB 8,4X16 RFR	
TBA 0250S (See drawing on page: 5-38)					
010	1317211-0000		1	COVERING PLATE	
020	1317213-0000		1	ADJUSTING PLATE	
030	1144975-0000		1	ATTACHMENT PLATE	
040	1144902-0000		1	SUPPORT	
060	90335-0036		1	COMP. SPRING 22450, 1,6X14,1X24	
070	2555637-0000		1	GUIDE	
150	312105-0287		2	SCREW M6S ISO 4017 M4X8 A470	
180	312105-0451		1	SCREW M6S ISO 4017 M8X20 A480	
190	312105-0451		2	SCREW M6S ISO 4017 M8X20 A480	
210	312605-0316		8	HEXAGON NUT, M6M M6 A280	
220	315105-0136		2	WASHER BRB 4,3X8 RFR	
230	315105-0153		4	WASHER BRB 6,4X12 RFR	
250	90165-0057		2	PIPE CLIP FOR TUBE D=6 MM	
270	315105-0165		6	WASHER BRB 8,4X16 RFR	
TBA 0330S (See drawing on page: 5-38)					
010	1317211-0000		1	COVERING PLATE	
020	1317213-0000		1	ADJUSTING PLATE	
030	1144975-0000		1	ATTACHMENT PLATE	
040	1144902-0000		1	SUPPORT	
050	1349087-0000		1	DISTRIBUTOR	
060	90335-0036		1	COMP. SPRING 22450, 1,6X14,1X24	
070	2552022-0000		1	GUIDE	
150	312105-0287		2	SCREW M6S ISO 4017 M4X8 A470	
160	312105-0366		2	SCREW M6S ISO 4017 M6X12 A480	
180	312105-0451		1	SCREW M6S ISO 4017 M8X20 A480	
190	312105-0451		2	SCREW M6S ISO 4017 M8X20 A480	
210	312605-0316		8	HEXAGON NUT, M6M M6 A280	
220	315105-0136		2	WASHER BRB 4,3X8 RFR	
230	315105-0153		6	WASHER BRB 6,4X12 RFR	
250	90165-0057		2	PIPE CLIP FOR TUBE D=6 MM	
260	90458-2958		1	ELBOW PIPE JOINT, EXT.THREAD, D=8MM-G1/4	
270	315105-0165		6	WASHER BRB 8,4X16 RFR	
310	90424-0068		1	AIR NOZZLE, G1/4, MOD. 216 BSP	
320	2553284-0000		1	BLOCK	
TBA 0500S, TBA 0500B, TBA 1000B, TBA 1000S (See drawing on page: 5-34)					
010	1144941-0000		1	COVERING PLATE	
020	1144974-0000		1	ADJUSTING PLATE	
030	1144975-0000		1	ATTACHMENT PLATE	
040	1144902-0000		1	SUPPORT	
050	1285014-0000		1	DISTRIBUTOR	
060	90335-0036		1	COMP. SPRING 22450, 1,6X14,1X24	
070	1144901-0000		1	GUIDE	
150	312105-0287		2	SCREW M6S ISO 4017 M4X8 A470	
160	312105-0366		2	SCREW M6S ISO 4017 M6X12 A480	
180	312105-0449		2	SCREW M6S ISO 4017 M8X16 A480	
190	312105-0451		2	SCREW M6S ISO 4017 M8X20 A480	
210	312605-0316		8	HEXAGON NUT, M6M M6 A280	
220	315105-0136		2	WASHER BRB 4,3X8 RFR	
230	315105-0153		6	WASHER BRB 6,4X12 RFR	
250	90165-0057		2	PIPE CLIP FOR TUBE D=6 MM	
260	90458-2958		1	ELBOW PIPE JOINT, EXT.THREAD, D=8MM-G1/4	
270	315105-0165		6	WASHER BRB 8,4X16 RFR	
310	90424-0068		2	AIR NOZZLE, G1/4, MOD. 216 BSP	
TBA 1000SQ (See drawing on page: 5-34)					
010	1144941-0000		1	COVERING PLATE	

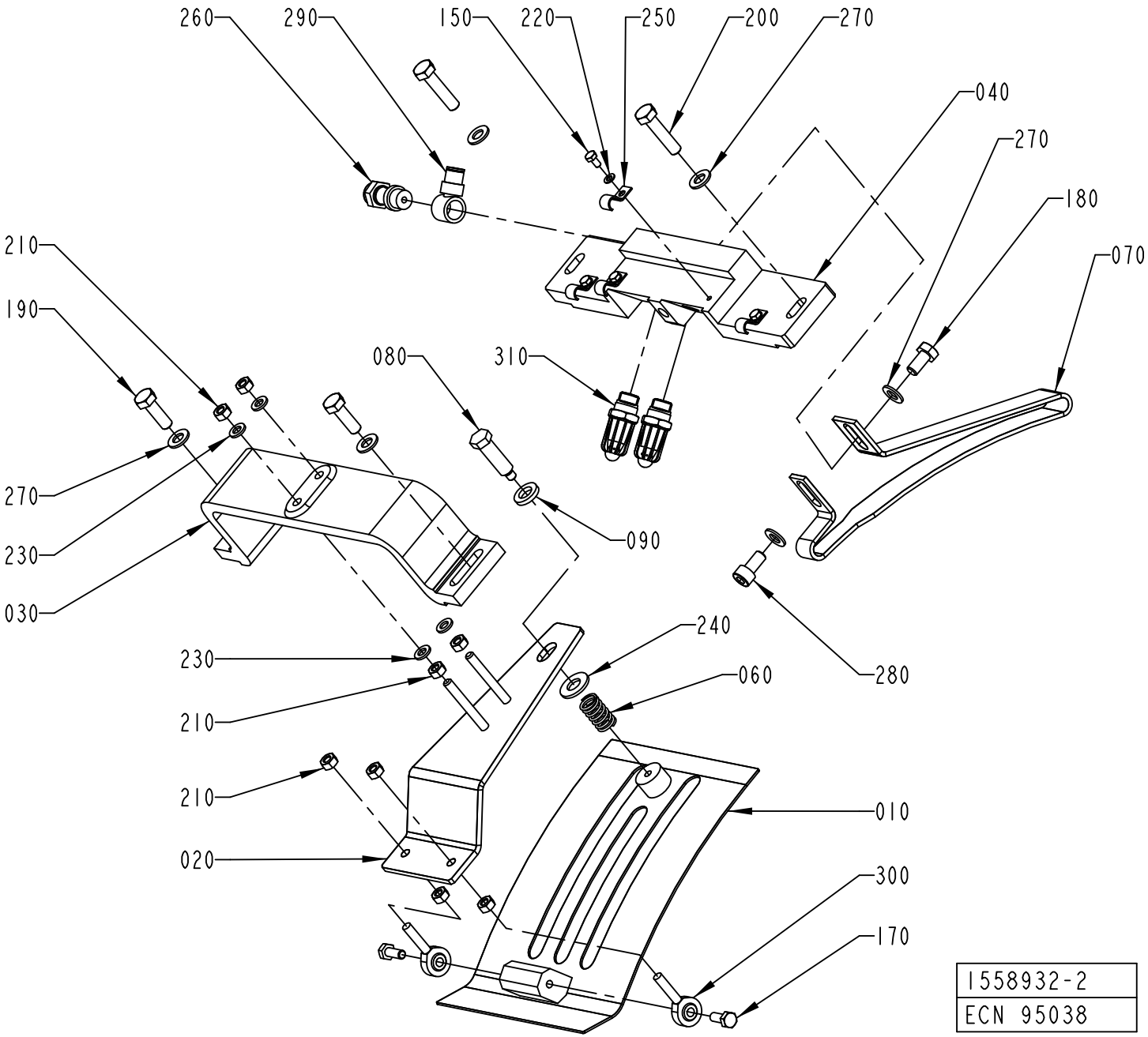
260
290
150
220
250
200
270
040
270
180
070
210
190
080
310
270
230
030
090
240
230
060
280
210
210
020
010
300
170
1558932-2
ECN 95038

Pos	Part No	UN	Qty	Description	Page No
TBA 1000SQ (Cont'd) (See drawing on page: 5-34)					
020	1144974-0000		1	ADJUSTING PLATE	
030	1144975-0000		1	ATTACHMENT PLATE	
040	1144902-0000		1	SUPPORT	
050	1349087-0000		1	DISTRIBUTOR	
060	90335-0036		1	COMP. SPRING 22450, 1,6X14,1X24	
150	312105-0287		2	SCREW M6S ISO 4017 M4X8 A470	
160	312105-0366		2	SCREW M6S ISO 4017 M6X12 A480	
190	312105-0451		2	SCREW M6S ISO 4017 M8X20 A480	
210	312605-0316		8	HEXAGON NUT, M6M M6 A280	
220	315105-0136		2	WASHER BRB 4,3X8 RFR	
230	315105-0153		6	WASHER BRB 6,4X12 RFR	
250	90165-0057		2	PIPE CLIP FOR TUBE D=6 MM	
260	90458-2958		1	ELBOW PIPE JOINT, EXT.THREAD, D=8MM-G1/4	
270	315105-0165		6	WASHER BRB 8,4X16 RFR	
310	90424-0068		1	AIR NOZZLE, G1/4, MOD. 216 BSP	
TBA 1500S (See drawing on page: 5-36)					
010	1144941-0000		1	COVERING PLATE	
020	1144974-0000		1	ADJUSTING PLATE	
030	1285299-0000		1	BRACKET	
040	1334480-0000		1	SUPPORT	
060	90335-0036		1	COMP. SPRING 22450, 1,6X14,1X24	
070	1347057-0000		1	GUIDE	
150	312105-0287		4	SCREW M6S ISO 4017 M4X8 A470	
180	312105-0449		1	SCREW M6S ISO 4017 M8X16 A480	
190	312105-0453		2	SCREW M6S ISO 4017 M8X25 A480	
210	312605-0316		8	HEXAGON NUT, M6M M6 A280	
220	315105-0136		4	WASHER BRB 4,3X8 RFR	
230	315105-0153		4	WASHER BRB 6,4X12 RFR	
250	90165-0057		4	PIPE CLIP FOR TUBE D=6 MM	
260	90235-0731		1	THROTTLE CHECK VALVE, G1/4", SCO-606-1/4	
270	315105-0165		6	WASHER BRB 8,4X16 RFR	
280	312115-0449		1	SCREW ISO4762 M8X16 A4 80	
290	342981-0122		1	BANJO CONNEC,RING,FOR PLAST.TUBE 8-G1/4"	
310	90424-0068		2	AIR NOZZLE, G1/4, MOD. 216 BSP	
TPA 0250SQ (See drawing on page: 5-34)					
010	1317211-0000		1	COVERING PLATE	
020	1317213-0000		1	ADJUSTING PLATE	
030	1144975-0000		1	ATTACHMENT PLATE	
040	1144902-0000		1	SUPPORT	
060	90335-0036		1	COMP. SPRING 22450, 1,6X14,1X24	
070	2555637-0000		1	GUIDE	
150	312105-0287		2	SCREW M6S ISO 4017 M4X8 A470	
180	312105-0449		2	SCREW M6S ISO 4017 M8X16 A480	
190	312105-0451		2	SCREW M6S ISO 4017 M8X20 A480	
210	312605-0316		8	HEXAGON NUT, M6M M6 A280	
220	315105-0136		2	WASHER BRB 4,3X8 RFR	
230	315105-0153		4	WASHER BRB 6,4X12 RFR	
250	90165-0057		2	PIPE CLIP FOR TUBE D=6 MM	
270	315105-0165		6	WASHER BRB 8,4X16 RFR	
TPA 0330SQ (See drawing on page: 5-34)					
010	1317211-0000		1	COVERING PLATE	
020	1317213-0000		1	ADJUSTING PLATE	
030	1144975-0000		1	ATTACHMENT PLATE	
040	1144902-0000		1	SUPPORT	
050	1349087-0000		1	DISTRIBUTOR	
060	90335-0036		1	COMP. SPRING 22450, 1,6X14,1X24	
070	1558934-0000		1	GUIDE	
150	312105-0287		2	SCREW M6S ISO 4017 M4X8 A470	
160	312105-0366		2	SCREW M6S ISO 4017 M6X12 A480	
180	312105-0449		1	SCREW M6S ISO 4017 M8X16 A480	
190	312105-0451		2	SCREW M6S ISO 4017 M8X20 A480	
210	312605-0316		8	HEXAGON NUT, M6M M6 A280	
220	315105-0136		2	WASHER BRB 4,3X8 RFR	
230	315105-0153		6	WASHER BRB 6,4X12 RFR	
250	90165-0057		2	PIPE CLIP FOR TUBE D=6 MM	
260	90458-2958		1	ELBOW PIPE JOINT, EXT.THREAD, D=8MM-G1/4	
270	315105-0165		5	WASHER BRB 8,4X16 RFR	
310	90424-0068		1	AIR NOZZLE, G1/4, MOD. 216 BSP	
TPA 0500SQ (See drawing on page: 5-38)					
010	1548612-0000		1	COVERING PLATE	
020	1144974-0000		1	ADJUSTING PLATE	
030	1144975-0000		1	ATTACHMENT PLATE	
040	1144902-0000		1	SUPPORT	
050	1349087-0000		1	DISTRIBUTOR	
060	90335-0036		1	COMP. SPRING 22450, 1,6X14,1X24	
070	2552022-0000		1	GUIDE	
150	312105-0287		2	SCREW M6S ISO 4017 M4X8 A470	
160	312105-0366		2	SCREW M6S ISO 4017 M6X12 A480	
180	312105-0451		1	SCREW M6S ISO 4017 M8X20 A480	
190	312105-0451		2	SCREW M6S ISO 4017 M8X20 A480	
210	312605-0316		8	HEXAGON NUT, M6M M6 A280	
220	315105-0136		2	WASHER BRB 4,3X8 RFR	
230	315105-0153		6	WASHER BRB 6,4X12 RFR	

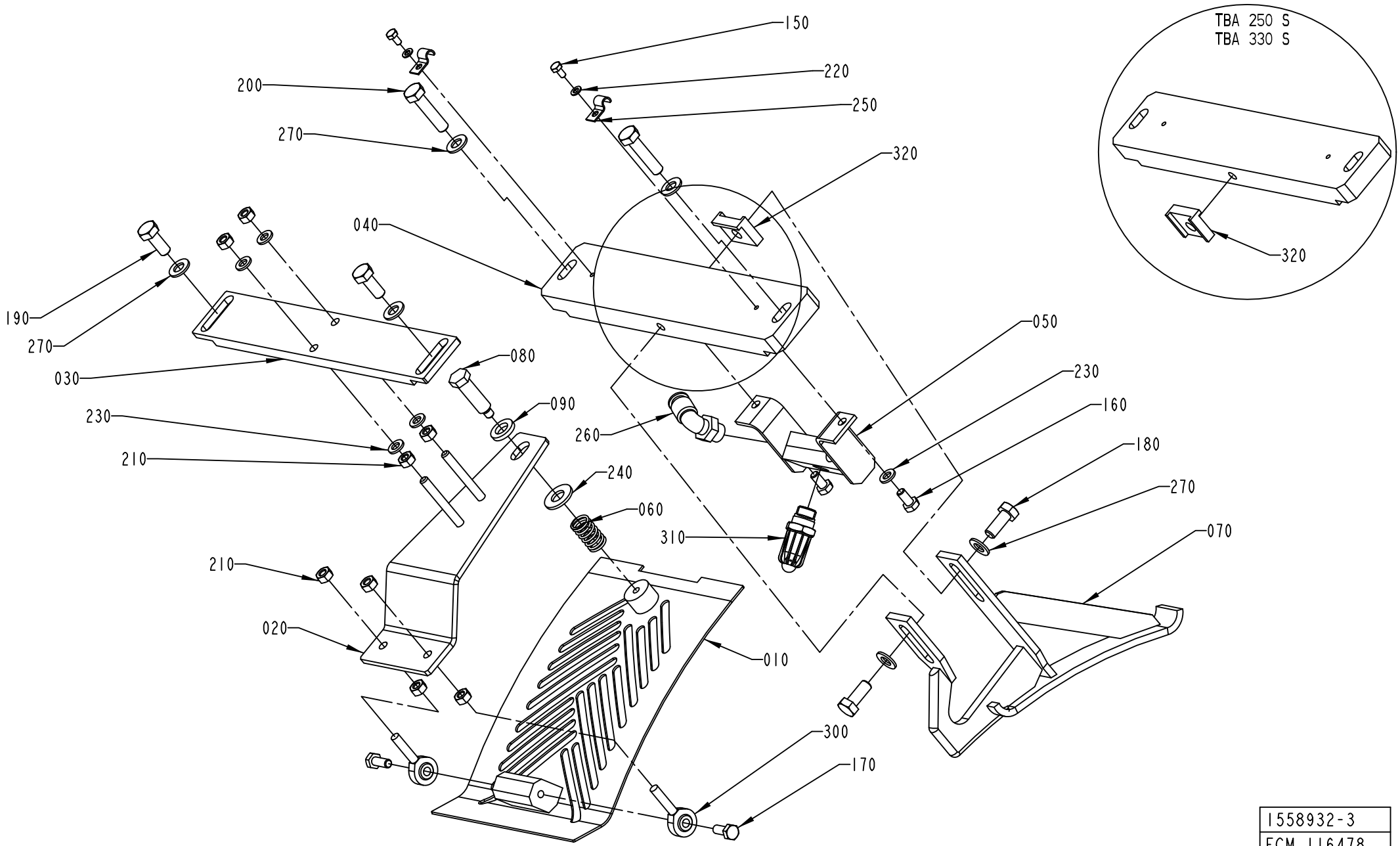

1558932-3
ECM 116478

Pos	Part No	UN	Qty	Description	Page No
TPA 0500SQ (Cont'd) (See drawing on page: 5-38)					
250	90165-0057		2	PIPE CLIP FOR TUBE D=6 MM	
260	90458-2958		1	ELBOW PIPE JOINT, EXT.THREAD, D=8MM-G1/4	
270	315105-0165		6	WASHER BRB 8,4X16 RFR	
310	90424-0068		1	AIR NOZZLE, G1/4, MOD. 216 BSP	
320	2553284-0000		1	BLOCK	
TPA 1000SQ (See drawing on page: 5-36)					
010	1548612-0000		1	COVERING PLATE	
020	1144974-0000		1	ADJUSTING PLATE	
030	1285299-0000		1	BRACKET	
040	2618424-0000		1	SUPPORT	
060	90335-0036		1	COMP. SPRING 22450, 1,6X14,1X24	
070	2618425-0000		1	GUIDE	
150	312105-0287		4	SCREW M6S ISO 4017 M4X8 A470	
180	312105-0449		1	SCREW M6S ISO 4017 M8X16 A480	
190	312105-0453		2	SCREW M6S ISO 4017 M8X25 A480	
210	312605-0316		10	HEXAGON NUT, M6M M6 A280	
220	315105-0136		4	WASHER BRB 4,3X8 RFR	
230	315105-0153		4	WASHER BRB 6,4X12 RFR	
250	90165-0057		4	PIPE CLIP FOR TUBE D=6 MM	
260	90235-0731		1	THROTTLE CHECK VALVE, G1/4", SCO-606-1/4	
270	315105-0165		5	WASHER BRB 8,4X16 RFR	
280	312115-0449		1	SCREW ISO4762 M8X16 A4 80	
290	342981-0122		1	BANJO CONNEC,RING,FOR PLAST.TUBE 8-G1/4"	
310	90424-0068		2	AIR NOZZLE, G1/4, MOD. 216 BSP	
Common Parts					
080	1144976-0000		1	STOP SCREW	
090	1144979-0000		1	WASHER	
170	312105-0368		2	SCREW M6S ISO 4017 M6X16 A480	
200	312105-0457		2	SCREW M6S ISO 4014 M8X35 A480	
240	315105-0173		1	WASHER BRB 10,5X22 RFR	
300	90115-0137		2	ROD END, ID=6 MM, M6X1	

Pos	Part No	UN	Qty	Description	Page No

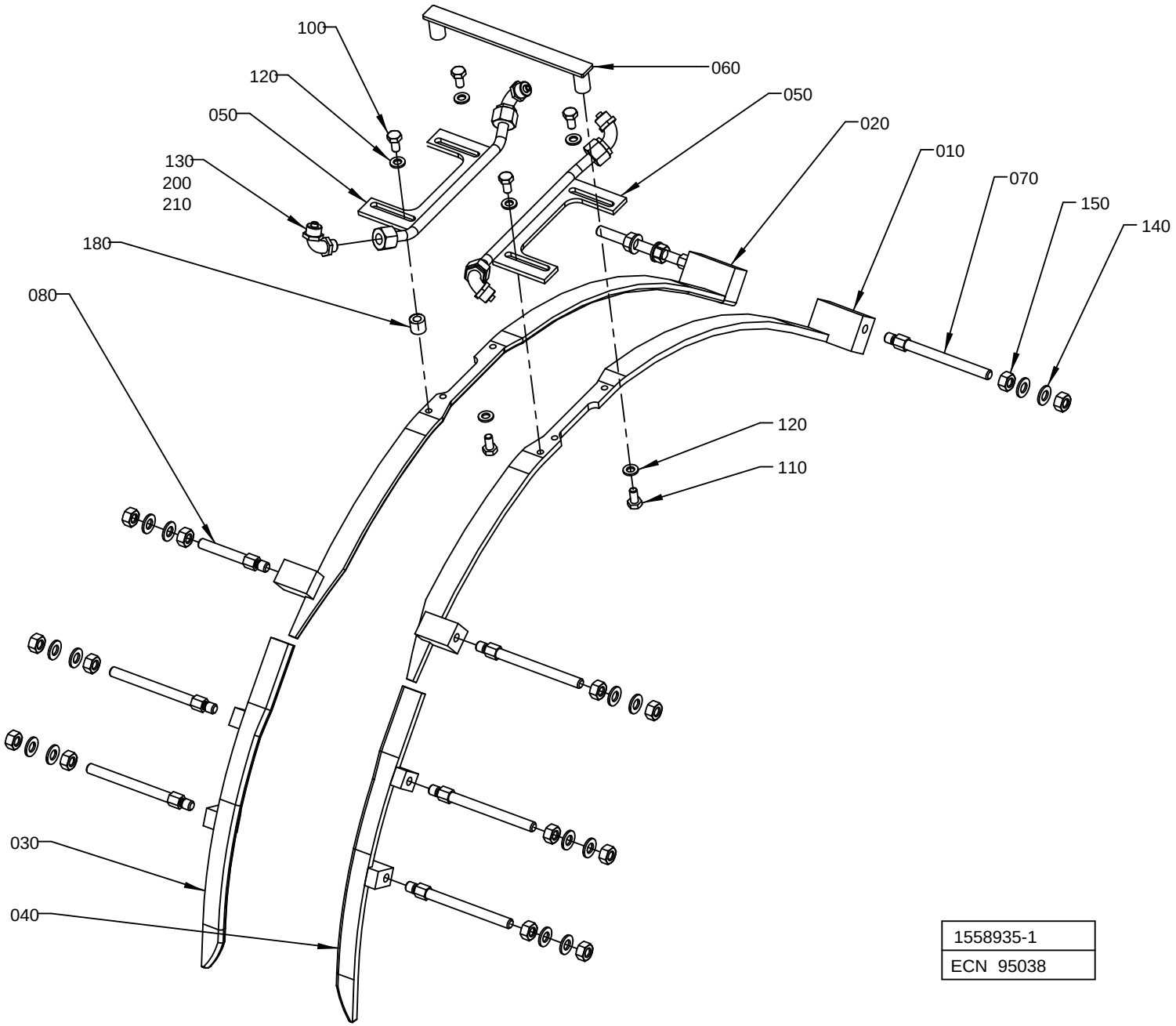

1558935-1
ECN 95038

ECM: 369001 - 20090101
Group number: 1558935-0100
Assembly Drawing: 1558935-1_1_AA

This list covers pages from 5-40 to 5-49

Pos	Part No	UN	Qty	Description	Page No
TBA 0200B, TBA 0200S, TBA 0250B (See drawing on page: 5-40)					
010	1478926-0000		1	GUIDE RIGHT	
020	1478927-0000		1	GUIDE LEFT	
030	1334013-0000		1	GUIDE UPPER R	
040	1334012-0000		1	GUIDE UPPER L	
060	1346340-0000		1	BRACKET	
070	1144555-0000		7	STUD SCREW	
080	1334523-0000		1	SUPPORT	
100	312105-0366		4	SCREW M6S ISO 4017 M6X12 A480	
140	315105-0165		16	WASHER BRB 8,4X16 RFR	
150	312605-0318		16	HEXAGON NUT, M6M M8 A280	
TBA 0250S (See drawing on page: 5-40)					
010	1478926-0000		1	GUIDE RIGHT	
020	1478927-0000		1	GUIDE LEFT	
030	1539900-0000		1	RIGHT UPPER GUIDE	
040	1549614-0000		1	LEFT UPPER GUIDE	
060	1346340-0000		1	BRACKET	
070	1144555-0000		7	STUD SCREW	
080	1334523-0000		1	SUPPORT	
100	312105-0366		4	SCREW M6S ISO 4017 M6X12 A480	
140	315105-0165		16	WASHER BRB 8,4X16 RFR	
150	312605-0318		16	HEXAGON NUT, M6M M8 A280	
TBA 0330S (See drawing on page: 5-40)					
010	1144892-0000		1	GUIDE RIGHT	
020	1144893-0000		1	GUIDE LEFT	
030	1539900-0000		1	RIGHT UPPER GUIDE	
040	1549614-0000		1	LEFT UPPER GUIDE	
060	1346340-0000		1	BRACKET	
070	1144555-0000		8	STUD SCREW	
100	312105-0366		4	SCREW M6S ISO 4017 M6X12 A480	
140	315105-0165		16	WASHER BRB 8,4X16 RFR	
150	312605-0318		16	HEXAGON NUT, M6M M8 A280	
TBA 0500B (See drawing on page: 5-44)					
010	1144892-0000		1	GUIDE RIGHT	
020	1144893-0000		1	GUIDE LEFT	
030	1539900-0000		1	RIGHT UPPER GUIDE	
040	1549614-0000		1	LEFT UPPER GUIDE	
060	1144905-0000		1	SUPPORT	
090	1539871-0000		4	SPACER	
095	1334447-0000		4	SPACER	
140	315105-0165		8	WASHER BRB 8,4X16 RFR	
160	312105-0465		8	SCREW M6S ISO 4014 M8X70 A480	
TBA 0500S (See drawing on page: 5-44)					
010	1144892-0000		1	GUIDE RIGHT	
020	1144893-0000		1	GUIDE LEFT	
030	1260709-0000		1	GUIDE UPPER R	
040	1260710-0000		1	GUIDE UPPER L	
060	1144905-0000		1	SUPPORT	
090	1499071-0000		4	SPACER	
095	1523498-0000		4	SPACER	
100	312105-0366		4	SCREW M6S ISO 4017 M6X12 A480	
140	315105-0165		8	WASHER BRB 8,4X16 RFR	
160	312105-0466		8	SCREW M6S ISO 4014 M8X75 A480	
TBA 1000B (See drawing on page: 5-42)					
010	1144892-0000		1	GUIDE RIGHT	
020	1144893-0000		1	GUIDE LEFT	
030	1260709-0000		1	GUIDE UPPER R	
040	1260710-0000		1	GUIDE UPPER L	
060	1144905-0000		1	SUPPORT	
090	2603663-0000		8	SPACER	
100	312105-0366		4	SCREW M6S ISO 4017 M6X12 A480	
140	315105-0165		8	WASHER BRB 8,4X16 RFR	
160	312105-0464		7	SCREW M6S ISO 4014 M8X65 A480	
TBA 1000S (See drawing on page: 5-40)					
010	1144892-0000		1	GUIDE RIGHT	
020	1144893-0000		1	GUIDE LEFT	
030	1260709-0000		1	GUIDE UPPER R	
040	1260710-0000		1	GUIDE UPPER L	
060	1144905-0000		1	SUPPORT	
070	1144555-0000		7	STUD SCREW	
080	1350721-0000		1	STUD SCREW	
100	312105-0366		4	SCREW M6S ISO 4017 M6X12 A480	
140	315105-0165		16	WASHER BRB 8,4X16 RFR	
150	312605-0318		16	HEXAGON NUT, M6M M8 A280	
TBA 1000SQ (See drawing on page: 5-42)					
010	1144892-0000		1	GUIDE RIGHT	
020	1144893-0000		1	GUIDE LEFT	
030	1549411-0000		1	PACKAGE GUIDE	
040	1549406-0000		1	PACKAGE GUIDE	
060	1498161-0000		1	SUPPORT	
090	1499071-0000		8	SPACER	
100	312105-0366		4	SCREW M6S ISO 4017 M6X12 A480	
140	315105-0165		8	WASHER BRB 8,4X16 RFR	
160	312105-0466		8	SCREW M6S ISO 4014 M8X75 A480	

Machine Type Group Description Used-In Group Number Page No

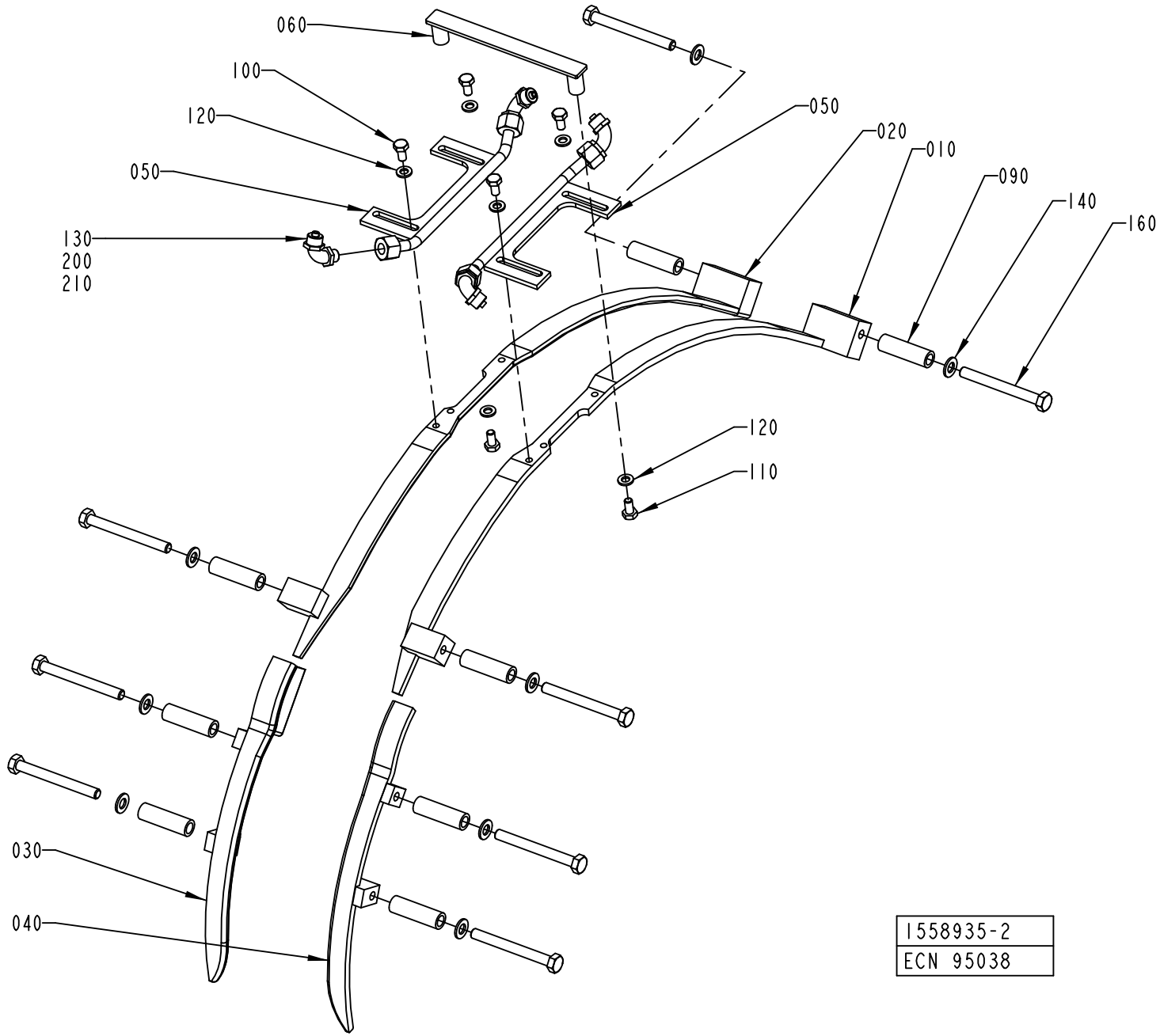
060
100
120
050
130
200
210
050
020
010
090
140
160
120
110
030
040
1558935-2
ECN 95038

ECM: 369001 - 20090101
Group number: 1558935-0100
Assembly Drawing: 1558935-2_1_AA

This list covers pages from 5-40 to 5-49

Pos	Part No	UN	Qty	Description	Page No
TBA 1500S (Cont'd) (See drawing on page: 5-46)					
010	1350424-0000		1	GUIDE RIGHT	
020	1350425-0000		1	GUIDE LEFT	
030	1334559-0000		1	GUIDE UPPER R	
040	1334560-0000		1	GUIDE UPPER L	
060	1285267-0000		1	SUPPORT	
090	1317088-0000		4	SPACER	
095	1348041-0000		2	SPACER	
098	1317088-0000		2	SPACER	
100	312105-0368		4	SCREW M6S ISO 4017 M6X16 A480	
140	315105-0165		8	WASHER BRB 8,4X16 RFR	
160	312105-0465		4	SCREW M6S ISO 4014 M8X70 A480	
165	312105-0465		2	SCREW M6S ISO 4014 M8X70 A480	
170	312105-0467		2	SCREW M6S ISO 4014 M8X80 A480	
180	1282705-0000		4	SUPPORT	
TPA 0250SQ (See drawing on page: 5-46)					
010	1144892-0000		1	GUIDE RIGHT	
020	1144893-0000		1	GUIDE LEFT	
030	1539900-0000		1	RIGHT UPPER GUIDE	
040	1549614-0000		1	LEFT UPPER GUIDE	
060	1346340-0000		1	BRACKET	
090	1539898-0000		4	SPACER	
095	1558526-0000		2	SPACER	
098	1558735-0000		2	SPACER	
100	312105-0366		4	SCREW M6S ISO 4017 M6X12 A480	
140	315105-0165		8	WASHER BRB 8,4X16 RFR	
160	312105-0469		4	SCREW M6S ISO 4014 M8X90 A480	
165	312105-0467		2	SCREW M6S ISO 4014 M8X80 A480	
170	312105-0469		2	SCREW M6S ISO 4014 M8X90 A480	
TPA 0330SQ (See drawing on page: 5-46)					
010	1144892-0000		1	GUIDE RIGHT	
020	1144893-0000		1	GUIDE LEFT	
030	1539900-0000		1	RIGHT UPPER GUIDE	
040	1549614-0000		1	LEFT UPPER GUIDE	
060	1346340-0000		1	BRACKET	
090	1558735-0000		4	SPACER	
095	1558736-0000		2	SPACER	
098	1558910-0000		2	SPACER	
100	312105-0366		4	SCREW M6S ISO 4017 M6X12 A480	
140	315105-0165		8	WASHER BRB 8,4X16 RFR	
160	312105-0469		4	SCREW M6S ISO 4014 M8X90 A480	
165	312105-0467		2	SCREW M6S ISO 4014 M8X80 A480	
170	312105-0469		2	SCREW M6S ISO 4014 M8X90 A480	
TPA 0500SQ (See drawing on page: 5-48)					
010	1144892-0000		1	GUIDE RIGHT	
020	1144893-0000		1	GUIDE LEFT	
030	2527530-0000		1	GUIDE UPPER R	
040	2527529-0000		1	GUIDE UPPER L	
060	1346340-0000		1	BRACKET	
070	1144555-0000		3	STUD SCREW	
080	1334523-0000		1	SUPPORT	
090	1558910-0000		4	SPACER	
100	312105-0366		4	SCREW M6S ISO 4017 M6X12 A480	
140	315105-0165		12	WASHER BRB 8,4X16 RFR	
150	312605-0318		8	HEXAGON NUT, M6M M8 A280	
160	312105-0467		4	SCREW M6S ISO 4014 M8X80 A480	
TPA 1000SQ (See drawing on page: 5-42)					
010	1350424-0000		1	GUIDE RIGHT	
020	1350425-0000		1	GUIDE LEFT	
030	1519358-0000		1	GUIDE	
040	1519359-0000		1	GUIDE	
060	1346340-0000		1	BRACKET	
090	1523926-0000		8	SPACER	
100	312105-0368		4	SCREW M6S ISO 4017 M6X16 A480	
140	315105-0165		8	WASHER BRB 8,4X16 RFR	
160	2541125-0000		8	SCREW	
180	1282705-0000		4	SUPPORT	
Common Parts					
050	1350423-0000		2	FOLDING BAR	
110	312105-0366		2	SCREW M6S ISO 4017 M6X12 A480	
120	315105-0153		6	WASHER BRB 6,4X12 RFR	
130	342931-0121		4	ELBOW 90 COUPL.,EXT.THREAD 8/6-G1/8"	
200	90166-0118	MM	1500	TUBE 8 MM PA BLACK	
210	352113-0102		10	CABLE TIE, BLACK 188X4,8 MM	

Machine Type | Group Description | Used-In | Group Number | Page No

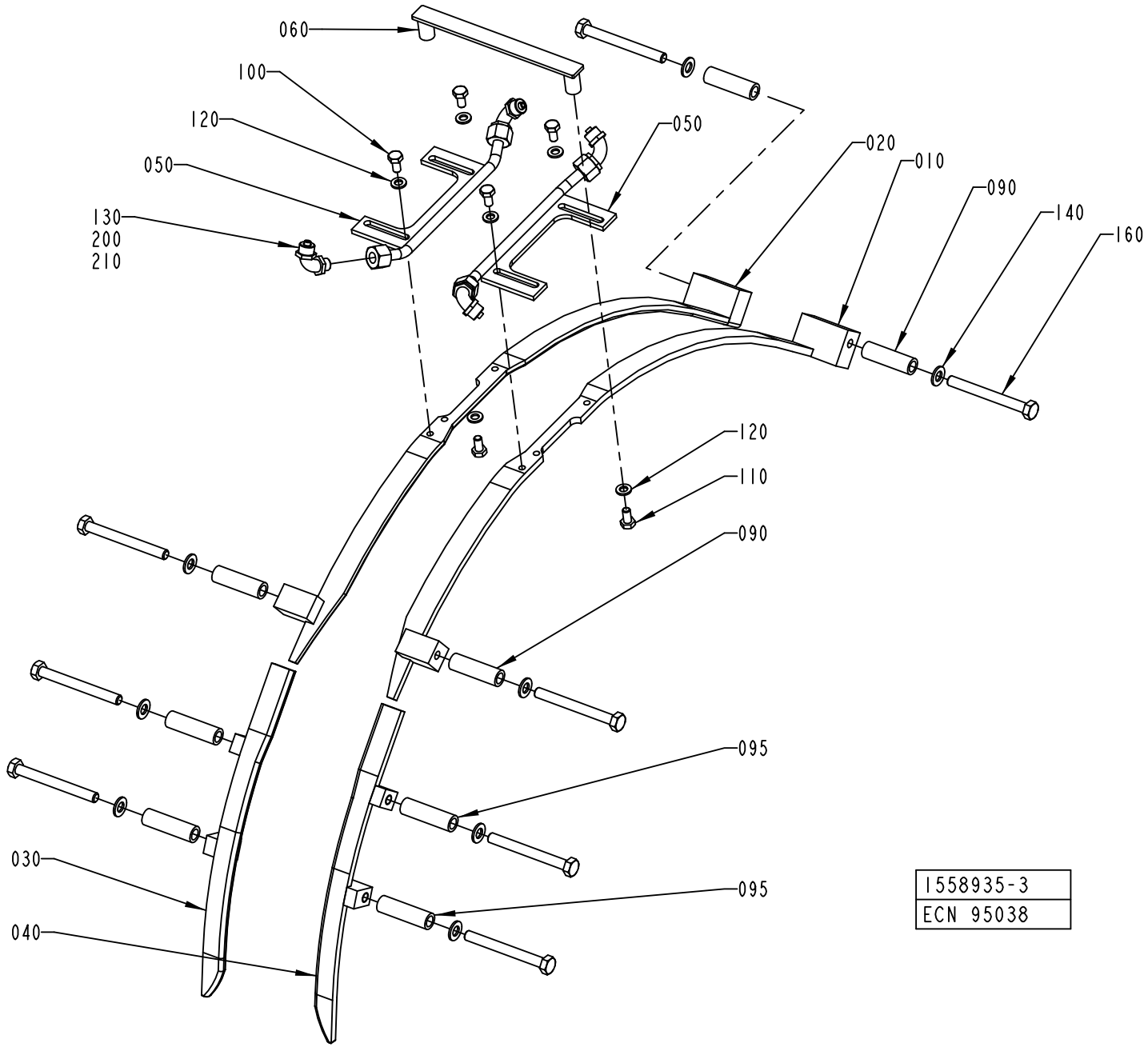
060
100
120
050
130
200
210
050
020
010
090
140
160
120
110
090
095
095
030
040
1558935-3
ECN 95038

Pos	Part No	UN	Qty	Description	Page No
SEE PREVIOUS LISTS PAGES: 5-41, 5-43.					

Pos	Part No	UN	Qty	Description	Page No

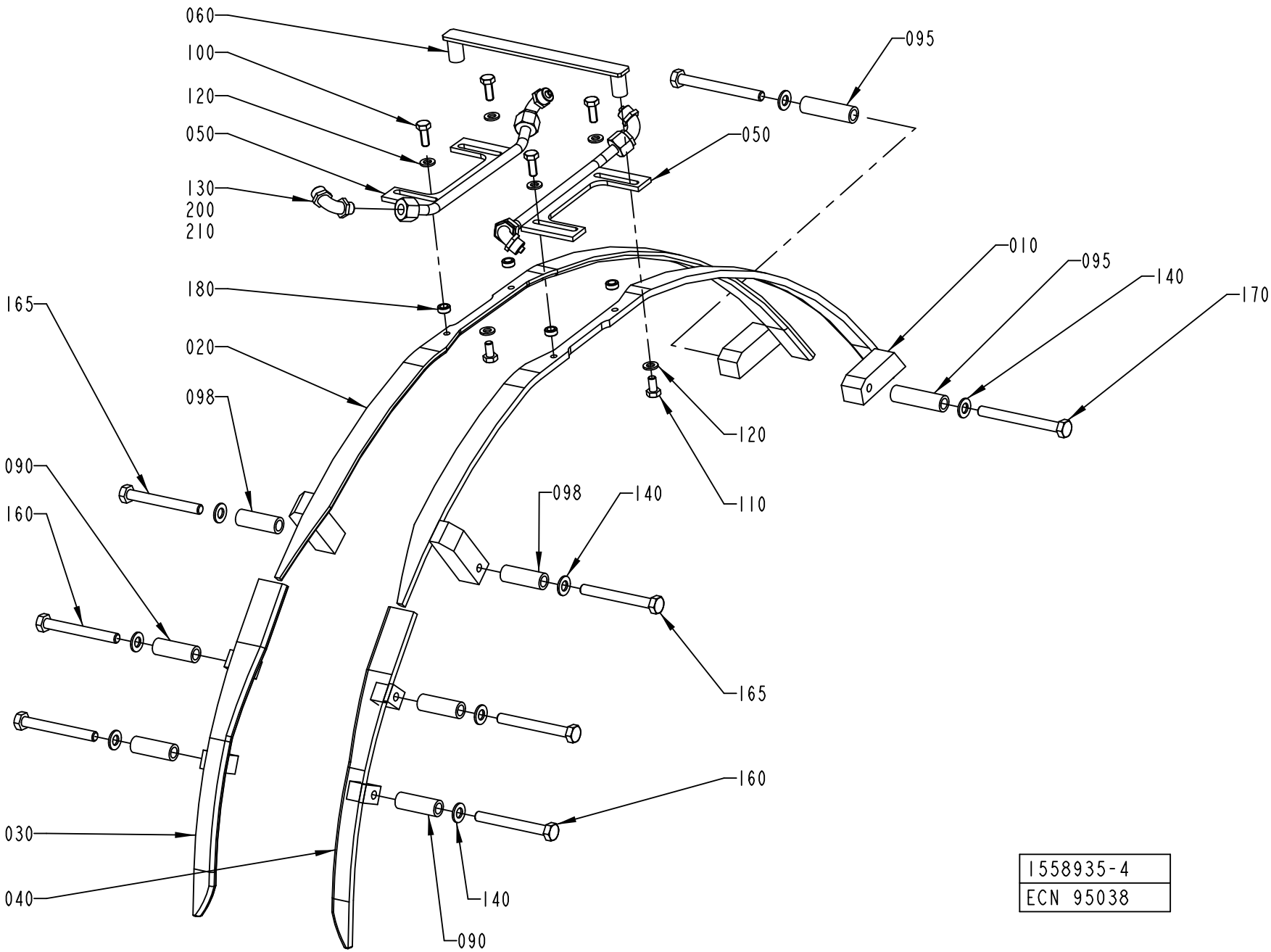
060
100
120
050
130
200
210
180
165
020
098
090
160
030
040
095
050
010
095
140
170
120
110
098
140
165
160
140
090
1558935-4
ECN 95038

Pos	Part No	UN	Qty	Description	Page No
SEE PREVIOUS LISTS PAGES: 5-41, 5-43.					

Pos	Part No	UN	Qty	Description	Page No

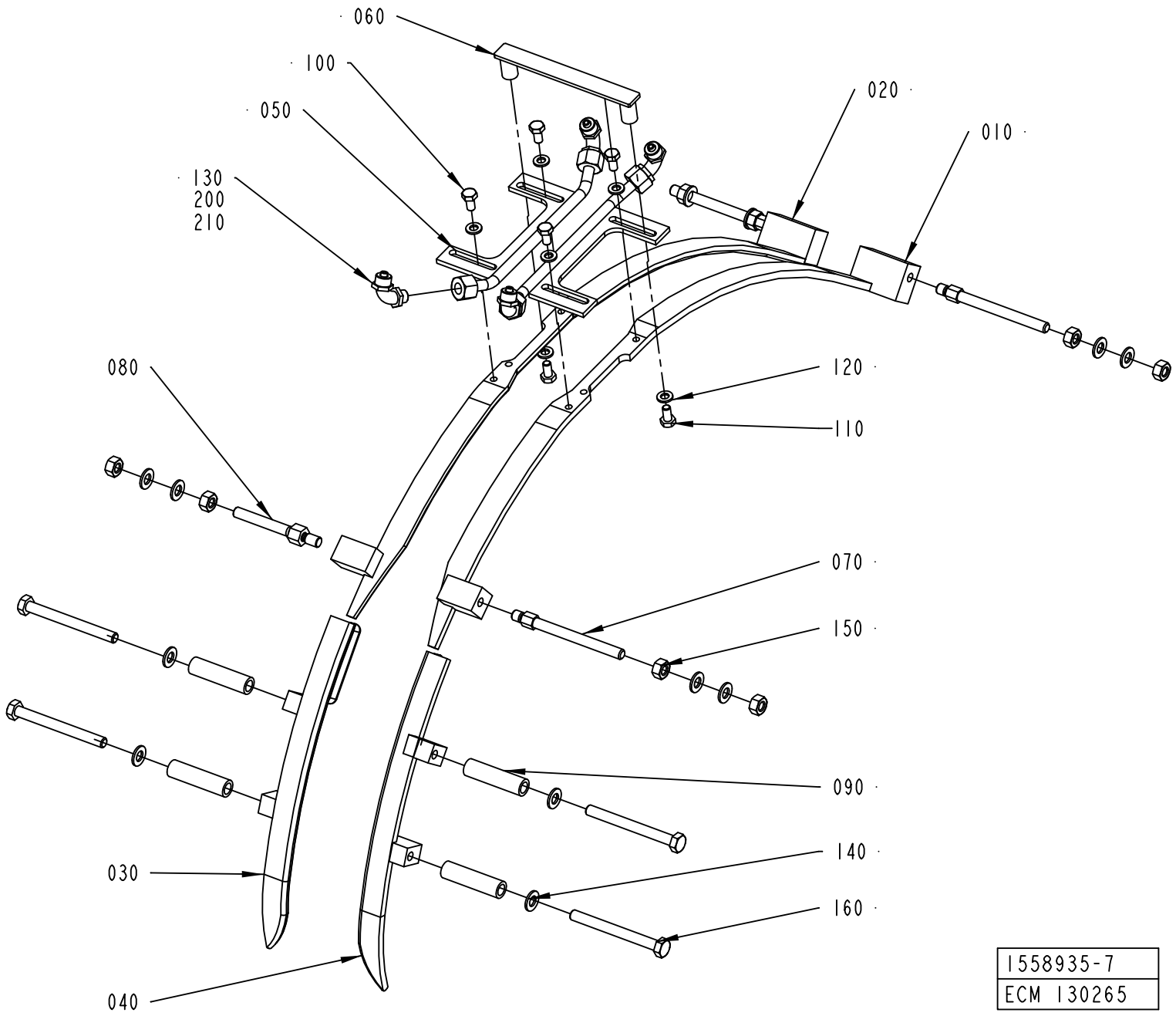
060
100
050
130
200
210
020
010
080
120
110
070
150
090
140
160
030
040
1558935-7
ECM 130265

ECM: 369001 - 20090101
Group number: 1558935-0100
Assembly Drawing: 1558935-7_1_AA

This list covers pages from 5-40 to 5-49

Pos	Part No	UN	Qty	Description	Page No
SEE PREVIOUS LISTS PAGES: 5-41, 5-43.					

Pos	Part No	UN	Qty	Description	Page No

Machine Type	Group Description	Used-In	Group Number	Page No

FLAP GUIDE

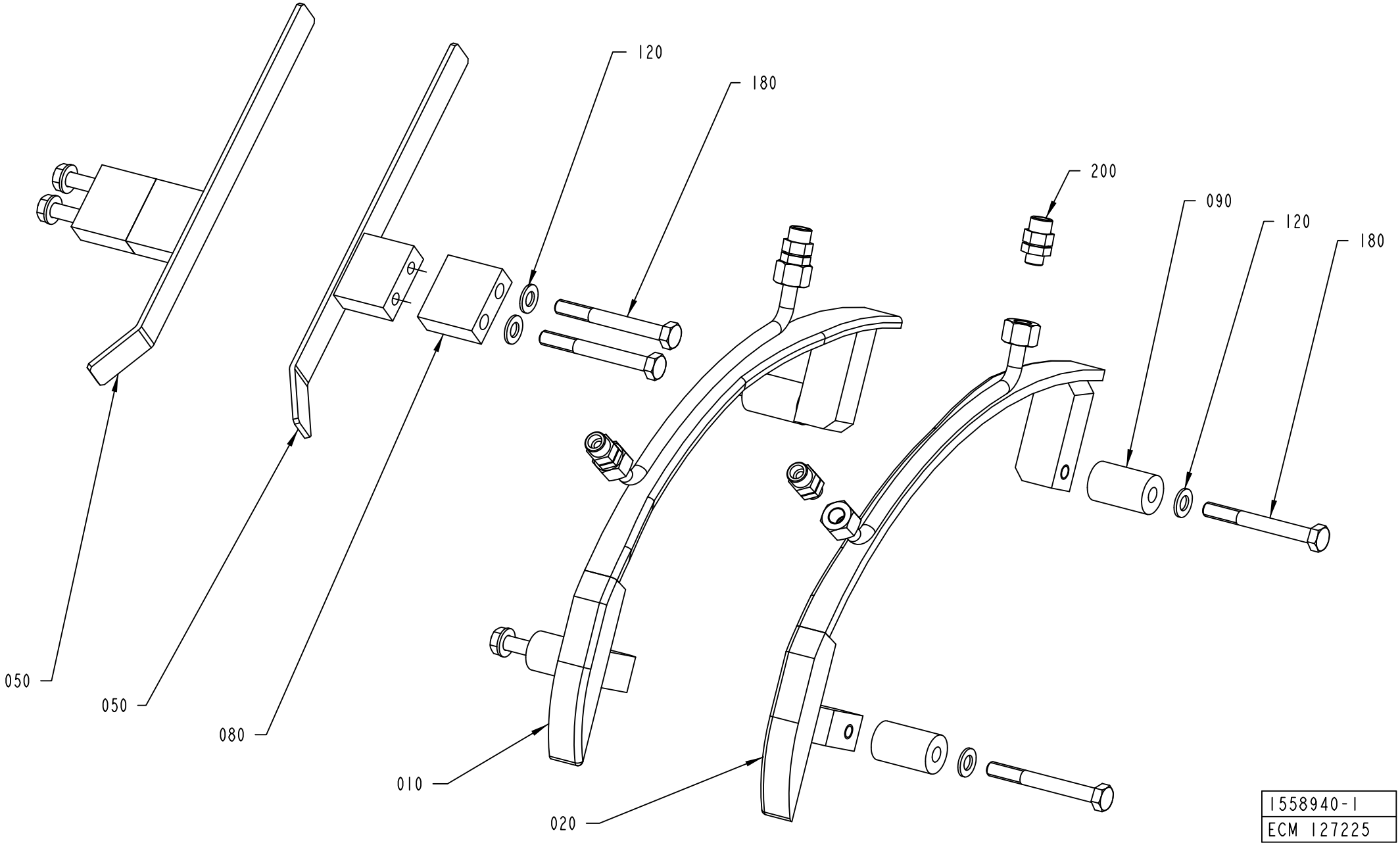

1558940-1
ECM 127225

ECM: 369002 - 20090101
Group number: 1558940-0200
Assembly Drawing: 1558940-1_1_AB

This list covers pages from 5-50 to 5-63

Pos	Part No	UN	Qty	Description	Page No
TPA 1000SQ, TPA 1000SQ SMILE (See drawing on page: 5-58)					
010	2553347-0000		1	FOLDING BAR	
020	2553348-0000		1	FOLDING BAR	
030	1317043-0000		2	SUPPORT	
040	1499150-0000		1	RAIL	
050	1499151-0000		1	RAIL	
060	1523927-0000		2	SPACER SCREW	
080	1519355-0000		4	SPACER	
090	1523926-0000		2	SPACER	
100	312109-0457		4	SCREW M6S ISO 4017 M8X35 A480	
110	312105-0462		4	SCREW M6S ISO 4014 M8X55 A480	
120	315105-0165		20	WASHER BRB 8,4X16 RFR	
130	312605-0318		2	HEXAGON NUT, M6M M8 A280	
160	312155-0459		2	SCREW DIN 7991 MF6S M8X40 A4 70	
170	312105-0453		2	SCREW M6S ISO 4017 M8X25 A480	
180	312105-0467		2	SCREW M6S ISO 4014 M8X80 A480	
200	342921-0121		4	STRAIGHT CPLNG,EXT.THREADED 8/6-G1/8INCH	
210	1538890-0000		1	RAIL	
220	1538891-0000		1	RAIL	
230	1519355-0000		4	SPACER	
240	2644368-0000		2	BRACKET	
250	312105-0462		4	SCREW M6S ISO 4014 M8X55 A480	
260	312105-0455		2	SCREW M6S ISO 4017 M8X30 A480	
TBA 0200B (See drawing on page: 5-52)					
010	1346149-0000		1	FOLDING BAR	
020	1346150-0000		1	FOLDING BAR	
040	1346343-0000		1	RAIL	
050	1346344-0000		1	RAIL	
060	1144555-0000		7	STUD SCREW	
065	1350721-0000		1	STUD SCREW	
070	1144990-0000		2	FOLDING BAR	
120	315105-0165		16	WASHER BRB 8,4X16 RFR	
130	312605-0318		16	HEXAGON NUT, M6M M8 A280	
140	315105-0153		4	WASHER BRB 6,4X12 RFR	
150	312105-0364		4	SCREW M6S ISO 4017 M6X10 A480	
200	342931-0121		4	ELBOW 90 COUPL.,EXT.THREAD 8/6-G1/8"	
TBA 0200S (See drawing on page: 5-52)					
010	1282294-0000		1	FOLDING BAR	
020	1282295-0000		1	FOLDING BAR	
040	1346343-0000		1	RAIL	
050	1346344-0000		1	RAIL	
060	1144555-0000		7	STUD SCREW	
065	1350721-0000		1	STUD SCREW	
070	1144990-0000		2	FOLDING BAR	
120	315105-0165		16	WASHER BRB 8,4X16 RFR	
130	312605-0318		16	HEXAGON NUT, M6M M8 A280	
140	315105-0153		4	WASHER BRB 6,4X12 RFR	
150	312105-0364		4	SCREW M6S ISO 4017 M6X10 A480	
200	342931-0121		4	ELBOW 90 COUPL.,EXT.THREAD 8/6-G1/8"	
TBA 0250B (See drawing on page: 5-52)					
010	1317217-0000		1	FOLDING BAR	
020	1317216-0000		1	FOLDING BAR	
040	1346343-0000		1	RAIL	
050	1346344-0000		1	RAIL	
060	1144555-0000		7	STUD SCREW	
065	1350721-0000		1	STUD SCREW	
070	1144990-0000		2	FOLDING BAR	
120	315105-0165		16	WASHER BRB 8,4X16 RFR	
130	312605-0318		16	HEXAGON NUT, M6M M8 A280	
140	315105-0153		4	WASHER BRB 6,4X12 RFR	
150	312105-0364		4	SCREW M6S ISO 4017 M6X10 A480	
200	342931-0121		4	ELBOW 90 COUPL.,EXT.THREAD 8/6-G1/8"	
TBA 0500B (See drawing on page: 5-56)					
010	1539881-0000		1	FOLDING BAR	
020	1539882-0000		1	FOLDING BAR	
040	1346343-0000		1	RAIL	
050	1346344-0000		1	RAIL	
060	1558713-0000		2	SPACER SCREW	
080	1539873-0000		4	SPACER	
090	1539871-0000		2	SPACER	
110	312109-0461		4	SCREW M6S ISO 4017 M8X50 A480	
120	315105-0165		8	WASHER BRB 8,4X16 RFR	
130	312605-0318		2	HEXAGON NUT, M6M M8 A280	
180	312105-0464		2	SCREW M6S ISO 4014 M8X65 A480	
200	342921-0121		4	STRAIGHT CPLNG,EXT.THREADED 8/6-G1/8INCH	
TBA 0500S (See drawing on page: 5-54)					
010	1519770-0000		1	FOLDING BAR	
020	1519769-0000		1	FOLDING BAR	
030	1317043-0000		2	SUPPORT	
040	1499150-0000		1	RAIL	
050	1499151-0000		1	RAIL	
060	1499402-0000		2	SPACER	
080	1499072-0000		4	SPACER	
090	1499071-0000		2	SPACER	

Machine Type | Group Description | Used-In | Group Number | Page No

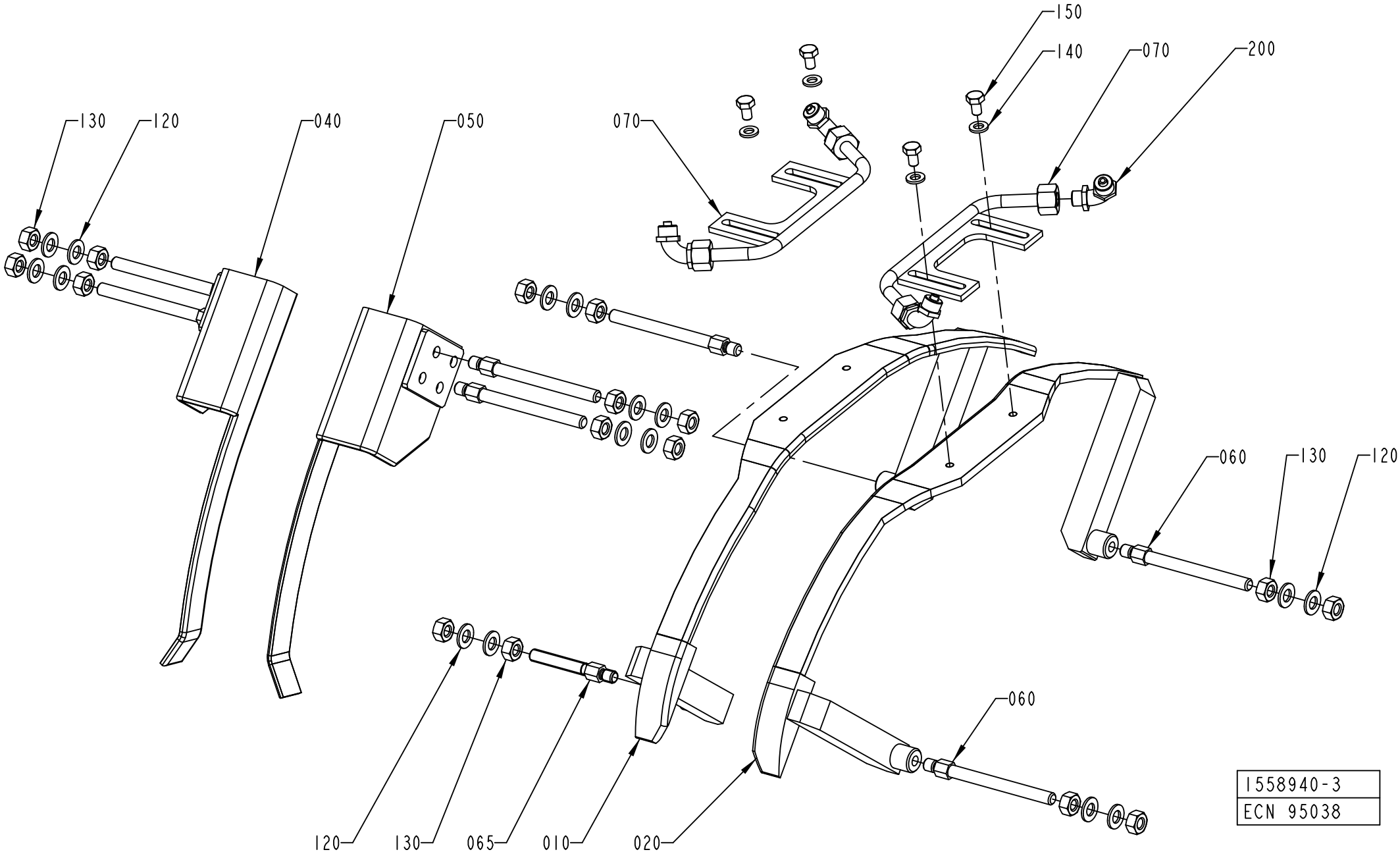
150
140
070
200
130
120
040
050
070
060
130
120
120
130
065
010
020
060
1558940-3
ECN 95038

ECM: 369002 - 20090101
Group number: 1558940-0200
Assembly Drawing: 1558940-3_1_AA

This list covers pages from 5-50 to 5-63

Pos	Part No	UN	Qty	Description	Page No
TBA 0500S (Cont'd) (See drawing on page: 5-54)					
100	312109-0457		4	SCREW M6S ISO 4017 M8X35 A480	
110	312105-0463		4	SCREW M6S ISO 4014 M8X60 A480	
120	315105-0165		12	WASHER BRB 8,4X16 RFR	
130	312605-0318		2	HEXAGON NUT, M6M M8 A280	
180	312105-0466		2	SCREW M6S ISO 4014 M8X75 A480	
200	342921-0121		4	STRAIGHT CPLNG,EXT.THREADED 8/6-G1/8INCH	
TBA 1000B NOMOLDEDCAP (See drawing on pages: 5-50, 5-62)					
010	2639127-0000		1	FOLDING BAR	
020	2639128-0000		1	FOLDING BAR	
050	1144719-0000		2	RAIL	
080	2639393-0000		2	SPACER	
090	2603663-0000		3	SPACER	
120	315105-0165		8	WASHER BRB 8,4X16 RFR	
130	312605-0318		1	HEXAGON NUT, M6M M8 A280	
180	312105-0465		7	SCREW M6S ISO 4014 M8X70 A480	
190	1558713-0000		1	SPACER SCREW	
200	342921-0121		4	STRAIGHT CPLNG,EXT.THREADED 8/6-G1/8INCH	
TBA 1000B STDA7 (See drawing on page: 5-54)					
010	2609370-0000		1	FOLDING BAR	
020	2609369-0000		1	FOLDING BAR	
030	1317043-0000		2	SUPPORT	
040	1499150-0000		1	RAIL	
050	1499151-0000		1	RAIL	
060	2509936-0000		2	SPACER SCREW	
080	2609371-0000		4	SPACER	
090	2603663-0000		2	SPACER	
100	312109-0457		4	SCREW M6S ISO 4017 M8X35 A480	
110	312105-0462		4	SCREW M6S ISO 4014 M8X55 A480	
120	315105-0165		14	WASHER BRB 8,4X16 RFR	
130	312605-0318		2	HEXAGON NUT, M6M M8 A280	
160	312155-0459		2	SCREW DIN 7991 MF6S M8X40 A4 70	
170	312105-0453		2	SCREW M6S ISO 4017 M8X25 A480	
200	342931-0121		4	ELBOW 90 COUPL.,EXT.THREAD 8/6-G1/8"	
250	312105-0462		4	SCREW M6S ISO 4014 M8X55 A480	
TBA 1000S NOMOLDEDCAP (See drawing on page: 5-60)					
010	1144897-0000		1	FOLDING BAR	
020	1144898-0000		1	FOLDING BAR	
050	1144719-0000		2	RAIL	
060	1144555-0000		8	STUD SCREW	
120	315105-0165		16	WASHER BRB 8,4X16 RFR	
130	312605-0318		16	HEXAGON NUT, M6M M8 A280	
200	342921-0121		4	STRAIGHT CPLNG,EXT.THREADED 8/6-G1/8INCH	
TBA 1000S STDA7, TBA 1000S LIGHTCAP (See drawing on page: 5-54)					
010	1498827-0000		1	FOLDING BAR	
020	1498828-0000		1	FOLDING BAR	
030	1317043-0000		2	SUPPORT	
040	1317042-0000		1	RAIL	
050	1317047-0000		1	RAIL	
060	2509936-0000		2	SPACER SCREW	
080	2509937-0000		4	SPACER	
090	2509935-0000		2	SPACER	
100	312109-0457		4	SCREW M6S ISO 4017 M8X35 A480	
110	312105-0461		4	SCREW M6S ISO 4014 M8X50 A480	
120	315105-0165		14	WASHER BRB 8,4X16 RFR	
130	312605-0318		2	HEXAGON NUT, M6M M8 A280	
160	312155-0459		2	SCREW DIN 7991 MF6S M8X40 A4 70	
170	312105-0451		2	SCREW M6S ISO 4017 M8X20 A480	
180	312105-0464		2	SCREW M6S ISO 4014 M8X65 A480	
200	342931-0121		4	ELBOW 90 COUPL.,EXT.THREAD 8/6-G1/8"	
TBA 1000SQ (See drawing on page: 5-54)					
010	1498827-0000		1	FOLDING BAR	
020	1498828-0000		1	FOLDING BAR	
030	1317043-0000		2	SUPPORT	
040	1317042-0000		1	RAIL	
050	1317047-0000		1	RAIL	
060	1499094-0000		2	SPACER SCREW	
080	1499072-0000		4	SPACER	
090	1499071-0000		2	SPACER	
100	312109-0457		4	SCREW M6S ISO 4017 M8X35 A480	
110	312105-0463		4	SCREW M6S ISO 4014 M8X60 A480	
120	315105-0165		14	WASHER BRB 8,4X16 RFR	
130	312605-0318		2	HEXAGON NUT, M6M M8 A280	
160	312155-0459		2	SCREW DIN 7991 MF6S M8X40 A4 70	
170	312105-0451		2	SCREW M6S ISO 4017 M8X20 A480	
180	312105-0466		2	SCREW M6S ISO 4014 M8X75 A480	
200	342931-0121		4	ELBOW 90 COUPL.,EXT.THREAD 8/6-G1/8"	
TBA 1500S (See drawing on page: 5-54)					
010	1317653-0000		1	FOLDING BAR	
020	1317652-0000		1	FOLDING BAR	
030	1317043-0000		2	SUPPORT	
040	1317042-0000		1	RAIL	
050	1317047-0000		1	RAIL	
060	1348042-0000		2	SPACER	

Machine Type | Group Description | Used-In | Group Number | Page No

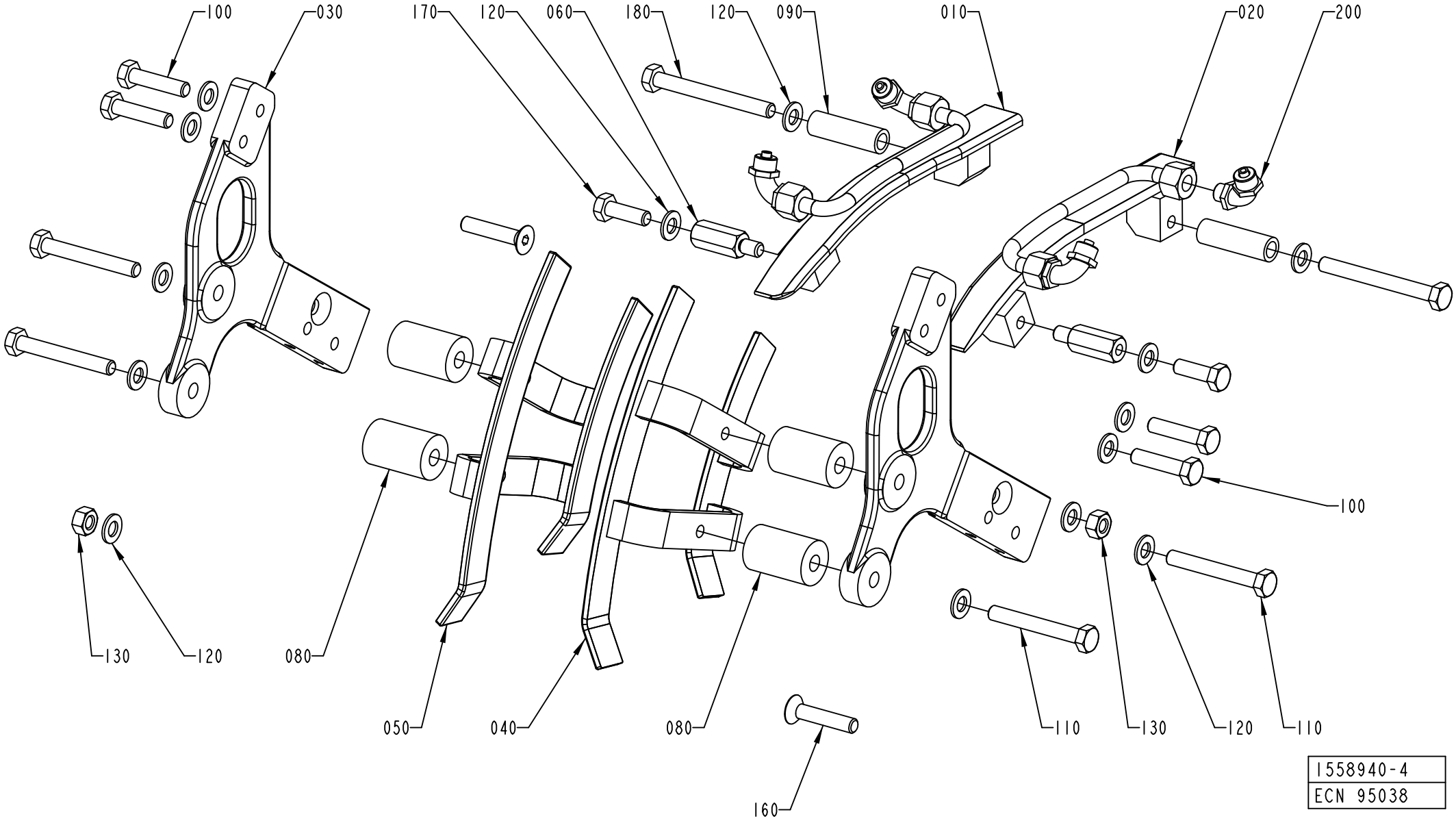
100
030
170
120
060
180
120
090
010
020
200
100
130
120
080
050
040
080
160
110
130
120
110
1558940-4
ECN 95038

ECM: 369002 - 20090101
Group number: 1558940-0200
Assembly Drawing: 1558940-4_1_AA

This list covers pages from 5-50 to 5-63

Pos	Part No	UN	Qty	Description	Page No
TBA 1500S (Cont'd) (See drawing on page: 5-54)					
080	1334718-0000		4	SPACER	
090	1317088-0000		2	SPACER	
100	312109-0457		4	SCREW M6S ISO 4017 M8X35 A480	
110	312109-0461		4	SCREW M6S ISO 4017 M8X50 A480	
120	315105-0165		12	WASHER BRB 8,4X16 RFR	
130	312605-0318		2	HEXAGON NUT, M6M M8 A280	
180	312105-0465		2	SCREW M6S ISO 4014 M8X70 A480	
200	342931-0121		4	ELBOW 90 COUPL.,EXT.THREAD 8/6-G1/8"	
TPA 0250SQ (See drawing on page: 5-54)					
010	1532275-0000		1	FOLDING BAR	
020	1532276-0000		1	FOLDING BAR	
030	1317043-0000		2	SUPPORT	
040	1532281-0000		1	RAIL	
050	1532280-0000		1	RAIL	
060	1558889-0000		2	SPACER SCREW	
080	1558527-0000		4	SPACER	
090	1539898-0000		2	SPACER	
100	312109-0457		4	SCREW M6S ISO 4017 M8X35 A480	
110	312105-0464		4	SCREW M6S ISO 4014 M8X65 A480	
120	315105-0165		14	WASHER BRB 8,4X16 RFR	
130	312605-0318		2	HEXAGON NUT, M6M M8 A280	
160	312155-0459		2	SCREW DIN 7991 MF6S M8X40 A4 70	
170	312105-0453		2	SCREW M6S ISO 4017 M8X25 A480	
180	312105-0469		2	SCREW M6S ISO 4014 M8X90 A480	
200	342921-0121		4	STRAIGHT CPLNG,EXT.THREADED 8/6-G1/8INCH	
TPA 0330SQ (See drawing on page: 5-54)					
010	1532275-0000		1	FOLDING BAR	
020	1532276-0000		1	FOLDING BAR	
030	1317043-0000		2	SUPPORT	
040	1532281-0000		1	RAIL	
050	1532280-0000		1	RAIL	
060	1499094-0000		2	SPACER SCREW	
080	1499072-0000		4	SPACER	
090	1558735-0000		2	SPACER	
100	312109-0457		4	SCREW M6S ISO 4017 M8X35 A480	
110	312105-0463		4	SCREW M6S ISO 4014 M8X60 A480	
120	315105-0165		14	WASHER BRB 8,4X16 RFR	
130	312605-0318		2	HEXAGON NUT, M6M M8 A280	
160	312155-0459		2	SCREW DIN 7991 MF6S M8X40 A4 70	
170	312105-0453		2	SCREW M6S ISO 4017 M8X25 A480	
180	312105-0469		2	SCREW M6S ISO 4014 M8X90 A480	
200	342921-0121		4	STRAIGHT CPLNG,EXT.THREADED 8/6-G1/8INCH	
TPA 0500SQ SMILE (See drawing on page: 5-54)					
010	2529910-0000		1	FOLDING BAR	
020	2529909-0000		1	FOLDING BAR	
030	1317043-0000		2	SUPPORT	
040	1499150-0000		1	RAIL	
050	1499151-0000		1	RAIL	
060	2530201-0000		2	SPACER SCREW	
080	1549508-0000		4	SPACER SCREW	
090	1558910-0000		2	SPACER	
100	312109-0457		4	SCREW M6S ISO 4017 M8X35 A480	
110	312105-0451		4	SCREW M6S ISO 4017 M8X20 A480	
120	315105-0165		14	WASHER BRB 8,4X16 RFR	
130	312605-0318		2	HEXAGON NUT, M6M M8 A280	
160	312155-0459		2	SCREW DIN 7991 MF6S M8X40 A4 70	
170	312105-0453		2	SCREW M6S ISO 4017 M8X25 A480	
180	312105-0464		2	SCREW M6S ISO 4014 M8X65 A480	
180	312105-0467		2	SCREW M6S ISO 4014 M8X80 A480	
200	342921-0121		4	STRAIGHT CPLNG,EXT.THREADED 8/6-G1/8INCH	

Machine Type | Group Description | Used-In | Group Number | Page No

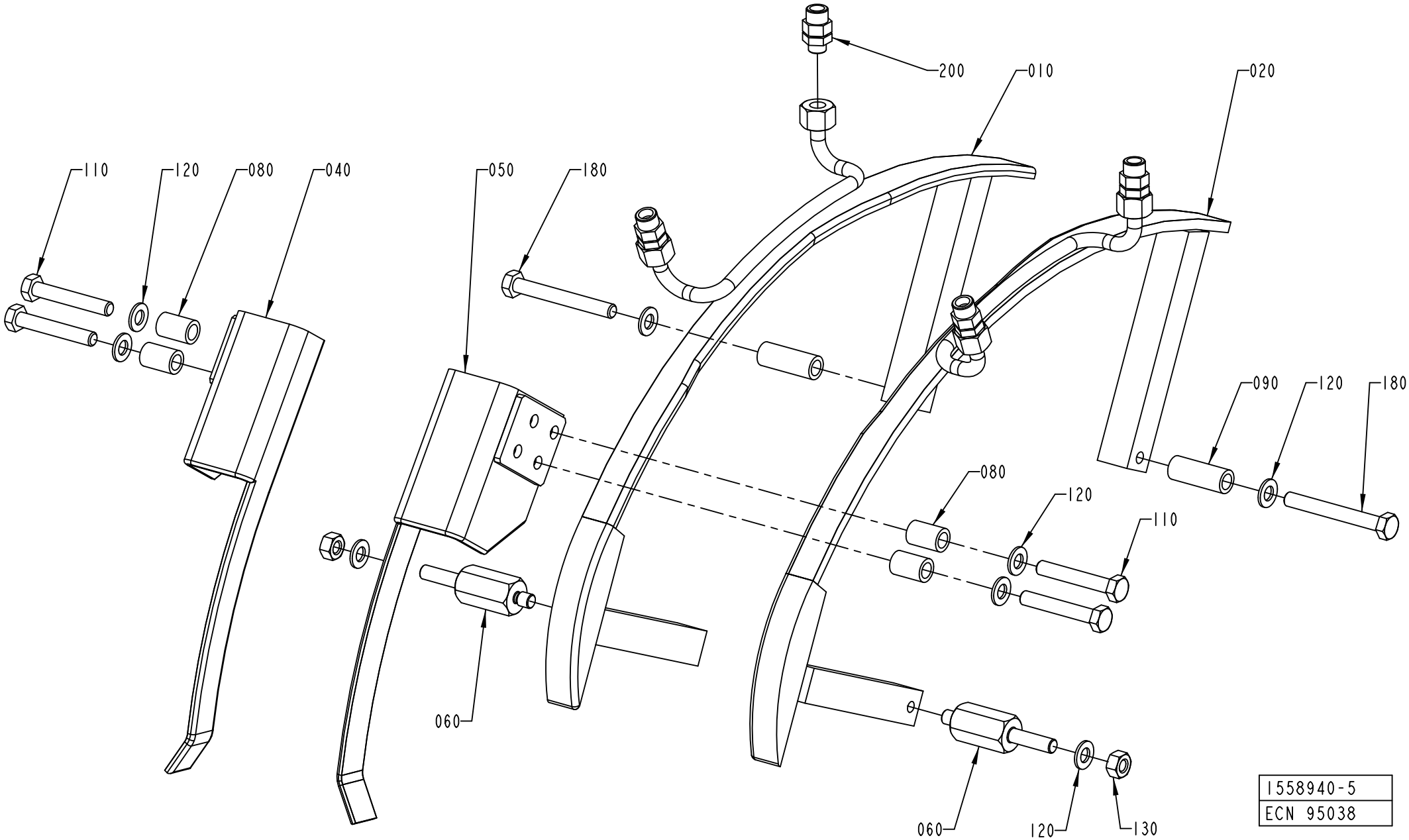
200
010
020
110
120
080
040
050
180
090
120
180
080
120
110
060
060
120
130
1558940-5
ECN 95038

Pos	Part No	UN	Qty	Description	Page No
SEE PREVIOUS LISTS PAGES: 5-51, 5-53, 5-55.					

Pos	Part No	UN	Qty	Description	Page No

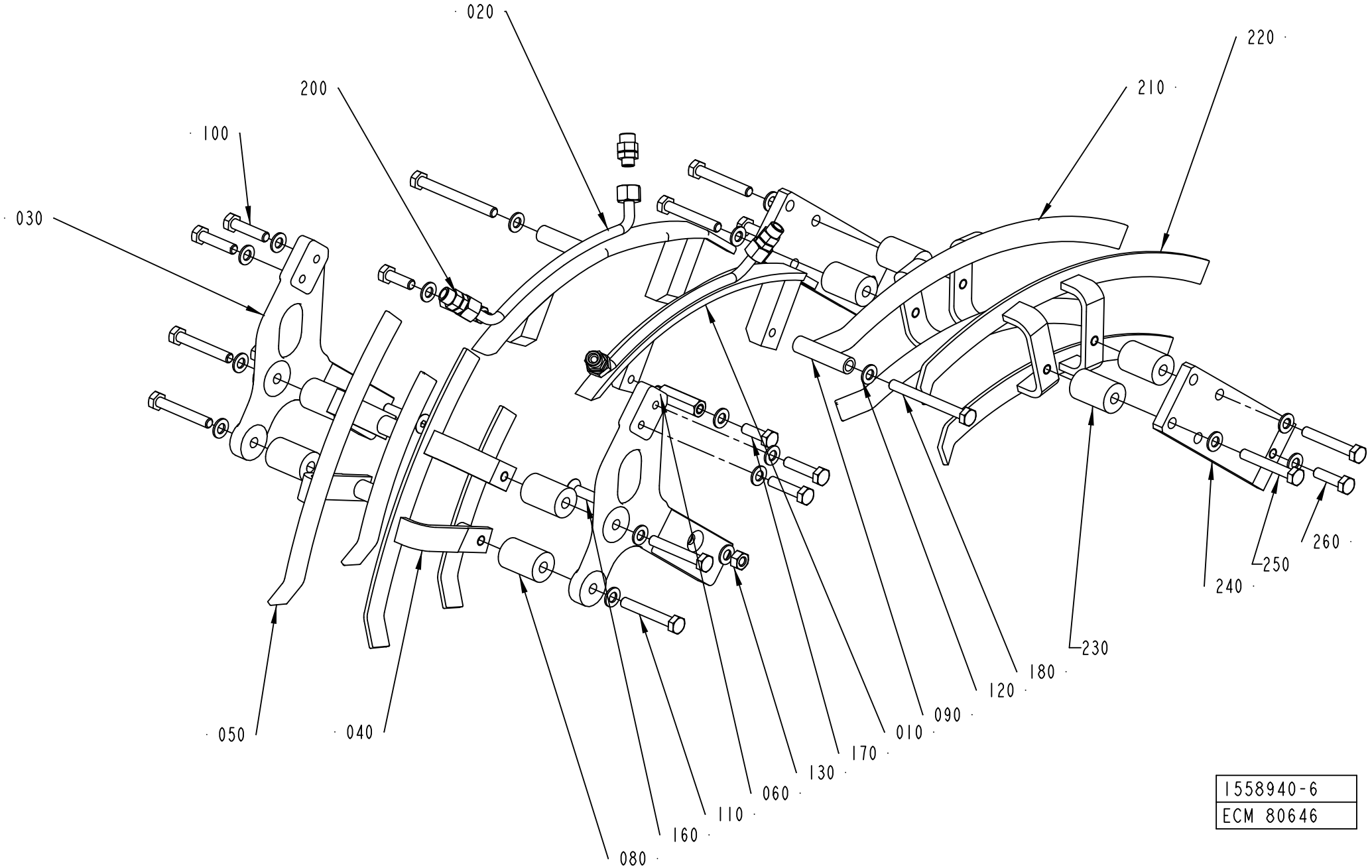

1558940-6
ECM 80646

Pos	Part No	UN	Qty	Description	Page No
SEE PREVIOUS LISTS PAGES: 5-51, 5-53, 5-55.					

Pos	Part No	UN	Qty	Description	Page No

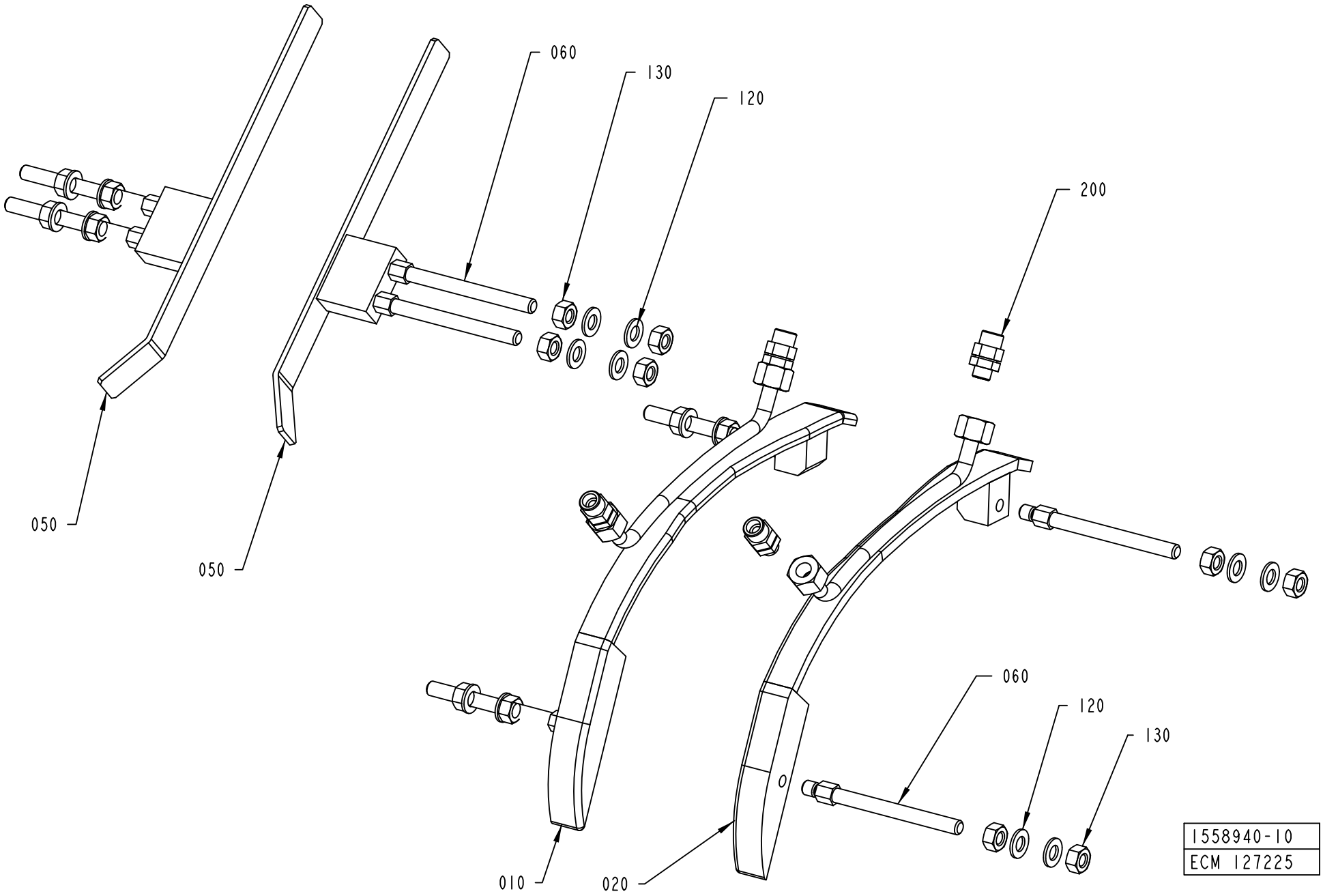
060
130
120
200
050
050
060
120
130
010
020
1558940-10
ECM 127225

ECM: 369002 - 20090101
Group number: 1558940-0200
Assembly Drawing: 1558940-10_1_AA

This list covers pages from 5-50 to 5-63

Pos	Part No	UN	Qty	Description	Page No
SEE PREVIOUS LISTS PAGES: 5-51, 5-53, 5-55.					

Pos	Part No	UN	Qty	Description	Page No

Machine Type	Group Description	Used-In	Group Number	Page No

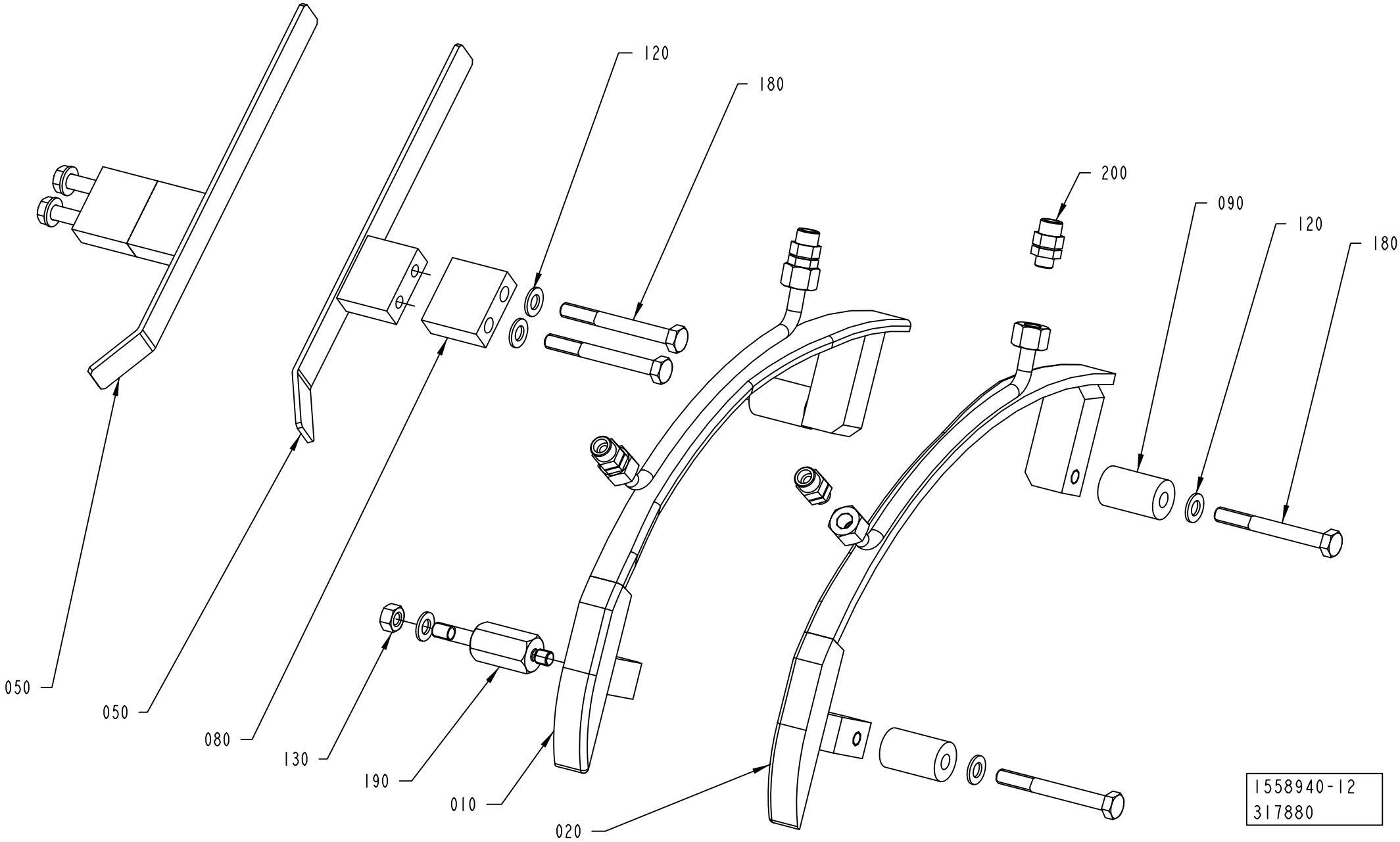
120
180
200
090
120
180
050
050
080
130
190
010
020
1558940-12
317880

Pos	Part No	UN	Qty	Description	Page No
SEE PREVIOUS LISTS PAGES: 5-51, 5-53, 5-55.					

Pos	Part No	UN	Qty	Description	Page No

DROP CHUTE VARIANT

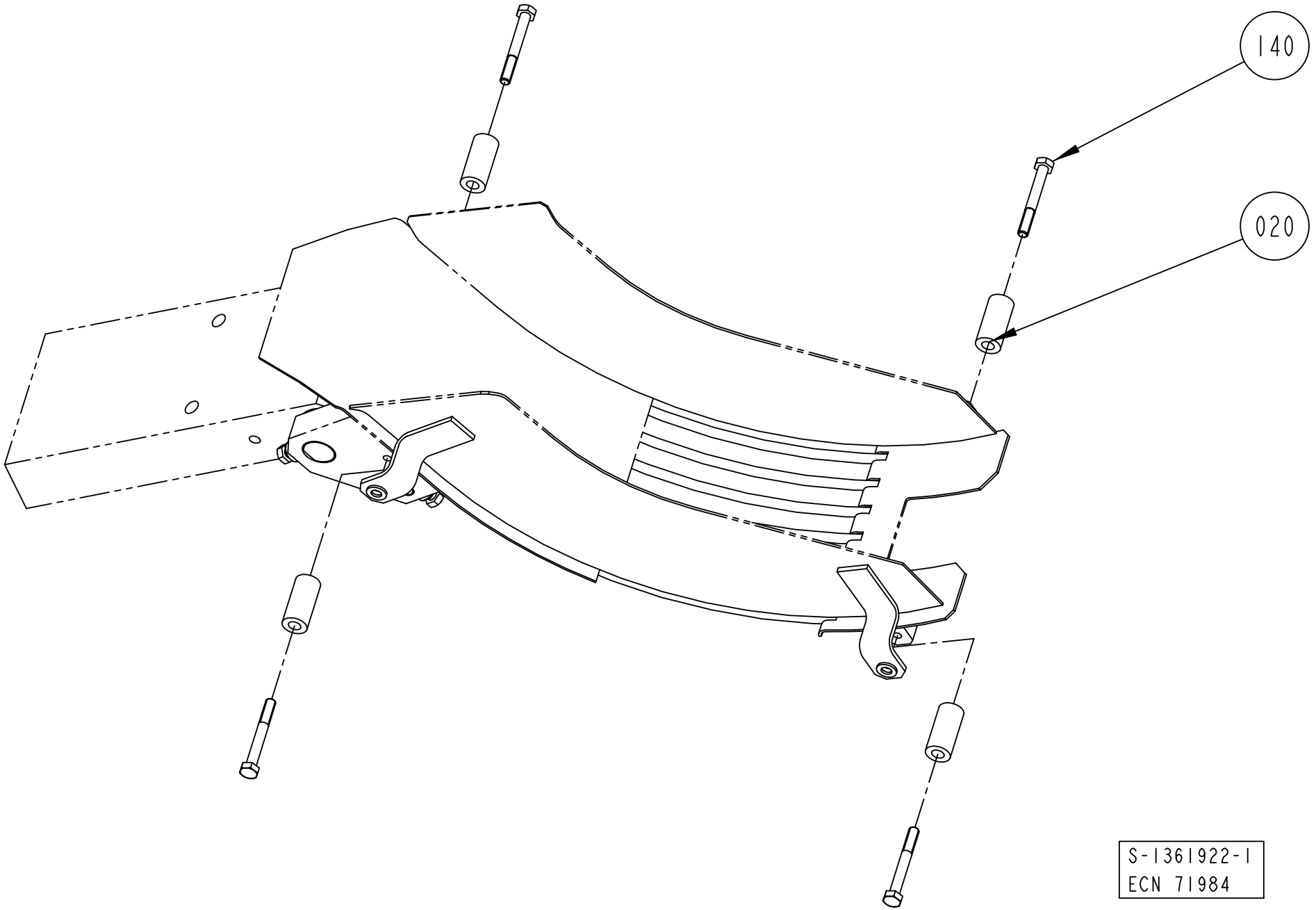

ECM: 368995 - 20090101
Group number: 1361922-0200
Assembly Drawing: 1361922-1_1_AC

Pos	Part No	UN	Qty	Description	Page No
TBA 0200B, TBA 0250B, TBA 0330S					
020	1317218-0000		4	SPACER	
140	312105-0374		4	SCREW M6S ISO 4014 M6X30 A480	
TBA 0200S					
020	315115-0153		4	WASHER PLAIN, TBRB 6,4/12 H=3	
140	312105-0370		4	SCREW M6S ISO 4017 M6X20 A480	
TBA 0250S					
020	2522202-0000		4	SPACER	
140	312105-0374		4	SCREW M6S ISO 4014 M6X30 A480	
TBA 0500B, TBA 1000B					
020	1260714-0000		4	SPACER	
140	312105-0382		4	SCREW M6S ISO 4014 M6X60 A480	
TBA 0500S					
020	1499140-0000		4	SPACER	
140	312105-0379		4	SCREW M6S ISO 4014 M6X45 A480	
TBA 1000S					
020	1279670-0000		4	SPACER	
140	312105-0380		4	SCREW M6S ISO 4014 M6X50 A480	
TBA 1000SQ					
020	1487929-0000		4	SPACER	
140	312105-0379		4	SCREW M6S ISO 4014 M6X45 A480	
TBA 1500S					
140	312105-0366		4	SCREW M6S ISO 4017 M6X12 A480	
TPA 0250SQ					
020	315115-0153		4	WASHER PLAIN, TBRB 6,4/12 H=3	
140	312105-0370		4	SCREW M6S ISO 4017 M6X20 A480	
TPA 0330SQ					
020	1532254-0000		4	SPACER	
140	312105-0374		4	SCREW M6S ISO 4014 M6X30 A480	
TPA 0500SQ					
020	1549512-0000		4	SPACER	
140	312105-0374		4	SCREW M6S ISO 4014 M6X30 A480	

Pos	Part No	UN	Qty	Description	Page No

INFEED CONVEYOR VARIANT

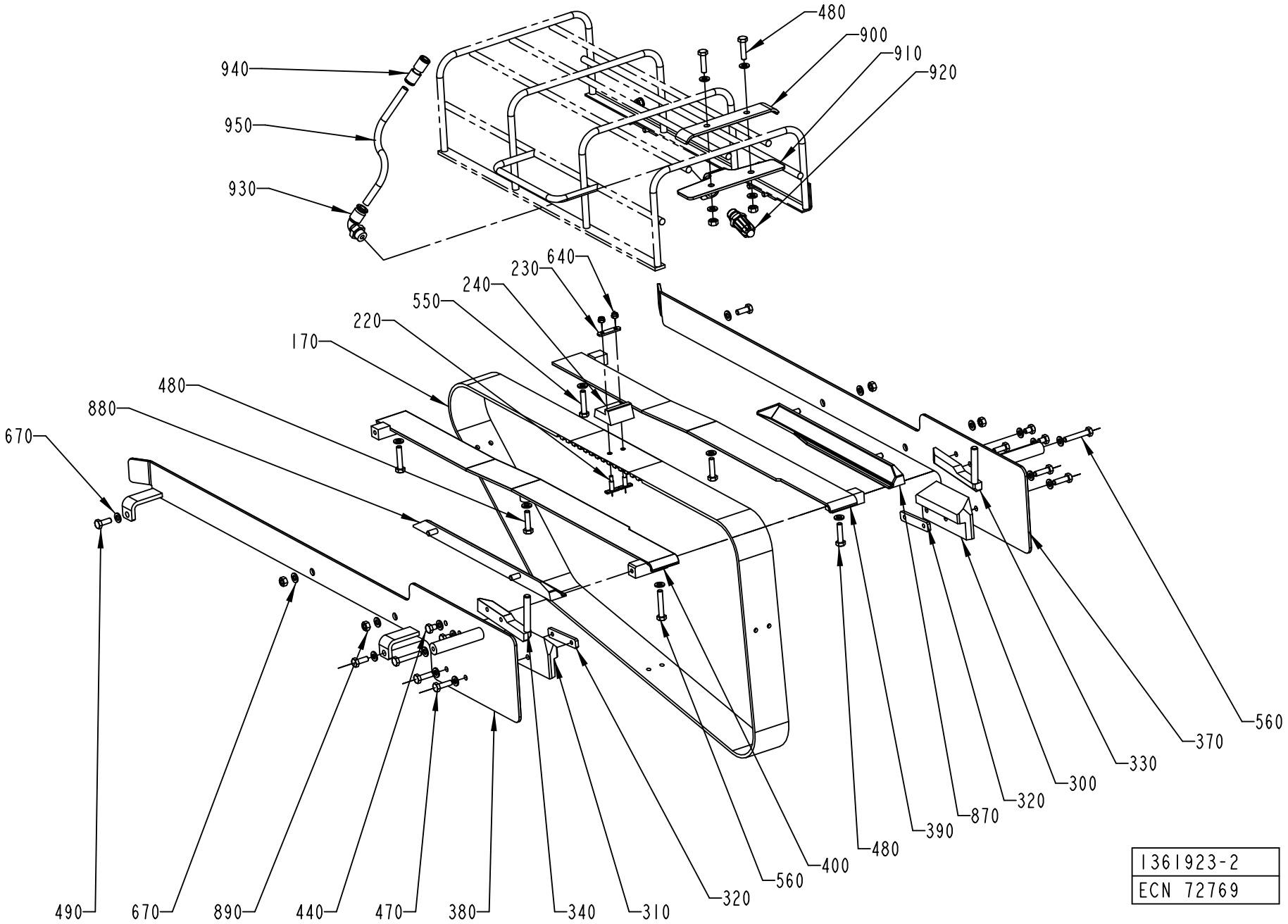

ECM: 368996 - 20090101
Group number: 1361923-0200
Assembly Drawing: 1361923-2_1_AC

This list covers pages from 5-66 to 5-75

Pos	Part No	UN	Qty	Description	Page No
TPA 1000SQ (See drawing on page: 5-66)					
170	1519338-0000		1	TIMING BELT	
220	1517476-0000		6	WEDGE	
230	1517477-0000		3	PLATE	
240	1519344-0000		3	CARRIER	
300	1517481-0000		1	SLIDE	
310	1517480-0000		1	SLIDE	
320	2543242-0000		2	ANGLE BLOCK	
330	1517478-0000		1	BAR	
340	1517479-0000		1	BAR	
370	1517474-0000		1	GUIDE	
380	1517475-0000		1	GUIDE	
390	1519345-0000		1	GUIDE	
400	1519346-0000		1	GUIDE	
440	312105-0366		4	SCREW M6S ISO 4017 M6X12 A480	
470	312105-0368		4	SCREW M6S ISO 4017 M6X16 A480	
480	312105-0372		3	SCREW M6S ISO 4017 M6X25 A480	
500	312105-0364		4	SCREW M6S ISO 4017 M6X10 A480	
550	312109-0376		2	SCREW M6S ISO 4017 M6X35 A480	
560	312105-0376		3	SCREW M6S ISO 4014 M6X35 A480	
640	312812-0312		6	HEXAGON NUT, NY-LOCK M4 A480	
670	315105-0153		20	WASHER BRB 6,4X12 RFR	
870	2637665-0000		1	GUIDE	
880	2637666-0000		1	GUIDE	
TBA 0200B (See drawing on page: 5-66)					
170	1144783-0000		1	TIMING BELT	
220	1346736-0000		8	WEDGE	
230	1144918-0000		4	PLATE	
240	1282287-0000		4	CARRIER	
300	1348136-0000		1	SLIDE	
310	1348142-0000		1	SLIDE	
320	1348169-0000		2	PLATE	
330	1348148-0000		1	BAR	
340	1348154-0000		1	BAR	
370	1499427-0000		1	GUIDE	
380	1499426-0000		1	GUIDE	
390	1282290-0000		1	GUIDE	
400	1282291-0000		1	GUIDE	
440	312105-0362		4	SCREW M6S ISO 4017 M6X8 A480	
470	312105-0370		4	SCREW M6S ISO 4017 M6X20 A480	
480	312105-0372		5	SCREW M6S ISO 4017 M6X25 A480	
550	312109-0374		2	SCREW M6S ISO 4017 M6X30 A480	
560	312105-0376		3	SCREW M6S ISO 4014 M6X35 A480	
640	312812-0312		8	HEXAGON NUT, NY-LOCK M4 A480	
670	315105-0153		28	WASHER BRB 6,4X12 RFR	
870	1517526-0000		1	GUIDE	
880	1517527-0000		1	GUIDE	
890	312605-0316		6	HEXAGON NUT, M6M M6 A280	
900	1499476-0000		1	HOLDER	
910	1499475-0000		1	HOLDER	
920	90424-0068		1	AIR NOZZLE, G1/4, MOD. 216 BSP	
930	342732-0104		1	ELBOW PIPE JOINT, EXT.THREAD, D=8MM-G1/4	
940	342728-0103		1	PIPE COUPLING 8 MM	
950	90166-0013	MM	700	TUBE 8 MM PA BLUE	
TBA 0200S (See drawing on page: 5-66)					
170	1144783-0000		1	TIMING BELT	
220	1346736-0000		8	WEDGE	
230	1144918-0000		4	PLATE	
240	1282287-0000		4	CARRIER	
300	1348134-0000		1	SLIDE	
310	1348140-0000		1	SLIDE	
320	1348169-0000		2	PLATE	
330	1348146-0000		1	BAR	
340	1348152-0000		1	BAR	
370	1499136-0000		1	GUIDE	
380	1499135-0000		1	GUIDE	
390	1282290-0000		1	GUIDE	
400	1282291-0000		1	GUIDE	
440	312105-0362		4	SCREW M6S ISO 4017 M6X8 A480	
470	312105-0370		4	SCREW M6S ISO 4017 M6X20 A480	
480	312105-0372		5	SCREW M6S ISO 4017 M6X25 A480	
550	312109-0374		2	SCREW M6S ISO 4017 M6X30 A480	
560	312105-0376		3	SCREW M6S ISO 4014 M6X35 A480	
640	312812-0312		8	HEXAGON NUT, NY-LOCK M4 A480	
670	315105-0153		28	WASHER BRB 6,4X12 RFR	
870	1517524-0000		1	GUIDE	
880	1517525-0000		1	GUIDE	
890	312605-0316		6	HEXAGON NUT, M6M M6 A280	
900	1499476-0000		1	HOLDER	
910	1499475-0000		1	HOLDER	
920	90424-0068		1	AIR NOZZLE, G1/4, MOD. 216 BSP	
930	342732-0104		1	ELBOW PIPE JOINT, EXT.THREAD, D=8MM-G1/4	
940	342728-0103		1	PIPE COUPLING 8 MM	
950	90166-0013	MM	700	TUBE 8 MM PA BLUE	

Machine Type | Group Description | Used-In | Group Number | Page No

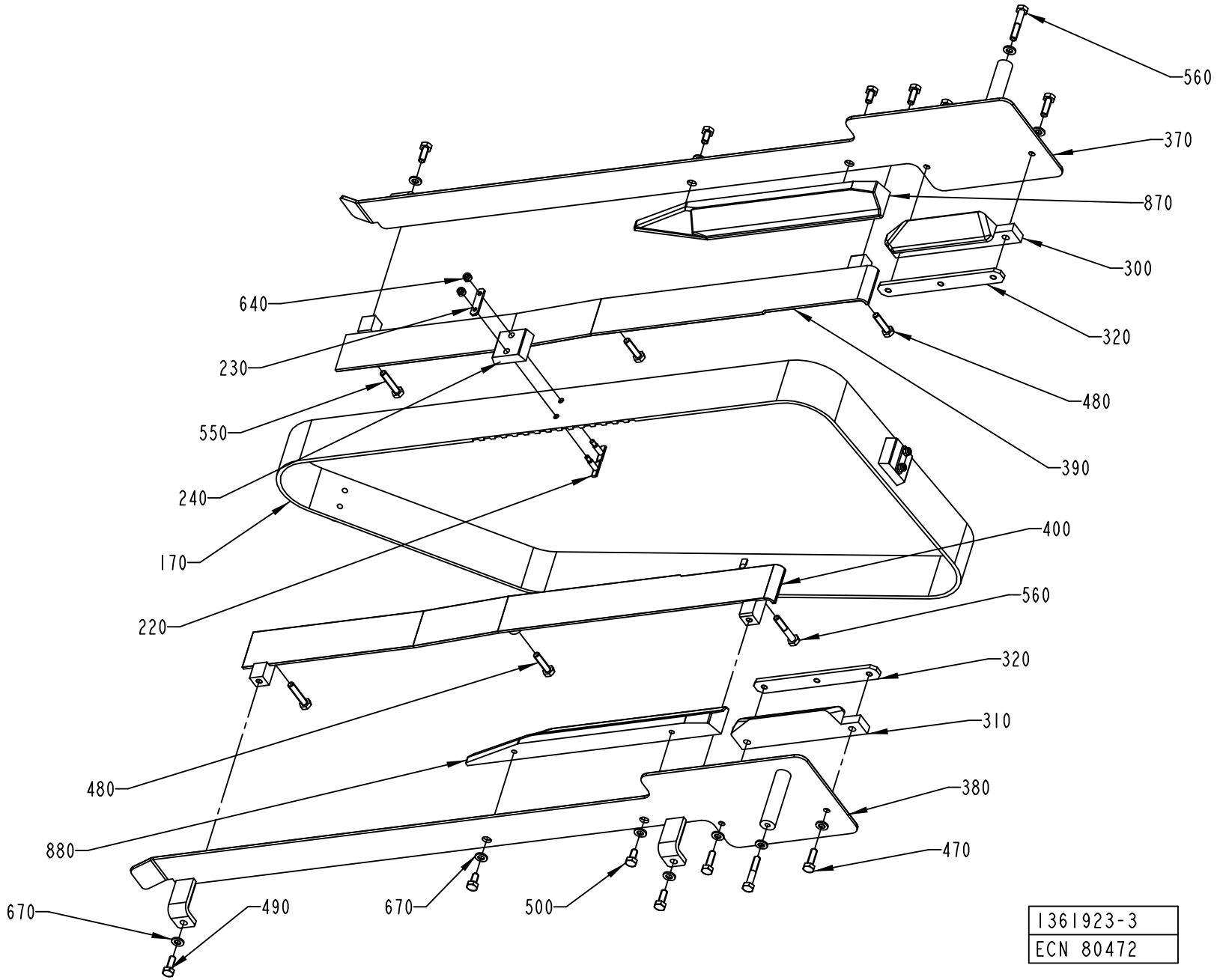
560
370
870
300
320
480
390
400
560
320
310
380
470
640
230
550
240
170
220
480
880
670
490
670
500
1361923-3
ECN 80472

ECM: 368996 - 20090101
Group number: 1361923-0200
Assembly Drawing: 1361923-3_1_AA

This list covers pages from 5-66 to 5-75

Pos	Part No	UN	Qty	Description	Page No
TBA 0250B (Cont'd) (See drawing on page: 5-66)					
170	1144783-0000		1	TIMING BELT	
220	1346736-0000		8	WEDGE	
230	1144918-0000		4	PLATE	
240	1282287-0000		4	CARRIER	
300	1348135-0000		1	SLIDE	
310	1348141-0000		1	SLIDE	
320	1348169-0000		2	PLATE	
330	1348147-0000		1	BAR	
340	1348153-0000		1	BAR	
370	1499427-0000		1	GUIDE	
380	1499426-0000		1	GUIDE	
390	1282290-0000		1	GUIDE	
400	1282291-0000		1	GUIDE	
440	312105-0362		4	SCREW M6S ISO 4017 M6X8 A480	
470	312105-0370		4	SCREW M6S ISO 4017 M6X20 A480	
480	312105-0372		5	SCREW M6S ISO 4017 M6X25 A480	
550	312109-0374		2	SCREW M6S ISO 4017 M6X30 A480	
560	312105-0376		3	SCREW M6S ISO 4014 M6X35 A480	
640	312812-0312		8	HEXAGON NUT, NY-LOCK M4 A480	
670	315105-0153		28	WASHER BRB 6,4X12 RFR	
870	1517526-0000		1	GUIDE	
880	1517527-0000		1	GUIDE	
890	312605-0316		6	HEXAGON NUT, M6M M6 A280	
900	1499476-0000		1	HOLDER	
910	1499475-0000		1	HOLDER	
920	90424-0068		1	AIR NOZZLE, G1/4, MOD. 216 BSP	
930	342732-0104		1	ELBOW PIPE JOINT, EXT.THREAD, D=8MM-G1/4	
940	342728-0103		1	PIPE COUPLING 8 MM	
950	90166-0013	MM	700	TUBE 8 MM PA BLUE	
TBA 0250S (See drawing on page: 5-66)					
170	1144783-0000		1	TIMING BELT	
220	1346736-0000		8	WEDGE	
230	1144918-0000		4	PLATE	
240	2551120-0000		4	CARRIER	
300	2529605-0000		1	SLIDE	
310	2529606-0000		1	SLIDE	
320	1279409-0000		2	PLATE	
330	2529608-0000		1	BAR	
340	2529607-0000		1	BAR	
370	2529603-0000		1	GUIDE	
380	2529604-0000		1	GUIDE	
390	1282290-0000		1	GUIDE	
400	1282291-0000		1	GUIDE	
440	312105-0362		4	SCREW M6S ISO 4017 M6X8 A480	
470	312105-0370		4	SCREW M6S ISO 4017 M6X20 A480	
480	312105-0372		5	SCREW M6S ISO 4017 M6X25 A480	
640	312812-0312		8	HEXAGON NUT, NY-LOCK M4 A480	
670	315105-0153		28	WASHER BRB 6,4X12 RFR	
870	1517524-0000		1	GUIDE	
880	1517525-0000		1	GUIDE	
890	312605-0316		6	HEXAGON NUT, M6M M6 A280	
900	1499476-0000		1	HOLDER	
910	1499475-0000		1	HOLDER	
920	90424-0068		1	AIR NOZZLE, G1/4, MOD. 216 BSP	
930	342732-0104		1	ELBOW PIPE JOINT, EXT.THREAD, D=8MM-G1/4	
940	342728-0103		1	PIPE COUPLING 8 MM	
950	90166-0013	MM	700	TUBE 8 MM PA BLUE	
TBA 0330S (See drawing on page: 5-66)					
170	1144783-0000		1	TIMING BELT	
230	1144918-0000		4	PLATE	
240	1282287-0000		4	CARRIER	
300	2544997-0000		1	SLIDE	
310	2544998-0000		1	SLIDE	
320	1279409-0000		2	PLATE	
330	2545000-0000		1	BAR	
340	2544999-0000		1	BAR	
370	2544996-0000		1	GUIDE	
380	2544995-0000		1	GUIDE	
390	2529610-0000		1	GUIDE	
400	2529609-0000		1	GUIDE	
440	312105-0362		4	SCREW M6S ISO 4017 M6X8 A480	
470	312105-0370		4	SCREW M6S ISO 4017 M6X20 A480	
480	312105-0372		3	SCREW M6S ISO 4017 M6X25 A480	
550	312109-0374		2	SCREW M6S ISO 4017 M6X30 A480	
560	312105-0376		3	SCREW M6S ISO 4014 M6X35 A480	
640	312812-0312		8	HEXAGON NUT, NY-LOCK M4 A480	
670	315105-0153		16	WASHER BRB 6,4X12 RFR	
890	312605-0316		2	HEXAGON NUT, M6M M6 A280	
TBA 0500B (See drawing on page: 5-66)					
170	1144783-0000		1	TIMING BELT	
220	1346471-0000		8	WEDGE	
230	1144918-0000		4	PLATE	
240	1558700-0000		4	CARRIER	
300	1539874-0000		1	SLIDE	

INFEED CONVEYOR VARIANT

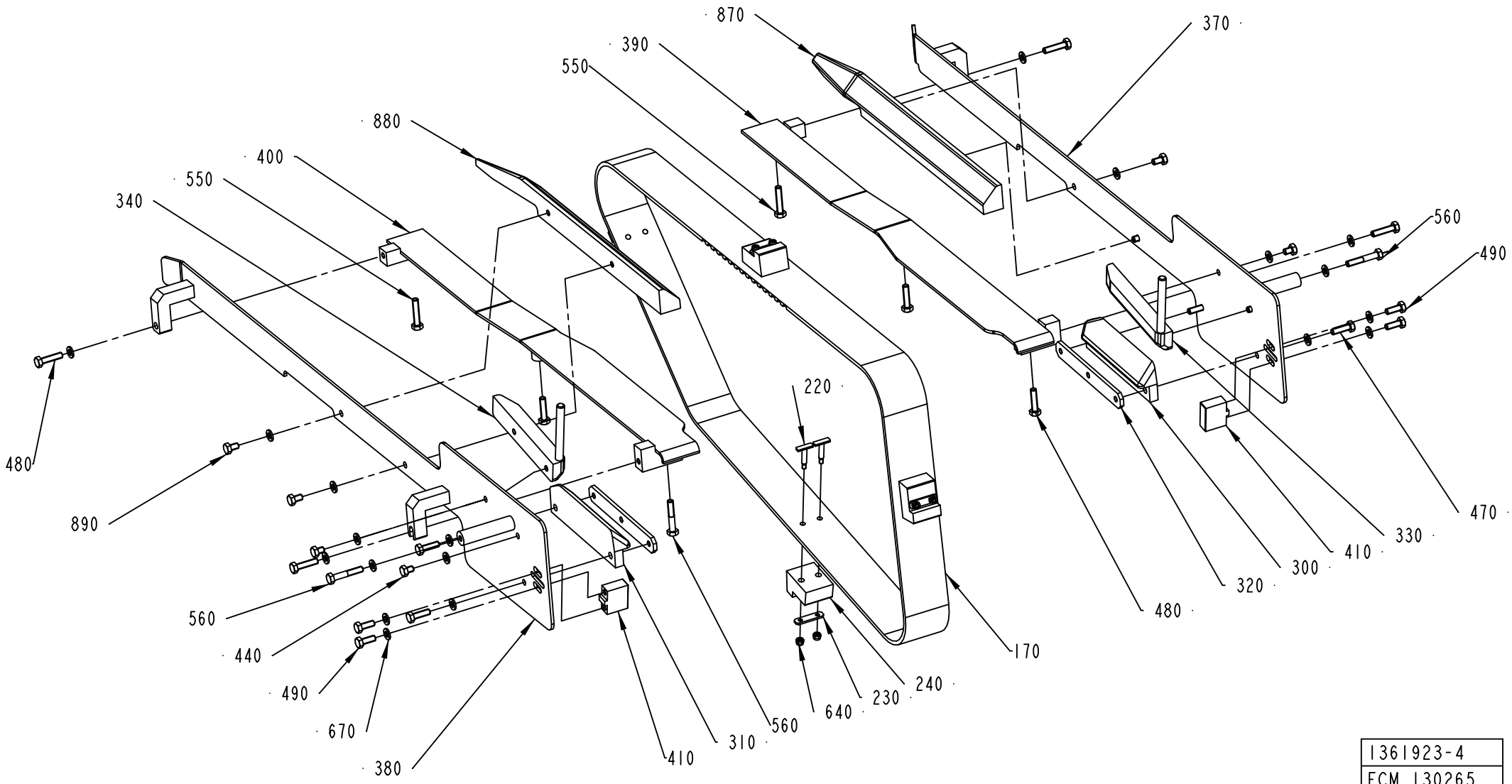

1361923-4
ECM 130265

ECM: 368996 - 20090101
Group number: 1361923-0200
Assembly Drawing: 1361923-4_1_AB

This list covers pages from 5-66 to 5-75

Pos	Part No	UN	Qty	Description	Page No
TBA 0500B (Cont'd) (See drawing on page: 5-66)					
310	1539875-0000		1	SLIDE	
320	1539876-0000		2	PLATE	
330	1539877-0000		1	BAR	
340	1539878-0000		1	BAR	
370	1539879-0000		1	GUIDE	
380	1539880-0000		1	GUIDE	
390	1317651-0000		1	GUIDE	
400	1317650-0000		1	GUIDE	
470	312105-0370		4	SCREW M6S ISO 4017 M6X20 A480	
480	312105-0372		3	SCREW M6S ISO 4017 M6X25 A480	
550	312109-0374		2	SCREW M6S ISO 4017 M6X30 A480	
560	312105-0376		3	SCREW M6S ISO 4014 M6X35 A480	
640	312812-0312		8	HEXAGON NUT, NY-LOCK M4 A480	
670	315105-0153		20	WASHER BRB 6,4X12 RFR	
TBA 0500S (See drawing on page: 5-66)					
170	1144783-0000		1	TIMING BELT	
220	1346736-0000		8	WEDGE	
230	1144918-0000		4	PLATE	
240	1282287-0000		4	CARRIER	
300	1499418-0000		1	SLIDE	
310	1499422-0000		1	SLIDE	
320	1144621-0000		2	PLATE	
330	1499417-0000		1	BAR	
340	1499423-0000		1	BAR	
370	1499401-0000		1	GUIDE	
380	1499400-0000		1	GUIDE	
390	1317651-0000		1	GUIDE	
400	1317650-0000		1	GUIDE	
440	312105-0362		4	SCREW M6S ISO 4017 M6X8 A480	
470	312105-0370		4	SCREW M6S ISO 4017 M6X20 A480	
480	312105-0372		3	SCREW M6S ISO 4017 M6X25 A480	
550	312109-0374		2	SCREW M6S ISO 4017 M6X30 A480	
560	312105-0376		3	SCREW M6S ISO 4014 M6X35 A480	
640	312812-0312		8	HEXAGON NUT, NY-LOCK M4 A480	
670	315105-0153		20	WASHER BRB 6,4X12 RFR	
TBA 1000B (See drawing on page: 5-66)					
170	1144783-0000		1	TIMING BELT	
220	1346471-0000		8	WEDGE	
230	1144918-0000		4	PLATE	
240	1144919-0000		4	CARRIER	
300	1348133-0000		1	SLIDE	
310	1348139-0000		1	SLIDE	
320	1279409-0000		2	PLATE	
330	1348144-0000		1	BAR	
340	1348150-0000		1	BAR	
370	1519089-0000		1	GUIDE	
380	1519090-0000		1	GUIDE	
390	1282290-0000		1	GUIDE	
400	1282291-0000		1	GUIDE	
440	312105-0362		4	SCREW M6S ISO 4017 M6X8 A480	
470	312105-0370		4	SCREW M6S ISO 4017 M6X20 A480	
480	312105-0372		3	SCREW M6S ISO 4017 M6X25 A480	
550	312109-0374		2	SCREW M6S ISO 4017 M6X30 A480	
560	312105-0376		3	SCREW M6S ISO 4014 M6X35 A480	
640	312812-0312		8	HEXAGON NUT, NY-LOCK M4 A480	
670	315105-0153		20	WASHER BRB 6,4X12 RFR	
TBA 1000S (See drawing on page: 5-66)					
170	1144783-0000		1	TIMING BELT	
220	1346471-0000		8	WEDGE	
230	1144918-0000		4	PLATE	
240	1144919-0000		4	CARRIER	
300	1348132-0000		1	SLIDE	
310	1348138-0000		1	SLIDE	
320	1279409-0000		2	PLATE	
330	1348145-0000		1	BAR	
340	1348151-0000		1	BAR	
370	1517242-0000		1	GUIDE	
380	1517243-0000		1	GUIDE	
390	1317651-0000		1	GUIDE	
400	1317650-0000		1	GUIDE	
440	312105-0362		4	SCREW M6S ISO 4017 M6X8 A480	
470	312105-0370		4	SCREW M6S ISO 4017 M6X20 A480	
480	312105-0372		3	SCREW M6S ISO 4017 M6X25 A480	
550	312109-0374		2	SCREW M6S ISO 4017 M6X30 A480	
560	312105-0376		3	SCREW M6S ISO 4014 M6X35 A480	
640	312812-0312		8	HEXAGON NUT, NY-LOCK M4 A480	
670	315105-0153		20	WASHER BRB 6,4X12 RFR	
TBA 1000SQ (See drawing on page: 5-66)					
170	1144783-0000		1	TIMING BELT	
220	1346471-0000		8	WEDGE	
230	1144918-0000		4	PLATE	
240	1282848-0000		4	CARRIER	
300	1490033-0000		1	SLIDE	

Machine Type | Group Description | Used-In | Group Number | Page No

See previous drawings pages: 5-66, 5-68, 5-70.

ECM: 368996 - 20090101
Group number: 1361923-0200
Assembly Drawing: 1361923-4_1_AB

This list covers pages from 5-66 to 5-75

Pos	Part No	UN	Qty	Description	Page No
TBA 1000SQ (Cont'd) (See drawing on page: 5-66)					
310	1490034-0000		1	SLIDE	
320	1144621-0000		2	PLATE	
330	1490035-0000		1	BAR	
340	1490036-0000		1	BAR	
370	1512308-0000		1	GUIDE	
380	1512307-0000		1	GUIDE	
390	1317651-0000		1	GUIDE	
400	1317650-0000		1	GUIDE	
440	312105-0362		4	SCREW M6S ISO 4017 M6X8 A480	
470	312105-0370		4	SCREW M6S ISO 4017 M6X20 A480	
480	312105-0372		3	SCREW M6S ISO 4017 M6X25 A480	
550	312109-0374		2	SCREW M6S ISO 4017 M6X30 A480	
560	312105-0376		3	SCREW M6S ISO 4014 M6X35 A480	
640	312812-0312		8	HEXAGON NUT, NY-LOCK M4 A480	
670	315105-0153		20	WASHER BRB 6,4X12 RFR	
TBA 1500S (See drawing on page: 5-66)					
170	1349152-0000		1	TIMING BELT	
220	1346471-0000		6	WEDGE	
230	1144918-0000		3	PLATE	
240	1282848-0000		3	CARRIER	
300	1334561-0000		1	SLIDE	
310	1334562-0000		1	SLIDE	
320	1144621-0000		2	PLATE	
330	1317805-0000		1	BAR	
340	1334271-0000		1	BAR	
370	1519093-0000		1	GUIDE	
380	1519094-0000		1	GUIDE	
390	1478215-0000		1	SLIDE	
400	1478214-0000		1	SLIDE	
440	312105-0362		4	SCREW M6S ISO 4017 M6X8 A480	
470	312105-0370		4	SCREW M6S ISO 4017 M6X20 A480	
480	312105-0372		3	SCREW M6S ISO 4017 M6X25 A480	
550	312109-0374		2	SCREW M6S ISO 4017 M6X30 A480	
560	312105-0376		3	SCREW M6S ISO 4014 M6X35 A480	
640	312812-0312		6	HEXAGON NUT, NY-LOCK M4 A480	
670	315105-0153		20	WASHER BRB 6,4X12 RFR	
TPA 0250SQ (See drawing on page: 5-66)					
170	1144783-0000		1	TIMING BELT	
220	1346736-0000		8	WEDGE	
230	1144918-0000		4	PLATE	
240	1558864-0000		4	CARRIER	
300	1549852-0000		1	SLIDE	
310	1549853-0000		1	SLIDE	
320	1144621-0000		2	PLATE	
330	1549854-0000		1	BAR	
340	1549855-0000		1	BAR	
370	1549856-0000		1	GUIDE	
380	1549857-0000		1	GUIDE	
390	1317651-0000		1	GUIDE	
400	1317650-0000		1	GUIDE	
440	312105-0362		4	SCREW M6S ISO 4017 M6X8 A480	
480	312105-0372		5	SCREW M6S ISO 4017 M6X25 A480	
500	312105-0364		4	SCREW M6S ISO 4017 M6X10 A480	
550	312109-0374		2	SCREW M6S ISO 4017 M6X30 A480	
640	312812-0312		8	HEXAGON NUT, NY-LOCK M4 A480	
670	315105-0153		24	WASHER BRB 6,4X12 RFR	
870	1539894-0000		1	GUIDE	
880	1539895-0000		1	GUIDE	
890	312605-0316		2	HEXAGON NUT, M6M M6 A280	
900	1499476-0000		1	HOLDER	
910	1499475-0000		1	HOLDER	
920	90424-0068		1	AIR NOZZLE, G1/4, MOD. 216 BSP	
930	342732-0104		1	ELBOW PIPE JOINT, EXT.THREAD, D=8MM-G1/4	
940	342728-0103		1	PIPE COUPLING 8 MM	
950	90166-0013	MM	700	TUBE 8 MM PA BLUE	
TPA 0330SQ (See drawing on page: 5-68)					
170	1144783-0000		1	TIMING BELT	
220	1346736-0000		8	WEDGE	
230	1144918-0000		4	PLATE	
240	1558864-0000		4	CARRIER	
300	1532257-0000		1	SLIDE	
310	1532258-0000		1	SLIDE	
320	1144621-0000		2	PLATE	
370	1532261-0000		1	GUIDE	
380	1532262-0000		1	GUIDE	
390	1317651-0000		1	GUIDE	
400	1317650-0000		1	GUIDE	
470	312105-0370		4	SCREW M6S ISO 4017 M6X20 A480	
480	312105-0372		3	SCREW M6S ISO 4017 M6X25 A480	
500	312105-0366		4	SCREW M6S ISO 4017 M6X12 A480	
550	312109-0374		2	SCREW M6S ISO 4017 M6X30 A480	
560	312105-0376		3	SCREW M6S ISO 4014 M6X35 A480	
640	312812-0312		8	HEXAGON NUT, NY-LOCK M4 A480	

Machine Type | Group Description | Used-In | Group Number | Page No

See previous drawings pages: 5-66, 5-68, 5-70.

Pos	Part No	UN	Qty	Description	Page No
TPA 0330SQ (Cont'd) (See drawing on page: 5-68)					
670	315105-0153		20	WASHER BRB 6,4X12 RFR	
870	1532263-0000		1	GUIDE	
880	1532264-0000		1	GUIDE	
TPA 0500SQ (See drawing on page: 5-70)					
170	1144783-0000		1	TIMING BELT	
220	1346471-0000		8	WEDGE	
230	1144918-0000		4	PLATE	
240	1532256-0000		4	CARRIER	
300	1549513-0000		1	SLIDE	
310	1549514-0000		1	SLIDE	
320	1144621-0000		2	PLATE	
330	1549515-0000		1	BAR	
340	1549516-0000		1	BAR	
370	1549517-0000		1	GUIDE	
380	1549518-0000		1	GUIDE	
390	1549523-0000		1	GUIDE	
400	1549522-0000		1	GUIDE	
410	2545545-0000		2	INSERT	
440	312105-0362		4	SCREW M6S ISO 4017 M6X8 A480	
470	312105-0370		4	SCREW M6S ISO 4017 M6X20 A480	
480	312105-0372		7	SCREW M6S ISO 4017 M6X25 A480	
550	312109-0374		2	SCREW M6S ISO 4017 M6X30 A480	
560	312105-0376		3	SCREW M6S ISO 4014 M6X35 A480	
640	312812-0312		8	HEXAGON NUT, NY-LOCK M4 A480	
670	315105-0153		28	WASHER BRB 6,4X12 RFR	
870	1539983-0000		1	GUIDE	
880	1539984-0000		1	GUIDE	
890	312105-0364		4	SCREW M6S ISO 4017 M6X10 A480	
Common Parts					
490	312105-0368		4	SCREW M6S ISO 4017 M6X16 A480	

Pos	Part No	UN	Qty	Description	Page No

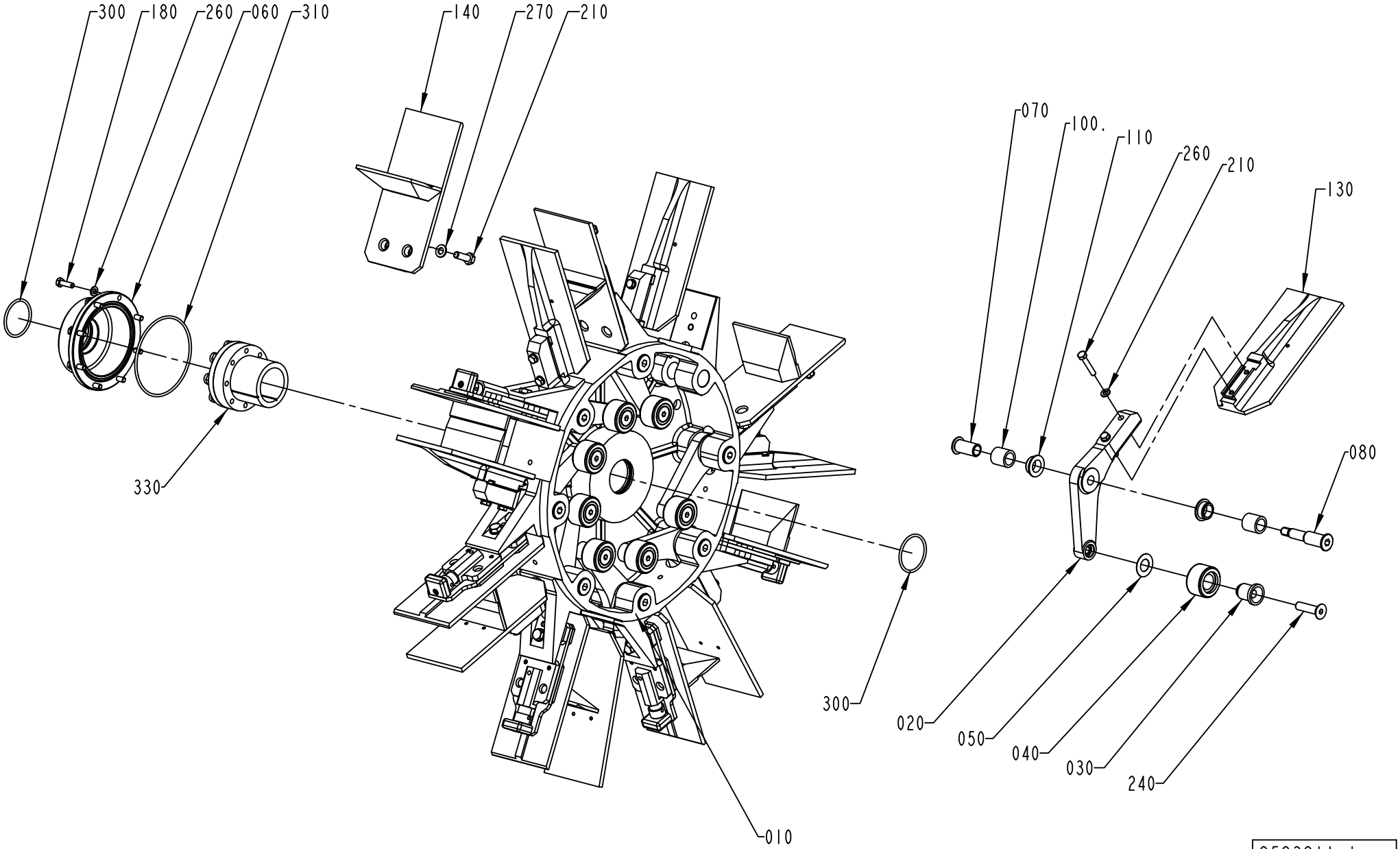

2523811-1
ECM 110155

ECM: 369005 - 20090101
Group number: 2523811-0100
Assembly Drawing: 2523811-1_1_AA

This list covers pages from 5-76 to 5-81

Pos	Part No	UN	Qty	Description	Page No
TPA 0250SQ, TPA 0200SQ (See drawing on page: 5-76)					
010	1558737-0000		1	HUB	
130	2658237-0100		8	FLAP	**5-83**
140	2523812-0100		8	FLAP	**5-85, 5-87, 5-89**
200	312105-0376		16	SCREW M6S ISO 4014 M6X35 A480	
260	315105-0153		24	WASHER BRB 6,4X12 RFR	
TPA 1000SQ, TPA 0750SQ (See drawing on page: 5-76)					
010	1144264-0000		1	HUB	
130	2658237-0100		8	FLAP	**5-83**
140	2523812-0100		8	FLAP	**5-85, 5-87, 5-89**
160	2802612-0000		8	BOTTOM	
190	312155-0379		8	SCREW DIN 7991 MF6S M6X45 A4 70	
200	312105-0378		16	SCREW M6S ISO 4014 M6X40 A480	
260	315105-0153		24	WASHER BRB 6,4X12 RFR	
1000SQ NODIMC, 0500SQ NODIMC (See drawing on page: 5-78)					
010	1144264-0000		1	HUB	
120	2539277-0000		8	SHIM	
130	2518035-0000		8	FLAP	
140	2523812-0100		8	FLAP	**5-85, 5-87, 5-89**
160	1511558-0000		8	BOTTOM	
190	312155-0370		8	SCREW DIN 7991 MF6S M6X20 A4 70	
200	312105-0376		16	SCREW M6S ISO 4014 M6X35 A480	
260	315105-0153		24	WASHER BRB 6,4X12 RFR	
0500B NODIMC, 1000B NODIMC (See drawing on page: 5-78)					
010	1144264-0000		1	HUB	
120	2539277-0000		8	SHIM	
130	1260704-0000		8	FLAP	
140	2523812-0100		8	FLAP	**5-85, 5-87, 5-89**
200	312105-0376		16	SCREW M6S ISO 4014 M6X35 A480	
260	315105-0153		24	WASHER BRB 6,4X12 RFR	
TBA 0200B, TBA 0250B, TBA 0330S (See drawing on page: 5-76)					
010	1144264-0000		1	HUB	
130	2651146-0000		8	FLAP	
140	2523812-0100		8	FLAP	**5-85, 5-87, 5-89**
200	312105-0376		16	SCREW M6S ISO 4014 M6X35 A480	
260	315105-0153		24	WASHER BRB 6,4X12 RFR	
TBA 0200M, TBA 0250S (See drawing on page: 5-76)					
010	1144264-0000		1	HUB	
130	2522201-0000		8	FLAP	
140	2523812-0100		8	FLAP	**5-85, 5-87, 5-89**
190	312155-0370		8	SCREW DIN 7991 MF6S M6X20 A4 70	
TBA 0200SQ, TBA 0250SQ (See drawing on page: 5-76)					
010	1144264-0000		1	HUB	
130	2668223-0000		8	FLAP	
140	2523812-0100		8	FLAP	**5-85, 5-87, 5-89**
190	312155-0370		8	SCREW DIN 7991 MF6S M6X20 A4 70	
200	312105-0376		16	SCREW M6S ISO 4014 M6X35 A480	
260	315105-0153		24	WASHER BRB 6,4X12 RFR	
TBA 0500B, TBA 1000B (See drawing on page: 5-78)					
010	1144264-0000		1	HUB	
130	1260704-0000		8	FLAP	
140	2523812-0100		8	FLAP	**5-85, 5-87, 5-89**
200	312105-0376		16	SCREW M6S ISO 4014 M6X35 A480	
260	315105-0153		24	WASHER BRB 6,4X12 RFR	
TBA 0500SQ, TBA 1000SQ (See drawing on page: 5-78)					
010	1144264-0000		1	HUB	
120	2539277-0000		8	SHIM	
130	1487739-0000		8	FLAP	
140	2523812-0100		8	FLAP	**5-85, 5-87, 5-89**
160	1511558-0000		8	BOTTOM	
190	312155-0370		8	SCREW DIN 7991 MF6S M6X20 A4 70	
200	312105-0376		16	SCREW M6S ISO 4014 M6X35 A480	
260	315105-0153		24	WASHER BRB 6,4X12 RFR	
TBA 1890S, TBA 2000S, TBA 1400B (See drawing on page: 5-80)					
010	1144264-0000		1	HUB	
090	2693197-0000		32	INSERT	
130	2566321-0000		8	FLAP	
140	2566323-0000		8	FLAP	
150	2638180-0000		16	INSERT	
160	2658390-0100		8	BOTTOM	**5-91**
170	2588327-0000		8	INSERT	
190	312115-0370		8	SCREW ISO4762 M6X20 A4 80	
200	2693200-0000		16	SCREW	
205	315115-0153		16	WASHER PLAIN, TBRB 6,4/12 H=3	
250	312155-0287		32	SCREW DIN 7991 MF6S M4X8 A4 70	
260	315105-0153		8	WASHER BRB 6,4X12 RFR	
Common Parts					
020	1279559-0000		8	ARM	
030	1144312-0000		8	AXLE PIN	
040	1144335-0000		8	ROLLER	
050	1144354-0000		8	WASHER	
060	1144356-0000		1	COVER	
070	1296970-0000		8	SCREW BUSHING	
080	1296969-0000		8	SCREW HOLDER	

Machine Type | Group Description | Used-In | Group Number | Page No

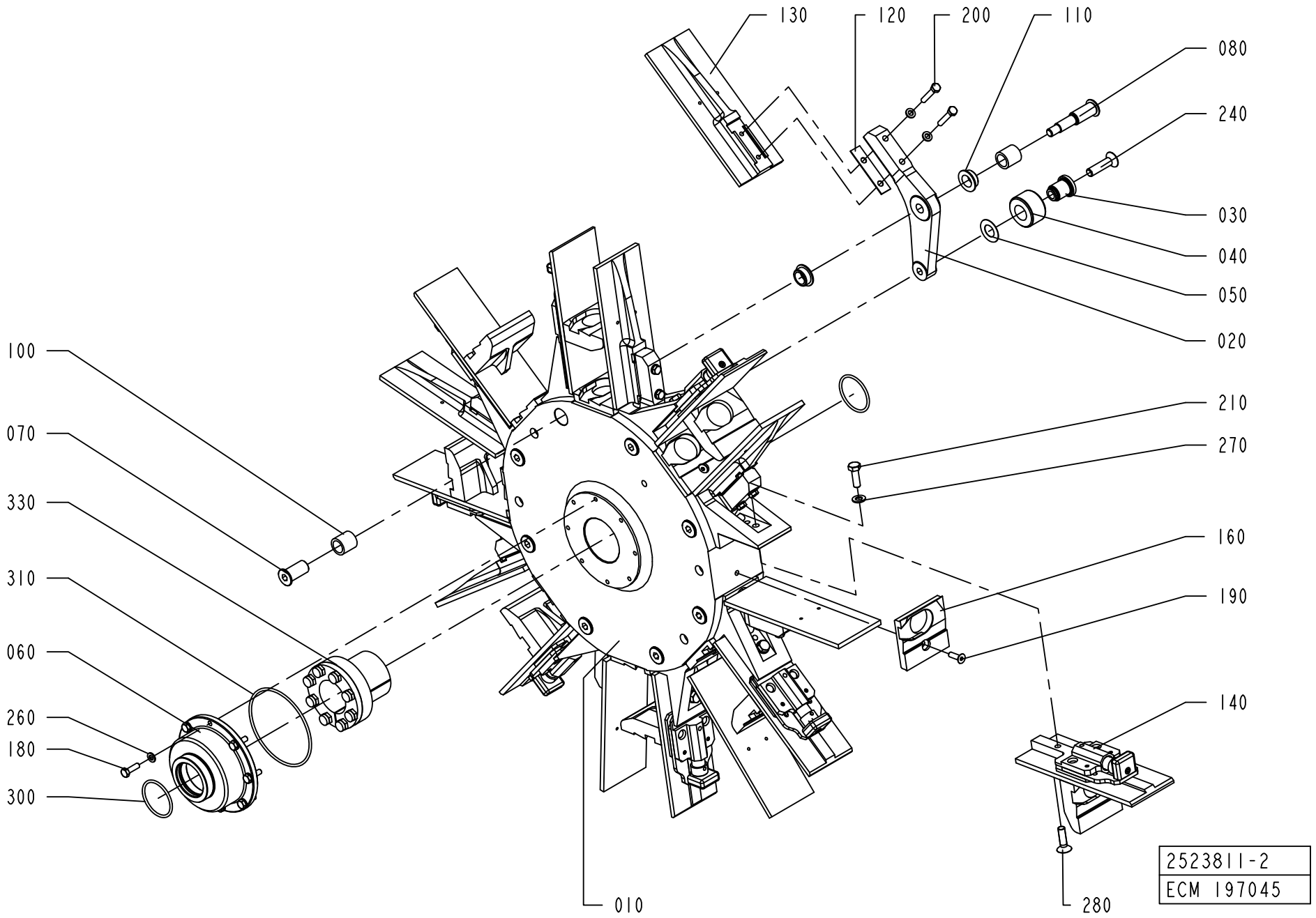
130
120
200
110
080
240
030
040
050
020
100
070
330
310
060
260
180
300
210
270
160
190
140
010
280
2523811-2
ECM 197045

ECM: 369005 - 20090101
Group number: 2523811-0100
Assembly Drawing: 2523811-2_1_AB

This list covers pages from 5-76 to 5-81

Pos	Part No	UN	Qty	Description	Page No
Common Parts (Cont'd)					
100	1144417-0000		16	BUSHING	
110	1282708-0000		16	BUSHING	
180	312105-0370		8	SCREW M6S ISO 4017 M6X20 A480	
210	312105-0453		8	SCREW M6S ISO 4017 M8X25 A480	
240	312155-0499		8	SCREW DIN 7991 MF6S M10X40 A4 70	
270	315105-0165		8	WASHER BRB 8,4X16 RFR	
300	315202-0225		2	O-RING 44,2X3 MM	
310	315202-0311		1	O-RING 99,5X3 MM	
330	90208-0087		1	CLAMPING ELEMENT WITH SLEEVE, 45X59 MM	

Pos	Part No	UN	Qty	Description	Page No

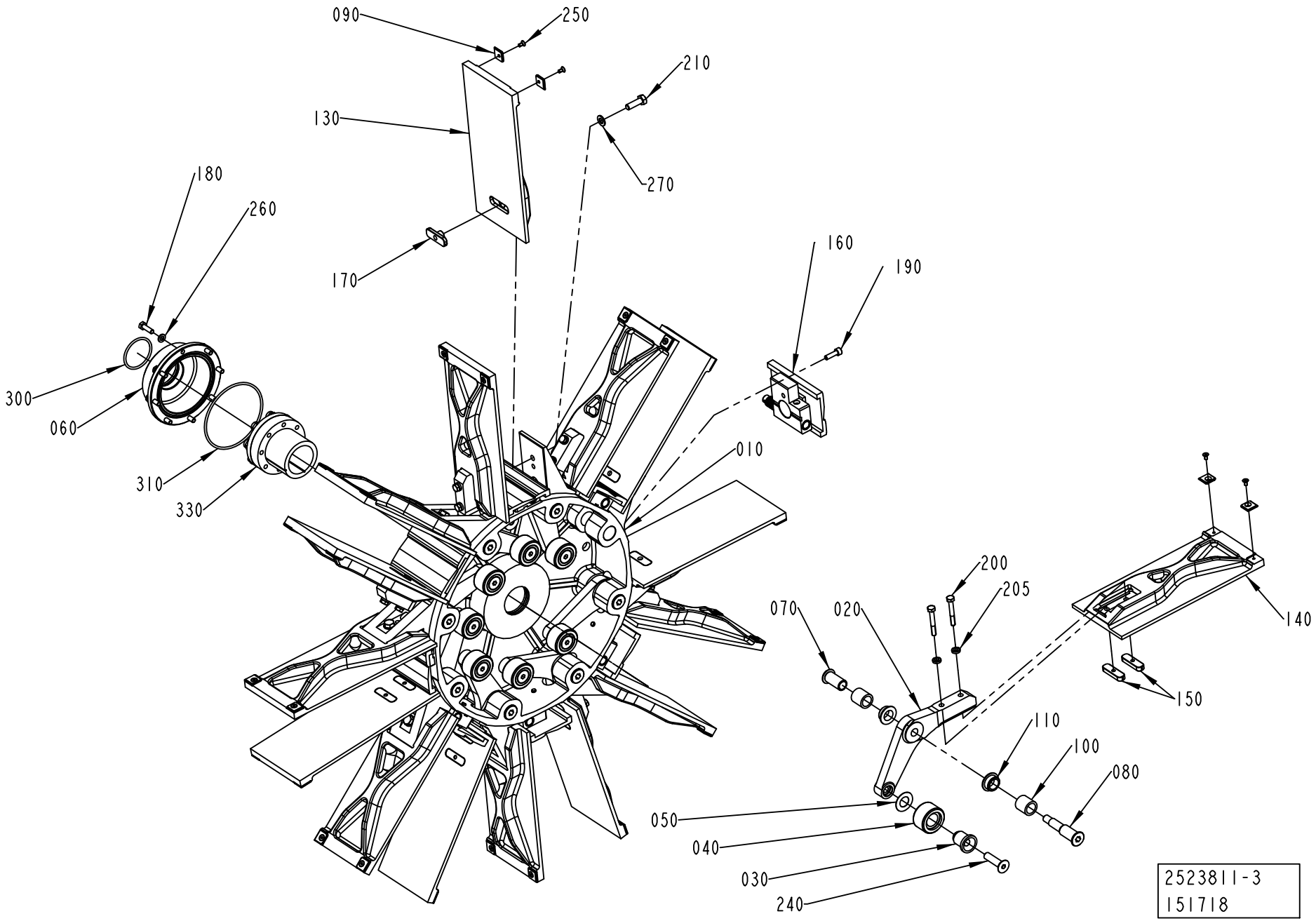
090
250
210
130
270
180
260
170
160
190
300
060
010
310
330
200
205
070
020
140
150
110
100
080
050
040
030
240
2523811-3
151718

Pos	Part No	UN	Qty	Description	Page No
SEE PREVIOUS LISTS PAGES: 5-77, 5-79.					

Pos	Part No	UN	Qty	Description	Page No

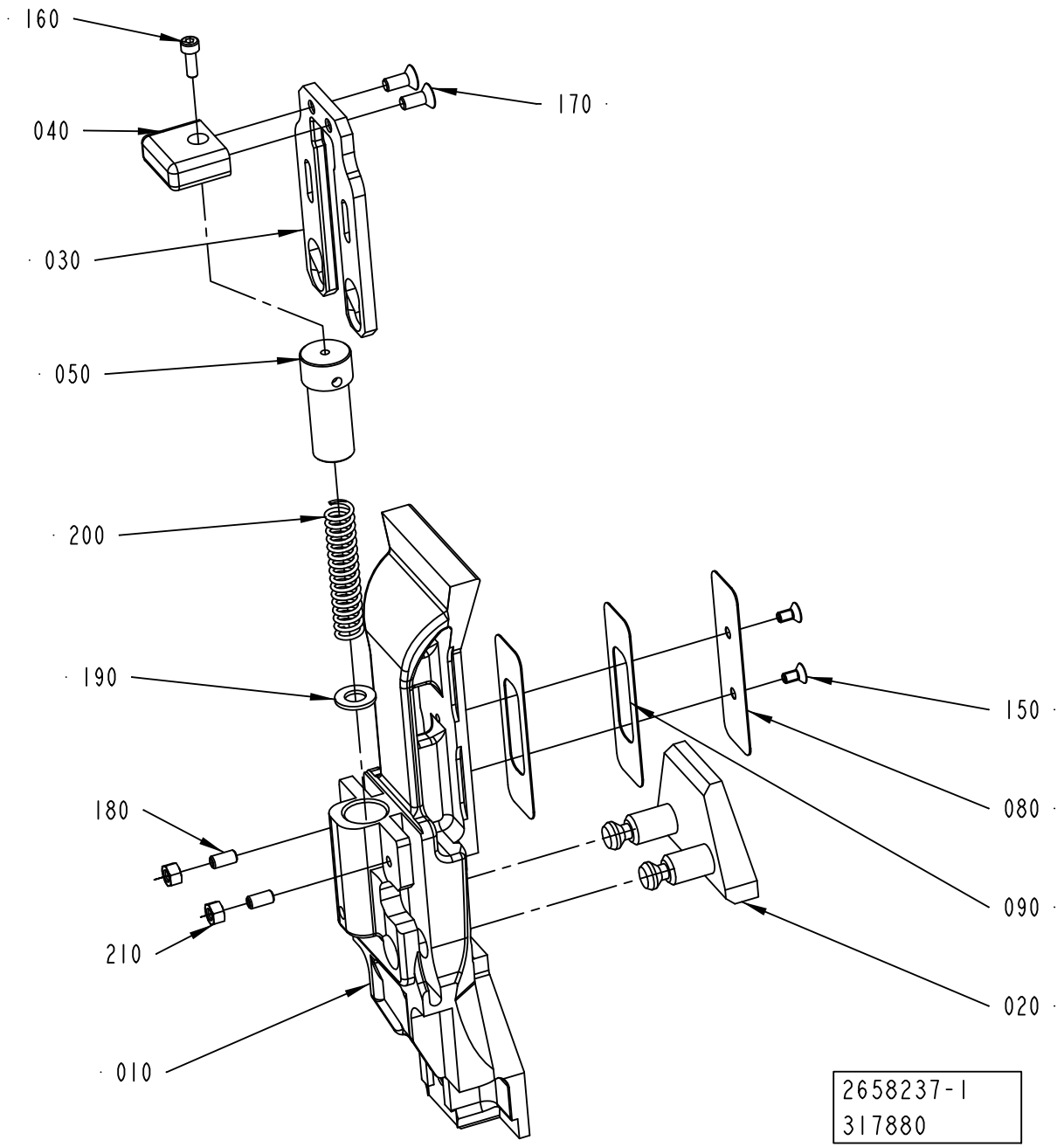
160
170
040
030
050
200
190
150
080
180
090
210
020
010
2658237-1
317880

ECM: 369017 - 20090101
Group number: 2658237-0100
Assembly Drawing: 2658237-1_1_AB

Pos	Part No	UN	Qty	Description	Page No
TPA 0250SQ, TPA 0200SQ					
010	2862750-0000		1	FLAP	
020	2674238-0000		1	BOTTOM	
030	2674239-0000		1	SLIDE	
TPA 0750SQ					
010	2658238-0000		1	FLAP	
020	2658239-0000		1	BOTTOM	
030	2658241-0000		1	SLIDE	
080	1549829-0000		1	VOLUME BULGE	
090	1549830-0000		2	VOLUME SHIM	
150	312155-0287		2	SCREW DIN 7991 MF6S M4X8 A4 70	
TPA 1000SQ					
010	2658238-0000		1	FLAP	
020	2658240-0000		1	BOTTOM	
030	2658241-0000		1	SLIDE	
080	1549829-0000		1	VOLUME BULGE	
090	1549830-0000		2	VOLUME SHIM	
150	312155-0287		2	SCREW DIN 7991 MF6S M4X8 A4 70	
Common Parts					
040	2526563-0000		1	HANDLE	
050	2526567-0000		1	CYLINDER	
160	312115-0291		1	SCREW ISO4762 M4X12 A4 80	
170	312155-0327		2	SCREW DIN 7991 MF6S M5X12 A4 70	
180	312318-0329		2	SCREW ISO4029 M5X16 A4	
190	315105-0165		1	WASHER BRB 8,4X16 RFR	
200	90459-0969		1	COMP. SPRING A D22430, 1,6X11,6X58,5	
210	312605-0314		2	HEXAGON NUT, M6M M5 A280	

Pos	Part No	UN	Qty	Description	Page No

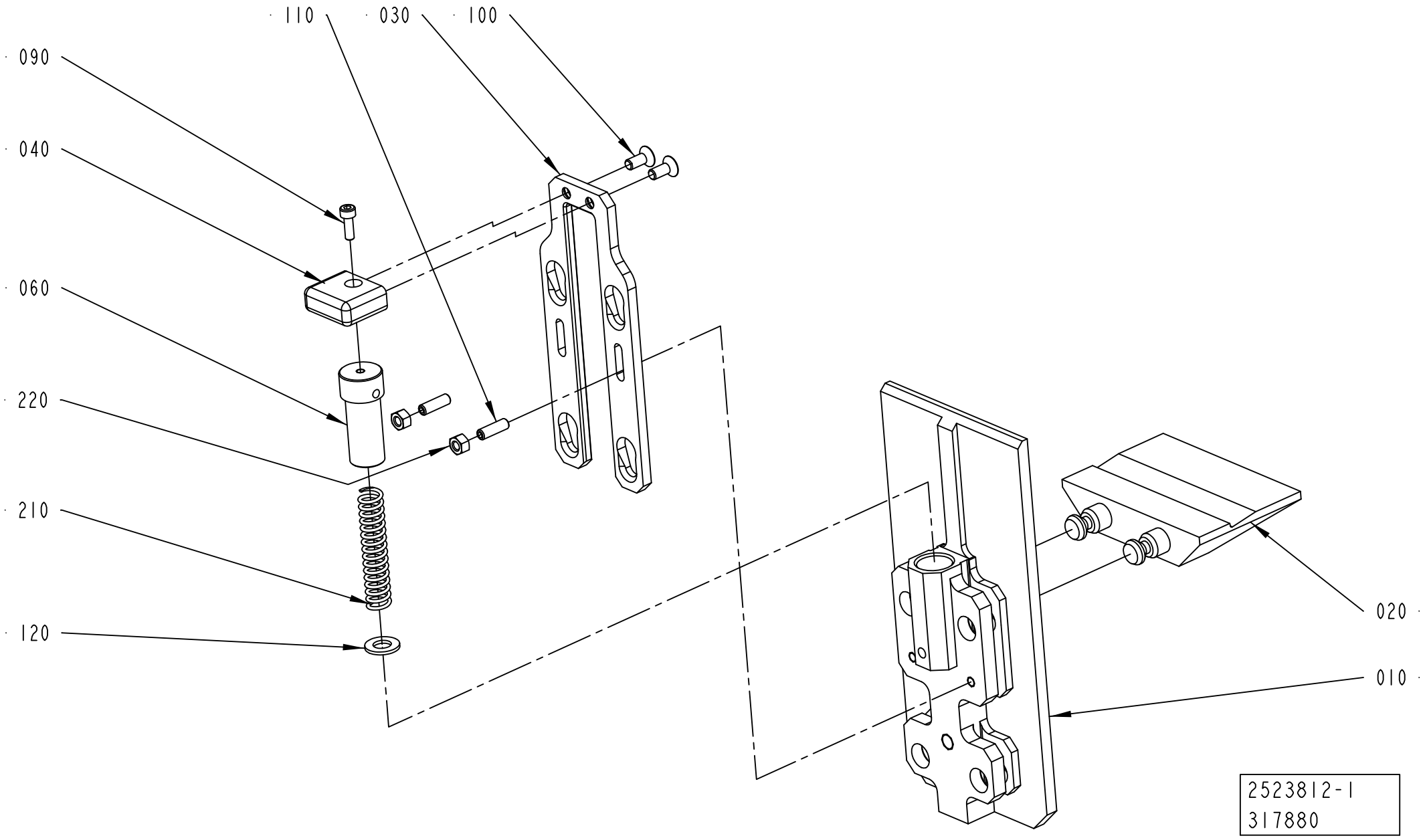
110
030
100
090
040
060
220
210
120
020
010
2523812-1
317880

ECM: 389636 - 20090701
Group number: 2523812-0100
Assembly Drawing: 2523812-1_1_AC

This list covers pages from 5-84 to 5-89

Pos	Part No	UN	Qty	Description	Page No
TPA 0750SQ (See drawing on page: 5-86)					
010	2658242-0000		1	FLAP	
020	2663373-0000		1	BOTTOM	
030	2658241-0000		1	SLIDE	
110	312318-0329		2	SCREW ISO4029 M5X16 A4	
200	90157-0021		1	LOCKING FLUID LOCTITE 270	
220	312605-0314		2	HEXAGON NUT, M6M M5 A280	
TPA 1000SQ (See drawing on page: 5-86)					
010	2658242-0000		1	FLAP	
020	2658240-0000		1	BOTTOM	
030	2658241-0000		1	SLIDE	
110	312318-0329		2	SCREW ISO4029 M5X16 A4	
200	90157-0021		1	LOCKING FLUID LOCTITE 270	
220	312605-0314		2	HEXAGON NUT, M6M M5 A280	
0500B NODIMC, 1000B NODIMC (See drawing on page: 5-84)					
010	2520170-0000		1	FLAP	
020	2629336-0000		1	BOTTOM	
030	2520168-0000		1	SLIDE	
110	312318-0329		2	SCREW ISO4029 M5X16 A4	
TBA 0200B, TBA 0250B, TBA 0330S (See drawing on page: 5-88)					
010	2603488-0000		1	FLAP	
020	2603489-0000		1	BOTTOM	
030	2603490-0000		1	SLIDE	
110	312318-0331		2	SCREW ISO4029 M5X20 A4	
220	312605-0314		2	HEXAGON NUT, M6M M5 A280	
TBA 0200M, TBA 0250S (See drawing on page: 5-84)					
010	2636399-0000		1	FLAP	
020	2636400-0000		1	BOTTOM	
030	2636401-0000		1	SLIDE	
110	312318-0331		2	SCREW ISO4029 M5X20 A4	
220	312605-0314		2	HEXAGON NUT, M6M M5 A280	
TBA 0200SQ, TBA 0250SQ (See drawing on page: 5-84)					
010	2668221-0000		1	FLAP	
020	2668220-0000		1	BOTTOM	
030	2668222-0000		1	SLIDE	
110	312318-0329		2	SCREW ISO4029 M5X16 A4	
220	312605-0314		2	HEXAGON NUT, M6M M5 A280	
TBA 0500B, TBA 1000B (See drawing on page: 5-84)					
010	2520170-0000		1	FLAP	
020	2629336-0000		1	BOTTOM	
030	2520168-0000		1	SLIDE	
110	312318-0329		2	SCREW ISO4029 M5X16 A4	
220	312605-0314		2	HEXAGON NUT, M6M M5 A280	
TBA 0500SQ, TBA 1000SQ, 1000SQ NODIMC, 0500SQ NODIMC (See drawing on page: 5-84)					
010	2553615-0000		1	FLAP	
020	2796652-0000		1	BOTTOM	
030	2553617-0000		1	SLIDE	
110	312318-0329		2	SCREW ISO4029 M5X16 A4	
220	312605-0314		2	HEXAGON NUT, M6M M5 A280	
TPA 0250SQ, TPA 0200SQ (See drawing on page: 5-84)					
010	2862749-0000		1	FLAP	
020	2674241-0000		1	BOTTOM	
030	2674239-0000		1	SLIDE	
110	312318-0329		2	SCREW ISO4029 M5X16 A4	
220	312605-0314		2	HEXAGON NUT, M6M M5 A280	
Common Parts					
040	2526563-0000		1	HANDLE	
060	2526567-0000		1	CYLINDER	
090	312115-0291		1	SCREW ISO4762 M4X12 A4 80	
100	312155-0327		2	SCREW DIN 7991 MF6S M5X12 A4 70	
120	315105-0165		1	WASHER BRB 8,4X16 RFR	
210	90459-0969		1	COMP. SPRING A D22430, 1,6X11,6X58,5	

Machine Type | Group Description | Used-In | Group Number | Page No

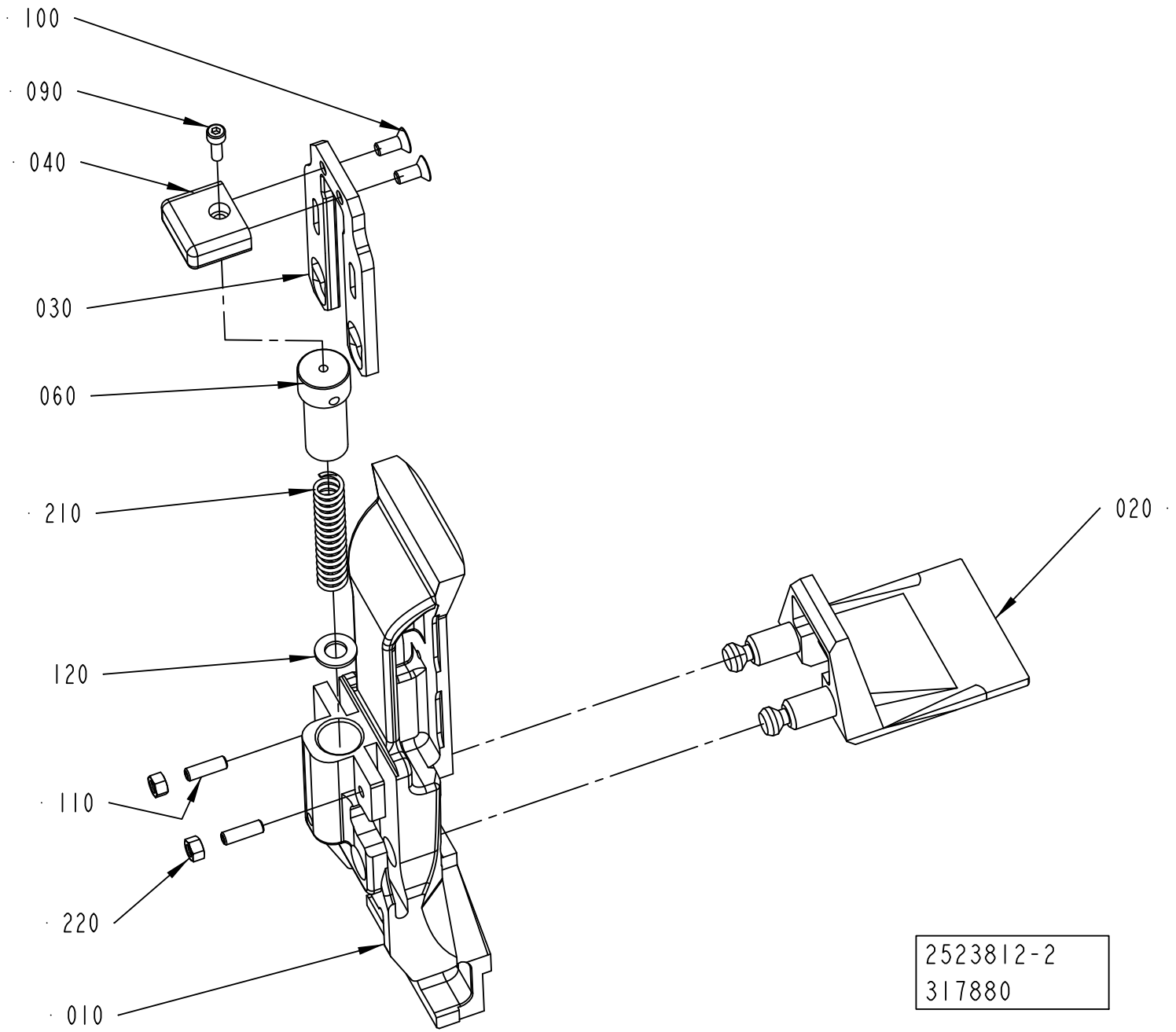
100
090
040
030
060
210
020
120
110
220
010
2523812-2
317880

ECM: 389636 - 20090701
Group number: 2523812-0100
Assembly Drawing: 2523812-2_1_AB

This list covers pages from 5-84 to 5-89

Pos	Part No	UN	Qty	Description	Page No
TPA 0750SQ (See drawing on page: 5-86)					
010	2658242-0000		1	FLAP	
020	2663373-0000		1	BOTTOM	
030	2658241-0000		1	SLIDE	
110	312318-0329		2	SCREW ISO4029 M5X16 A4	
200	90157-0021		1	LOCKING FLUID LOCTITE 270	
220	312605-0314		2	HEXAGON NUT, M6M M5 A280	
TPA 1000SQ (See drawing on page: 5-86)					
010	2658242-0000		1	FLAP	
020	2658240-0000		1	BOTTOM	
030	2658241-0000		1	SLIDE	
110	312318-0329		2	SCREW ISO4029 M5X16 A4	
200	90157-0021		1	LOCKING FLUID LOCTITE 270	
220	312605-0314		2	HEXAGON NUT, M6M M5 A280	
0500B NODIMC, 1000B NODIMC (See drawing on page: 5-84)					
010	2520170-0000		1	FLAP	
020	2629336-0000		1	BOTTOM	
030	2520168-0000		1	SLIDE	
110	312318-0329		2	SCREW ISO4029 M5X16 A4	
TBA 0200B, TBA 0250B, TBA 0330S (See drawing on page: 5-88)					
010	2603488-0000		1	FLAP	
020	2603489-0000		1	BOTTOM	
030	2603490-0000		1	SLIDE	
110	312318-0331		2	SCREW ISO4029 M5X20 A4	
220	312605-0314		2	HEXAGON NUT, M6M M5 A280	
TBA 0200M, TBA 0250S (See drawing on page: 5-84)					
010	2636399-0000		1	FLAP	
020	2636400-0000		1	BOTTOM	
030	2636401-0000		1	SLIDE	
110	312318-0331		2	SCREW ISO4029 M5X20 A4	
220	312605-0314		2	HEXAGON NUT, M6M M5 A280	
TBA 0200SQ, TBA 0250SQ (See drawing on page: 5-84)					
010	2668221-0000		1	FLAP	
020	2668220-0000		1	BOTTOM	
030	2668222-0000		1	SLIDE	
110	312318-0329		2	SCREW ISO4029 M5X16 A4	
220	312605-0314		2	HEXAGON NUT, M6M M5 A280	
TBA 0500B, TBA 1000B (See drawing on page: 5-84)					
010	2520170-0000		1	FLAP	
020	2629336-0000		1	BOTTOM	
030	2520168-0000		1	SLIDE	
110	312318-0329		2	SCREW ISO4029 M5X16 A4	
220	312605-0314		2	HEXAGON NUT, M6M M5 A280	
TBA 0500SQ, TBA 1000SQ, 1000SQ NODIMC, 0500SQ NODIMC (See drawing on page: 5-84)					
010	2553615-0000		1	FLAP	
020	2796652-0000		1	BOTTOM	
030	2553617-0000		1	SLIDE	
110	312318-0329		2	SCREW ISO4029 M5X16 A4	
220	312605-0314		2	HEXAGON NUT, M6M M5 A280	
TPA 0250SQ, TPA 0200SQ (See drawing on page: 5-84)					
010	2862749-0000		1	FLAP	
020	2674241-0000		1	BOTTOM	
030	2674239-0000		1	SLIDE	
110	312318-0329		2	SCREW ISO4029 M5X16 A4	
220	312605-0314		2	HEXAGON NUT, M6M M5 A280	
Common Parts					
040	2526563-0000		1	HANDLE	
060	2526567-0000		1	CYLINDER	
090	312115-0291		1	SCREW ISO4762 M4X12 A4 80	
100	312155-0327		2	SCREW DIN 7991 MF6S M5X12 A4 70	
120	315105-0165		1	WASHER BRB 8,4X16 RFR	
210	90459-0969		1	COMP. SPRING A D22430, 1,6X11,6X58,5	

Machine Type | Group Description | Used-In | Group Number | Page No

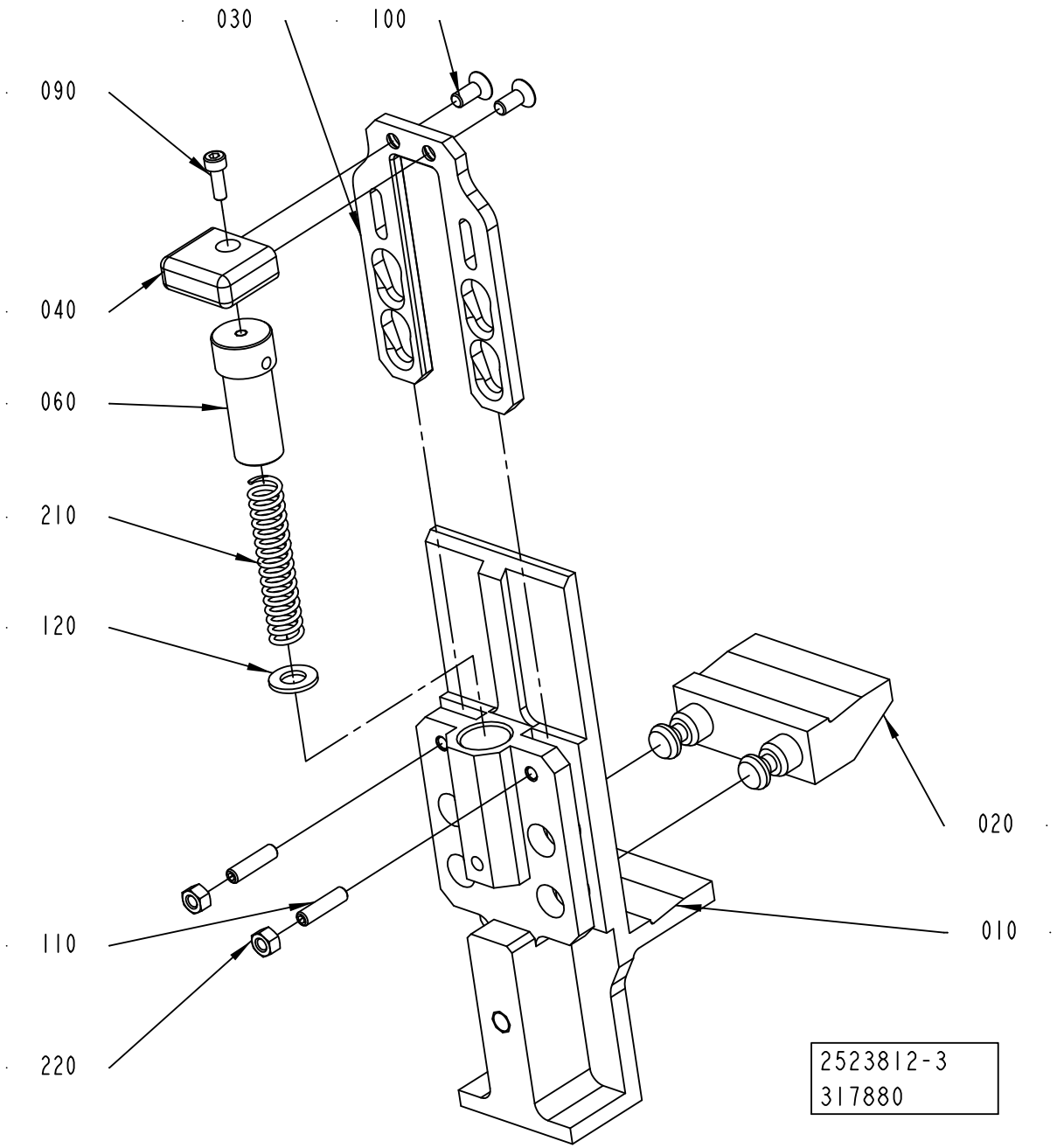
030
100
090
040
060
210
120
020
110
010
220
2523812-3
317880

ECM: 389636 - 20090701
Group number: 2523812-0100
Assembly Drawing: 2523812-3_1_AA

This list covers pages from 5-84 to 5-89

Pos	Part No	UN	Qty	Description	Page No
TPA 0750SQ (See drawing on page: 5-86)					
010	2658242-0000		1	FLAP	
020	2663373-0000		1	BOTTOM	
030	2658241-0000		1	SLIDE	
110	312318-0329		2	SCREW ISO4029 M5X16 A4	
200	90157-0021		1	LOCKING FLUID LOCTITE 270	
220	312605-0314		2	HEXAGON NUT, M6M M5 A280	
TPA 1000SQ (See drawing on page: 5-86)					
010	2658242-0000		1	FLAP	
020	2658240-0000		1	BOTTOM	
030	2658241-0000		1	SLIDE	
110	312318-0329		2	SCREW ISO4029 M5X16 A4	
200	90157-0021		1	LOCKING FLUID LOCTITE 270	
220	312605-0314		2	HEXAGON NUT, M6M M5 A280	
0500B NODIMC, 1000B NODIMC (See drawing on page: 5-84)					
010	2520170-0000		1	FLAP	
020	2629336-0000		1	BOTTOM	
030	2520168-0000		1	SLIDE	
110	312318-0329		2	SCREW ISO4029 M5X16 A4	
TBA 0200B, TBA 0250B, TBA 0330S (See drawing on page: 5-88)					
010	2603488-0000		1	FLAP	
020	2603489-0000		1	BOTTOM	
030	2603490-0000		1	SLIDE	
110	312318-0331		2	SCREW ISO4029 M5X20 A4	
220	312605-0314		2	HEXAGON NUT, M6M M5 A280	
TBA 0200M, TBA 0250S (See drawing on page: 5-84)					
010	2636399-0000		1	FLAP	
020	2636400-0000		1	BOTTOM	
030	2636401-0000		1	SLIDE	
110	312318-0331		2	SCREW ISO4029 M5X20 A4	
220	312605-0314		2	HEXAGON NUT, M6M M5 A280	
TBA 0200SQ, TBA 0250SQ (See drawing on page: 5-84)					
010	2668221-0000		1	FLAP	
020	2668220-0000		1	BOTTOM	
030	2668222-0000		1	SLIDE	
110	312318-0329		2	SCREW ISO4029 M5X16 A4	
220	312605-0314		2	HEXAGON NUT, M6M M5 A280	
TBA 0500B, TBA 1000B (See drawing on page: 5-84)					
010	2520170-0000		1	FLAP	
020	2629336-0000		1	BOTTOM	
030	2520168-0000		1	SLIDE	
110	312318-0329		2	SCREW ISO4029 M5X16 A4	
220	312605-0314		2	HEXAGON NUT, M6M M5 A280	
TBA 0500SQ, TBA 1000SQ, 1000SQ NODIMC, 0500SQ NODIMC (See drawing on page: 5-84)					
010	2553615-0000		1	FLAP	
020	2796652-0000		1	BOTTOM	
030	2553617-0000		1	SLIDE	
110	312318-0329		2	SCREW ISO4029 M5X16 A4	
220	312605-0314		2	HEXAGON NUT, M6M M5 A280	
TPA 0250SQ, TPA 0200SQ (See drawing on page: 5-84)					
010	2862749-0000		1	FLAP	
020	2674241-0000		1	BOTTOM	
030	2674239-0000		1	SLIDE	
110	312318-0329		2	SCREW ISO4029 M5X16 A4	
220	312605-0314		2	HEXAGON NUT, M6M M5 A280	
Common Parts					
040	2526563-0000		1	HANDLE	
060	2526567-0000		1	CYLINDER	
090	312115-0291		1	SCREW ISO4762 M4X12 A4 80	
100	312155-0327		2	SCREW DIN 7991 MF6S M5X12 A4 70	
120	315105-0165		1	WASHER BRB 8,4X16 RFR	
210	90459-0969		1	COMP. SPRING A D22430, 1,6X11,6X58,5	

Machine Type | Group Description | Used-In | Group Number | Page No

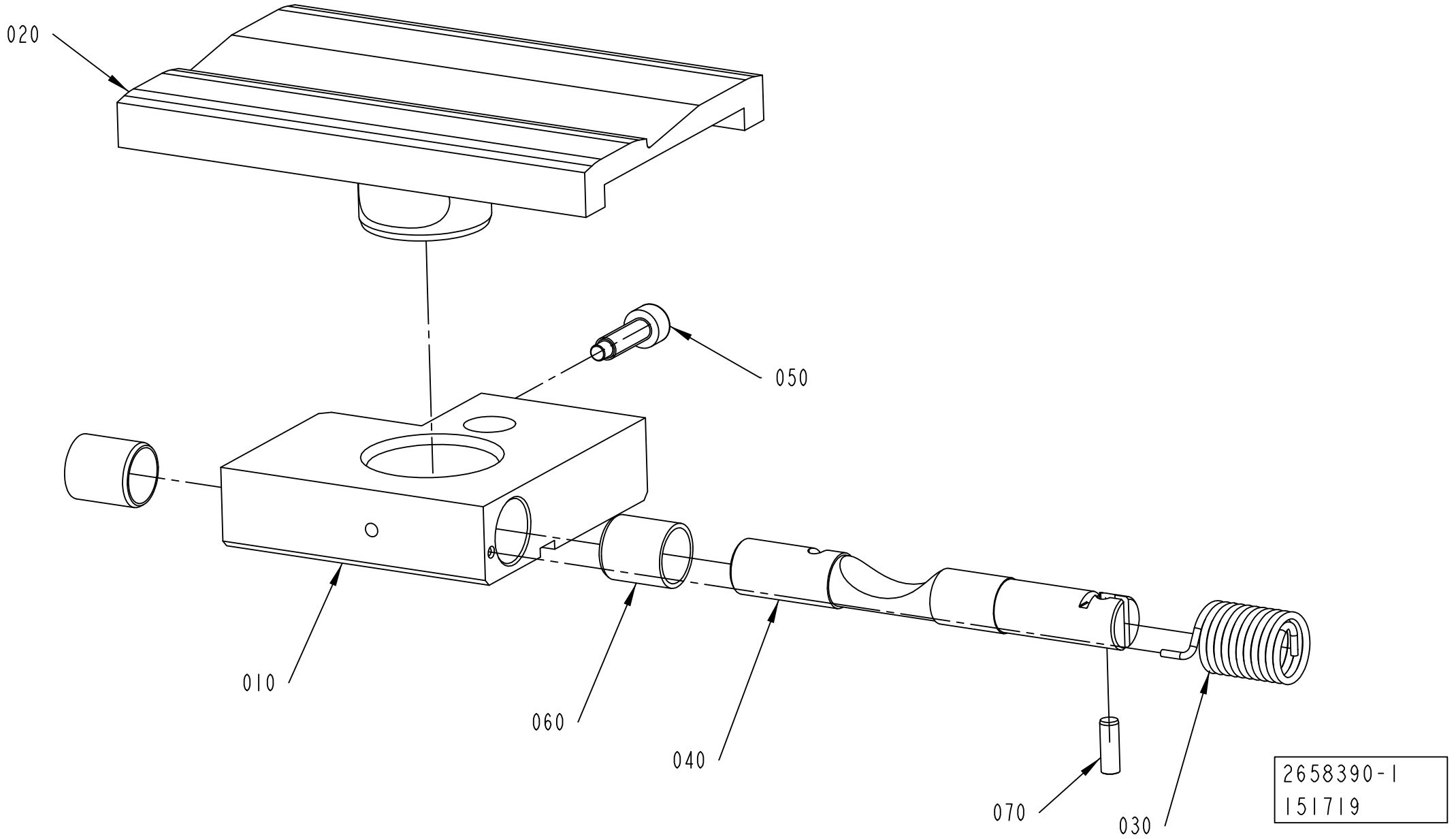
020
050
010
060
040
070
030
2658390-1
151719

ECM: 277421 - 20070102
Group number: 2658390-0100
Assembly Drawing: 2658390-1_1_AA

Pos	Part No	UN	Qty	Description	Page No
TBA 1400B					
020	2771494-0000		1	BOTTOM	
TBA 1890S					
020	2616218-0000		1	BOTTOM	
TBA 2000S					
020	2616219-0000		1	BOTTOM	
Common Parts					
010	2616217-0000		1	BOTTOM	
030	2650817-0000		1	SPRING	
040	2652888-0000		1	SHAFT	
050	2652889-0000		1	SCREW	
060	321138-0183		2	BUSHING, 12X14X15 MM	
070	311103-0268		1	PARALLEL PIN ISO 2338 4M6X12 A1	

Pos	Part No	UN	Qty	Description	Page No

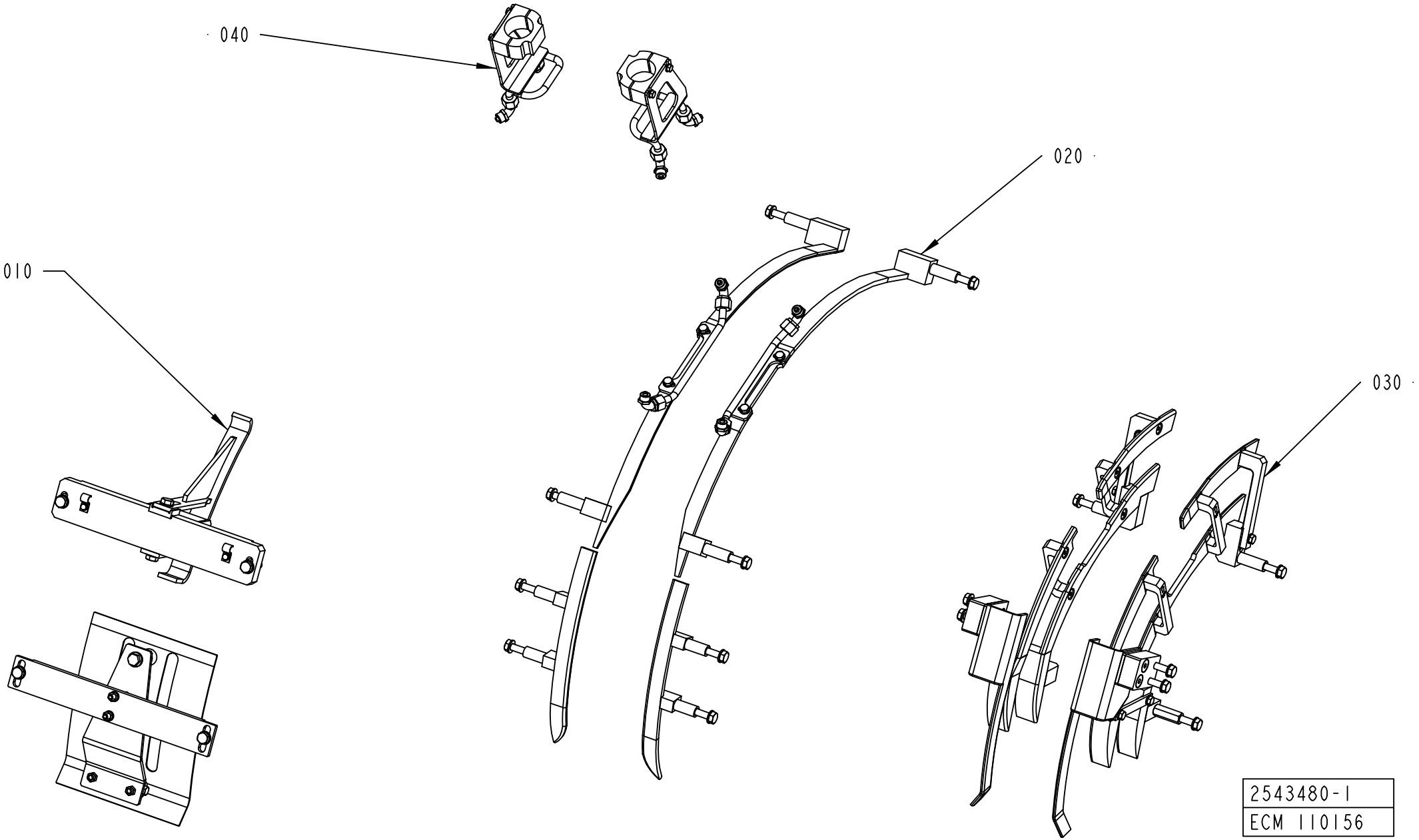
040
020
010
030
2543480-1
ECM 110156

ECM: 127231 - 20031103
Group number: 2543480-0100
Assembly Drawing: 2543480-1_1_AA

Pos	Part No	UN	Qty	Description	Page No
-					
010	2543481-0100		1	TOP SECTION	**5-95, 5-97, 5-99, 5-101, 5-103**
020	2543482-0100		1	TOP RAIL	**5-105, 5-107, 5-109, 5-111, 5-113**
030	2603827-0100		1	FLAP GUIDE	**5-115, 5-117, 5-119, 5-121, 5-123, 5-125, 5-127, 5-129**
040	2603826-0100		1	FOLDING PART	**5-131, 5-133, 5-135**

Pos	Part No	UN	Qty	Description	Page No

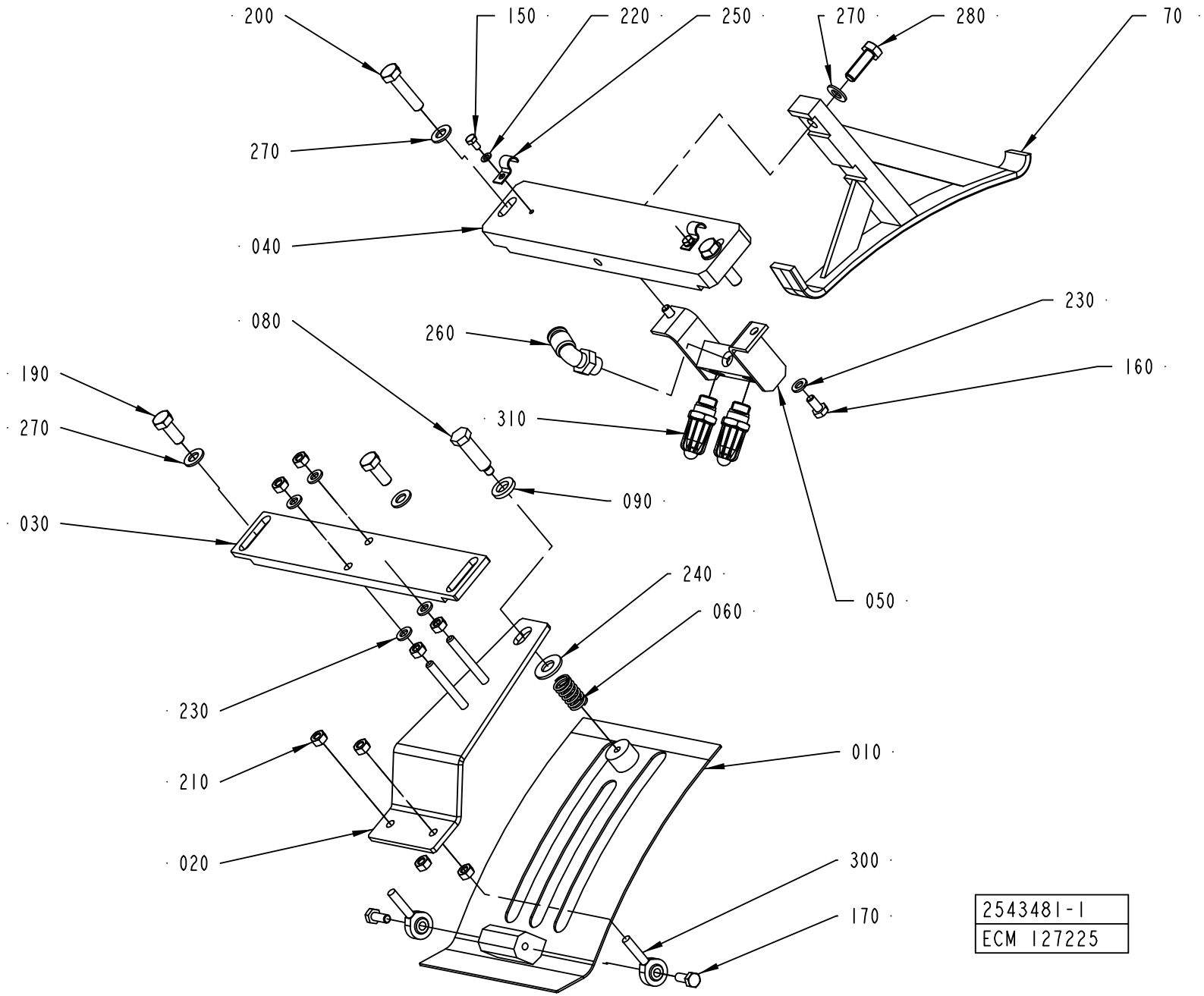
200
150
220
250
270
280
70
270
040
080
260
230
160
190
270
310
090
030
240
060
050
230
210
010
020
300
170
2543481-1
ECM 127225

Pos	Part No	UN	Qty	Description	Page No
TBA 0200B, TBA 0250B, TBA 0330S (See drawing on page: 5-98)					
010	1317211-0000		1	COVERING PLATE	
020	1317213-0000		1	ADJUSTING PLATE	
030	1144975-0000		1	ATTACHMENT PLATE	
040	1144902-0000		1	SUPPORT	
050	1349087-0000		1	DISTRIBUTOR	
070	2552022-0000		1	GUIDE	
100	2553284-0000		1	BLOCK	
150	312105-0287		2	SCREW M6S ISO 4017 M4X8 A470	
160	312105-0366		2	SCREW M6S ISO 4017 M6X12 A480	
190	312105-0451		2	SCREW M6S ISO 4017 M8X20 A480	
200	312105-0457		2	SCREW M6S ISO 4014 M8X35 A480	
220	315105-0136		2	WASHER BRB 4,3X8 RFR	
230	315105-0153		6	WASHER BRB 6,4X12 RFR	
250	90165-0057		2	PIPE CLIP FOR TUBE D=6 MM	
260	90458-2958		1	ELBOW PIPE JOINT, EXT.THREAD, D=8MM-G1/4	
270	315105-0165		6	WASHER BRB 8,4X16 RFR	
310	90424-0068		1	AIR NOZZLE, G1/4, MOD. 216 BSP	
TBA 0200M, TBA 0250S (See drawing on page: 5-100)					
010	1317211-0000		1	COVERING PLATE	
020	1317213-0000		1	ADJUSTING PLATE	
030	1144975-0000		1	ATTACHMENT PLATE	
040	1144902-0000		1	SUPPORT	
070	2555637-0000		1	GUIDE	
150	312105-0287		2	SCREW M6S ISO 4017 M4X8 A470	
190	312105-0451		4	SCREW M6S ISO 4017 M8X20 A480	
200	312105-0457		2	SCREW M6S ISO 4014 M8X35 A480	
220	315105-0136		2	WASHER BRB 4,3X8 RFR	
230	315105-0153		4	WASHER BRB 6,4X12 RFR	
250	90165-0057		2	PIPE CLIP FOR TUBE D=6 MM	
270	315105-0165		6	WASHER BRB 8,4X16 RFR	
TBA 0200SQ, TPA 0250SQ, TPA 0200SQ, TBA 0250SQ (See drawing on page: 5-98)					
010	1317211-0000		1	COVERING PLATE	
020	1317213-0000		1	ADJUSTING PLATE	
030	1144975-0000		1	ATTACHMENT PLATE	
040	2647111-0000		1	SUPPORT	
070	2668243-0000		1	GUIDE	
100	2668242-0000		1	BLOCK	
150	312105-0287		2	SCREW M6S ISO 4017 M4X8 A470	
190	312105-0451		2	SCREW M6S ISO 4017 M8X20 A480	
200	312105-0457		2	SCREW M6S ISO 4014 M8X35 A480	
220	315105-0136		2	WASHER BRB 4,3X8 RFR	
230	315105-0153		4	WASHER BRB 6,4X12 RFR	
250	90165-0057		2	PIPE CLIP FOR TUBE D=6 MM	
270	315105-0165		6	WASHER BRB 8,4X16 RFR	
TBA 0500B, TBA 1000B (See drawing on page: 5-94)					
010	1144941-0000		1	COVERING PLATE	
020	1144974-0000		1	ADJUSTING PLATE	
030	1144975-0000		1	ATTACHMENT PLATE	
040	1144902-0000		1	SUPPORT	
050	1285014-0000		1	DISTRIBUTOR	
070	2609372-0000		1	GUIDE	
150	312105-0287		2	SCREW M6S ISO 4017 M4X8 A470	
160	312105-0366		2	SCREW M6S ISO 4017 M6X12 A480	
180	312105-0449		1	SCREW M6S ISO 4017 M8X16 A480	
190	312105-0451		2	SCREW M6S ISO 4017 M8X20 A480	
200	312105-0457		2	SCREW M6S ISO 4014 M8X35 A480	
220	315105-0136		2	WASHER BRB 4,3X8 RFR	
230	315105-0153		6	WASHER BRB 6,4X12 RFR	
250	90165-0057		2	PIPE CLIP FOR TUBE D=6 MM	
260	90458-2958		1	ELBOW PIPE JOINT, EXT.THREAD, D=8MM-G1/4	
270	315105-0165		5	WASHER BRB 8,4X16 RFR	
280	312105-0453		1	SCREW M6S ISO 4017 M8X25 A480	
310	90424-0068		2	AIR NOZZLE, G1/4, MOD. 216 BSP	
TBA 0500SQ, TBA 1000SQ (See drawing on page: 5-102)					
010	1144941-0000		1	COVERING PLATE	
020	1144974-0000		1	ADJUSTING PLATE	
030	1144975-0000		1	ATTACHMENT PLATE	
190	312105-0451		2	SCREW M6S ISO 4017 M8X20 A480	
230	315105-0153		6	WASHER BRB 6,4X12 RFR	
270	315105-0165		2	WASHER BRB 8,4X16 RFR	
TBA 1890S, TBA 2000S, TBA 1400B (See drawing on page: 5-96)					
010	1548612-0000		1	COVERING PLATE	
020	1144974-0000		1	ADJUSTING PLATE	
030	1285299-0000		1	BRACKET	
040	1334480-0000		1	SUPPORT	
070	1347057-0000		1	GUIDE	
150	312105-0287		4	SCREW M6S ISO 4017 M4X8 A470	
180	312105-0449		1	SCREW M6S ISO 4017 M8X16 A480	
190	312105-0453		2	SCREW M6S ISO 4017 M8X25 A480	
200	312105-0457		2	SCREW M6S ISO 4014 M8X35 A480	
220	315105-0136		4	WASHER BRB 4,3X8 RFR	
230	315105-0153		4	WASHER BRB 6,4X12 RFR	
250	316810-0106		4	PIPE CLIP FOR TUBE D=8 MM	

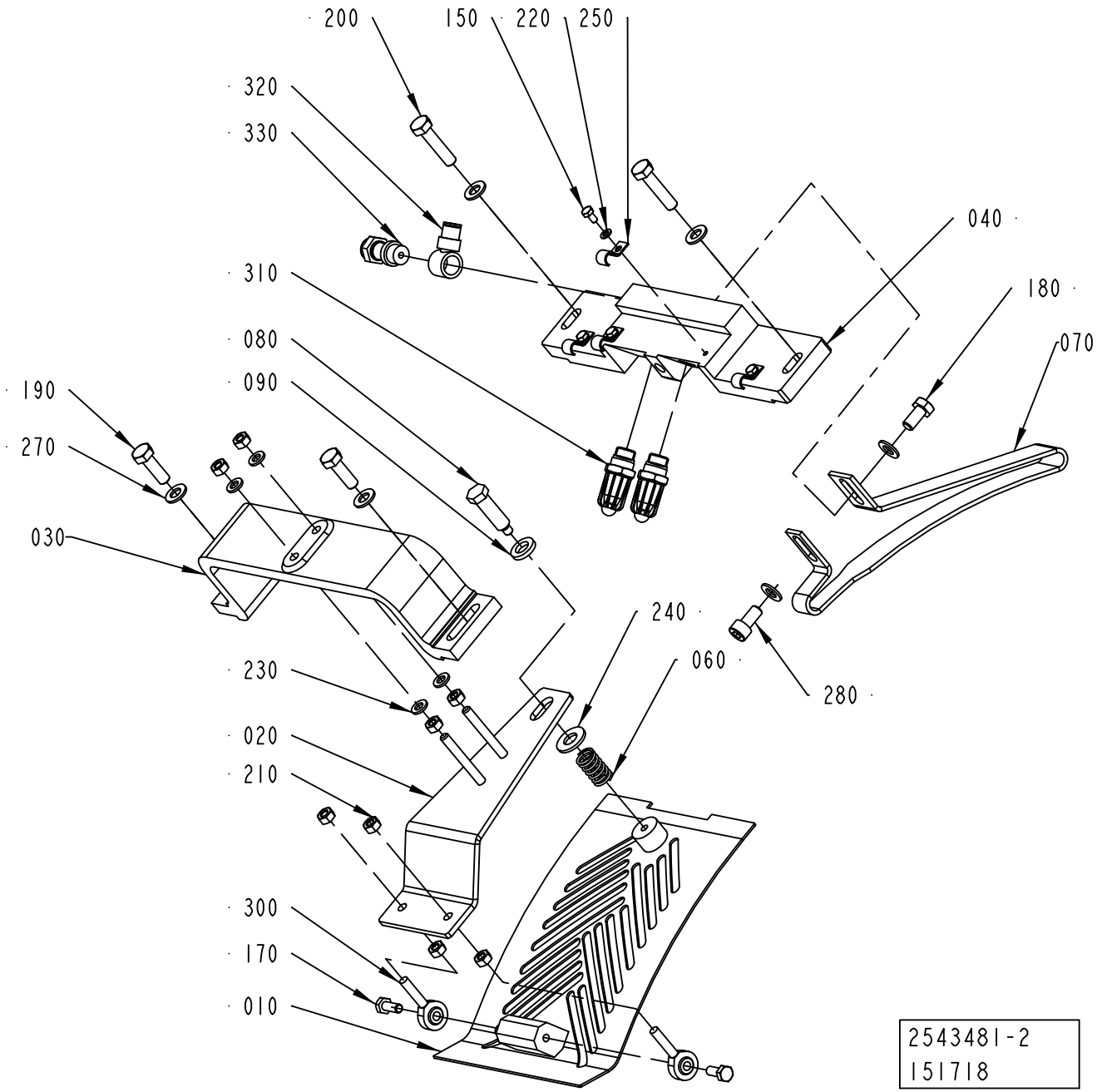
200
150
220
250
320
330
310
080
090
190
270
030
040
180
070
240
060
280
230
020
210
300
170
010
2543481-2
151718

Pos	Part No	UN	Qty	Description	Page No
TBA 1890S, TBA 2000S, TBA 1400B (Cont'd) (See drawing on page: 5-96)					
270	315105-0165		6	WASHER BRB 8,4X16 RFR	
280	312115-0449		1	SCREW ISO4762 M8X16 A4 80	
310	90424-0068		2	AIR NOZZLE, G1/4, MOD. 216 BSP	
320	342981-0122		1	BANJO CONNEC,RING,FOR PLAST.TUBE 8-G1/4"	
330	90235-0731		1	THROTTLE CHECK VALVE, G1/4", SCO-606-1/4	
TPA 1000SQ, TPA 0750SQ (See drawing on page: 5-96)					
010	2629303-0000		1	COVERING PLATE	
020	1144974-0000		1	ADJUSTING PLATE	
030	1285299-0000		1	BRACKET	
040	2647111-0000		1	SUPPORT	
070	2647112-0000		1	GUIDE	
150	312105-0287		2	SCREW M6S ISO 4017 M4X8 A470	
180	312105-0449		1	SCREW M6S ISO 4017 M8X16 A480	
190	312105-0453		2	SCREW M6S ISO 4017 M8X25 A480	
200	312105-0457		2	SCREW M6S ISO 4014 M8X35 A480	
220	315105-0136		2	WASHER BRB 4,3X8 RFR	
230	315105-0153		4	WASHER BRB 6,4X12 RFR	
250	90165-0057		2	PIPE CLIP FOR TUBE D=6 MM	
270	315105-0165		6	WASHER BRB 8,4X16 RFR	
280	312105-0449		1	SCREW M6S ISO 4017 M8X16 A480	
Common Parts					
060	90335-0036		1	COMP. SPRING 22450, 1,6X14,1X24	
080	1144976-0000		1	STOP SCREW	
090	1144979-0000		1	WASHER	
170	312105-0368		2	SCREW M6S ISO 4017 M6X16 A480	
210	312605-0316		8	HEXAGON NUT, M6M M6 A280	
240	315105-0173		1	WASHER BRB 10,5X22 RFR	
300	90115-0137		2	ROD END, ID=6 MM, M6X1	

Pos	Part No	UN	Qty	Description	Page No

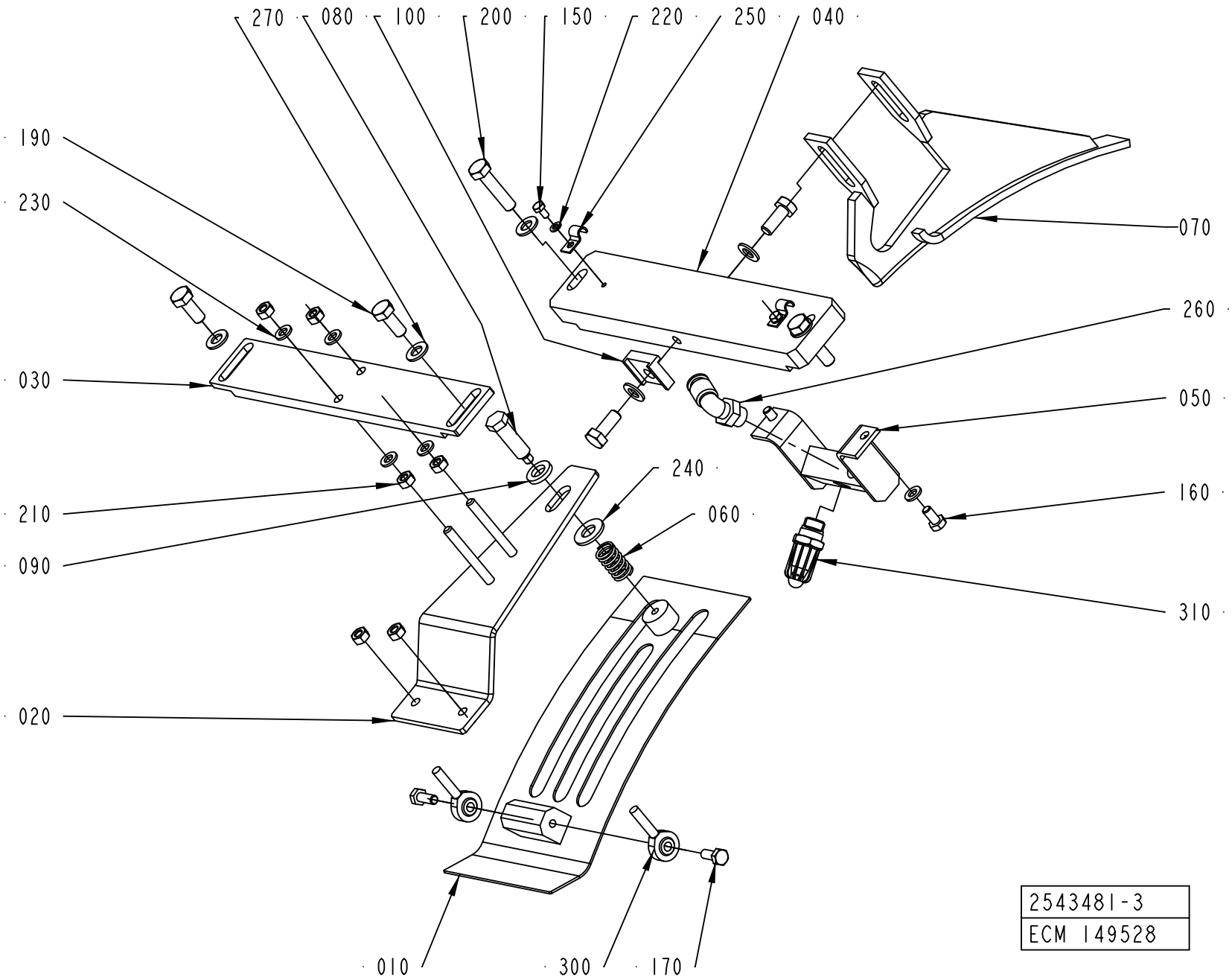
270
080
100
200
150
220
250
040
190
230
070
260
030
050
240
160
060
210
090
310
020
010
300
170
2543481-3
ECM 149528

Pos	Part No	UN	Qty	Description	Page No
SEE PREVIOUS LISTS PAGES: 5-95, 5-97.					

Pos	Part No	UN	Qty	Description	Page No

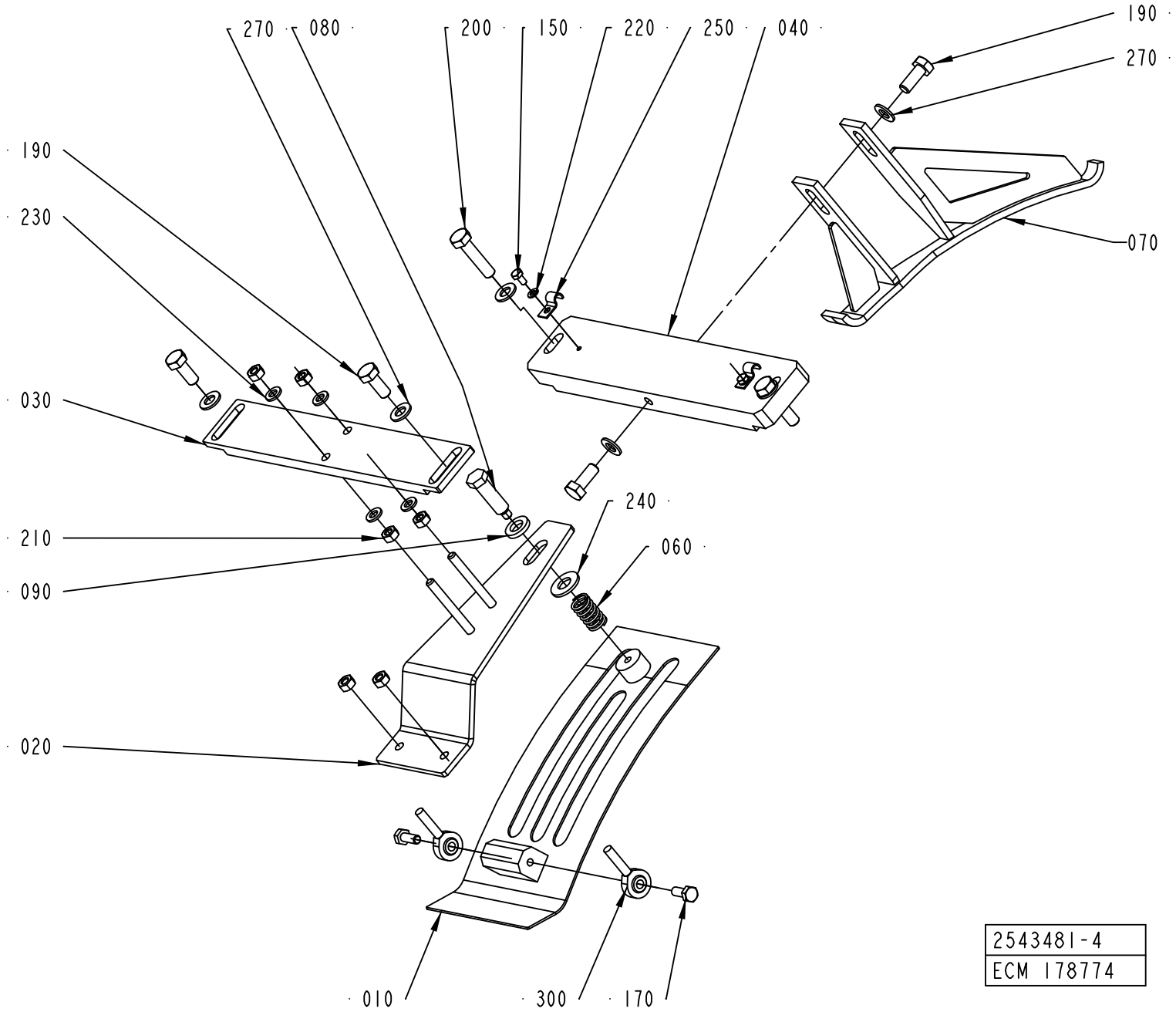
270
080
200
150
220
250
040
190
270
190
230
070
030
240
210
060
090
020
010
300
170
2543481-4
ECM 178774

Pos	Part No	UN	Qty	Description	Page No
SEE PREVIOUS LISTS PAGES: 5-95, 5-97.					

Pos	Part No	UN	Qty	Description	Page No

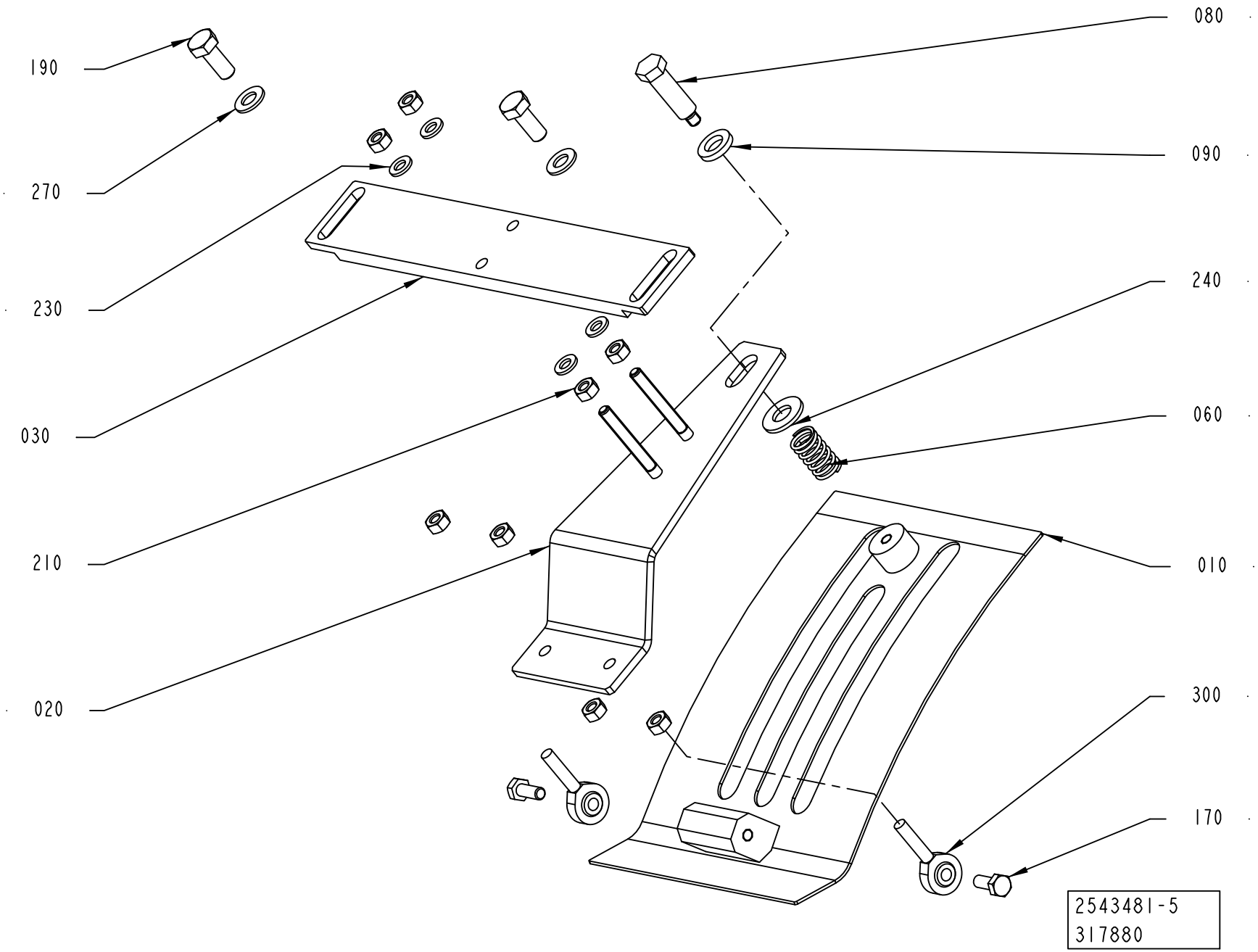
080
190
090
270
240
230
060
030
010
210
300
020
170
2543481-5
317880

Pos	Part No	UN	Qty	Description	Page No
SEE PREVIOUS LISTS PAGES: 5-95, 5-97.					

Pos	Part No	UN	Qty	Description	Page No

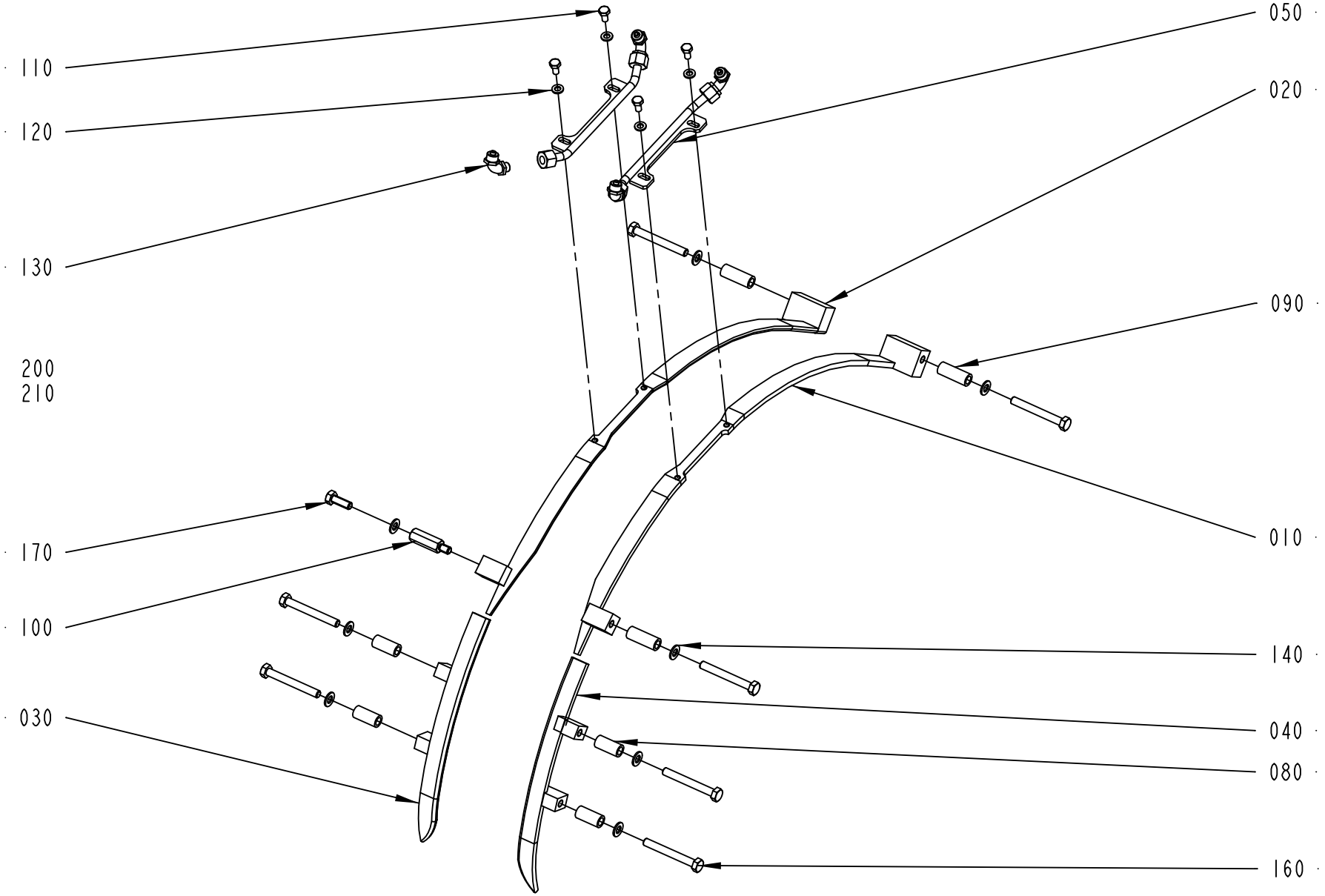

2543482-1
ECM 110156

ECM: 375437 - 20081215
Group number: 2543482-0100
Assembly Drawing: 2543482-1_1_AA

This list covers pages from 5-104 to 5-113

Pos	Part No	UN	Qty	Description	Page No
TBA 0200B, TBA 0250B, TBA 0330S (See drawing on page: 5-108)					
010	1144892-0000		1	GUIDE RIGHT	
020	1144893-0000		1	GUIDE LEFT	
030	2558704-0000		1	GUIDE UPPER R	
040	2558703-0000		1	GUIDE UPPER L	
050	2676815-0000		1	FOLDING BAR	
055	2676816-0000		1	FOLDING BAR	
060	1346340-0000		1	BRACKET	
070	1144555-0000		7	STUD SCREW	
075	1334523-0000		1	SUPPORT	
110	312105-0366		6	SCREW M6S ISO 4017 M6X12 A480	
120	315105-0153		6	WASHER BRB 6,4X12 RFR	
140	315105-0165		16	WASHER BRB 8,4X16 RFR	
150	312605-0318		16	HEXAGON NUT, M6M M8 A280	
TBA 0200M, TBA 0250S (See drawing on page: 5-108)					
010	1478926-0000		1	GUIDE RIGHT	
020	1478927-0000		1	GUIDE LEFT	
030	1539900-0000		1	RIGHT UPPER GUIDE	
040	1549614-0000		1	LEFT UPPER GUIDE	
050	2676815-0000		1	FOLDING BAR	
055	2676816-0000		1	FOLDING BAR	
060	1346340-0000		1	BRACKET	
070	1144555-0000		7	STUD SCREW	
075	1334523-0000		1	SUPPORT	
110	312105-0366		6	SCREW M6S ISO 4017 M6X12 A480	
120	315105-0153		6	WASHER BRB 6,4X12 RFR	
140	315105-0165		16	WASHER BRB 8,4X16 RFR	
150	312605-0318		16	HEXAGON NUT, M6M M8 A280	
TBA 0200SQ, TBA 0250SQ (See drawing on page: 5-110)					
010	1144892-0000		1	GUIDE RIGHT	
020	1144893-0000		1	GUIDE LEFT	
030	2558704-0000		1	GUIDE UPPER R	
040	2558703-0000		1	GUIDE UPPER L	
050	2676815-0000		1	FOLDING BAR	
055	2676816-0000		1	FOLDING BAR	
060	1346340-0000		1	BRACKET	
080	2750544-0000		4	SPACER	
090	1539898-0000		2	SPACER	
110	312105-0366		6	SCREW M6S ISO 4017 M6X12 A480	
120	315105-0153		6	WASHER BRB 6,4X12 RFR	
140	315105-0165		8	WASHER BRB 8,4X16 RFR	
160	312105-0467		6	SCREW M6S ISO 4014 M8X80 A480	
170	312105-0451		1	SCREW M6S ISO 4017 M8X20 A480	
175	312155-0449		2	SCREW DIN 7991 MF6S M8X16 A4 70	
180	2698299-0000		2	BRACKET	
190	312105-0455		1	SCREW M6S ISO 4017 M8X30 A480	
TBA 0500B, TBA 1000B (See drawing on page: 5-104)					
010	2520178-0000		1	GUIDE	
020	2520179-0000		1	GUIDE	
030	1539900-0000		1	RIGHT UPPER GUIDE	
040	1549614-0000		1	LEFT UPPER GUIDE	
050	2526575-0000		2	FOLDING BAR	
080	1334447-0000		4	SPACER	
090	2603663-0000		3	SPACER	
100	2555082-0000		1	SPACER SCREW	
110	312105-0366		4	SCREW M6S ISO 4017 M6X12 A480	
120	315105-0153		4	WASHER BRB 6,4X12 RFR	
140	315105-0165		8	WASHER BRB 8,4X16 RFR	
160	312105-0464		7	SCREW M6S ISO 4014 M8X65 A480	
170	312105-0452		1	SCREW M6S ISO 4017 M8X22 A480	
TBA 0500SQ, TBA 1000SQ (See drawing on page: 5-112)					
010	1144892-0000		1	GUIDE RIGHT	
020	1144893-0000		1	GUIDE LEFT	
030	1549411-0000		1	PACKAGE GUIDE	
040	1549406-0000		1	PACKAGE GUIDE	
050	2676815-0000		1	FOLDING BAR	
055	2676816-0000		1	FOLDING BAR	
060	1498161-0000		1	SUPPORT	
090	1499071-0000		6	SPACER	
110	312105-0366		6	SCREW M6S ISO 4017 M6X12 A480	
120	315105-0153		10	WASHER BRB 6,4X12 RFR	
140	315105-0165		8	WASHER BRB 8,4X16 RFR	
160	312105-0466		6	SCREW M6S ISO 4014 M8X75 A480	
250	312109-0374		4	SCREW M6S ISO 4017 M6X30 A480	
260	312105-0451		2	SCREW M6S ISO 4017 M8X20 A480	
270	2852009-0000		1	BRACKET	
TBA 1890S, TBA 2000S, TBA 1400B (See drawing on page: 5-106)					
010	1350424-0000		1	GUIDE RIGHT	
020	1350425-0000		1	GUIDE LEFT	
030	1334559-0000		1	GUIDE UPPER R	
040	1334560-0000		1	GUIDE UPPER L	
050	1350423-0000		2	FOLDING BAR	
080	1334447-0000		4	SPACER	
090	2752533-0000		4	SPACER	

Machine Type | Group Description | Used-In | Group Number | Page No

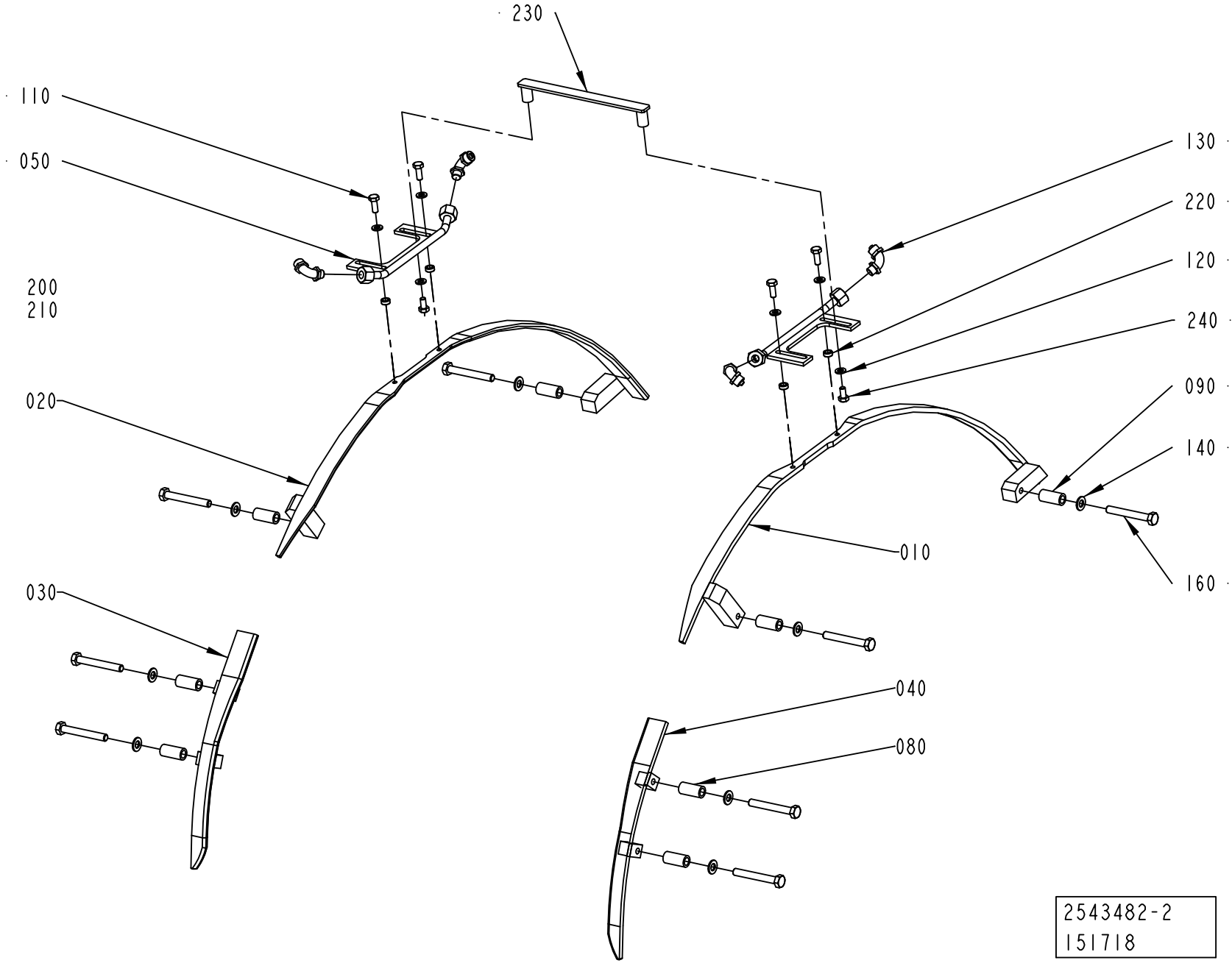
230
110
050
200
210
020
030
130
220
120
240
090
140
010
160
040
080
2543482-2
151718

Pos	Part No	UN	Qty	Description	Page No
TBA 1890S, TBA 2000S, TBA 1400B (Cont'd) (See drawing on page: 5-106)					
110	312105-0368		4	SCREW M6S ISO 4017 M6X16 A480	
120	315105-0153		6	WASHER BRB 6,4X12 RFR	
140	315105-0165		8	WASHER BRB 8,4X16 RFR	
160	312105-0463		8	SCREW M6S ISO 4014 M8X60 A480	
220	1282705-0000		4	SUPPORT	
230	1285267-0000		1	SUPPORT	
240	312105-0366		2	SCREW M6S ISO 4017 M6X12 A480	
TPA 0250SQ, TPA 0200SQ (See drawing on page: 5-110)					
010	1144892-0000		1	GUIDE RIGHT	
020	1144893-0000		1	GUIDE LEFT	
030	2735125-0000		1	GUIDE UPPER	
040	2735126-0000		1	GUIDE UPPER	
050	2676815-0000		1	FOLDING BAR	
055	2676816-0000		1	FOLDING BAR	
060	1346340-0000		1	BRACKET	
080	1558910-0000		4	SPACER	
090	1558526-0000		2	SPACER	
110	312105-0366		4	SCREW M6S ISO 4017 M6X12 A480	
120	315105-0153		6	WASHER BRB 6,4X12 RFR	
140	315105-0165		8	WASHER BRB 8,4X16 RFR	
160	312105-0469		6	SCREW M6S ISO 4014 M8X90 A480	
170	312105-0451		1	SCREW M6S ISO 4017 M8X20 A480	
175	312105-0449		2	SCREW M6S ISO 4017 M8X16 A480	
180	2698299-0000		2	BRACKET	
190	312105-0455		1	SCREW M6S ISO 4017 M8X30 A480	
TPA 1000SQ, TPA 0750SQ (See drawing on page: 5-106)					
010	2647120-0000		1	GUIDE	
020	2647119-0000		1	GUIDE	
030	2642178-0000		1	GUIDE UPPER	
040	2642177-0000		1	GUIDE UPPER	
050	1350423-0000		2	FOLDING BAR	
090	1539898-0000		8	SPACER	
110	312105-0368		4	SCREW M6S ISO 4017 M6X16 A480	
120	315105-0153		6	WASHER BRB 6,4X12 RFR	
140	315105-0165		8	WASHER BRB 8,4X16 RFR	
160	2541125-0000		8	SCREW	
220	1282705-0000		4	SUPPORT	
230	1346340-0000		1	BRACKET	
240	312105-0366		2	SCREW M6S ISO 4017 M6X12 A480	
Common Parts					
130	342931-0121		4	ELBOW 90 COUPL.,EXT.THREAD 8/6-G1/8"	
200	90166-0118	MM	1500	TUBE 8 MM PA BLACK	
210	352113-0102		10	CABLE TIE, BLACK 188X4,8 MM	

Machine Type | Group Description | Used-In | Group Number | Page No

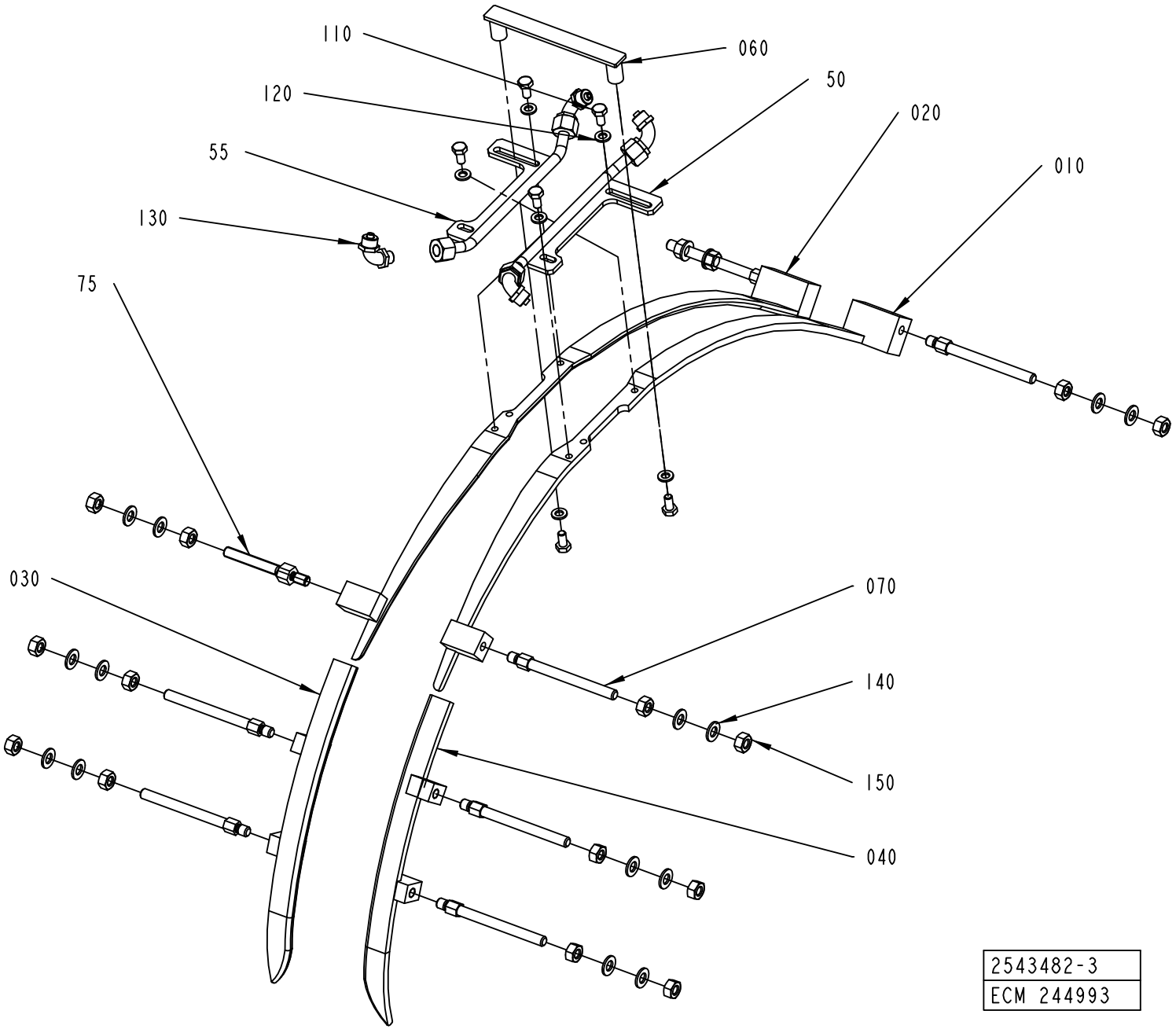
110
060
120
50
020
55
010
130
75
030
070
140
150
040
2543482-3
ECM 244993

ECM: 375437 - 20081215
Group number: 2543482-0100
Assembly Drawing: 2543482-3_1_AC

This list covers pages from 5-104 to 5-113

Pos	Part No	UN	Qty	Description	Page No
SEE PREVIOUS LISTS PAGES: 5-105, 5-107.					

Pos	Part No	UN	Qty	Description	Page No

Machine Type | Group Description | Used-In | Group Number | Page No

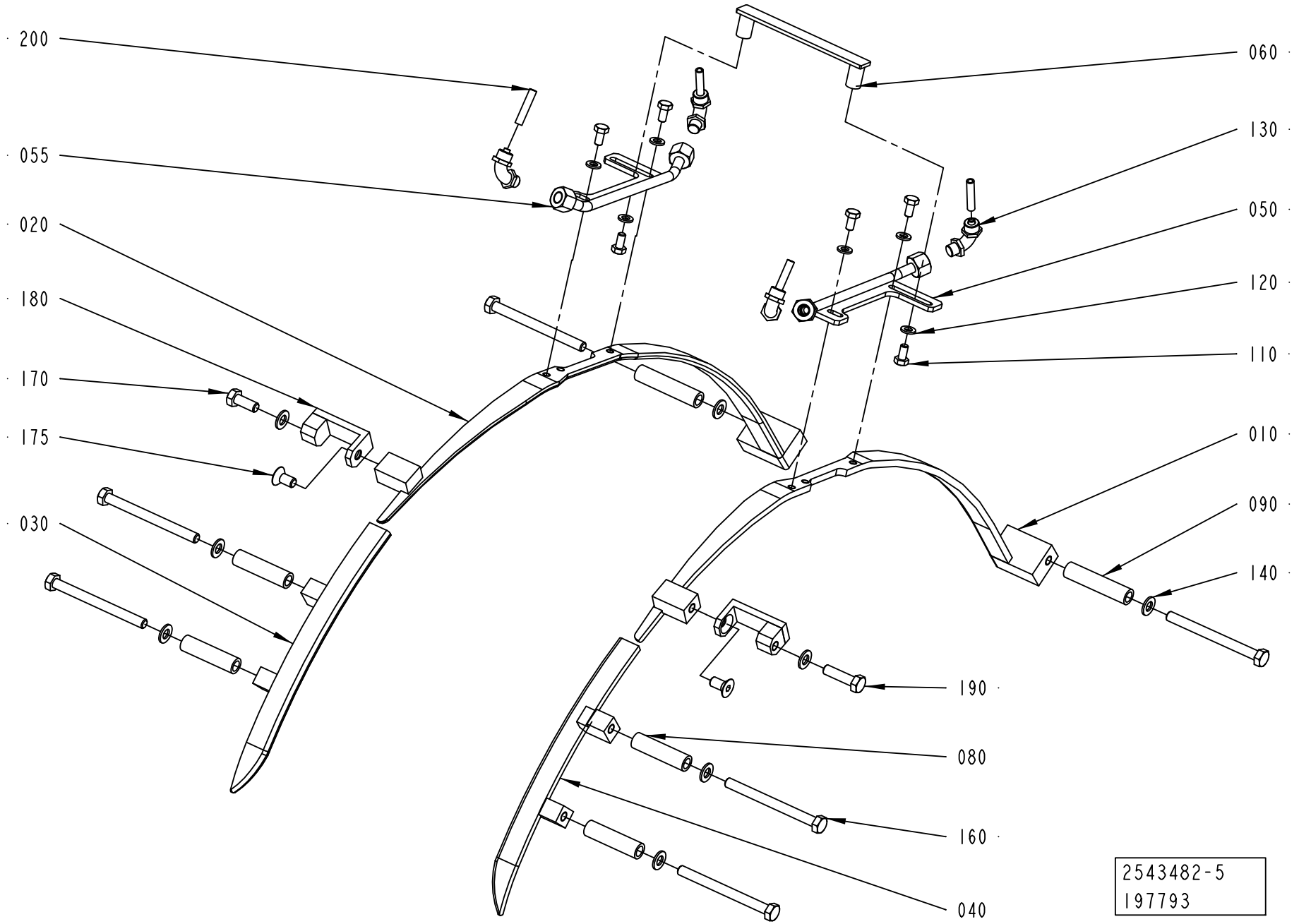
200
055
020
180
170
175
030
060
130
050
120
110
010
090
140
190
080
160
040
2543482-5
197793

ECM: 375437 - 20081215
Group number: 2543482-0100
Assembly Drawing: 2543482-5_1_AA

This list covers pages from 5-104 to 5-113

Pos	Part No	UN	Qty	Description	Page No
SEE PREVIOUS LISTS PAGES: 5-105, 5-107.					

Pos	Part No	UN	Qty	Description	Page No

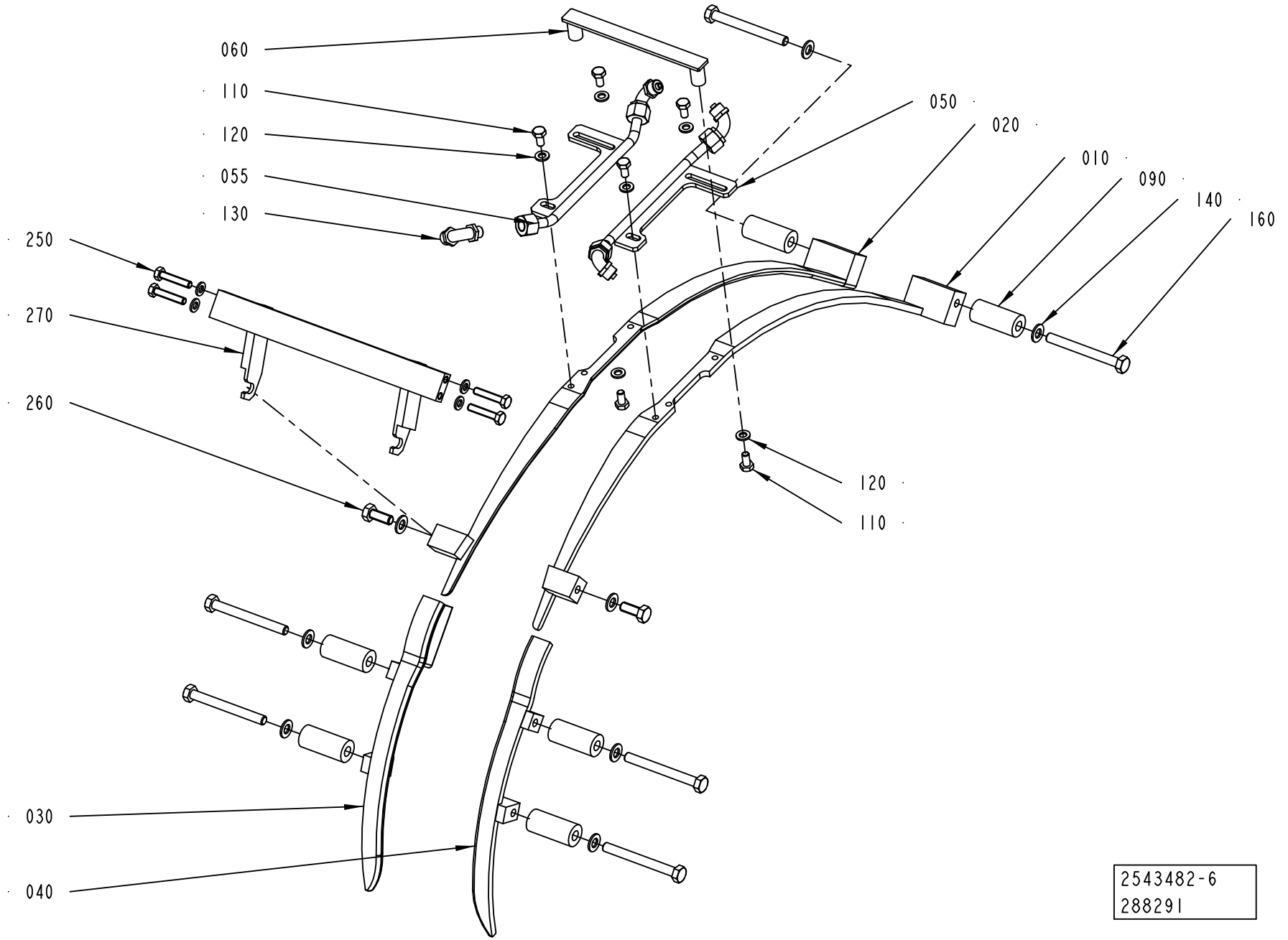
060
110
120
055
130
250
270
260
030
040
050
020
010
090
140
160
120
110
2543482-6
288291

ECM: 375437 - 20081215
Group number: 2543482-0100
Assembly Drawing: 2543482-6_1_AA

This list covers pages from 5-104 to 5-113

Pos	Part No	UN	Qty	Description	Page No

SEE PREVIOUS LISTS PAGES: 5-105, 5-107.

Pos	Part No	UN	Qty	Description	Page No

FLAP GUIDE

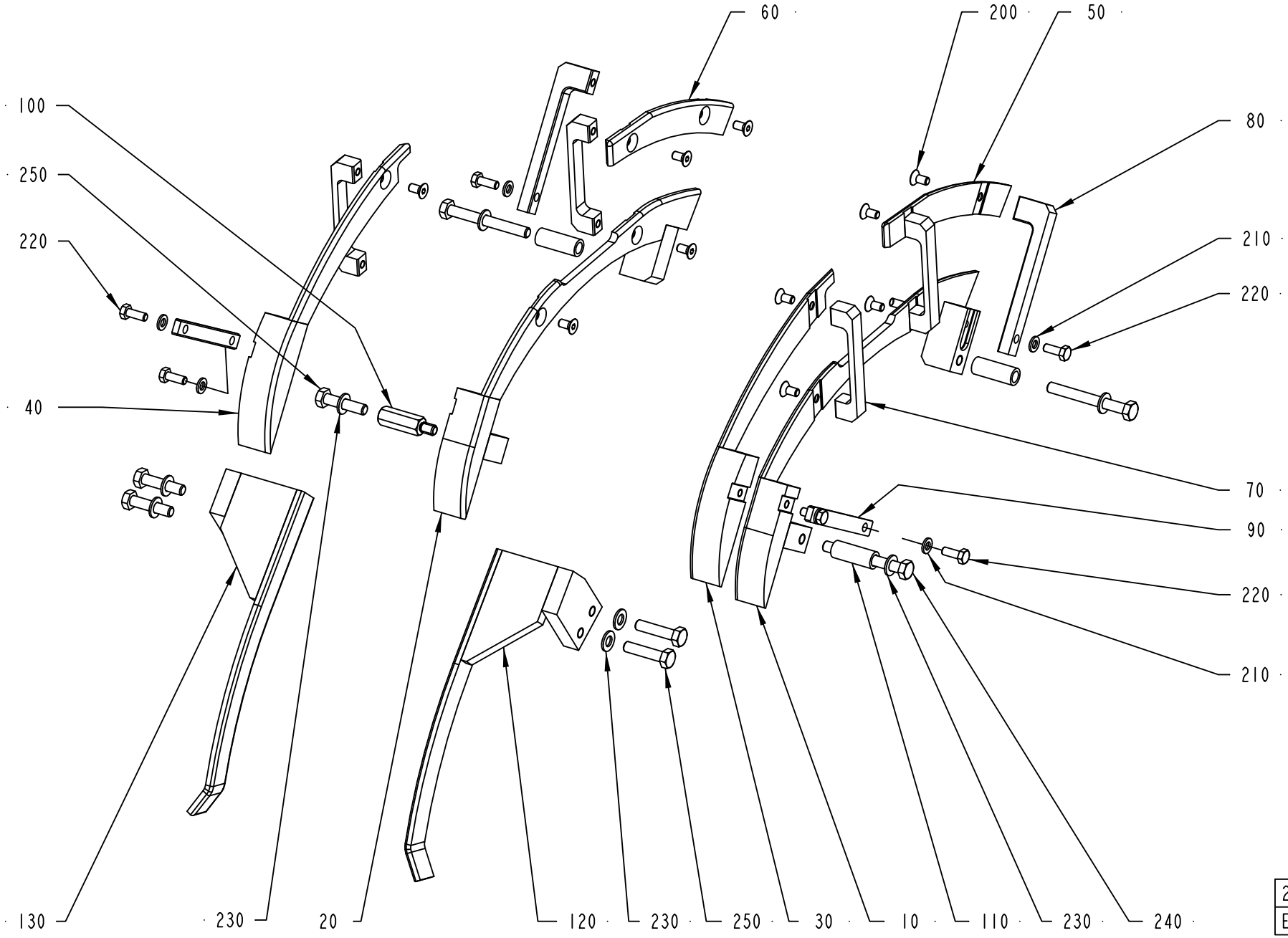

2603827-1
ECM 127225

ECM: 389640 - 20090701
Group number: 2603827-0100
Assembly Drawing: 2603827-1_1_AA

This list covers pages from 5-114 to 5-129

Pos	Part No	UN	Qty	Description	Page No
TBA 0200B, TBA 0250B, TBA 0330S (See drawing on page: 5-118)					
010	2595707-0000		1	FOLDING PART	
020	2601445-0000		1	FOLDING PART	
030	2595704-0000		1	FOLDING PART	
040	2601455-0000		1	FOLDING PART	
050	2595705-0000		1	FOLDING PART	
060	2601465-0000		1	FOLDING PART	
070	2595706-0000		8	BRACKET	
110	2599847-0000		3	SPACER	
120	1346344-0000		1	RAIL	
130	1346343-0000		1	RAIL	
140	2595708-0000		1	FOLDING PART	
150	2602592-0000		1	FOLDING PART	
160	2595709-0000		1	FOLDING PART	
170	2601464-0000		1	FOLDING PART	
180	2558127-0000		2	SPACER	
190	2664035-0000		1	SPACER SCREW	
210	315105-0153		24	WASHER BRB 6,4X12 RFR	
220	312105-0370		24	SCREW M6S ISO 4017 M6X20 A480	
230	315105-0165		8	WASHER BRB 8,4X16 RFR	
240	312105-0467		3	SCREW M6S ISO 4014 M8X80 A480	
250	312105-0457		4	SCREW M6S ISO 4014 M8X35 A480	
260	312155-0461		4	SCREW DIN 7991 MF6S M8X50A4 70	
270	312105-0455		1	SCREW M6S ISO 4017 M8X30 A480	
TBA 0200M, TBA 0250S (See drawing on page: 5-122)					
010	2595707-0000		1	FOLDING PART	
020	2601445-0000		1	FOLDING PART	
030	2649130-0000		1	GUIDE RAIL	
040	2649132-0000		1	GUIDE RAIL	
050	2649131-0000		1	GUIDE RAIL	
060	2649133-0000		1	GUIDE RAIL	
070	2649134-0000		8	BRACKET	
110	2804857-0000		4	SPACER SCREW	
120	1346344-0000		1	RAIL	
130	1346343-0000		1	RAIL	
180	2649139-0000		2	SPACER	
210	315105-0153		16	WASHER BRB 6,4X12 RFR	
220	312105-0370		16	SCREW M6S ISO 4017 M6X20 A480	
230	315105-0165		8	WASHER BRB 8,4X16 RFR	
240	312105-0457		4	SCREW M6S ISO 4014 M8X35 A480	
250	312105-0457		4	SCREW M6S ISO 4014 M8X35 A480	
260	312155-0461		4	SCREW DIN 7991 MF6S M8X50A4 70	
TBA 0200SQ, TBA 0250SQ (See drawing on page: 5-124)					
010	2668248-0000		1	FOLDING PART	
020	2668251-0000		1	FOLDING PART	
030	2668250-0000		1	GUIDE RAIL	
040	2668252-0000		1	GUIDE RAIL	
050	2668249-0000		1	GUIDE RAIL	
060	2668253-0000		1	GUIDE RAIL	
090	2647126-0000		2	BRACKET	
110	2895561-0000		2	SPACER	
115	2752534-0000		4	SPACER	
120	2708323-0000		1	RAIL	
130	2708322-0000		1	RAIL	
180	2668254-0000		2	BRACKET	
190	2674266-0000		2	SPACER	
210	315105-0153		8	WASHER BRB 6,4X12 RFR	
220	312105-0370		8	SCREW M6S ISO 4017 M6X20 A480	
230	315105-0165		12	WASHER BRB 8,4X16 RFR	
240	312105-0469		2	SCREW M6S ISO 4014 M8X90 A480	
250	312105-0455		4	SCREW M6S ISO 4017 M8X30 A480	
260	312105-0466		4	SCREW M6S ISO 4014 M8X75 A480	
270	312105-0465		2	SCREW M6S ISO 4014 M8X70 A480	
TBA 0500B, TBA 1000B (See drawing on page: 5-114)					
010	2520175-0000		1	FOLDING PART	
020	2520172-0000		1	FOLDING PART	
030	2603659-0000		1	FOLDING PART	
040	2603660-0000		1	FOLDING PART	
050	2603548-0000		1	FOLDING PART	
060	2603547-0000		1	FOLDING PART	
070	2603662-0000		4	BRACKET	
080	2603661-0000		2	BRACKET	
090	2544342-0000		2	BRACKET	
100	2555082-0000		1	SPACER SCREW	
110	1539871-0000		3	SPACER	
120	2603664-0000		1	RAIL	
130	2605213-0000		1	RAIL	
200	312155-0366		10	SCREW DIN 7991 MF6S M6X12 A4 70	
210	315105-0153		6	WASHER BRB 6,4X12 RFR	
220	312105-0368		6	SCREW M6S ISO 4017 M6X16 A480	
230	315105-0165		8	WASHER BRB 8,4X16 RFR	
240	312105-0465		3	SCREW M6S ISO 4014 M8X70 A480	
250	312105-0457		5	SCREW M6S ISO 4014 M8X35 A480	
TBA 0500SQ, TBA 1000SQ (See drawing on page: 5-128)					

Machine Type | Group Description | Used-In | Group Number | Page No

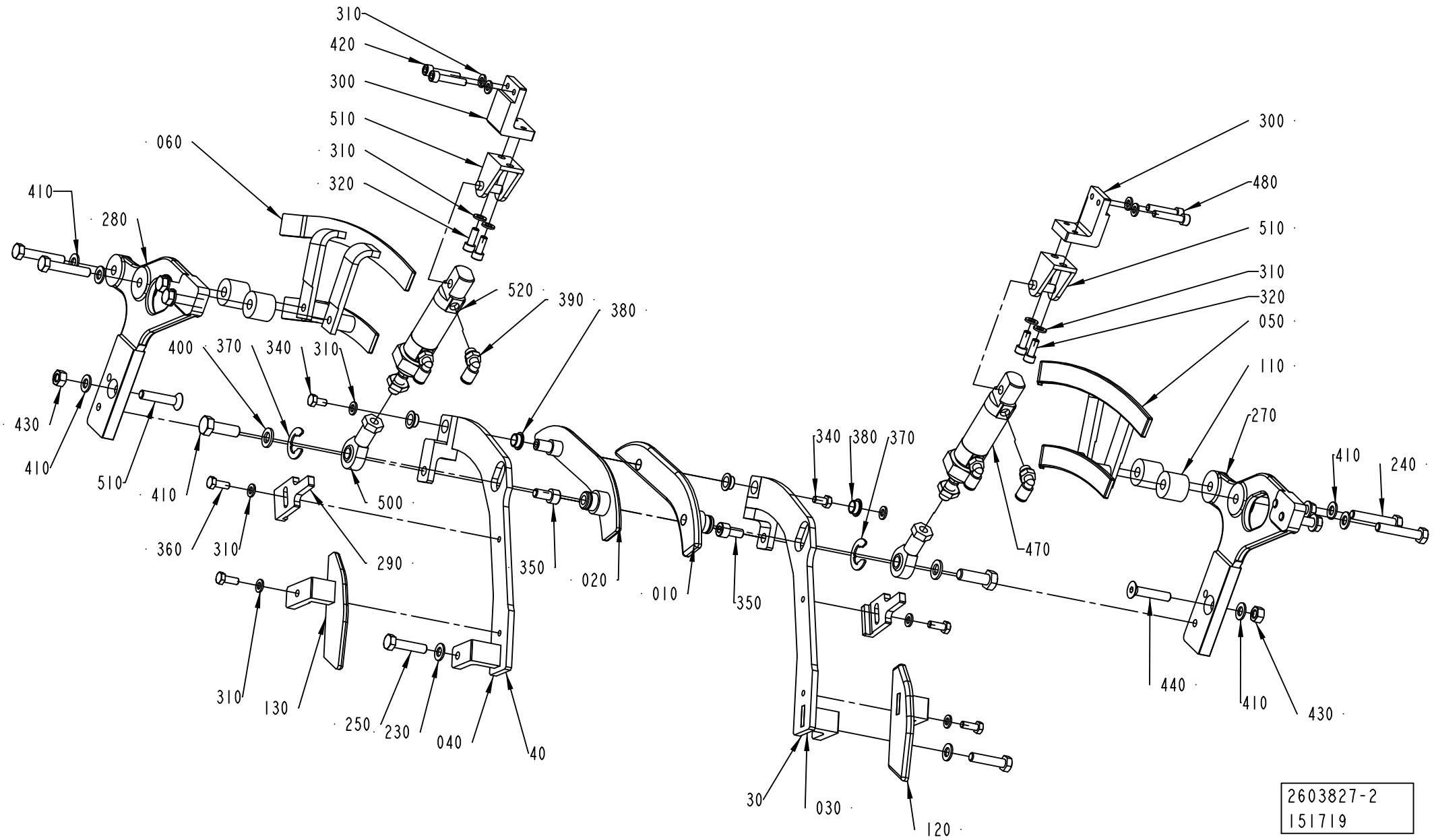
310
420
300
510
310
320
060
410
280
520
390
380
400
370
340
310
430
410
510
410
500
360
310
290
350
020
010
350
340
380
370
470
300
480
510
310
320
050
110
270
410
240
410
440
410
430
310
130
250
230
040
40
30
030
120
2603827-2
151719

ECM: 389640 - 20090701
Group number: 2603827-0100
Assembly Drawing: 2603827-2_1_AA

This list covers pages from 5-114 to 5-129

Pos	Part No	UN	Qty	Description	Page No
TBA 0500SQ, TBA 1000SQ (Cont'd) (See drawing on page: 5-128)					
010	1144555-0000		4	STUD SCREW	
020	2529217-0000		1	RAIL	
030	2529219-0000		1	RAIL	
040	2529232-0000		1	FOLDING BAR	
050	2529240-0000		1	FOLDING BAR	
060	2588216-0000		1	GUIDE	
070	2588217-0000		1	GUIDE	
080	2588218-0000		2	STRUT	
090	2849961-0000		1	GUIDE	
100	2849962-0000		1	GUIDE	
110	2876334-0000		2	HOLDER	
120	2598822-0000		1	GUIDE PIN	
130	2598823-0000		1	GUIDE PIN	
140	2619703-0000		4	SPACER	
150	2619384-0000		2	HOLDER	
160	2598986-0000		1	RAIL	
170	2598987-0000		1	RAIL	
190	2851645-0000		4	SPACER	
200	2851646-0000		4	SPACER	
510	312105-0455		8	SCREW M6S ISO 4017 M8X30 A480	
520	312105-0463		4	SCREW M6S ISO 4014 M8X60 A480	
530	312109-0457		4	SCREW M6S ISO 4017 M8X35 A480	
540	312605-0318		20	HEXAGON NUT, M6M M8 A280	
550	312105-0461		4	SCREW M6S ISO 4014 M8X50 A480	
560	315105-0165		44	WASHER BRB 8,4X16 RFR	
660	312105-0467		4	SCREW M6S ISO 4014 M8X80 A480	
TBA 1400B (See drawing on page: 5-126)					
010	2775359-0000		1	FOLDING PART	
020	2772887-0000		1	FOLDING PART	
030	2776216-0000		1	FOLDING PART	
040	2772885-0000		1	FOLDING PART	
050	2775361-0000		1	RAIL	
060	2772892-0000		1	RAIL	
110	2776217-0000		4	SPACER	
120	2775360-0000		1	FOLDING PART	
130	2772890-0000		1	FOLDING PART	
230	315105-0165		12	WASHER BRB 8,4X16 RFR	
240	312105-0464		4	SCREW M6S ISO 4014 M8X65 A480	
250	312109-0457		6	SCREW M6S ISO 4017 M8X35 A480	
280	1317043-0000		2	SUPPORT	
290	2603147-0000		2	PLATE	
300	2772891-0000		2	BRACKET	
310	315105-0153		18	WASHER BRB 6,4X12 RFR	
320	312115-0368		4	SCREW ISO4762 M6X16 A4 80	
340	312105-0366		2	SCREW M6S ISO 4017 M6X12 A480	
350	312115-0449		2	SCREW ISO4762 M8X16 A4 80	
360	312105-0368		4	SCREW M6S ISO 4017 M6X16 A480	
370	315755-0113		2	RETAINING RING SHAFT DIN 6799 15 A2	
380	321153-0136		4	FLANGE BUSHING, 10X12X6 MM	
390	350002-0006		4	PUSH-IN L-FITTING QSL-F-G1/8-6	
400	315105-0171		2	WASHER BRB 10X18 RFR	
410	312105-0495		2	SCREW M6S ISO 4017 M10X30 A480	
420	312115-0374		4	SCREW ISO4762 M6X30 A4 80	
430	312605-0318		2	HEXAGON NUT, M6M M8 A280	
440	312155-0459		2	SCREW DIN 7991 MF6S M8X40 A4 70	
500	90115-0134		2	ROD END, ID=10 MM, M10X1,25	
510	90459-4932		2	REAR CLEVIS FOOT MOUNTING , CRLBN-20/25	
520	90459-1953		2	DOUBLE ACTING, MINI-ISO, CYL. 25-10	
TBA 1890S, TBA 2000S (See drawing on page: 5-116)					
010	2598497-0000		1	FOLDING PART	
020	2598496-0000		1	FOLDING PART	
030	2598495-0000		1	FOLDING PART	
040	2598494-0000		1	FOLDING PART	
050	1499151-0000		1	RAIL	
060	1499150-0000		1	RAIL	
110	2629344-0000		4	SPACER	
120	2598492-0000		1	FOLDING PART	
130	2598491-0000		1	FOLDING PART	
230	315105-0165		12	WASHER BRB 8,4X16 RFR	
240	312109-0460		4	SCREW M6S ISO 4017 M8X45 A480	
250	312109-0457		6	SCREW M6S ISO 4017 M8X35 A480	
280	1317043-0000		2	SUPPORT	
290	2603147-0000		2	PLATE	
300	2598493-0000		2	BRACKET	
310	315105-0153		14	WASHER BRB 6,4X12 RFR	
320	312115-0368		4	SCREW ISO4762 M6X16 A4 80	
340	312105-0366		2	SCREW M6S ISO 4017 M6X12 A480	
350	312115-0449		2	SCREW ISO4762 M8X16 A4 80	
360	312105-0368		4	SCREW M6S ISO 4017 M6X16 A480	
370	315755-0113		2	RETAINING RING SHAFT DIN 6799 15 A2	
380	321153-0136		4	FLANGE BUSHING, 10X12X6 MM	
390	350002-0006		4	PUSH-IN L-FITTING QSL-F-G1/8-6	
400	315105-0171		2	WASHER BRB 10X18 RFR	

Machine Type | Group Description | Used-In | Group Number | Page No

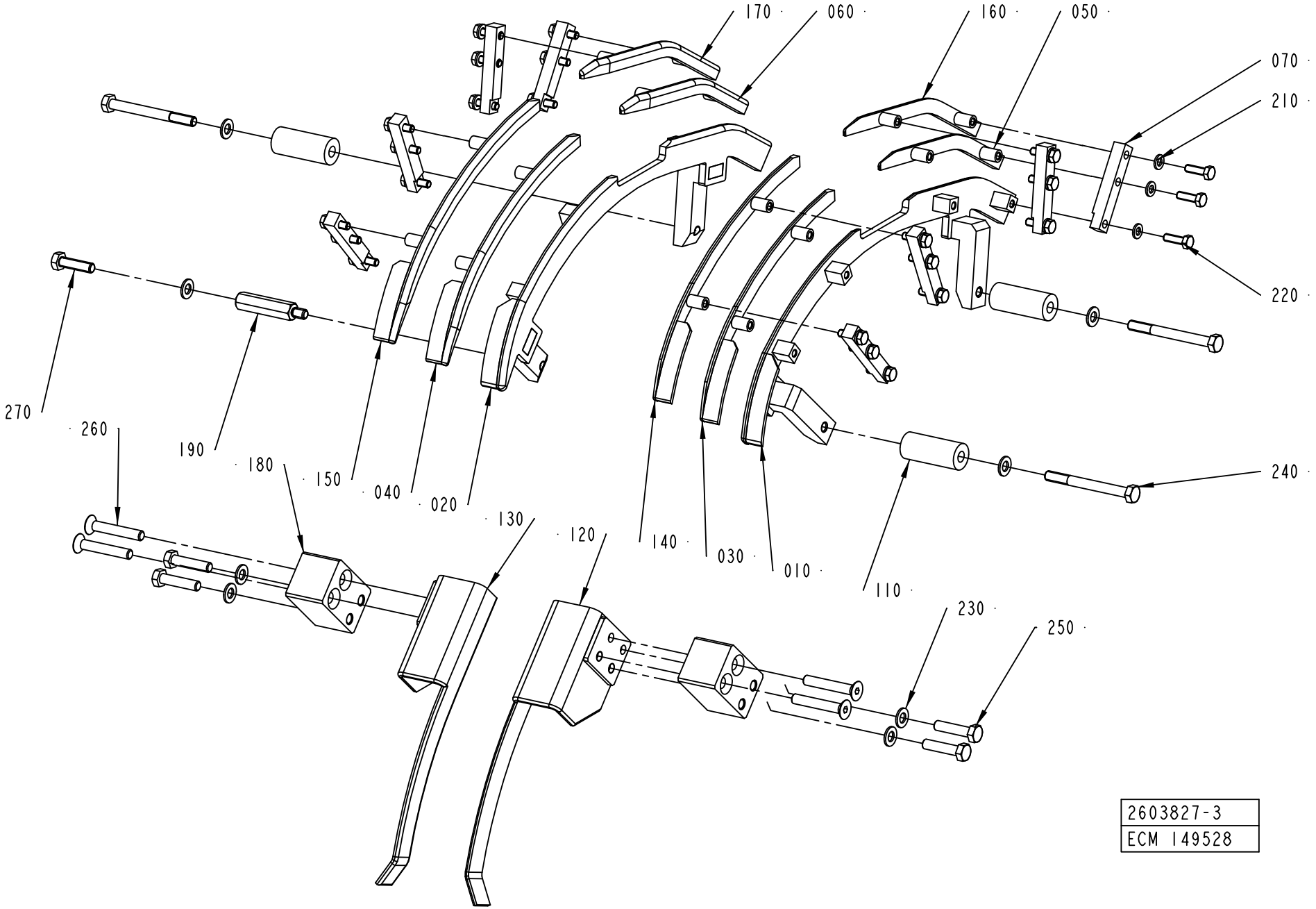
170
060
160
050
070
210
220
240
270
260
190
180
150
040
020
130
120
140
030
010
110
230
250
2603827-3
ECM 149528

Pos	Part No	UN	Qty	Description	Page No
TBA 1890S, TBA 2000S (Cont'd) (See drawing on page: 5-116)					
410	312105-0495		2	SCREW M6S ISO 4017 M10X30 A480	
420	312115-0374		4	SCREW ISO4762 M6X30 A4 80	
430	312605-0318		2	HEXAGON NUT, M6M M8 A280	
440	312155-0459		2	SCREW DIN 7991 MF6S M8X40 A4 70	
500	90115-0134		2	ROD END, ID=10 MM, M10X1,25	
510	90459-4932		2	REAR CLEVIS FOOT MOUNTING , CRLBN-20/25	
520	90459-1953		2	DOUBLE ACTING, MINI-ISO, CYL. 25-10	
TPA 0250SQ, TPA 0200SQ (See drawing on page: 5-124)					
010	2674260-0000		1	FOLDING PART	
020	2674261-0000		1	FOLDING PART	
030	2674262-0000		1	FOLDING PART	
040	2674263-0000		1	FOLDING PART	
050	2674264-0000		1	FOLDING PART	
060	2674265-0000		1	FOLDING PART	
090	2647126-0000		2	BRACKET	
110	2674267-0000		2	SPACER	
120	2735128-0000		1	RAIL	
130	2735127-0000		1	RAIL	
180	2674268-0000		2	SPACER	
190	2674266-0000		2	SPACER	
210	315105-0153		8	WASHER BRB 6,4X12 RFR	
220	312105-0370		8	SCREW M6S ISO 4017 M6X20 A480	
230	315105-0165		8	WASHER BRB 8,4X16 RFR	
240	312105-0469		2	SCREW M6S ISO 4014 M8X90 A480	
250	312105-0455		4	SCREW M6S ISO 4017 M8X30 A480	
260	312155-0455		4	SCREW DIN 7991 MF6S M8X30 A4 70	
270	312105-0465		2	SCREW M6S ISO 4014 M8X70 A480	
TPA 1000SQ, TPA 0750SQ (See drawing on page: 5-120)					
010	2647128-0000		1	FOLDING PART	
020	2647127-0000		1	FOLDING PART	
030	2647122-0000		1	FOLDING PART	
040	2647121-0000		1	FOLDING PART	
050	2647130-0000		1	FOLDING PART	
060	2647129-0000		1	FOLDING PART	
070	2647126-0000		2	BRACKET	
080	2644368-0000		2	BRACKET	
110	1519355-0000		12	SPACER	
220	312105-0455		6	SCREW M6S ISO 4017 M8X30 A480	
230	315105-0165		18	WASHER BRB 8,4X16 RFR	
240	312105-0462		12	SCREW M6S ISO 4014 M8X55 A480	

Pos	Part No	UN	Qty	Description	Page No

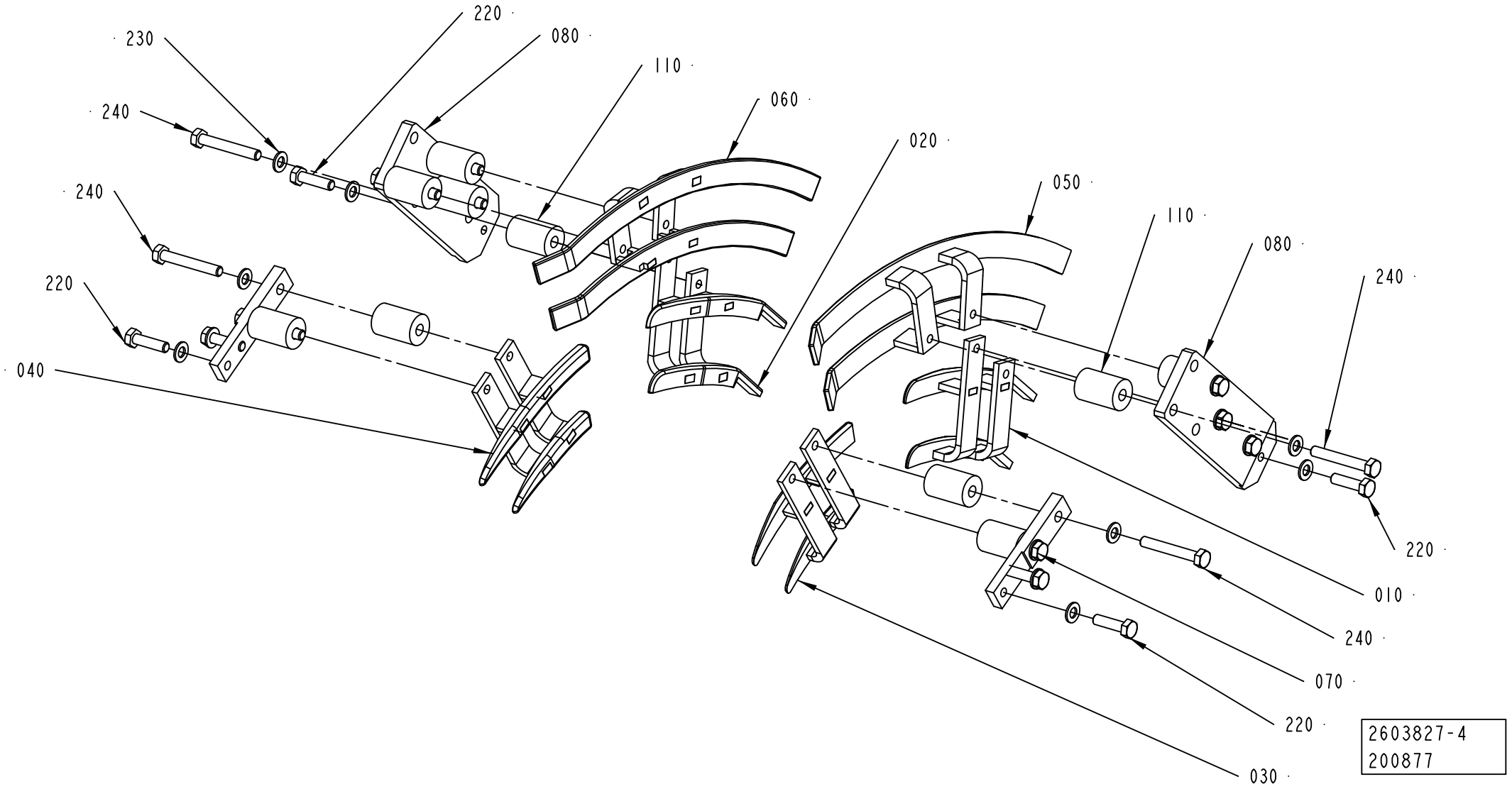
230
220
080
110
060
240
240
220
040
020
050
110
080
240
220
010
240
070
220
030
2603827-4
200877

ECM: 389640 - 20090701
Group number: 2603827-0100
Assembly Drawing: 2603827-4_1_AA

This list covers pages from 5-114 to 5-129

Pos	Part No	UN	Qty	Description	Page No
SEE PREVIOUS LISTS PAGES: 5-115, 5-117, 5-119.					

Pos	Part No	UN	Qty	Description	Page No

Machine Type | Group Description | Used-In | Group Number | Page No

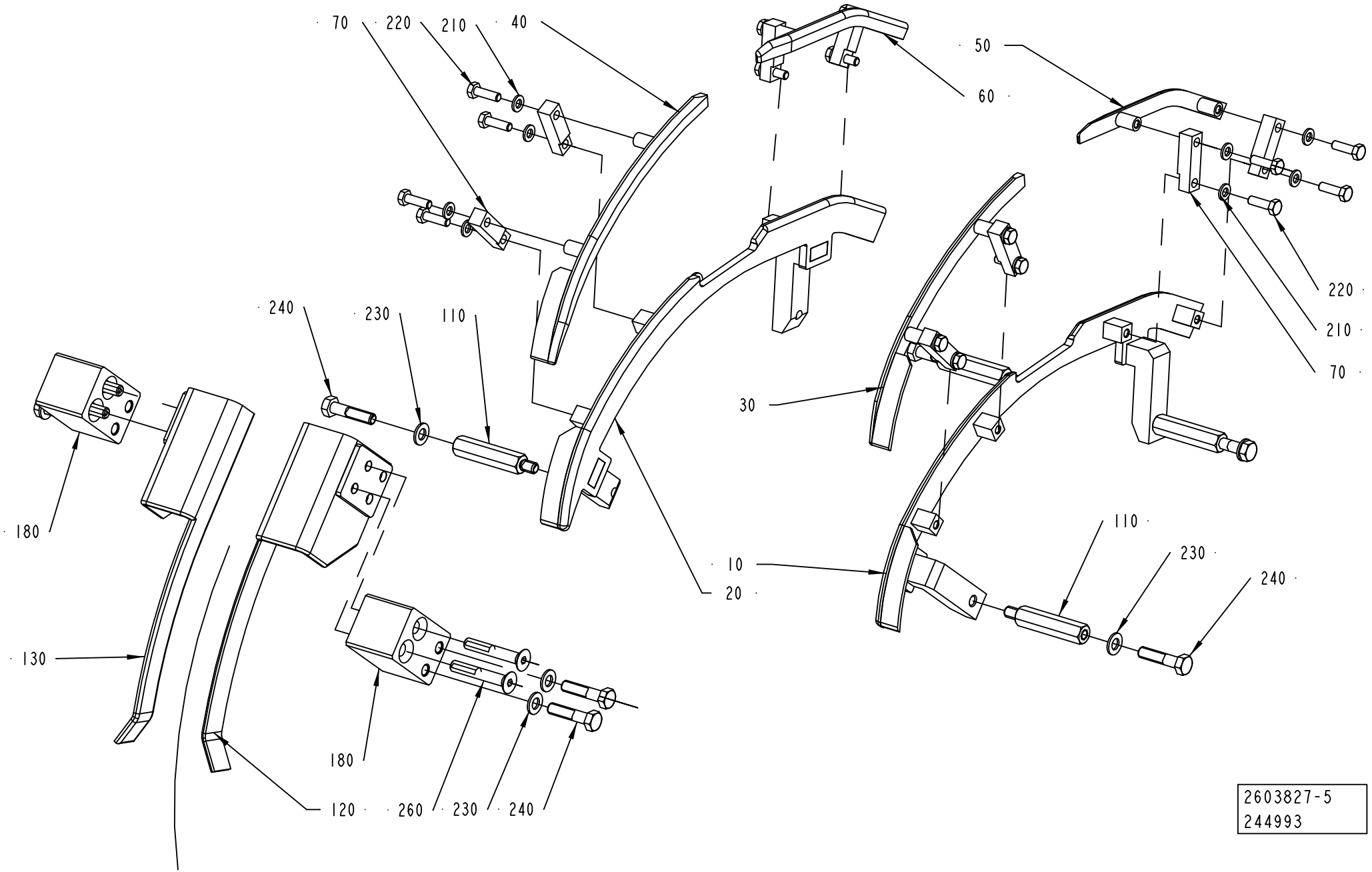
70
220
210
40
50
60
240
230
110
30
220
210
70
180
10
20
110
230
240
130
180
120
260
230
240
2603827-5
244993

Pos	Part No	UN	Qty	Description	Page No

SEE PREVIOUS LISTS PAGES: 5-115, 5-117, 5-119.

Pos	Part No	UN	Qty	Description	Page No

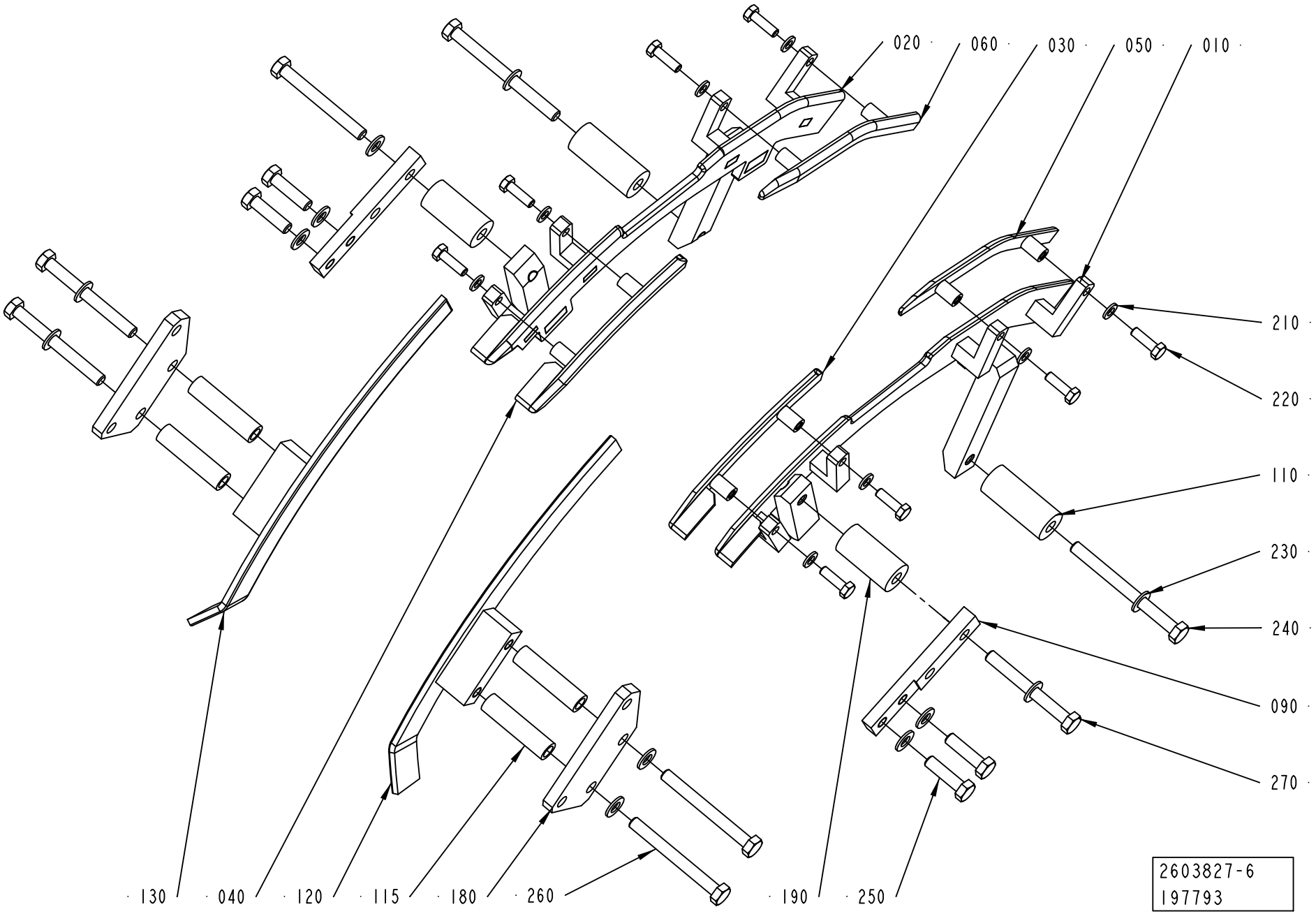
020
060
030
050
010
210
220
110
230
240
090
270
130
040
120
115
180
260
190
250
2603827-6
197793

Pos	Part No	UN	Qty	Description	Page No
SEE PREVIOUS LISTS PAGES: 5-115, 5-117, 5-119.					

Pos	Part No	UN	Qty	Description	Page No

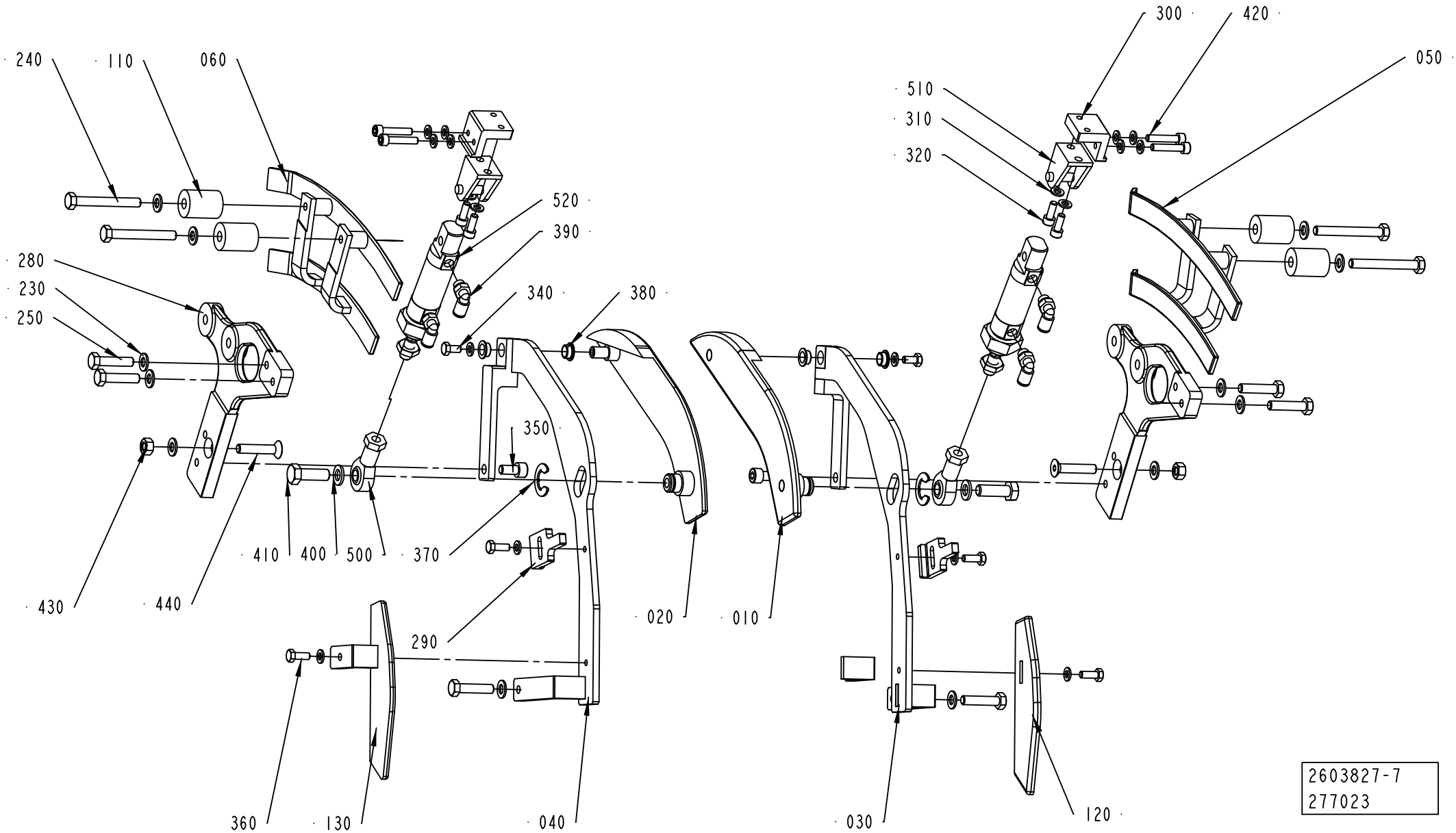
240
110
060
300
420
050
510
310
320
520
390
280
230
250
340
380
350
410
400
500
370
430
440
290
020
010
360
130
040
030
120
2603827-7
277023

Pos	Part No	UN	Qty	Description	Page No
SEE PREVIOUS LISTS PAGES: 5-115, 5-117, 5-119.					

Pos	Part No	UN	Qty	Description	Page No

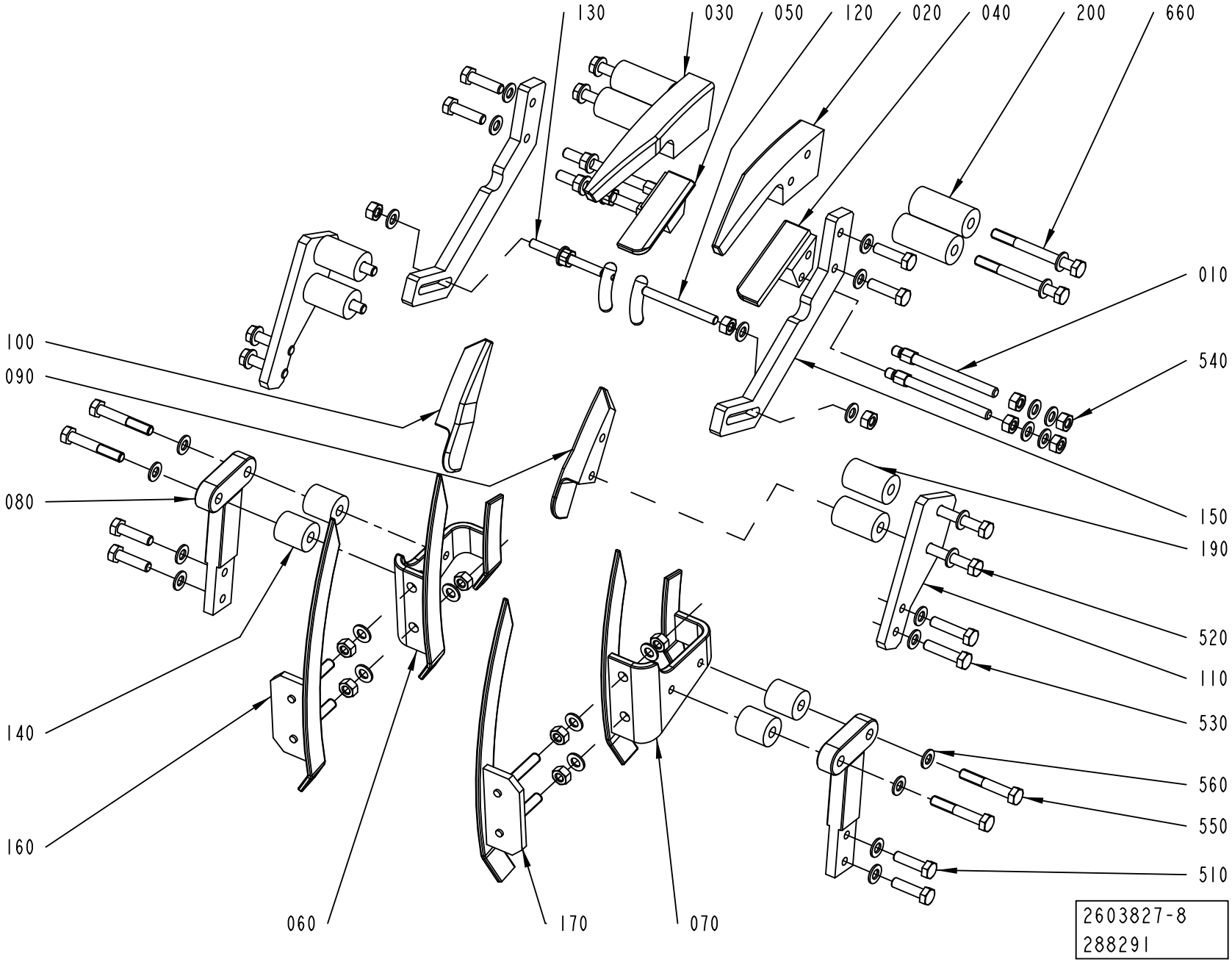
130
030
050
120
020
040
200
660
010
540
100
090
080
150
190
520
110
530
140
560
160
550
510
060
170
070
2603827-8
288291

Pos	Part No	UN	Qty	Description	Page No
SEE PREVIOUS LISTS PAGES: 5-115, 5-117, 5-119.					

Pos	Part No	UN	Qty	Description	Page No

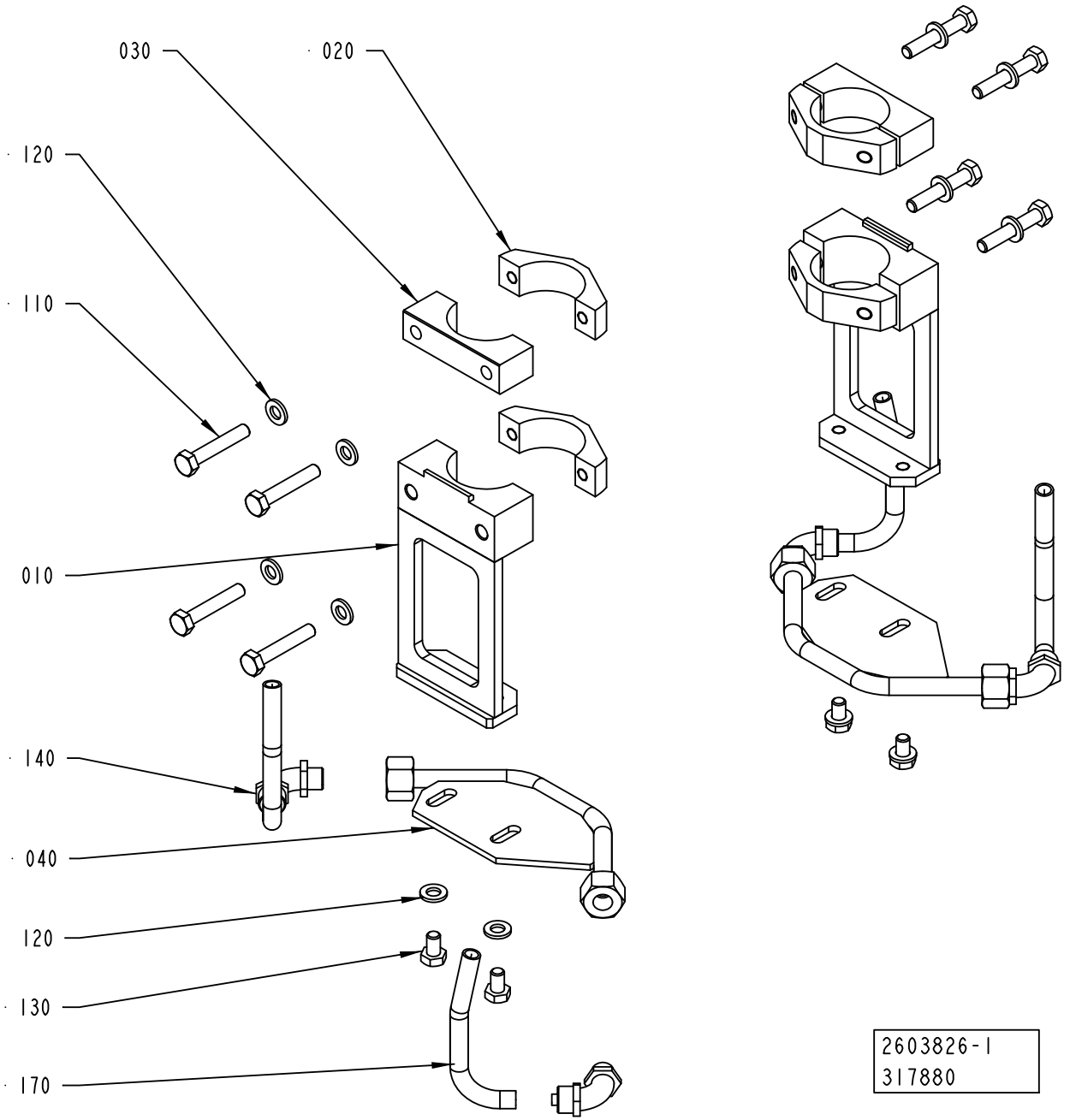
030
020
120
110
010
140
040
120
130
170
2603826-1
317880

Pos	Part No	UN	Qty	Description	Page No
TBA 0200M, TBA 0200B, TBA 0250S, TBA 0250B, TBA 0330S (See drawing on page: 5-130)					
010	2599044-0000		2	BRACKET	
020	2598486-0000		4	CLAMP	
030	2598485-0000		2	CLAMP	
040	2594058-0000		2	GUIDE	
100	315105-0153		4	WASHER BRB 6,4X12 RFR	
110	312105-0376		4	SCREW M6S ISO 4014 M6X35 A480	
120	315105-0153		4	WASHER BRB 6,4X12 RFR	
130	312105-0325		4	SCREW M6S ISO 4017 M5X10 A480	
140	342931-0121		4	ELBOW 90 COUPL.,EXT.THREAD 8/6-G1/8"	
150	312115-0372		4	SCREW ISO4762 M6X25 A4 80	
TBA 0200SQ, TBA 0250SQ (See drawing on page: 5-130)					
010	2599044-0000		2	BRACKET	
020	2598486-0000		4	CLAMP	
030	2598485-0000		2	CLAMP	
040	2668247-0000		2	GUIDE	
100	315105-0153		4	WASHER BRB 6,4X12 RFR	
110	312105-0376		4	SCREW M6S ISO 4014 M6X35 A480	
120	315105-0153		4	WASHER BRB 6,4X12 RFR	
130	312105-0325		4	SCREW M6S ISO 4017 M5X10 A480	
140	342931-0121		4	ELBOW 90 COUPL.,EXT.THREAD 8/6-G1/8"	
150	312115-0372		4	SCREW ISO4762 M6X25 A4 80	
TBA 0500B, TBA 1000B (See drawing on page: 5-130)					
010	2597768-0000		2	BRACKET	
020	2598486-0000		4	CLAMP	
030	2598485-0000		2	CLAMP	
040	2597769-0000		2	GUIDE	
100	315105-0153		8	WASHER BRB 6,4X12 RFR	
110	312105-0376		8	SCREW M6S ISO 4014 M6X35 A480	
120	315105-0153		4	WASHER BRB 6,4X12 RFR	
130	312105-0364		4	SCREW M6S ISO 4017 M6X10 A480	
140	342931-0121		4	ELBOW 90 COUPL.,EXT.THREAD 8/6-G1/8"	
TBA 0500SQ, TBA 1000SQ (See drawing on page: 5-132)					
010	2660549-0000		1	BRACKET	
020	2598486-0000		4	CLAMP	
030	2598485-0000		2	CLAMP	
040	2660550-0000		1	GUIDE	
050	2660552-0000		1	BRACKET	
060	2660555-0000		1	GUIDE	
100	315105-0153		8	WASHER BRB 6,4X12 RFR	
110	312105-0376		8	SCREW M6S ISO 4014 M6X35 A480	
120	315105-0153		4	WASHER BRB 6,4X12 RFR	
130	312105-0364		4	SCREW M6S ISO 4017 M6X10 A480	
160	342921-0121		4	STRAIGHT CPLNG,EXT.THREADED 8/6-G1/8INCH	
TBA 1890S, TBA 2000S, TBA 1400B (See drawing on page: 5-130)					
010	2603138-0000		2	BRACKET	
020	2603148-0000		2	CLAMP	
040	2603140-0000		2	GUIDE	
110	312115-0370		4	SCREW ISO4762 M6X20 A4 80	
120	315105-0146		4	WASHER BRB 5,3X10 RFR	
130	312115-0327		4	SCREW ISO4762 M5X12 A4 80	
140	342931-0121		4	ELBOW 90 COUPL.,EXT.THREAD 8/6-G1/8"	
TPA 0250SQ, TPA 0200SQ (See drawing on page: 5-134)					
010	2599044-0000		2	BRACKET	
020	2598486-0000		4	CLAMP	
030	2598485-0000		2	CLAMP	
040	2674259-0000		2	GUIDE	
100	315105-0153		4	WASHER BRB 6,4X12 RFR	
110	312105-0376		4	SCREW M6S ISO 4014 M6X35 A480	
130	312105-0325		4	SCREW M6S ISO 4017 M5X10 A480	
140	342931-0121		4	ELBOW 90 COUPL.,EXT.THREAD 8/6-G1/8"	
150	312115-0372		4	SCREW ISO4762 M6X25 A4 80	
TPA 1000SQ, TPA 0750SQ (See drawing on page: 5-130)					
010	2597768-0000		2	BRACKET	
020	2598486-0000		4	CLAMP	
030	2598485-0000		2	CLAMP	
040	2647131-0000		2	GUIDE	
100	315105-0153		8	WASHER BRB 6,4X12 RFR	
110	312105-0376		8	SCREW M6S ISO 4014 M6X35 A480	
120	315105-0153		4	WASHER BRB 6,4X12 RFR	
130	312105-0364		4	SCREW M6S ISO 4017 M6X10 A480	
140	342931-0121		4	ELBOW 90 COUPL.,EXT.THREAD 8/6-G1/8"	
Common Parts					
170	90166-0118	MM	1500	TUBE 8 MM PA BLACK	

Machine Type | Group Description | Used-In | Group Number | Page No

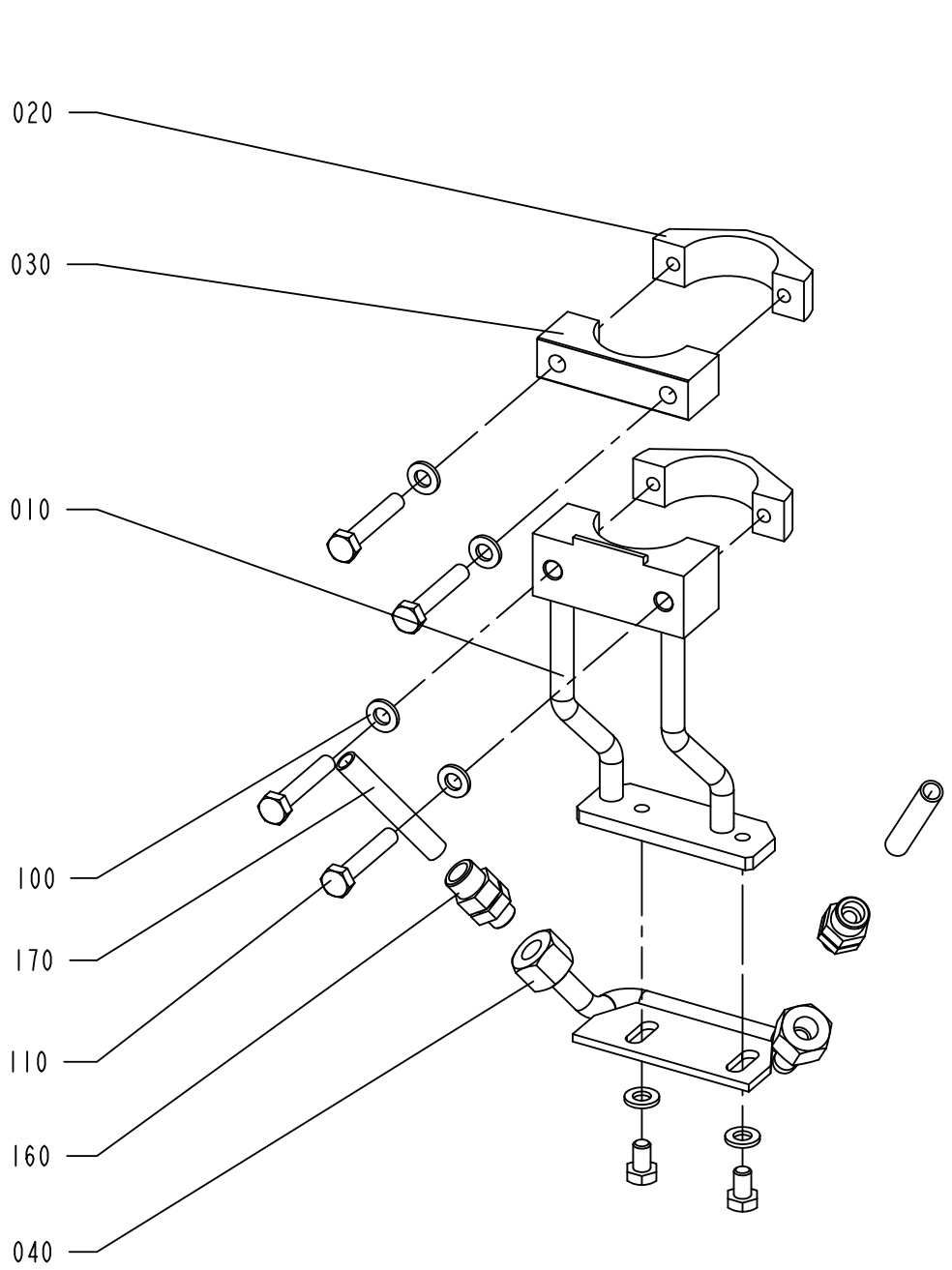

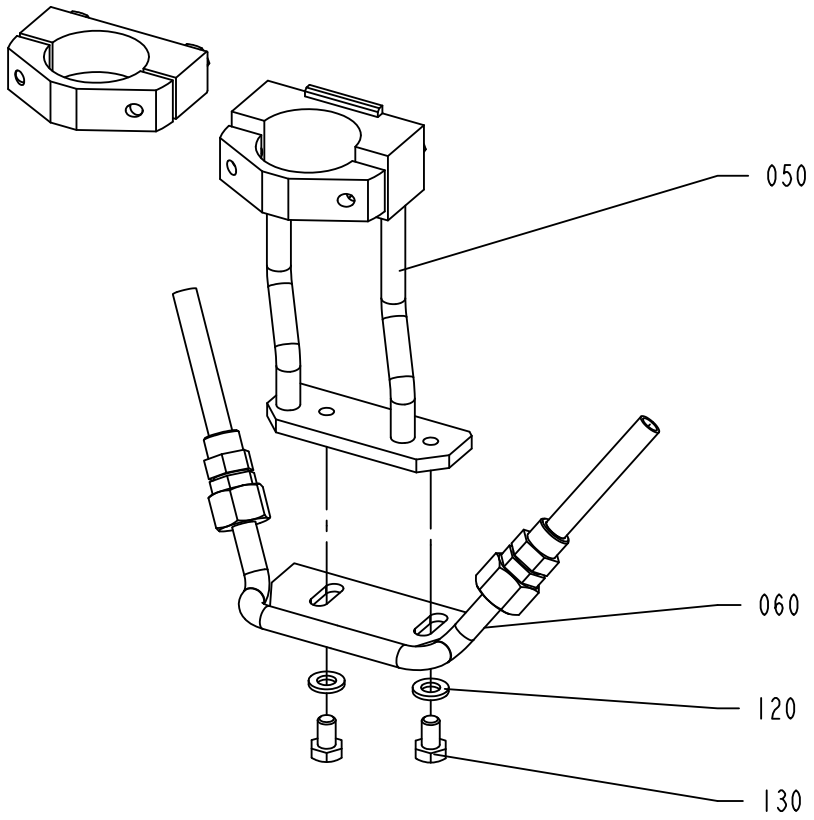

2603826-2
317880

ECM: 369015 - 20090101
Group number: 2603826-0100
Assembly Drawing: 2603826-2_1_AB

This list covers pages from 5-130 to 5-135

Pos	Part No	UN	Qty	Description	Page No
TBA 0200M, TBA 0200B, TBA 0250S, TBA 0250B, TBA 0330S (See drawing on page: 5-130)					
010	2599044-0000		2	BRACKET	
020	2598486-0000		4	CLAMP	
030	2598485-0000		2	CLAMP	
040	2594058-0000		2	GUIDE	
100	315105-0153		4	WASHER BRB 6,4X12 RFR	
110	312105-0376		4	SCREW M6S ISO 4014 M6X35 A480	
120	315105-0153		4	WASHER BRB 6,4X12 RFR	
130	312105-0325		4	SCREW M6S ISO 4017 M5X10 A480	
140	342931-0121		4	ELBOW 90 COUPL.,EXT.THREAD 8/6-G1/8"	
150	312115-0372		4	SCREW ISO4762 M6X25 A4 80	
TBA 0200SQ, TBA 0250SQ (See drawing on page: 5-130)					
010	2599044-0000		2	BRACKET	
020	2598486-0000		4	CLAMP	
030	2598485-0000		2	CLAMP	
040	2668247-0000		2	GUIDE	
100	315105-0153		4	WASHER BRB 6,4X12 RFR	
110	312105-0376		4	SCREW M6S ISO 4014 M6X35 A480	
120	315105-0153		4	WASHER BRB 6,4X12 RFR	
130	312105-0325		4	SCREW M6S ISO 4017 M5X10 A480	
140	342931-0121		4	ELBOW 90 COUPL.,EXT.THREAD 8/6-G1/8"	
150	312115-0372		4	SCREW ISO4762 M6X25 A4 80	
TBA 0500B, TBA 1000B (See drawing on page: 5-130)					
010	2597768-0000		2	BRACKET	
020	2598486-0000		4	CLAMP	
030	2598485-0000		2	CLAMP	
040	2597769-0000		2	GUIDE	
100	315105-0153		8	WASHER BRB 6,4X12 RFR	
110	312105-0376		8	SCREW M6S ISO 4014 M6X35 A480	
120	315105-0153		4	WASHER BRB 6,4X12 RFR	
130	312105-0364		4	SCREW M6S ISO 4017 M6X10 A480	
140	342931-0121		4	ELBOW 90 COUPL.,EXT.THREAD 8/6-G1/8"	
TBA 0500SQ, TBA 1000SQ (See drawing on page: 5-132)					
010	2660549-0000		1	BRACKET	
020	2598486-0000		4	CLAMP	
030	2598485-0000		2	CLAMP	
040	2660550-0000		1	GUIDE	
050	2660552-0000		1	BRACKET	
060	2660555-0000		1	GUIDE	
100	315105-0153		8	WASHER BRB 6,4X12 RFR	
110	312105-0376		8	SCREW M6S ISO 4014 M6X35 A480	
120	315105-0153		4	WASHER BRB 6,4X12 RFR	
130	312105-0364		4	SCREW M6S ISO 4017 M6X10 A480	
160	342921-0121		4	STRAIGHT CPLNG,EXT.THREADED 8/6-G1/8INCH	
TBA 1890S, TBA 2000S, TBA 1400B (See drawing on page: 5-130)					
010	2603138-0000		2	BRACKET	
020	2603148-0000		2	CLAMP	
040	2603140-0000		2	GUIDE	
110	312115-0370		4	SCREW ISO4762 M6X20 A4 80	
120	315105-0146		4	WASHER BRB 5,3X10 RFR	
130	312115-0327		4	SCREW ISO4762 M5X12 A4 80	
140	342931-0121		4	ELBOW 90 COUPL.,EXT.THREAD 8/6-G1/8"	
TPA 0250SQ, TPA 0200SQ (See drawing on page: 5-134)					
010	2599044-0000		2	BRACKET	
020	2598486-0000		4	CLAMP	
030	2598485-0000		2	CLAMP	
040	2674259-0000		2	GUIDE	
100	315105-0153		4	WASHER BRB 6,4X12 RFR	
110	312105-0376		4	SCREW M6S ISO 4014 M6X35 A480	
130	312105-0325		4	SCREW M6S ISO 4017 M5X10 A480	
140	342931-0121		4	ELBOW 90 COUPL.,EXT.THREAD 8/6-G1/8"	
150	312115-0372		4	SCREW ISO4762 M6X25 A4 80	
TPA 1000SQ, TPA 0750SQ (See drawing on page: 5-130)					
010	2597768-0000		2	BRACKET	
020	2598486-0000		4	CLAMP	
030	2598485-0000		2	CLAMP	
040	2647131-0000		2	GUIDE	
100	315105-0153		8	WASHER BRB 6,4X12 RFR	
110	312105-0376		8	SCREW M6S ISO 4014 M6X35 A480	
120	315105-0153		4	WASHER BRB 6,4X12 RFR	
130	312105-0364		4	SCREW M6S ISO 4017 M6X10 A480	
140	342931-0121		4	ELBOW 90 COUPL.,EXT.THREAD 8/6-G1/8"	
Common Parts					
170	90166-0118	MM	1500	TUBE 8 MM PA BLACK	

Machine Type | Group Description | Used-In | Group Number | Page No

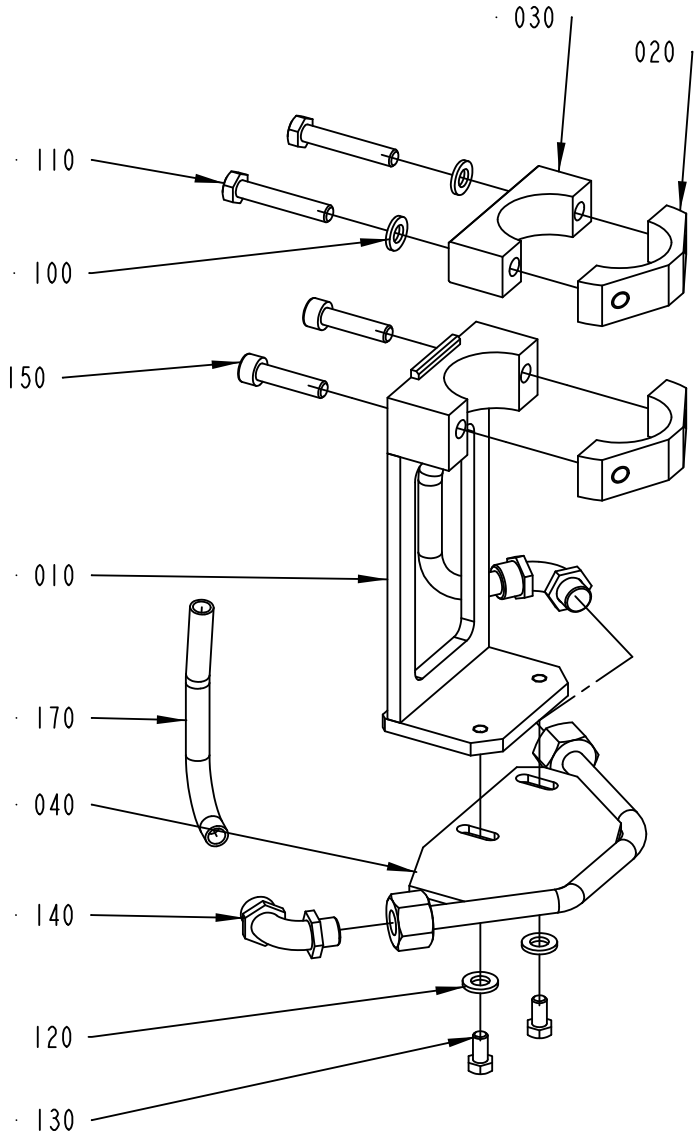
030
020
110
100
150
010
170
040
140
120
130

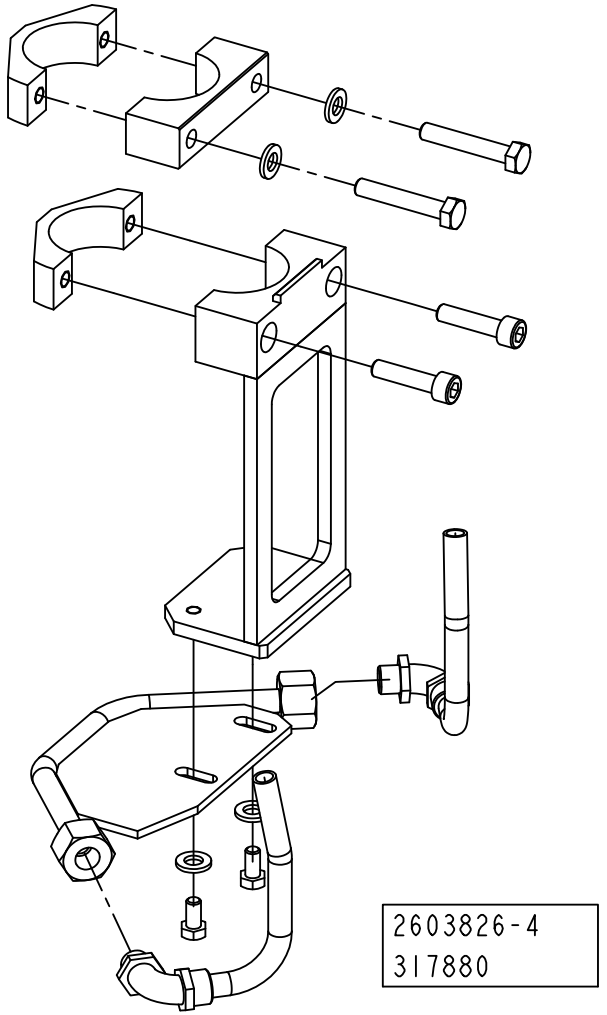
2603826-4
317880

Pos	Part No	UN	Qty	Description	Page No
TBA 0200M, TBA 0200B, TBA 0250S, TBA 0250B, TBA 0330S (See drawing on page: 5-130)					
010	2599044-0000		2	BRACKET	
020	2598486-0000		4	CLAMP	
030	2598485-0000		2	CLAMP	
040	2594058-0000		2	GUIDE	
100	315105-0153		4	WASHER BRB 6,4X12 RFR	
110	312105-0376		4	SCREW M6S ISO 4014 M6X35 A480	
120	315105-0153		4	WASHER BRB 6,4X12 RFR	
130	312105-0325		4	SCREW M6S ISO 4017 M5X10 A480	
140	342931-0121		4	ELBOW 90 COUPL.,EXT.THREAD 8/6-G1/8"	
150	312115-0372		4	SCREW ISO4762 M6X25 A4 80	
TBA 0200SQ, TBA 0250SQ (See drawing on page: 5-130)					
010	2599044-0000		2	BRACKET	
020	2598486-0000		4	CLAMP	
030	2598485-0000		2	CLAMP	
040	2668247-0000		2	GUIDE	
100	315105-0153		4	WASHER BRB 6,4X12 RFR	
110	312105-0376		4	SCREW M6S ISO 4014 M6X35 A480	
120	315105-0153		4	WASHER BRB 6,4X12 RFR	
130	312105-0325		4	SCREW M6S ISO 4017 M5X10 A480	
140	342931-0121		4	ELBOW 90 COUPL.,EXT.THREAD 8/6-G1/8"	
150	312115-0372		4	SCREW ISO4762 M6X25 A4 80	
TBA 0500B, TBA 1000B (See drawing on page: 5-130)					
010	2597768-0000		2	BRACKET	
020	2598486-0000		4	CLAMP	
030	2598485-0000		2	CLAMP	
040	2597769-0000		2	GUIDE	
100	315105-0153		8	WASHER BRB 6,4X12 RFR	
110	312105-0376		8	SCREW M6S ISO 4014 M6X35 A480	
120	315105-0153		4	WASHER BRB 6,4X12 RFR	
130	312105-0364		4	SCREW M6S ISO 4017 M6X10 A480	
140	342931-0121		4	ELBOW 90 COUPL.,EXT.THREAD 8/6-G1/8"	
TBA 0500SQ, TBA 1000SQ (See drawing on page: 5-132)					
010	2660549-0000		1	BRACKET	
020	2598486-0000		4	CLAMP	
030	2598485-0000		2	CLAMP	
040	2660550-0000		1	GUIDE	
050	2660552-0000		1	BRACKET	
060	2660555-0000		1	GUIDE	
100	315105-0153		8	WASHER BRB 6,4X12 RFR	
110	312105-0376		8	SCREW M6S ISO 4014 M6X35 A480	
120	315105-0153		4	WASHER BRB 6,4X12 RFR	
130	312105-0364		4	SCREW M6S ISO 4017 M6X10 A480	
160	342921-0121		4	STRAIGHT CPLNG,EXT.THREADED 8/6-G1/8INCH	
TBA 1890S, TBA 2000S, TBA 1400B (See drawing on page: 5-130)					
010	2603138-0000		2	BRACKET	
020	2603148-0000		2	CLAMP	
040	2603140-0000		2	GUIDE	
110	312115-0370		4	SCREW ISO4762 M6X20 A4 80	
120	315105-0146		4	WASHER BRB 5,3X10 RFR	
130	312115-0327		4	SCREW ISO4762 M5X12 A4 80	
140	342931-0121		4	ELBOW 90 COUPL.,EXT.THREAD 8/6-G1/8"	
TPA 0250SQ, TPA 0200SQ (See drawing on page: 5-134)					
010	2599044-0000		2	BRACKET	
020	2598486-0000		4	CLAMP	
030	2598485-0000		2	CLAMP	
040	2674259-0000		2	GUIDE	
100	315105-0153		4	WASHER BRB 6,4X12 RFR	
110	312105-0376		4	SCREW M6S ISO 4014 M6X35 A480	
130	312105-0325		4	SCREW M6S ISO 4017 M5X10 A480	
140	342931-0121		4	ELBOW 90 COUPL.,EXT.THREAD 8/6-G1/8"	
150	312115-0372		4	SCREW ISO4762 M6X25 A4 80	
TPA 1000SQ, TPA 0750SQ (See drawing on page: 5-130)					
010	2597768-0000		2	BRACKET	
020	2598486-0000		4	CLAMP	
030	2598485-0000		2	CLAMP	
040	2647131-0000		2	GUIDE	
100	315105-0153		8	WASHER BRB 6,4X12 RFR	
110	312105-0376		8	SCREW M6S ISO 4014 M6X35 A480	
120	315105-0153		4	WASHER BRB 6,4X12 RFR	
130	312105-0364		4	SCREW M6S ISO 4017 M6X10 A480	
140	342931-0121		4	ELBOW 90 COUPL.,EXT.THREAD 8/6-G1/8"	
Common Parts					
170	90166-0118	MM	1500	TUBE 8 MM PA BLACK	

Machine Type | Group Description | Used-In | Group Number | Page No

DROP CHUTE VARIANT

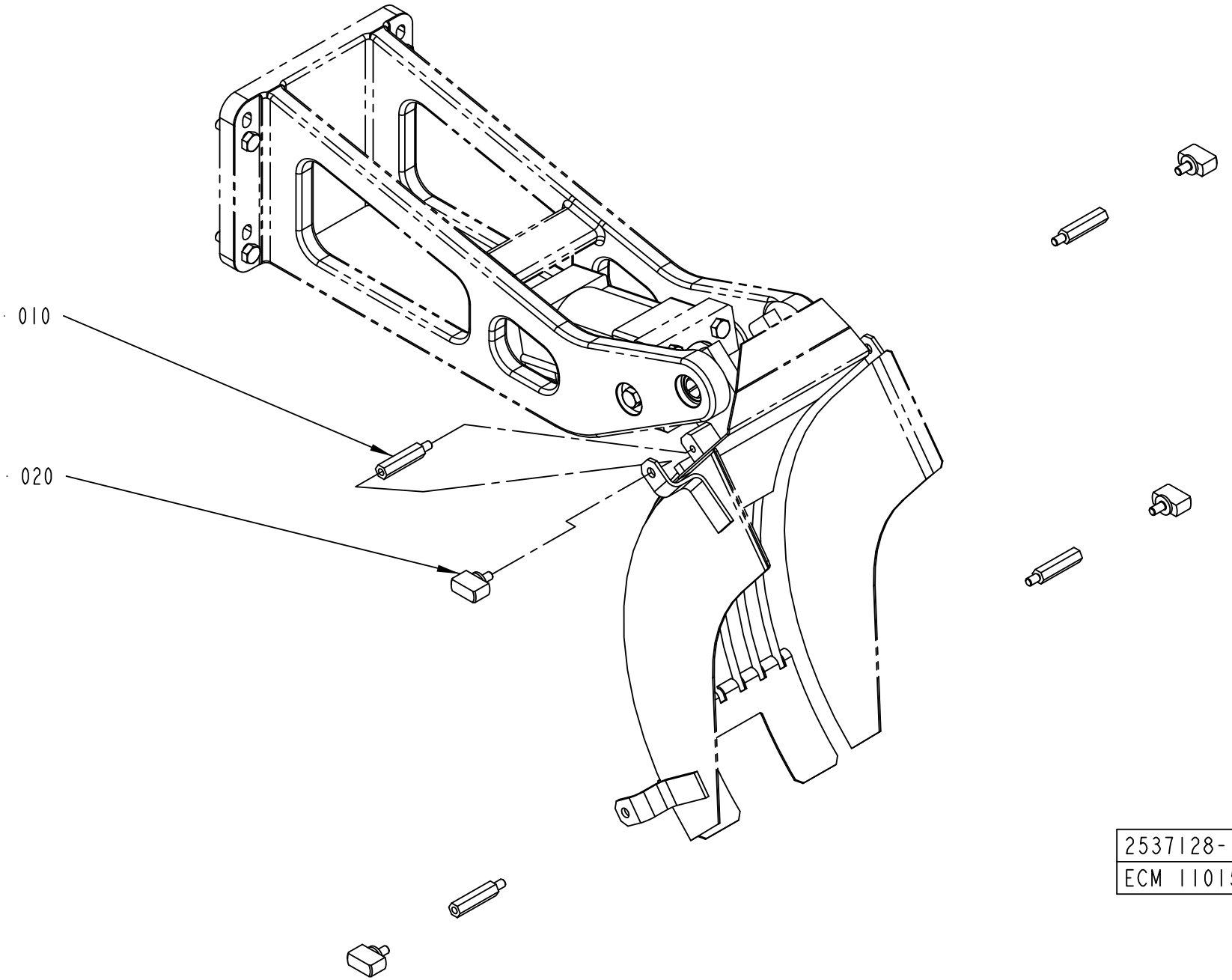

2537128-1
ECM 110157

Pos	Part No	UN	Qty	Description	Page No
TBA 0200B, TBA 0250B, TBA 0330S (See drawing on page: 5-136)					
010	1317218-0000		4	SPACER	
020	2529785-0000		4	KNOB	
TBA 0200M, TBA 0250S					
010	2522202-0000		4	SPACER	
020	2652191-0000		4	KNOB	
TBA 0200SQ, TBA 0250SQ (See drawing on page: 5-136)					
010	1317218-0000		4	SPACER	
020	2652191-0000		4	KNOB	
TBA 0500B, TBA 1000B (See drawing on page: 5-136)					
010	2537129-0000		4	SPACER	
020	2540609-0000		4	KNOB	
TBA 0500SQ, TBA 1000SQ (See drawing on page: 5-138)					
010	2598820-0000		2	SPACER	
020	2540609-0000		4	KNOB	
030	2619574-0000		2	SPACER	
TBA 1890S, TBA 2000S, TBA 1400B (See drawing on page: 5-140)					
010	2661153-0000		4	SPACER	
020	2540609-0000		4	KNOB	
040	315402-0156		4	LOCK WASHER FBB 6,5	
TPA 0250SQ, TPA 0200SQ (See drawing on page: 5-142)					
010	315105-0153		4	WASHER BRB 6,4X12 RFR	
020	2652191-0000		4	KNOB	
TPA 1000SQ, TPA 0750SQ (See drawing on page: 5-136)					
020	2540609-0000		4	KNOB	

Pos	Part No	UN	Qty	Description	Page No

DROP CHUTE VARIANT

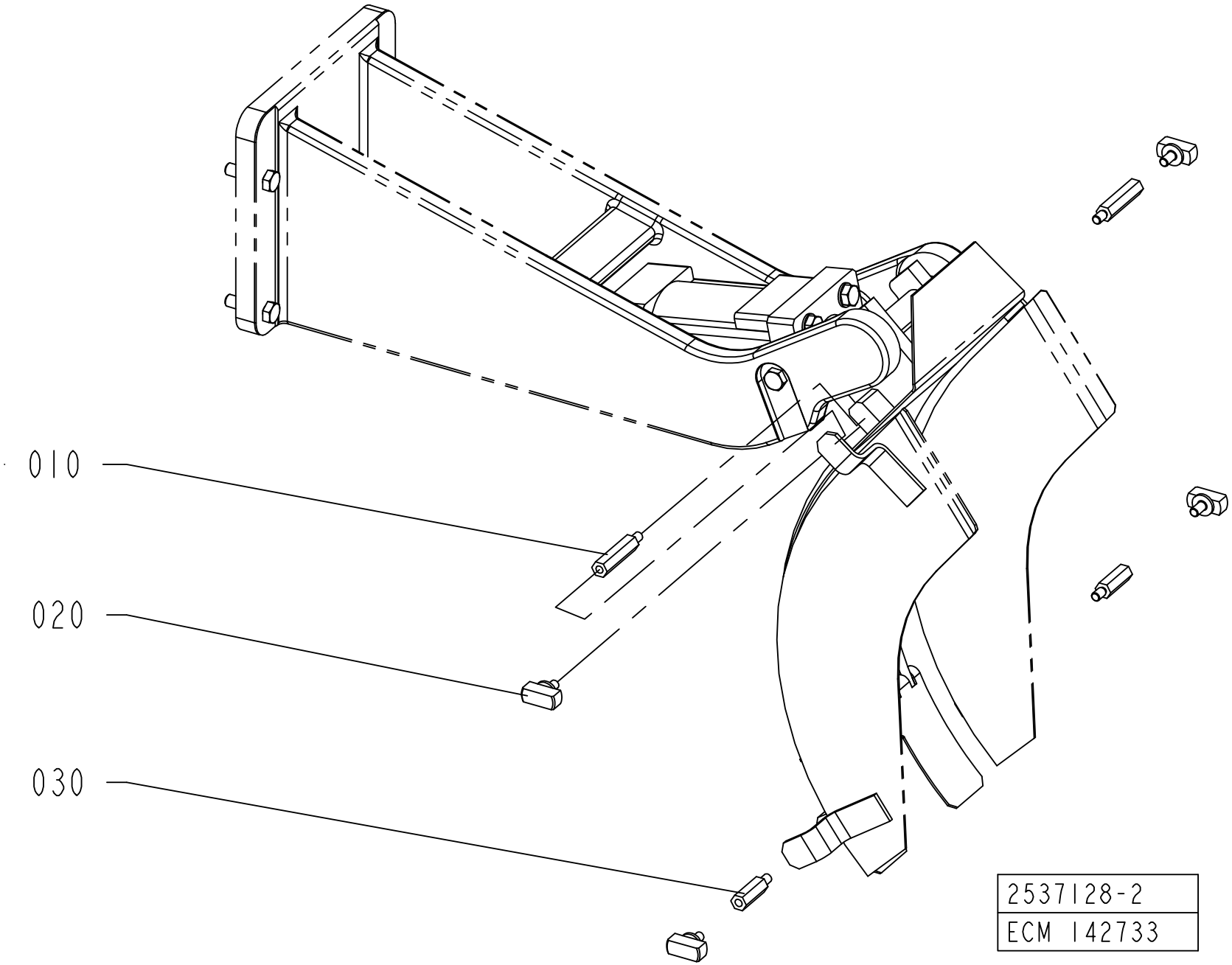

Pos	Part No	UN	Qty	Description	Page No
TBA 0200B, TBA 0250B, TBA 0330S (See drawing on page: 5-136)					
010	1317218-0000		4	SPACER	
020	2529785-0000		4	KNOB	
TBA 0200M, TBA 0250S					
010	2522202-0000		4	SPACER	
020	2652191-0000		4	KNOB	
TBA 0200SQ, TBA 0250SQ (See drawing on page: 5-136)					
010	1317218-0000		4	SPACER	
020	2652191-0000		4	KNOB	
TBA 0500B, TBA 1000B (See drawing on page: 5-136)					
010	2537129-0000		4	SPACER	
020	2540609-0000		4	KNOB	
TBA 0500SQ, TBA 1000SQ (See drawing on page: 5-138)					
010	2598820-0000		2	SPACER	
020	2540609-0000		4	KNOB	
030	2619574-0000		2	SPACER	
TBA 1890S, TBA 2000S, TBA 1400B (See drawing on page: 5-140)					
010	2661153-0000		4	SPACER	
020	2540609-0000		4	KNOB	
040	315402-0156		4	LOCK WASHER FBB 6,5	
TPA 0250SQ, TPA 0200SQ (See drawing on page: 5-142)					
010	315105-0153		4	WASHER BRB 6,4X12 RFR	
020	2652191-0000		4	KNOB	
TPA 1000SQ, TPA 0750SQ (See drawing on page: 5-136)					
020	2540609-0000		4	KNOB	

Pos	Part No	UN	Qty	Description	Page No

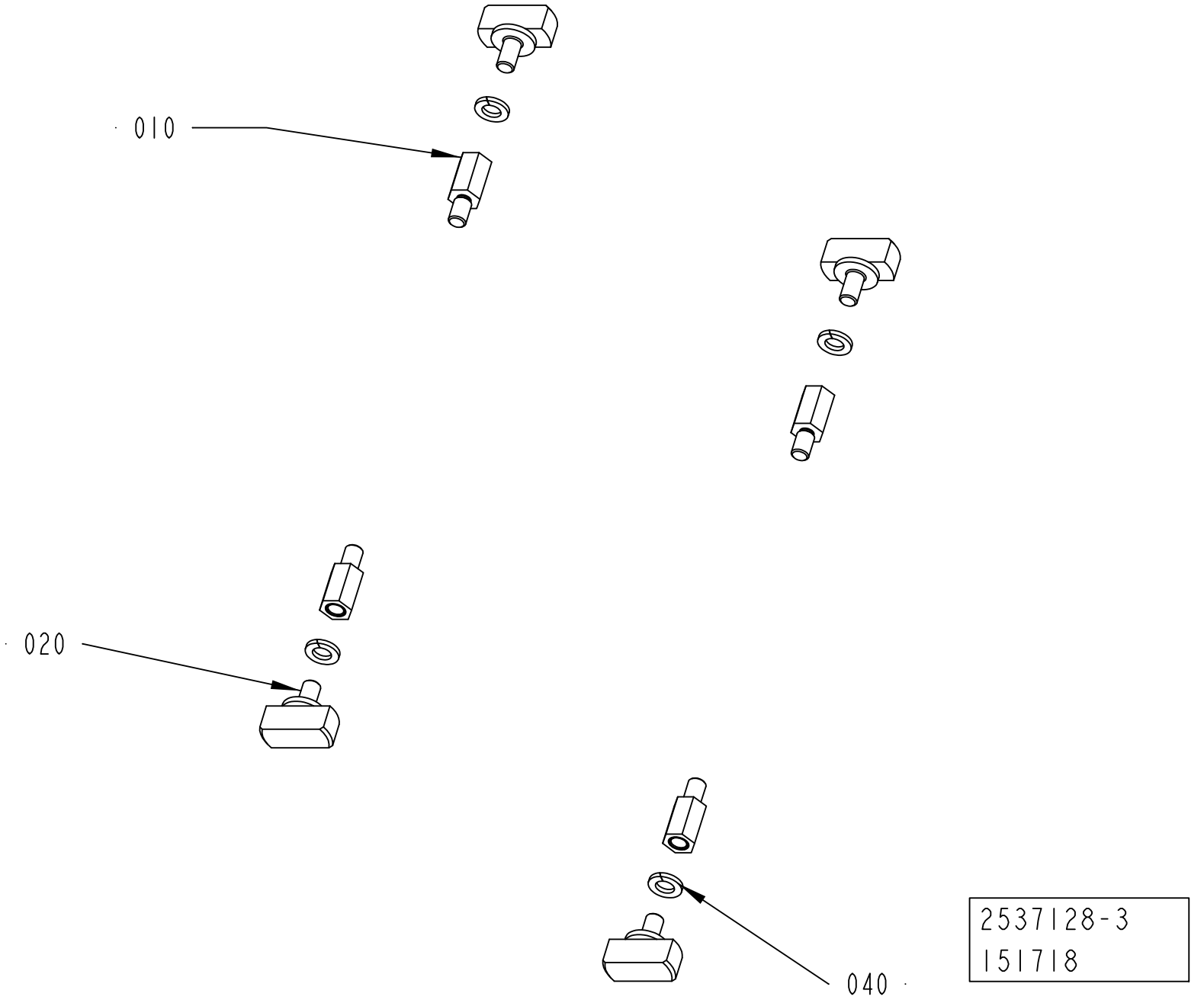
010
020
040
2537128-3
151718

Pos	Part No	UN	Qty	Description	Page No
TBA 0200B, TBA 0250B, TBA 0330S (See drawing on page: 5-136)					
010	1317218-0000		4	SPACER	
020	2529785-0000		4	KNOB	
TBA 0200M, TBA 0250S					
010	2522202-0000		4	SPACER	
020	2652191-0000		4	KNOB	
TBA 0200SQ, TBA 0250SQ (See drawing on page: 5-136)					
010	1317218-0000		4	SPACER	
020	2652191-0000		4	KNOB	
TBA 0500B, TBA 1000B (See drawing on page: 5-136)					
010	2537129-0000		4	SPACER	
020	2540609-0000		4	KNOB	
TBA 0500SQ, TBA 1000SQ (See drawing on page: 5-138)					
010	2598820-0000		2	SPACER	
020	2540609-0000		4	KNOB	
030	2619574-0000		2	SPACER	
TBA 1890S, TBA 2000S, TBA 1400B (See drawing on page: 5-140)					
010	2661153-0000		4	SPACER	
020	2540609-0000		4	KNOB	
040	315402-0156		4	LOCK WASHER FBB 6,5	
TPA 0250SQ, TPA 0200SQ (See drawing on page: 5-142)					
010	315105-0153		4	WASHER BRB 6,4X12 RFR	
020	2652191-0000		4	KNOB	
TPA 1000SQ, TPA 0750SQ (See drawing on page: 5-136)					
020	2540609-0000		4	KNOB	

Pos	Part No	UN	Qty	Description	Page No

DROP CHUTE VARIANT

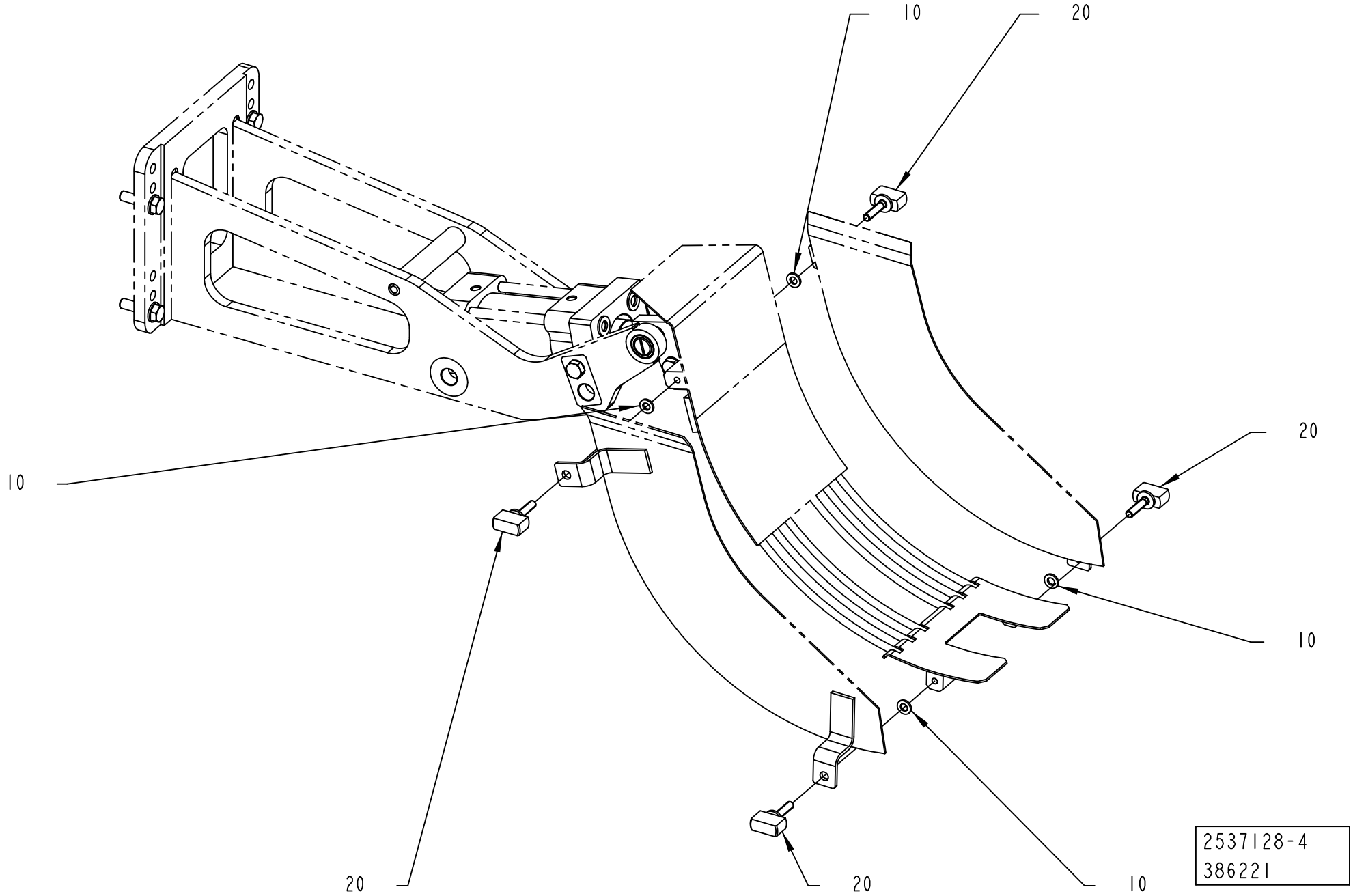

Pos	Part No	UN	Qty	Description	Page No
TBA 0200B, TBA 0250B, TBA 0330S (See drawing on page: 5-136)					
010	1317218-0000		4	SPACER	
020	2529785-0000		4	KNOB	
TBA 0200M, TBA 0250S					
010	2522202-0000		4	SPACER	
020	2652191-0000		4	KNOB	
TBA 0200SQ, TBA 0250SQ (See drawing on page: 5-136)					
010	1317218-0000		4	SPACER	
020	2652191-0000		4	KNOB	
TBA 0500B, TBA 1000B (See drawing on page: 5-136)					
010	2537129-0000		4	SPACER	
020	2540609-0000		4	KNOB	
TBA 0500SQ, TBA 1000SQ (See drawing on page: 5-138)					
010	2598820-0000		2	SPACER	
020	2540609-0000		4	KNOB	
030	2619574-0000		2	SPACER	
TBA 1890S, TBA 2000S, TBA 1400B (See drawing on page: 5-140)					
010	2661153-0000		4	SPACER	
020	2540609-0000		4	KNOB	
040	315402-0156		4	LOCK WASHER FBB 6,5	
TPA 0250SQ, TPA 0200SQ (See drawing on page: 5-142)					
010	315105-0153		4	WASHER BRB 6,4X12 RFR	
020	2652191-0000		4	KNOB	
TPA 1000SQ, TPA 0750SQ (See drawing on page: 5-136)					
020	2540609-0000		4	KNOB	

Pos	Part No	UN	Qty	Description	Page No

INFEED CONVEYOR VARIANT

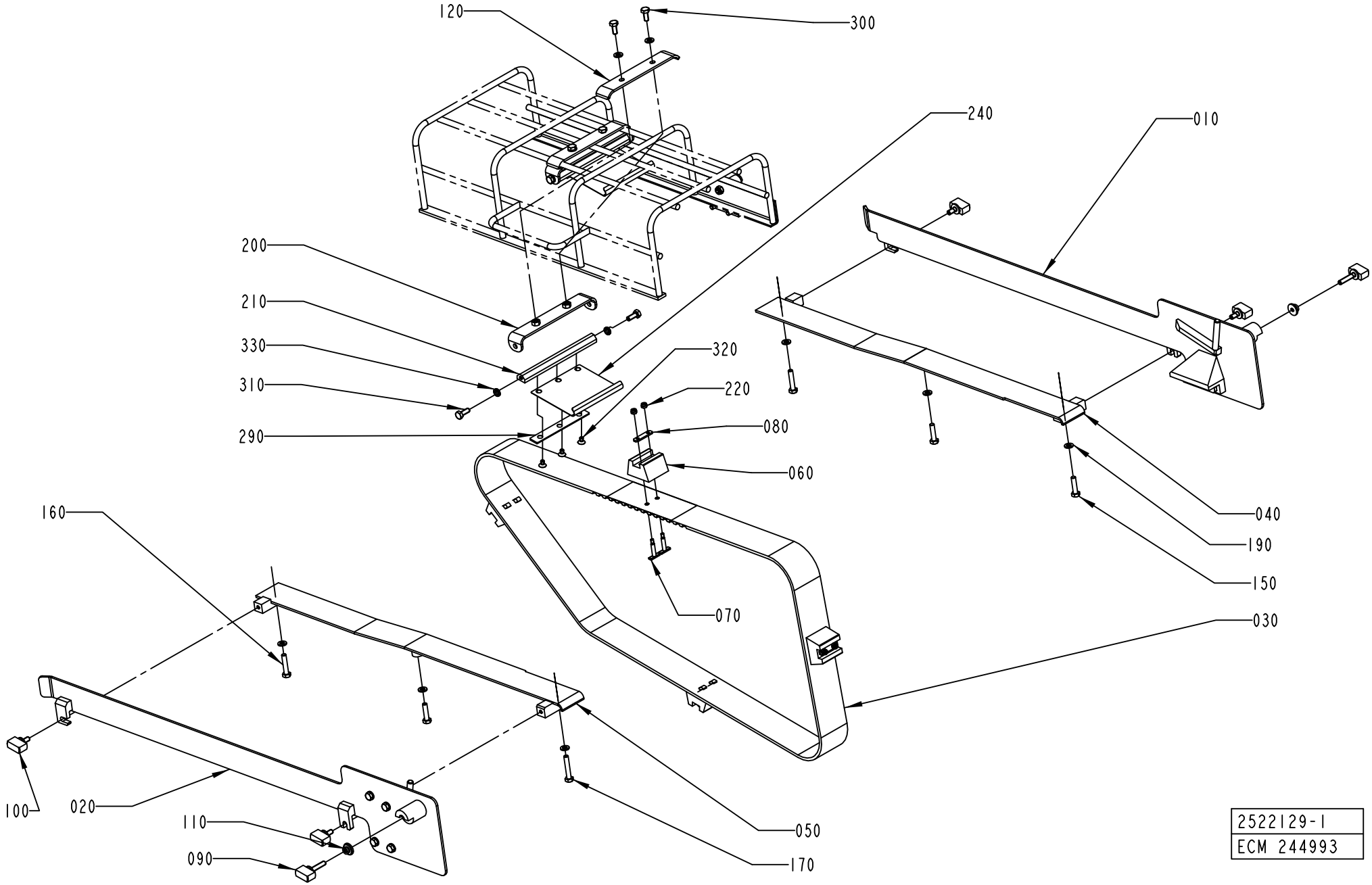

ECM: 389635 - 20090701
Group number: 2522129-0100
Assembly Drawing: 2522129-1_1_AB

This list covers pages from 5-144 to 5-151

Pos	Part No	UN	Qty	Description	Page No
TBA 0200B, TBA 0250B, TBA 0330S (See drawing on page: 5-150)					
030	1144783-0000		1	TIMING BELT	
040	1282290-0000		1	GUIDE	
050	1282291-0000		1	GUIDE	
060	1282287-0000		4	CARRIER	
070	1346736-0000		8	WEDGE	
080	1144918-0000		4	PLATE	
090	2652191-0000		2	KNOB	
100	2529786-0000		4	KNOB	
110	2520160-0000		2	CLAMP	
120	1499476-0000		1	HOLDER	
130	1499475-0000		1	HOLDER	
150	312105-0372		5	SCREW M6S ISO 4017 M6X25 A480	
160	312109-0374		2	SCREW M6S ISO 4017 M6X30 A480	
190	315105-0153		10	WASHER BRB 6,4X12 RFR	
220	312812-0312		8	HEXAGON NUT, NY-LOCK M4 A480	
230	312605-0316		2	HEXAGON NUT, M6M M6 A280	
250	90424-0068		1	AIR NOZZLE, G1/4, MOD. 216 BSP	
260	90458-2958		1	ELBOW PIPE JOINT, EXT.THREAD, D=8MM-G1/4	
270	342748-0102		1	T-CONNECTION 6MM	
280	315400-0001	MM	2820	TUBE PUN-H-6X1-BL	
285	342716-0203		2	REDUCER 6-8	
TBA 0200M, TBA 0250S (See drawing on page: 5-148)					
030	1144783-0000		1	TIMING BELT	
040	1282290-0000		1	GUIDE	
050	1282291-0000		1	GUIDE	
060	1282287-0000		4	CARRIER	
070	1346736-0000		8	WEDGE	
080	1144918-0000		4	PLATE	
090	2652191-0000		2	KNOB	
100	2529786-0000		4	KNOB	
110	2520160-0000		2	CLAMP	
120	1499476-0000		1	HOLDER	
130	1499475-0000		1	HOLDER	
150	312105-0372		5	SCREW M6S ISO 4017 M6X25 A480	
160	312109-0374		2	SCREW M6S ISO 4017 M6X30 A480	
190	315105-0153		10	WASHER BRB 6,4X12 RFR	
220	312812-0312		8	HEXAGON NUT, NY-LOCK M4 A480	
230	312605-0316		2	HEXAGON NUT, M6M M6 A280	
250	90424-0068		1	AIR NOZZLE, G1/4, MOD. 216 BSP	
260	90458-2958		1	ELBOW PIPE JOINT, EXT.THREAD, D=8MM-G1/4	
270	342728-0102		1	PIPE COUPLING 6 MM	
275	350015-0001		1	Y-FITTING QSY-F-6	
280	315400-0001	MM	700	TUBE PUN-H-6X1-BL	
285	342716-0203		1	REDUCER 6-8	
TBA 0200SQ, TBA 0250SQ (See drawing on page: 5-148)					
030	1144783-0000		1	TIMING BELT	
040	1317651-0000		1	GUIDE	
050	1317650-0000		1	GUIDE	
060	1282287-0000		4	CARRIER	
070	1346736-0000		8	WEDGE	
080	1144918-0000		4	PLATE	
090	2652191-0000		2	KNOB	
100	2529786-0000		4	KNOB	
110	2725826-0000		2	CLAMP	
115	2725827-0000		2	SPACER	
120	1499476-0000		1	HOLDER	
130	2668244-0000		1	HOLDER	
150	312105-0372		3	SCREW M6S ISO 4017 M6X25 A480	
160	312109-0374		2	SCREW M6S ISO 4017 M6X30 A480	
190	315105-0153		6	WASHER BRB 6,4X12 RFR	
220	312812-0312		8	HEXAGON NUT, NY-LOCK M4 A480	
230	312605-0316		2	HEXAGON NUT, M6M M6 A280	
250	90424-0068		1	AIR NOZZLE, G1/4, MOD. 216 BSP	
260	90458-2958		1	ELBOW PIPE JOINT, EXT.THREAD, D=8MM-G1/4	
270	342728-0102		1	PIPE COUPLING 6 MM	
275	350015-0001		1	Y-FITTING QSY-F-6	
280	315400-0001	MM	700	TUBE PUN-H-6X1-BL	
285	342716-0203		1	REDUCER 6-8	
TBA 0500B, TBA 1000B (See drawing on page: 5-144)					
030	1144783-0000		1	TIMING BELT	
040	2779739-0000		1	GUIDE	
050	2779738-0000		1	GUIDE	
060	1144919-0000		4	CARRIER	
070	1346471-0000		8	WEDGE	
080	1144918-0000		4	PLATE	
090	2529785-0000		2	KNOB	
100	2529786-0000		4	KNOB	
110	2520160-0000		2	CLAMP	
120	1499476-0000		1	HOLDER	
150	312105-0372		3	SCREW M6S ISO 4017 M6X25 A480	
160	312109-0374		2	SCREW M6S ISO 4017 M6X30 A480	
190	315105-0153		10	WASHER BRB 6,4X12 RFR	
200	2527792-0000		1	SUPPORT	

Machine Type | Group Description | Used-In | Group Number | Page No

INFEED CONVEYOR VARIANT

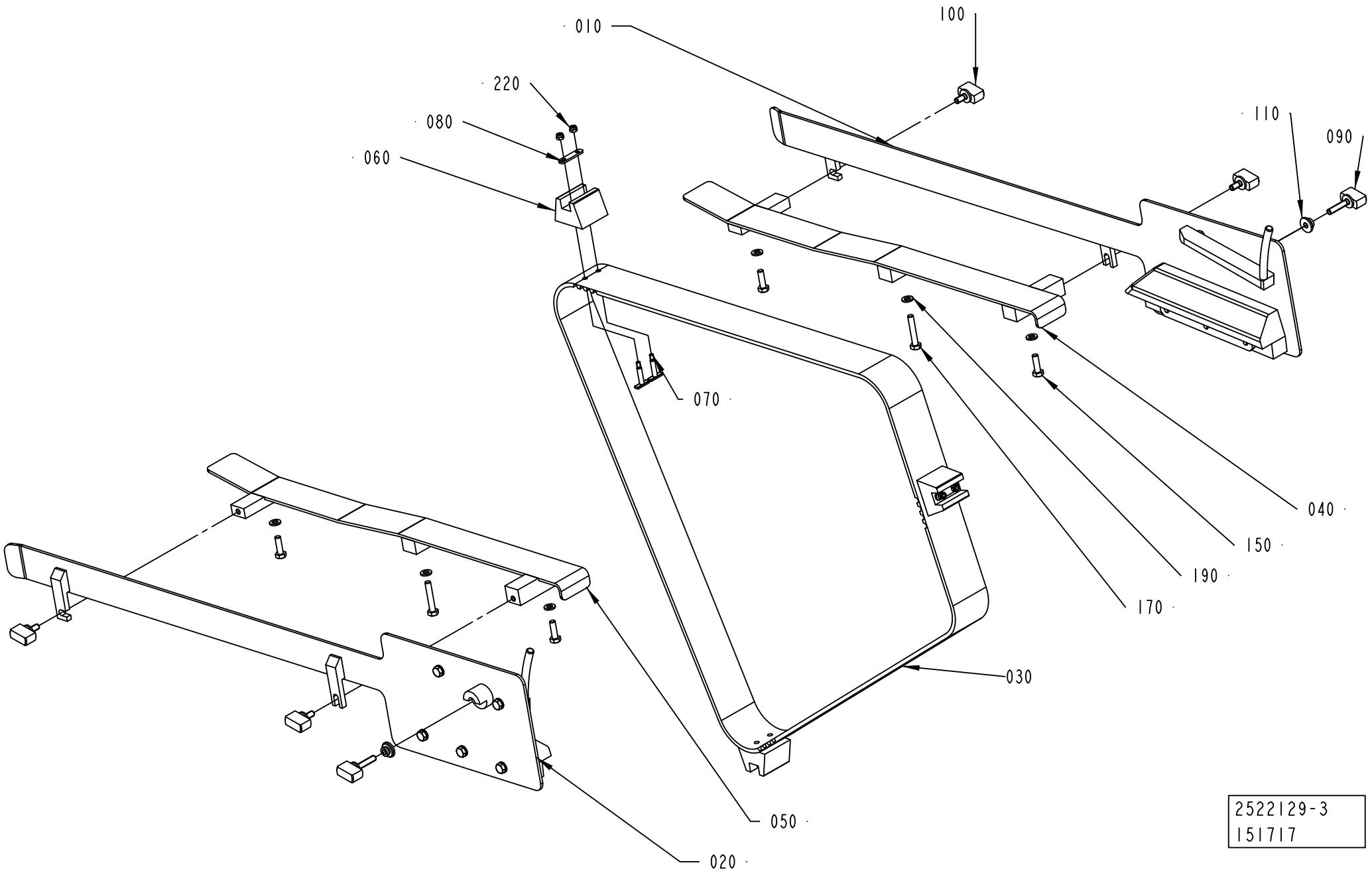

ECM: 389635 - 20090701
Group number: 2522129-0100
Assembly Drawing: 2522129-3_1_AA

This list covers pages from 5-144 to 5-151

Pos	Part No	UN	Qty	Description	Page No
TBA 0500B, TBA 1000B (Cont'd) (See drawing on page: 5-144)					
210	2527793-0000		1	SHAFT	
220	312812-0312		8	HEXAGON NUT, NY-LOCK M4 A480	
240	2530418-0000		1	SPRING	
290	2540612-0000		1	PLATE	
300	312105-0367		2	SCREW M6S ISO 4017 M6X14 A480	
310	312105-0368		2	SCREW M6S ISO 4017 M6X16 A480	
320	312155-0323		3	SCREW DIN 7991 MF6S M5X8 A4 70	
330	90062-0061		2	LOCK WASHER NORD-LOCK,6,5/10,8, T=2,2	
TBA 0500SQ, TBA 1000SQ (See drawing on page: 5-144)					
030	1144783-0000		1	TIMING BELT	
040	1317651-0000		1	GUIDE	
050	1317650-0000		1	GUIDE	
060	1282848-0000		4	CARRIER	
070	1346471-0000		8	WEDGE	
080	1144918-0000		4	PLATE	
090	2529785-0000		2	KNOB	
100	2529786-0000		4	KNOB	
110	2520160-0000		2	CLAMP	
120	1499476-0000		2	HOLDER	
150	312105-0372		3	SCREW M6S ISO 4017 M6X25 A480	
160	312109-0374		2	SCREW M6S ISO 4017 M6X30 A480	
190	315105-0153		10	WASHER BRB 6,4X12 RFR	
200	2527792-0000		2	SUPPORT	
210	2527793-0000		2	SHAFT	
220	312812-0312		8	HEXAGON NUT, NY-LOCK M4 A480	
240	2530418-0000		1	SPRING	
290	2540612-0000		2	PLATE	
300	312105-0367		4	SCREW M6S ISO 4017 M6X14 A480	
310	312105-0368		4	SCREW M6S ISO 4017 M6X16 A480	
320	312155-0323		6	SCREW DIN 7991 MF6S M5X8 A4 70	
330	90062-0061		4	LOCK WASHER NORD-LOCK,6,5/10,8, T=2,2	
TBA 1890S, TBA 2000S, TBA 1400B (See drawing on page: 5-146)					
030	1349152-0000		1	TIMING BELT	
040	2665201-0000		1	GUIDE	
050	2665200-0000		1	GUIDE	
060	1282848-0000		3	CARRIER	
070	1346471-0000		6	WEDGE	
080	1144918-0000		3	PLATE	
090	2529785-0000		2	KNOB	
100	2529786-0000		4	KNOB	
110	2520160-0000		2	CLAMP	
150	312105-0370		4	SCREW M6S ISO 4017 M6X20 A480	
190	315105-0153		6	WASHER BRB 6,4X12 RFR	
220	312812-0312		6	HEXAGON NUT, NY-LOCK M4 A480	
TPA 0250SQ, TPA 0200SQ (See drawing on page: 5-148)					
030	1144783-0000		1	TIMING BELT	
040	1317651-0000		1	GUIDE	
050	1317650-0000		1	GUIDE	
060	1282287-0000		4	CARRIER	
070	1346736-0000		8	WEDGE	
080	1144918-0000		4	PLATE	
090	2652191-0000		2	KNOB	
100	2529786-0000		4	KNOB	
110	2725826-0000		2	CLAMP	
115	2725827-0000		2	SPACER	
120	1499476-0000		1	HOLDER	
130	2668244-0000		1	HOLDER	
150	312105-0372		5	SCREW M6S ISO 4017 M6X25 A480	
160	312109-0374		2	SCREW M6S ISO 4017 M6X30 A480	
190	315105-0153		10	WASHER BRB 6,4X12 RFR	
220	312812-0312		8	HEXAGON NUT, NY-LOCK M4 A480	
230	312605-0316		2	HEXAGON NUT, M6M M6 A280	
250	90424-0068		1	AIR NOZZLE, G1/4, MOD. 216 BSP	
260	90458-2958		1	ELBOW PIPE JOINT, EXT.THREAD, D=8MM-G1/4	
270	342728-0102		1	PIPE COUPLING 6 MM	
275	350015-0001		1	Y-FITTING QSY-F-6	
280	315400-0001	MM	700	TUBE PUN-H-6X1-BL	
285	342716-0203		1	REDUCER 6-8	
TPA 1000SQ, TPA 0750SQ (See drawing on page: 5-144)					
030	1519338-0000		1	TIMING BELT	
040	1519346-0000		1	GUIDE	
050	1519345-0000		1	GUIDE	
060	1519344-0000		3	CARRIER	
070	1517476-0000		6	WEDGE	
080	1517477-0000		3	PLATE	
090	2529785-0000		2	KNOB	
100	2529786-0000		4	KNOB	
110	2520160-0000		2	CLAMP	
150	312105-0372		3	SCREW M6S ISO 4017 M6X25 A480	
160	312109-0374		2	SCREW M6S ISO 4017 M6X30 A480	
190	315105-0153		6	WASHER BRB 6,4X12 RFR	
220	312812-0312		6	HEXAGON NUT, NY-LOCK M4 A480	
Common Parts					

Machine Type	Group Description	Used-In	Group Number	Page No

INFEED CONVEYOR VARIANT

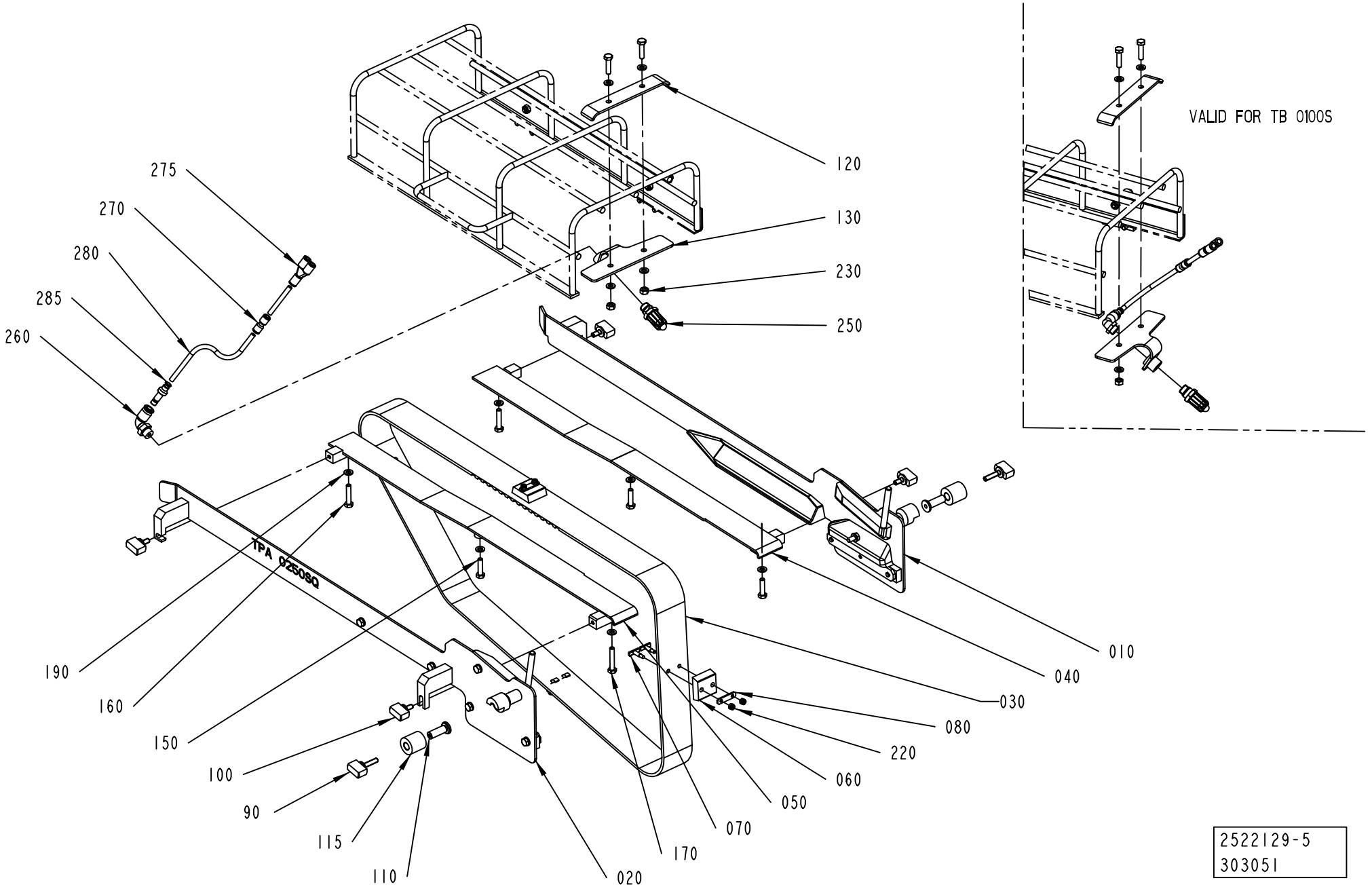

2522129-5
303051

Pos	Part No	UN	Qty	Description	Page No
Common Parts (Cont'd)					
010	2527704-0100		1	GUIDE	**5-153, 5-155, 5-157, 5-159**
020	2527703-0100		1	GUIDE	**5-161, 5-163, 5-165, 5-167**
170	312109-0376		1	SCREW M6S ISO 4017 M6X35 A480	

Pos	Part No	UN	Qty	Description	Page No

INFEED CONVEYOR VARIANT

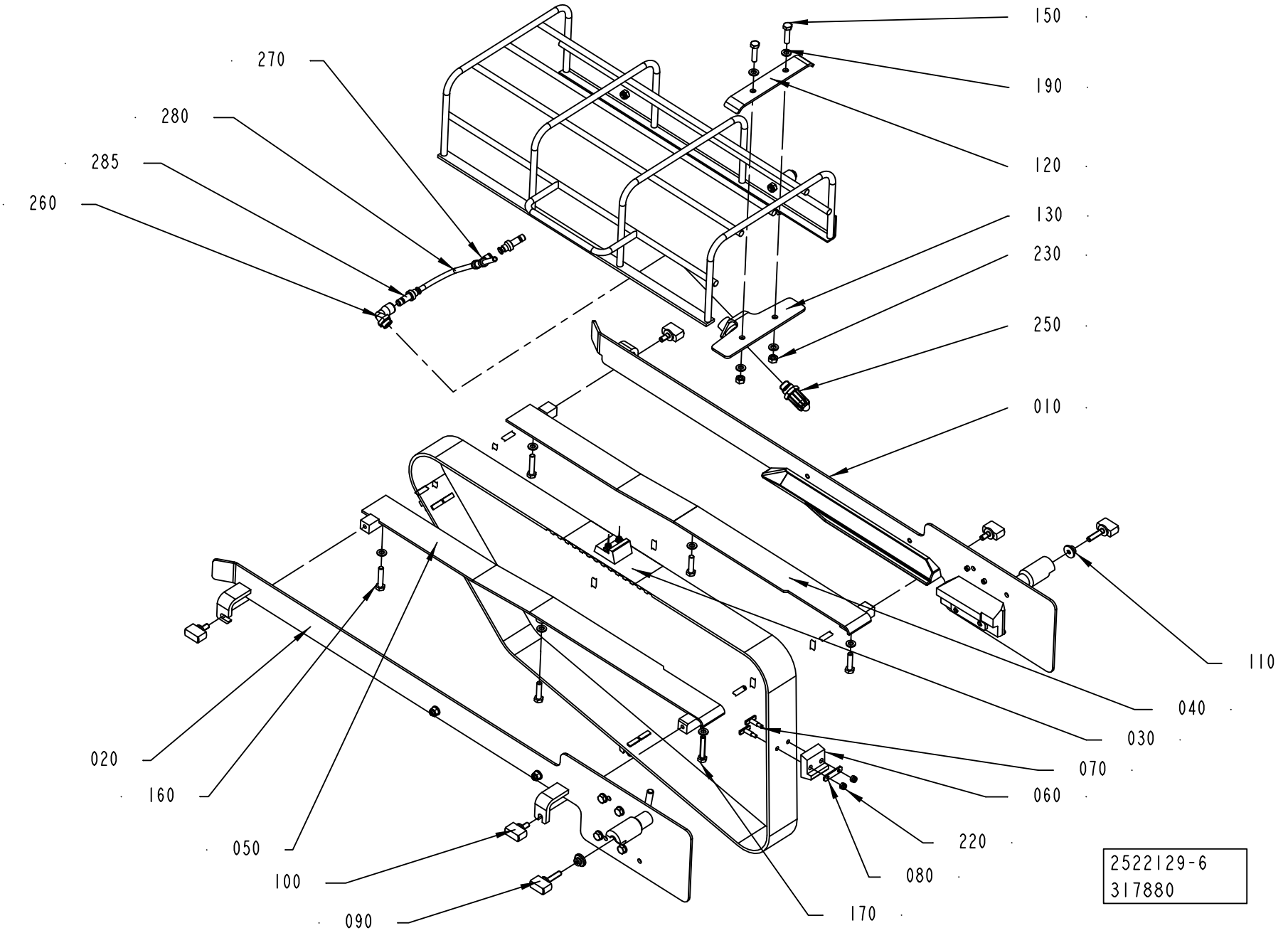

Pos	Part No	UN	Qty	Description	Page No
SEE PREVIOUS LISTS PAGES: 5-145, 5-147, 5-149.					

Pos	Part No	UN	Qty	Description	Page No

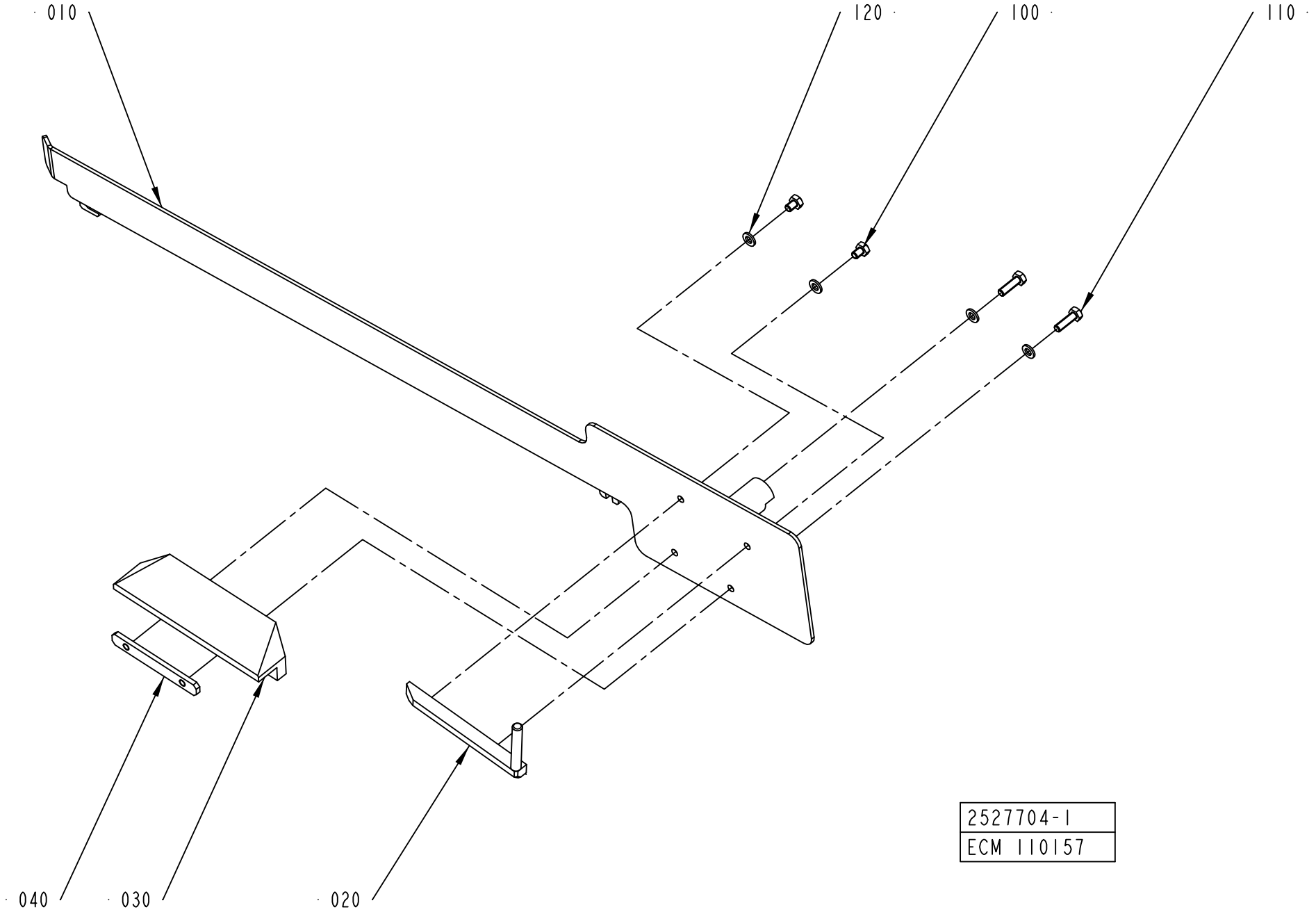
010
120
100
110
040
030
020
2527704-1
ECM 110157

ECM: 344755 - 20080702
Group number: 2527704-0100
Assembly Drawing: 2527704-1_1_AA

This list covers pages from 5-152 to 5-159

Pos	Part No	UN	Qty	Description	Page No
TBA 0250SQ (See drawing on page: 5-158)					
010	2668224-0000		1	GUIDE	
020	2668232-0000		1	BAR	
030	2668233-0000		1	SLIDE	
040	1348169-0000		1	PLATE	
050	2668225-0000		1	GUIDE	
100	312105-0364		2	SCREW M6S ISO 4017 M6X10 A480	
110	312105-0370		2	SCREW M6S ISO 4017 M6X20 A480	
120	315105-0153		6	WASHER BRB 6,4X12 RFR	
140	312105-0364		2	SCREW M6S ISO 4017 M6X10 A480	
TBA 0330S (See drawing on page: 5-154)					
010	2526578-0000		1	GUIDE	
020	2545000-0000		1	BAR	
030	2544997-0000		1	SLIDE	
040	1279409-0000		1	PLATE	
050	2664200-0000		1	GUIDE	
100	312105-0366		2	SCREW M6S ISO 4017 M6X12 A480	
120	315105-0153		6	WASHER BRB 6,4X12 RFR	
130	312605-0316		2	HEXAGON NUT, M6M M6 A280	
TBA 0500B (See drawing on page: 5-152)					
010	2522166-0000		1	GUIDE	
020	1539877-0000		1	BAR	
030	1539874-0000		1	SLIDE	
040	1539876-0000		1	PLATE	
100	312105-0366		2	SCREW M6S ISO 4017 M6X12 A480	
110	312105-0370		2	SCREW M6S ISO 4017 M6X20 A480	
120	315105-0153		6	WASHER BRB 6,4X12 RFR	
TBA 0500SQ (See drawing on page: 5-156)					
010	2848493-0000		1	GUIDE	
020	2529277-0000		1	BAR	
030	2860106-0000		1	SLIDE	
040	2529279-0000		1	PLATE	
050	2619728-0000		1	GUIDE	
100	312105-0366		2	SCREW M6S ISO 4017 M6X12 A480	
110	312105-0370		2	SCREW M6S ISO 4017 M6X20 A480	
120	315105-0153		6	WASHER BRB 6,4X12 RFR	
130	312105-0366		2	SCREW M6S ISO 4017 M6X12 A480	
TBA 1000B (See drawing on page: 5-152)					
010	2518129-0000		1	GUIDE	
020	1348144-0000		1	BAR	
030	1348133-0000		1	SLIDE	
040	1279409-0000		1	PLATE	
100	312105-0366		2	SCREW M6S ISO 4017 M6X12 A480	
110	312105-0370		2	SCREW M6S ISO 4017 M6X20 A480	
120	315105-0153		6	WASHER BRB 6,4X12 RFR	
TBA 1000SQ (See drawing on page: 5-152)					
010	2848491-0000		1	GUIDE	
020	1490035-0000		1	BAR	
030	1490033-0000		1	SLIDE	
040	1144621-0000		1	PLATE	
100	312105-0366		2	SCREW M6S ISO 4017 M6X12 A480	
110	312105-0370		2	SCREW M6S ISO 4017 M6X20 A480	
120	315105-0153		4	WASHER BRB 6,4X12 RFR	
TBA 1400B (See drawing on page: 5-152)					
010	2771438-0000		1	GUIDE	
020	2776826-0000		1	BAR	
030	2771440-0000		1	SLIDE	
040	2771439-0000		1	PLATE	
100	312105-0366		2	SCREW M6S ISO 4017 M6X12 A480	
110	312109-0374		2	SCREW M6S ISO 4017 M6X30 A480	
120	315105-0153		4	WASHER BRB 6,4X12 RFR	
TBA 1890S (See drawing on page: 5-152)					
010	2665202-0000		1	GUIDE	
020	1317805-0000		1	BAR	
030	2594905-0000		1	SLIDE	
040	1144621-0000		1	PLATE	
100	312105-0366		2	SCREW M6S ISO 4017 M6X12 A480	
110	312109-0374		3	SCREW M6S ISO 4017 M6X30 A480	
120	315105-0153		5	WASHER BRB 6,4X12 RFR	
TBA 2000S (See drawing on page: 5-152)					
010	2678622-0000		1	GUIDE	
020	1317805-0000		1	BAR	
030	2598487-0000		1	SLIDE	
040	1144621-0000		1	PLATE	
100	312105-0366		2	SCREW M6S ISO 4017 M6X12 A480	
110	312109-0374		3	SCREW M6S ISO 4017 M6X30 A480	
120	315105-0153		5	WASHER BRB 6,4X12 RFR	
TPA 0200SQ (See drawing on page: 5-154)					
010	2674250-0000		1	GUIDE	
020	2674251-0000		1	BAR	
030	2674252-0000		1	SLIDE	
040	2674248-0000		1	PLATE	
050	1539894-0000		1	GUIDE	
100	312105-0366		2	SCREW M6S ISO 4017 M6X12 A480	

Machine Type | Group Description | Used-In | Group Number | Page No

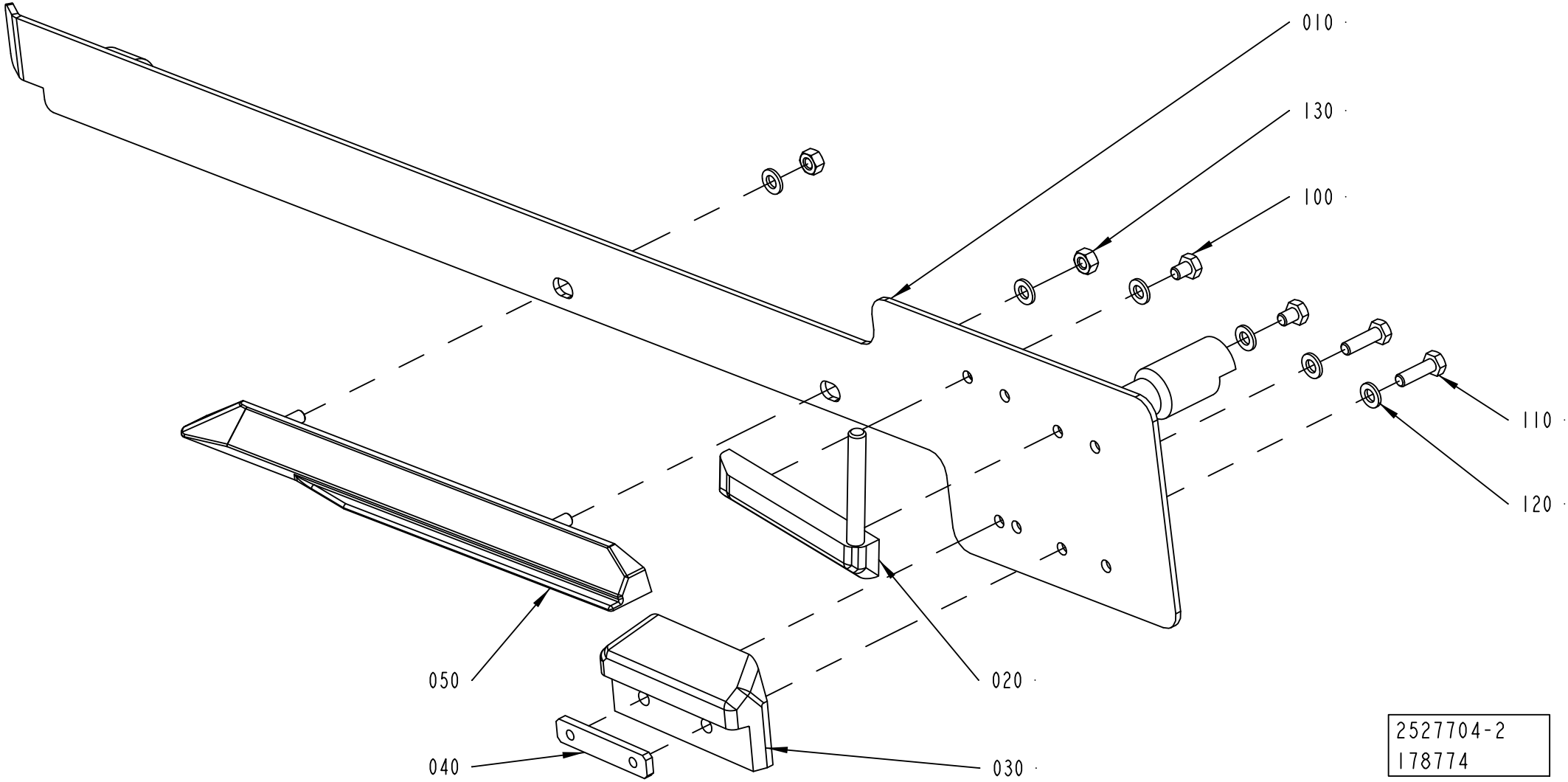
010
130
100
110
120
050
020
040
030
2527704-2
178774

Pos	Part No	UN	Qty	Description	Page No
TPA 0200SQ (Cont'd) (See drawing on page: 5-154)					
110	312105-0370		2	SCREW M6S ISO 4017 M6X20 A480	
120	315105-0153		6	WASHER BRB 6,4X12 RFR	
130	312105-0366		2	SCREW M6S ISO 4017 M6X12 A480	
TPA 0250SQ (See drawing on page: 5-154)					
010	2674249-0000		1	GUIDE	
020	1549854-0000		1	BAR	
030	1549852-0000		1	SLIDE	
040	1144621-0000		1	PLATE	
050	1539894-0000		1	GUIDE	
100	312105-0366		2	SCREW M6S ISO 4017 M6X12 A480	
110	312105-0370		2	SCREW M6S ISO 4017 M6X20 A480	
120	315105-0153		6	WASHER BRB 6,4X12 RFR	
130	312105-0366		2	SCREW M6S ISO 4017 M6X12 A480	
TPA 0750SQ (See drawing on page: 5-158)					
010	2647087-0000		1	GUIDE	
020	2647088-0000		1	BAR	
030	2647090-0000		1	SLIDE	
040	2647092-0000		1	ANGLE BLOCK	
050	2637665-0000		1	GUIDE	
100	312105-0364		2	SCREW M6S ISO 4017 M6X10 A480	
110	312105-0368		4	SCREW M6S ISO 4017 M6X16 A480	
120	315105-0153		6	WASHER BRB 6,4X12 RFR	
TPA 1000SQ (See drawing on page: 5-158)					
010	2647083-0000		1	GUIDE	
020	2647084-0000		1	BAR	
030	2675323-0000		1	SLIDE	
040	2543242-0000		1	ANGLE BLOCK	
050	2637665-0000		1	GUIDE	
100	312105-0364		2	SCREW M6S ISO 4017 M6X10 A480	
110	312105-0368		4	SCREW M6S ISO 4017 M6X16 A480	
120	315105-0153		6	WASHER BRB 6,4X12 RFR	
TBA 0200B (See drawing on page: 5-154)					
010	2526578-0000		1	GUIDE	
020	1348148-0000		1	BAR	
030	1348136-0000		1	SLIDE	
040	1348169-0000		1	PLATE	
050	2664200-0000		1	GUIDE	
100	312105-0366		2	SCREW M6S ISO 4017 M6X12 A480	
120	315105-0153		6	WASHER BRB 6,4X12 RFR	
130	312605-0316		2	HEXAGON NUT, M6M M6 A280	
TBA 0200M (See drawing on page: 5-154)					
010	2657937-0000		1	GUIDE	
020	2657932-0000		1	BAR	
030	2657935-0000		1	SLIDE	
040	1348169-0000		1	PLATE	
050	1517526-0000		1	GUIDE	
100	312105-0366		2	SCREW M6S ISO 4017 M6X12 A480	
110	312105-0370		2	SCREW M6S ISO 4017 M6X20 A480	
120	315105-0153		6	WASHER BRB 6,4X12 RFR	
130	312605-0316		2	HEXAGON NUT, M6M M6 A280	
TBA 0200SQ (See drawing on page: 5-158)					
010	2752647-0000		1	GUIDE	
020	2668226-0000		1	BAR	
030	2668227-0000		1	SLIDE	
040	1348169-0000		1	PLATE	
050	2668225-0000		1	GUIDE	
100	312105-0364		2	SCREW M6S ISO 4017 M6X10 A480	
110	312105-0370		2	SCREW M6S ISO 4017 M6X20 A480	
120	315105-0153		6	WASHER BRB 6,4X12 RFR	
140	312105-0364		2	SCREW M6S ISO 4017 M6X10 A480	
TBA 0250B (See drawing on page: 5-154)					
010	2526578-0000		1	GUIDE	
020	1348147-0000		1	BAR	
030	1348135-0000		1	SLIDE	
040	1348169-0000		1	PLATE	
050	2664200-0000		1	GUIDE	
100	312105-0366		2	SCREW M6S ISO 4017 M6X12 A480	
120	315105-0153		6	WASHER BRB 6,4X12 RFR	
130	312605-0316		2	HEXAGON NUT, M6M M6 A280	
TBA 0250S (See drawing on page: 5-154)					
010	2657937-0000		1	GUIDE	
020	2529608-0000		1	BAR	
030	2529605-0000		1	SLIDE	
040	1279409-0000		1	PLATE	
050	1517526-0000		1	GUIDE	
100	312105-0366		2	SCREW M6S ISO 4017 M6X12 A480	
110	312105-0370		2	SCREW M6S ISO 4017 M6X20 A480	
120	315105-0153		6	WASHER BRB 6,4X12 RFR	
130	312605-0316		2	HEXAGON NUT, M6M M6 A280	

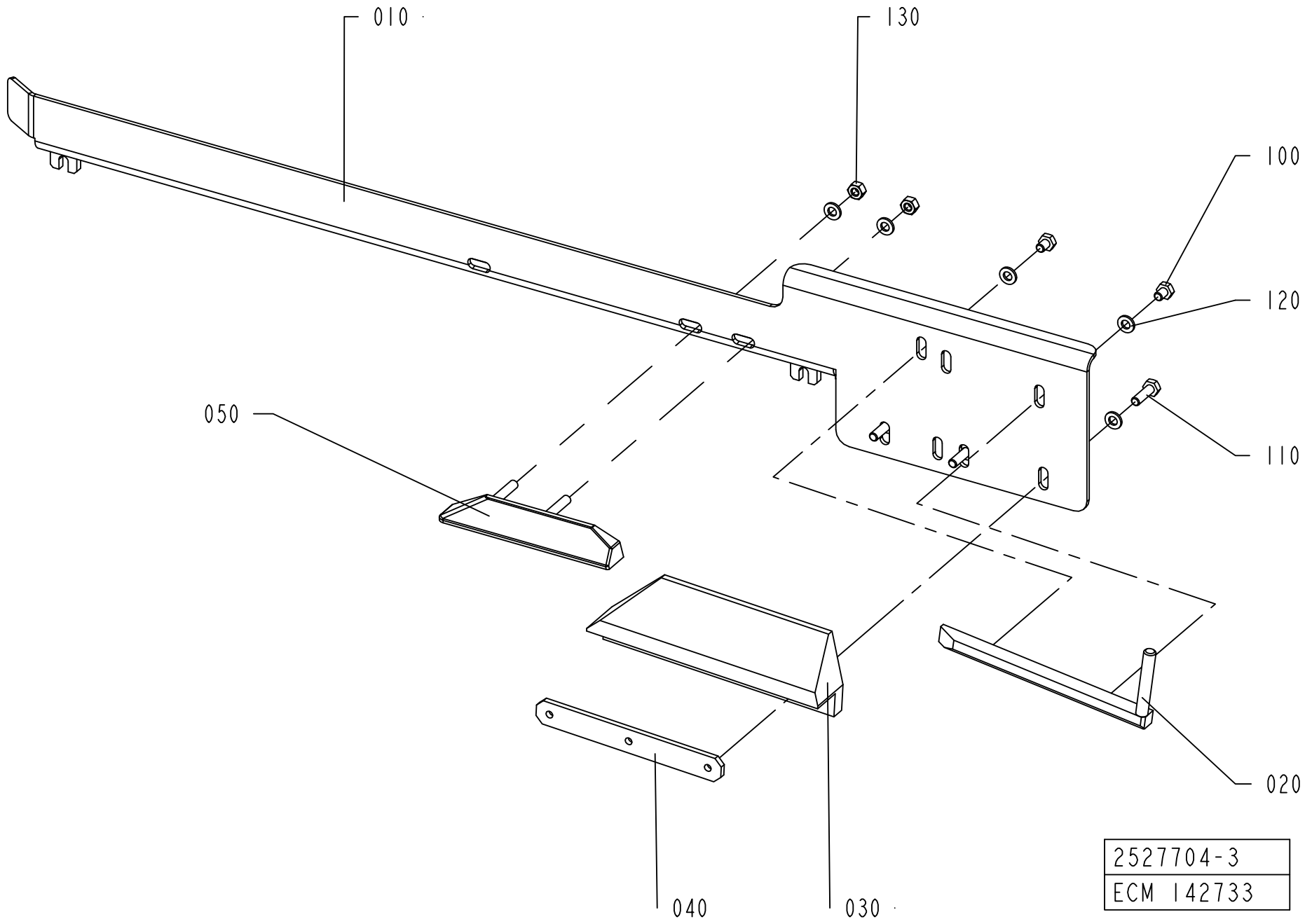
010
130
100
120
110
050
020
040
030
2527704-3
ECM 142733

Pos	Part No	UN	Qty	Description	Page No
SEE PREVIOUS LISTS PAGES: 5-153, 5-155.					

Pos	Part No	UN	Qty	Description	Page No

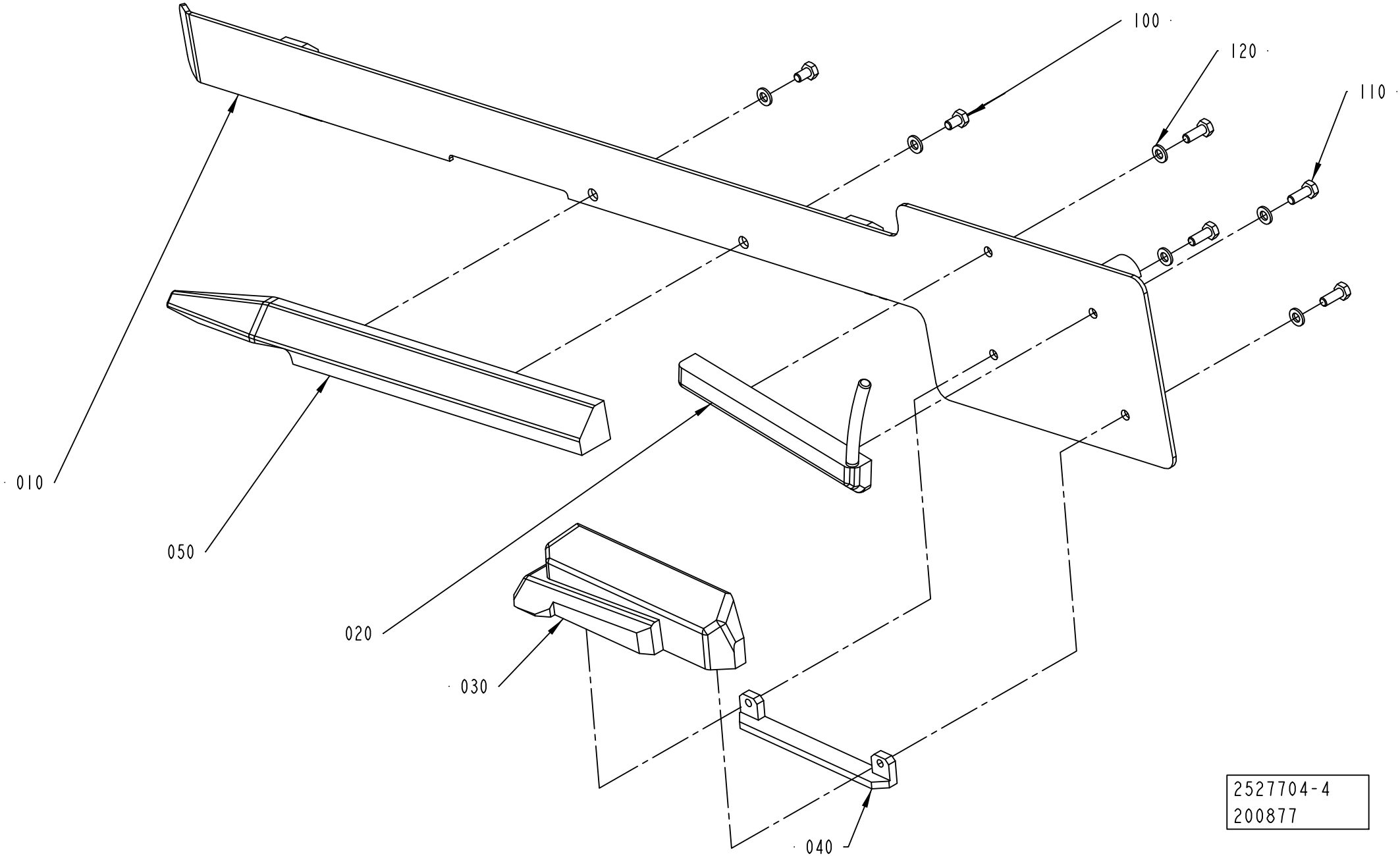
100
120
110
010
050
020
030
040
2527704-4
200877

Pos	Part No	UN	Qty	Description	Page No
SEE PREVIOUS LISTS PAGES: 5-153, 5-155.					

Pos	Part No	UN	Qty	Description	Page No

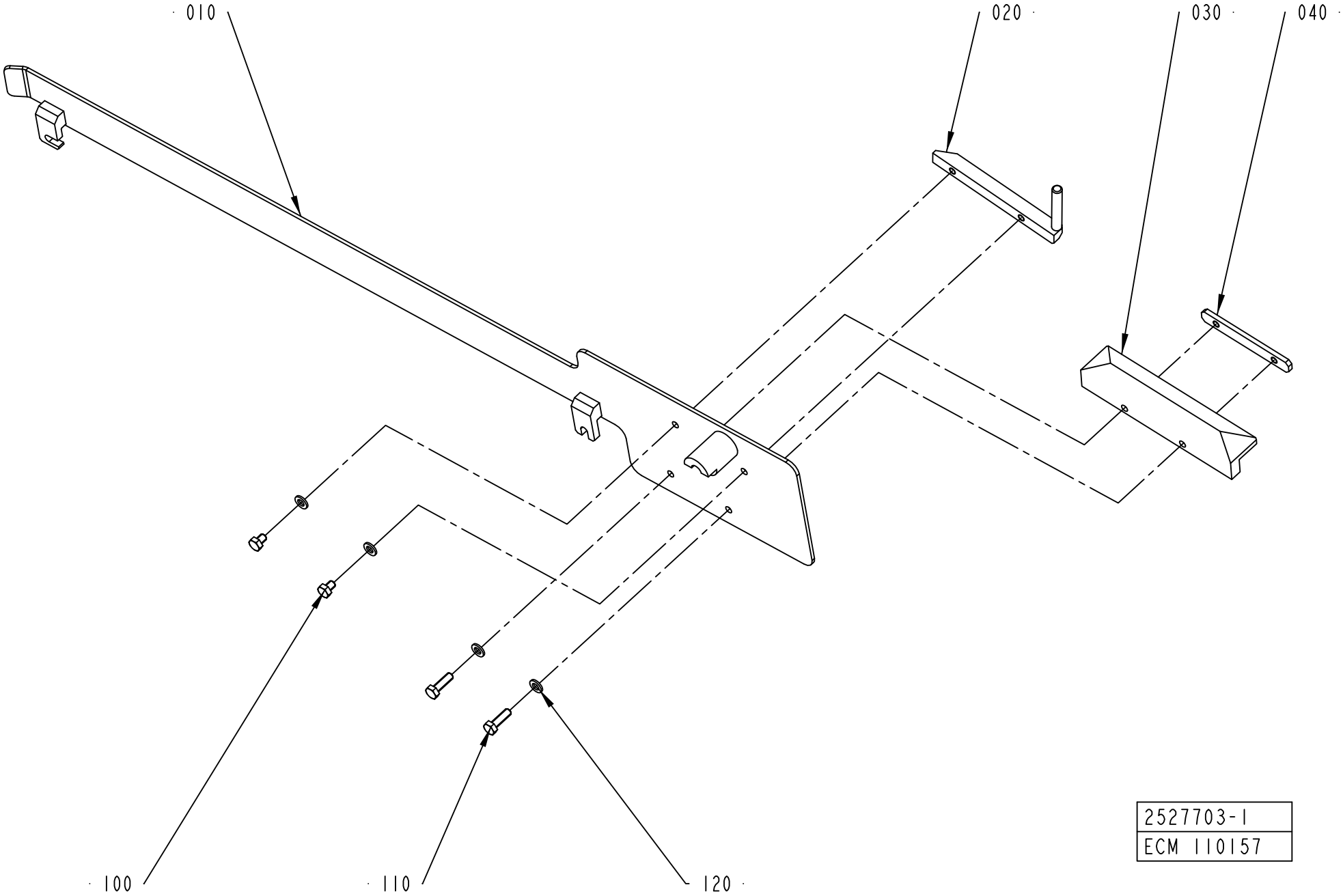
010
020
030
040
100
110
120
2527703-1
ECM 110157

ECM: 344754 - 20080702
Group number: 2527703-0100
Assembly Drawing: 2527703-1_1_AA

This list covers pages from 5-160 to 5-167

Pos	Part No	UN	Qty	Description	Page No
TBA 0250S (See drawing on page: 5-162)					
010	2657936-0000		1	GUIDE	
020	2529607-0000		1	BAR	
030	2529606-0000		1	SLIDE	
040	1279409-0000		1	PLATE	
050	1517527-0000		1	GUIDE	
100	312105-0366		2	SCREW M6S ISO 4017 M6X12 A480	
110	312105-0370		2	SCREW M6S ISO 4017 M6X20 A480	
120	315105-0153		6	WASHER BRB 6,4X12 RFR	
130	312605-0316		2	HEXAGON NUT, M6M M6 A280	
TBA 0250SQ (See drawing on page: 5-166)					
010	2668228-0000		1	GUIDE	
020	2668234-0000		1	BAR	
030	2668235-0000		1	SLIDE	
040	1348169-0000		1	PLATE	
050	2668229-0000		1	GUIDE	
100	312105-0366		2	SCREW M6S ISO 4017 M6X12 A480	
110	312105-0370		2	SCREW M6S ISO 4017 M6X20 A480	
120	315105-0153		6	WASHER BRB 6,4X12 RFR	
140	312105-0364		2	SCREW M6S ISO 4017 M6X10 A480	
TBA 0330S (See drawing on page: 5-162)					
010	2526579-0000		1	GUIDE	
020	2544999-0000		1	BAR	
030	2544998-0000		1	SLIDE	
040	1279409-0000		1	PLATE	
050	2664201-0000		1	GUIDE	
100	312105-0366		2	SCREW M6S ISO 4017 M6X12 A480	
110	312105-0370		2	SCREW M6S ISO 4017 M6X20 A480	
120	315105-0153		6	WASHER BRB 6,4X12 RFR	
130	312605-0316		2	HEXAGON NUT, M6M M6 A280	
TBA 0500B (See drawing on page: 5-160)					
010	2522167-0000		1	GUIDE	
020	1539878-0000		1	BAR	
030	1539875-0000		1	SLIDE	
040	1539876-0000		1	PLATE	
100	312105-0366		2	SCREW M6S ISO 4017 M6X12 A480	
110	312105-0370		2	SCREW M6S ISO 4017 M6X20 A480	
120	315105-0153		6	WASHER BRB 6,4X12 RFR	
TBA 0500SQ (See drawing on page: 5-164)					
010	2848492-0000		1	GUIDE	
020	2529278-0000		1	BAR	
030	2860107-0000		1	SLIDE	
040	2529279-0000		1	PLATE	
050	2619727-0000		1	GUIDE	
100	312105-0366		2	SCREW M6S ISO 4017 M6X12 A480	
110	312105-0370		2	SCREW M6S ISO 4017 M6X20 A480	
120	315105-0153		6	WASHER BRB 6,4X12 RFR	
130	312105-0366		2	SCREW M6S ISO 4017 M6X12 A480	
TBA 1000B (See drawing on pages: 5-160, 5-164)					
010	2518130-0000		1	GUIDE	
020	1348150-0000		1	BAR	
030	1348139-0000		1	SLIDE	
040	1279409-0000		1	PLATE	
100	312105-0366		2	SCREW M6S ISO 4017 M6X12 A480	
110	312105-0370		2	SCREW M6S ISO 4017 M6X20 A480	
120	315105-0153		6	WASHER BRB 6,4X12 RFR	
TBA 1000SQ (See drawing on page: 5-160)					
010	2848490-0000		1	GUIDE	
020	1490036-0000		1	BAR	
030	1490034-0000		1	SLIDE	
040	1144621-0000		1	PLATE	
100	312105-0366		2	SCREW M6S ISO 4017 M6X12 A480	
110	312105-0370		2	SCREW M6S ISO 4017 M6X20 A480	
120	315105-0153		4	WASHER BRB 6,4X12 RFR	
TBA 1400B (See drawing on page: 5-160)					
010	2771442-0000		1	GUIDE	
020	2776825-0000		1	BAR	
030	2771443-0000		1	SLIDE	
040	2771439-0000		1	PLATE	
100	312105-0366		2	SCREW M6S ISO 4017 M6X12 A480	
110	312109-0374		2	SCREW M6S ISO 4017 M6X30 A480	
120	315105-0153		4	WASHER BRB 6,4X12 RFR	
TBA 1890S (See drawing on page: 5-160)					
010	2665203-0000		1	GUIDE	
020	1334271-0000		1	BAR	
030	2594906-0000		1	SLIDE	
040	1144621-0000		1	PLATE	
100	312105-0366		2	SCREW M6S ISO 4017 M6X12 A480	
110	312109-0374		3	SCREW M6S ISO 4017 M6X30 A480	
120	315105-0153		5	WASHER BRB 6,4X12 RFR	
TBA 2000S (See drawing on page: 5-160)					
010	2678621-0000		1	GUIDE	
020	1334271-0000		1	BAR	
030	2598488-0000		1	SLIDE	

Machine Type | Group Description | Used-In | Group Number | Page No

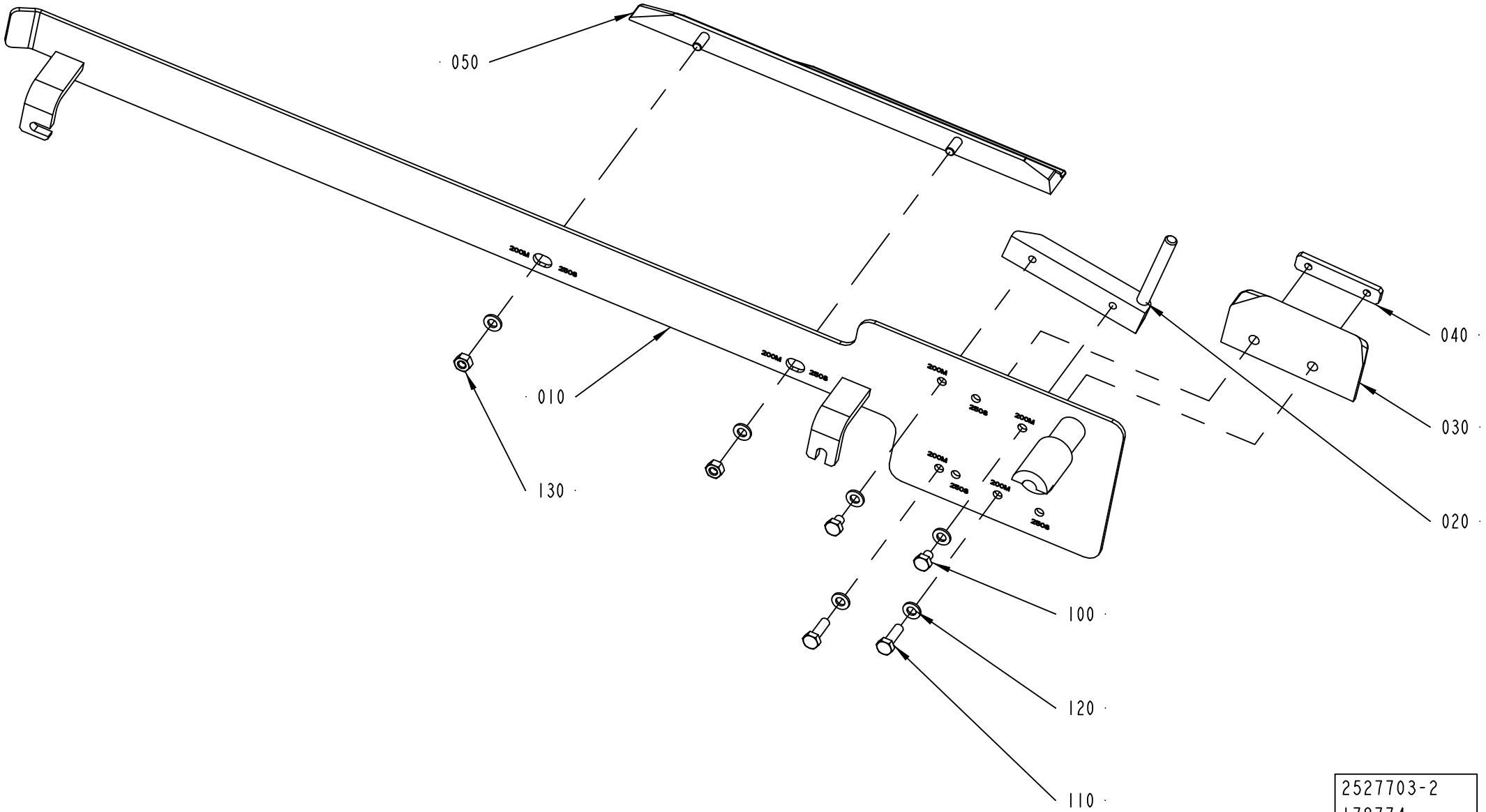
050
010
130
040
030
020
100
120
110
2527703-2
178774

Pos	Part No	UN	Qty	Description	Page No
TBA 2000S (Cont'd) (See drawing on page: 5-160)					
040	1144621-0000		1	PLATE	
100	312105-0366		2	SCREW M6S ISO 4017 M6X12 A480	
110	312109-0374		3	SCREW M6S ISO 4017 M6X30 A480	
120	315105-0153		5	WASHER BRB 6,4X12 RFR	
TPA 0200SQ (See drawing on page: 5-162)					
010	2674245-0000		1	GUIDE	
020	2674246-0000		1	BAR	
030	2674247-0000		1	SLIDE	
040	2674248-0000		1	PLATE	
050	1539895-0000		1	GUIDE	
100	312105-0366		2	SCREW M6S ISO 4017 M6X12 A480	
110	312105-0370		2	SCREW M6S ISO 4017 M6X20 A480	
120	315105-0153		6	WASHER BRB 6,4X12 RFR	
130	312105-0366		2	SCREW M6S ISO 4017 M6X12 A480	
TPA 0250SQ (See drawing on page: 5-162)					
010	2674244-0000		1	GUIDE	
020	1549855-0000		1	BAR	
030	1549853-0000		1	SLIDE	
040	1144621-0000		1	PLATE	
050	1539895-0000		1	GUIDE	
100	312105-0366		2	SCREW M6S ISO 4017 M6X12 A480	
110	312105-0370		2	SCREW M6S ISO 4017 M6X20 A480	
120	315105-0153		6	WASHER BRB 6,4X12 RFR	
130	312105-0366		2	SCREW M6S ISO 4017 M6X12 A480	
TPA 0750SQ (See drawing on page: 5-166)					
010	2647086-0000		1	GUIDE	
020	2647089-0000		1	BAR	
030	2647091-0000		1	SLIDE	
040	2647092-0000		1	ANGLE BLOCK	
050	2637666-0000		1	GUIDE	
100	312105-0364		2	SCREW M6S ISO 4017 M6X10 A480	
110	312105-0368		4	SCREW M6S ISO 4017 M6X16 A480	
120	315105-0153		6	WASHER BRB 6,4X12 RFR	
TPA 1000SQ (See drawing on page: 5-166)					
010	2647082-0000		1	GUIDE	
020	2647085-0000		1	BAR	
030	2675322-0000		1	SLIDE	
040	2543242-0000		1	ANGLE BLOCK	
050	2637666-0000		1	GUIDE	
100	312105-0364		2	SCREW M6S ISO 4017 M6X10 A480	
110	312105-0368		4	SCREW M6S ISO 4017 M6X16 A480	
120	315105-0153		6	WASHER BRB 6,4X12 RFR	
TBA 0200B (See drawing on page: 5-162)					
010	2526579-0000		1	GUIDE	
020	1348154-0000		1	BAR	
030	1348142-0000		1	SLIDE	
040	1348169-0000		1	PLATE	
050	2664201-0000		1	GUIDE	
100	312105-0366		2	SCREW M6S ISO 4017 M6X12 A480	
110	312105-0370		2	SCREW M6S ISO 4017 M6X20 A480	
120	315105-0153		6	WASHER BRB 6,4X12 RFR	
130	312605-0316		2	HEXAGON NUT, M6M M6 A280	
TBA 0200M (See drawing on page: 5-162)					
010	2657936-0000		1	GUIDE	
020	2657933-0000		1	BAR	
030	2657934-0000		1	SLIDE	
040	1348169-0000		1	PLATE	
050	1517527-0000		1	GUIDE	
100	312105-0366		2	SCREW M6S ISO 4017 M6X12 A480	
110	312105-0370		2	SCREW M6S ISO 4017 M6X20 A480	
120	315105-0153		6	WASHER BRB 6,4X12 RFR	
130	312605-0316		2	HEXAGON NUT, M6M M6 A280	
TBA 0200SQ (See drawing on page: 5-166)					
010	2752648-0000		1	GUIDE	
020	2668230-0000		1	BAR	
030	2668231-0000		1	SLIDE	
040	1348169-0000		1	PLATE	
050	2668229-0000		1	GUIDE	
100	312105-0366		2	SCREW M6S ISO 4017 M6X12 A480	
110	312105-0370		2	SCREW M6S ISO 4017 M6X20 A480	
120	315105-0153		6	WASHER BRB 6,4X12 RFR	
140	312105-0364		2	SCREW M6S ISO 4017 M6X10 A480	
TBA 0250B (See drawing on page: 5-162)					
010	2526579-0000		1	GUIDE	
020	1348153-0000		1	BAR	
030	1348141-0000		1	SLIDE	
040	1348169-0000		1	PLATE	
050	2664201-0000		1	GUIDE	
100	312105-0366		2	SCREW M6S ISO 4017 M6X12 A480	
110	312105-0370		2	SCREW M6S ISO 4017 M6X20 A480	
120	315105-0153		6	WASHER BRB 6,4X12 RFR	
130	312605-0316		2	HEXAGON NUT, M6M M6 A280	

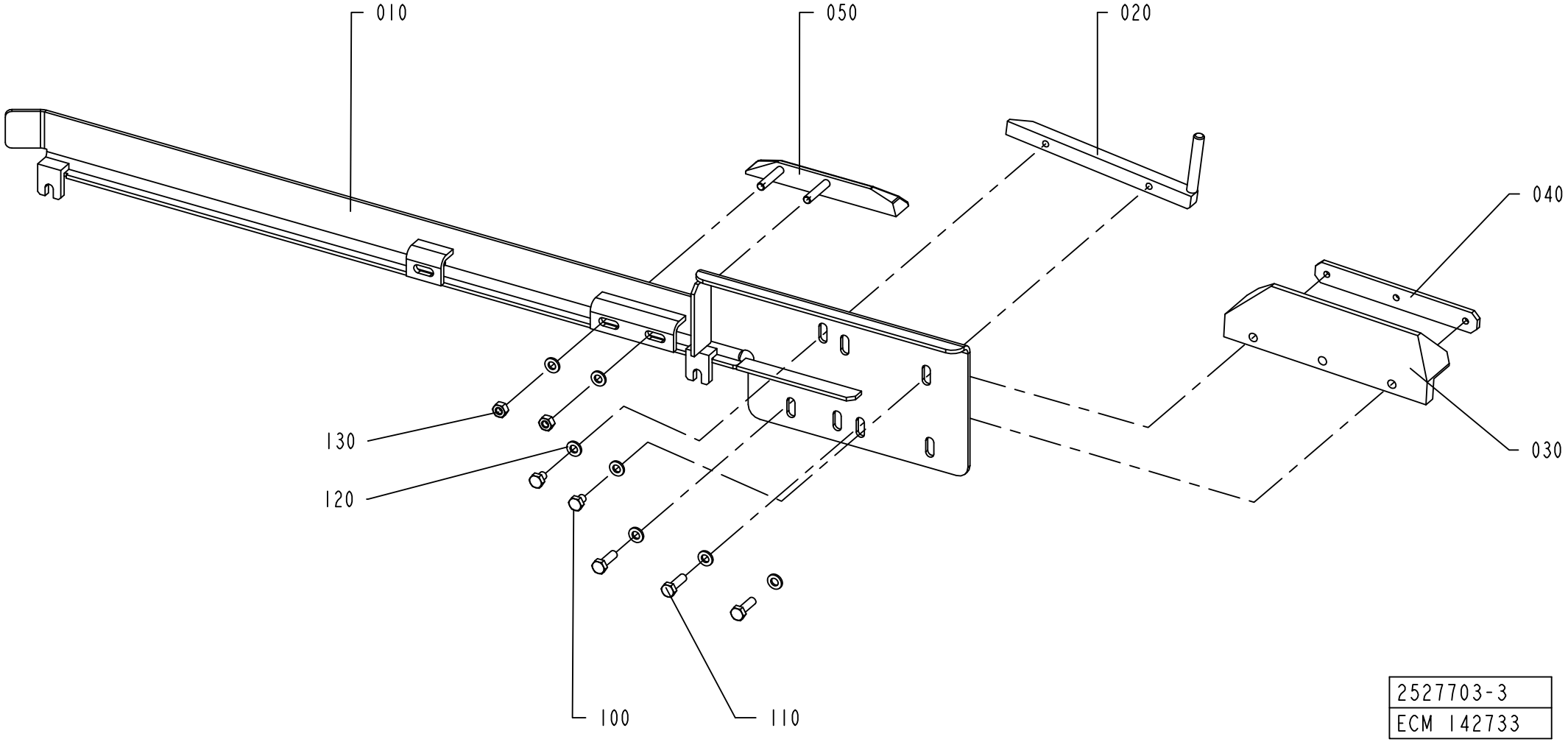

2527703-3
ECM 142733

Pos	Part No	UN	Qty	Description	Page No
SEE PREVIOUS LISTS PAGES: 5-161, 5-163.					

Pos	Part No	UN	Qty	Description	Page No

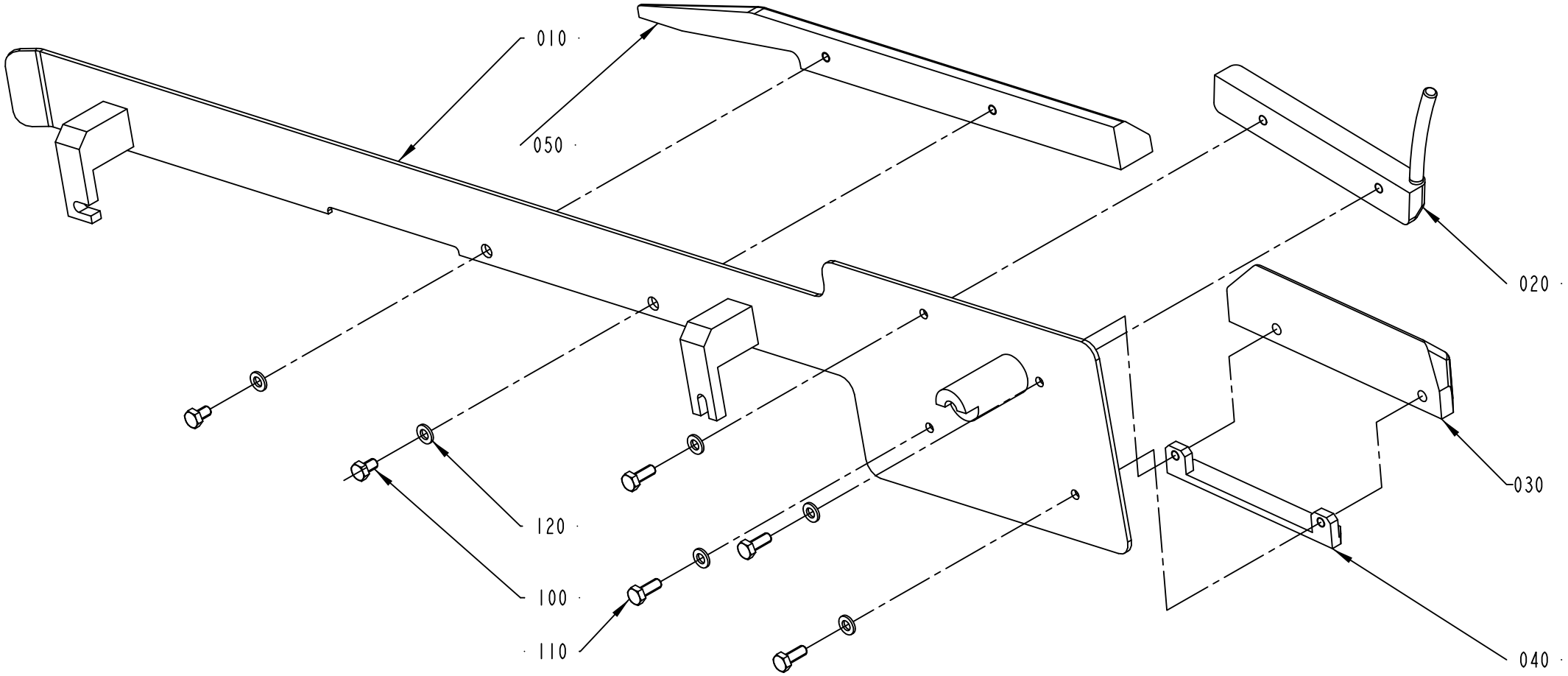

2527703-4
200877

Pos	Part No	UN	Qty	Description	Page No

SEE PREVIOUS LISTS PAGES: 5-161, 5-163.

Pos	Part No	UN	Qty	Description	Page No

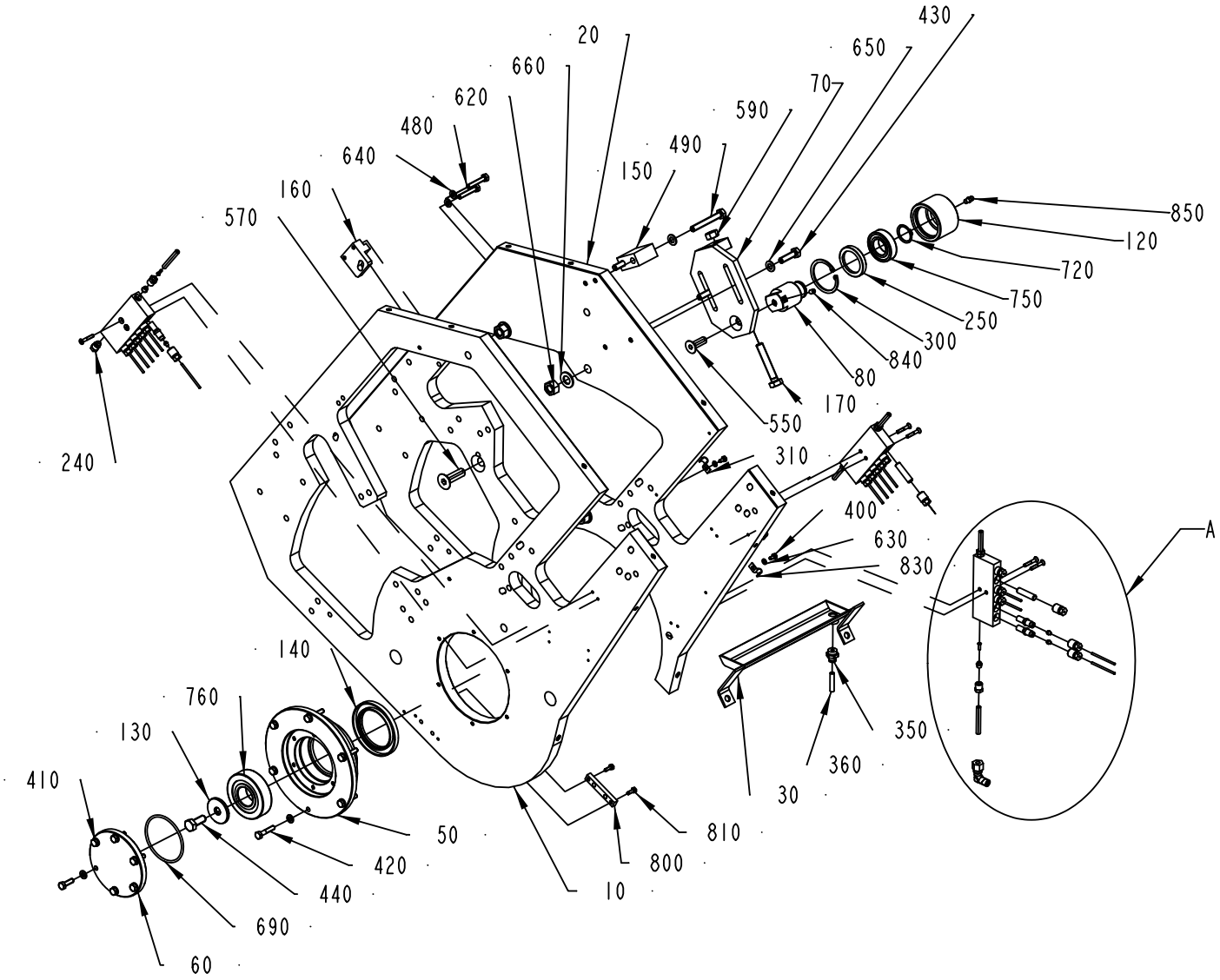
20
660
620
480
640
160
570
240
150
490
590
70
650
430
850
120
720
750
250
300
840
80
170
550
310
400
630
830
A
350
360
30
810
800
10
140
760
130
410
50
420
440
690
60

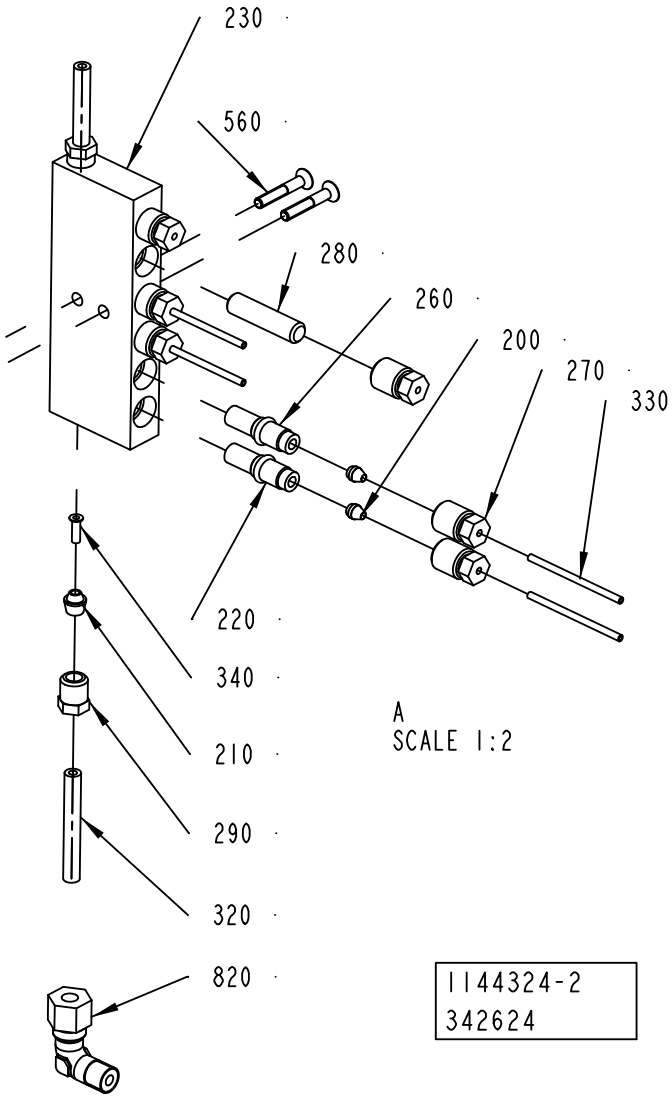
230
560
280
260
200
270
330
220
340
210
290
320
820
A
SCALE 1:2
1144324-2
342624

ECM: 342624 - 20080702
Group number: 1144324-0300
Assembly Drawing: 1144324-2_1_AF

This list covers pages from 5-168 to 5-171

Pos	Part No	UN	Qty	Description	Page No
A3/FLEX TBA 1890S QC, A3/FLEX TBA 2000S QC, A3/FLEX TBA 1400B (See drawing on pages: 5-168, 5-170)					
160	1282844-0000		1	SUPPORT	
260	90092-0052		13	METERING VALVE 10 MM3	
270	90134-0039		18	BUSHING VALVE CONNECTION 2,5 MM	
280	90134-0052		4	PLUG DOSING BLOCK	
A3/FLEX TBA 1000B, A3/FLEX TBA 1000S, A3/FLEX TBA 0200S, A3/FLEX TBA 1500S, A3/FLEX TBA 0250B QC, A3/FLEX TBA 0200B QC, A3/FLEX TBA 0330S QC, A3/FLEX TBA 0200M QC, A3/FLEX TBA 0250S QC (See drawing on pages: 5-168, 5-170)					
160	1144900-0000		1	SUPPORT	
260	90092-0052		14	METERING VALVE 10 MM3	
270	90134-0039		18	BUSHING VALVE CONNECTION 2,5 MM	
280	90134-0052		4	PLUG DOSING BLOCK	
A3/FLEX TBA 1000SQ, A3/FLEX TPA 0330SQ, A3/FLEX TPA 0500SQ, A3/FLEX TPA 1000SQ QC, A3/FLEX TPA 0750SQ QC, A3/FLEX TPA 0200SQ QC, A3/FLEX TPA 0250SQ QC, A3/FLEX TPA 1000SQ NOQC, A3/FLEX TBA 0250SQ QC, A3/FLEX TBA 0200SQ QC, A3/FLEX TBA 0500SQ QC (See drawing on pages: 5-168, 5-170)					
160	1282844-0000		1	SUPPORT	
260	90092-0052		16	METERING VALVE 10 MM3	
270	90134-0040		2	BUSHING VALVE CONNECTION 4 MM	
270	90134-0039		16	BUSHING VALVE CONNECTION 2,5 MM	
280	90134-0052		2	PLUG DOSING BLOCK	
A3/FLEX TBA 0500B QC, A3/FLEX TBA 1000B QC, A3/FLEX TBA 0500S (See drawing on pages: 5-168, 5-170)					
160	1282844-0000		1	SUPPORT	
260	90092-0052		14	METERING VALVE 10 MM3	
270	90134-0039		18	BUSHING VALVE CONNECTION 2,5 MM	
280	90134-0052		4	PLUG DOSING BLOCK	
Common Parts					
010	1347109-0000		1	PLATE	
020	1347108-0000		1	PLATE	
050	598101-0000		1	BEARING HOUSING	
060	1144618-0000		1	FLANGE	
070	1144797-0000		1	SUPPORT	
080	2963361-0000		1	SHAFT	
120	2963360-0000		1	ROLLER	
130	1144620-0000		1	WASHER	
140	1144665-0000		1	SEAL RING	
150	1144839-0000		1	BLOCK	
170	1260931-0000		1	SCREW	
180	2727659-0000		1	PROTECTION PLATE	
190	2767105-0000		1	PROTECTION PLATE	
200	90028-0020		14	CONE TUBE 2,5MM	
210	90028-0025		5	CONE TUBE 6 MM	
220	90092-0054		1	METERING VALVE 50 MM3	
230	90032-0040		3	BLOCK 6 WAYS	
240	90087-0019		1	PLUG M10X1 STAINLESS	
250	90091-0297		1	RADIAL SEAL 35X47X7 MM DUST LIP	
290	90134-0055		5	BUSHING/NUT INLET/OUTLET 6 MM	
300	90141-0019		1	RETAINING RING FOR BORE DIN 472 50 A2	
310	316810-0106		3	PIPE CLIP FOR TUBE D=8 MM	
320	90166-0108	M	4	TUBE 6 MM PA TRANSP.	
330	90166-0143	M	9	TUBE 2,5 MM PA TRANSP.	
340	90134-0030		6	SLEEVE FOR PLASTIC TUBE	
400	312105-0287		5	SCREW M6S ISO 4017 M4X8 A470	
410	312105-0370		6	SCREW M6S ISO 4017 M6X20 A480	
420	312105-0374		6	SCREW M6S ISO 4014 M6X30 A480	
430	312105-0455		2	SCREW M6S ISO 4017 M8X30 A480	
440	312105-0493		1	SCREW M6S ISO 4017 M10X25 A480	
480	312109-0376		2	SCREW M6S ISO 4017 M6X35 A480	
490	312109-0463		2	SCREW M6S ISO 4017 M8X60 A480	
550	312155-0495		1	SCREW DIN 7991 MF6S M10X30 A4 70	
560	312155-0297		6	SCREW DIN 7991 MF6S M4X25 A4 70	
570	312155-0540		1	SCREW DIN 7991 MF6S M12X40 A4 70	
590	312605-0320		1	HEXAGON NUT, M6M M10 A280	
620	312605-0322		3	HEXAGON NUT, M6M M12 A280	
630	315105-0136		5	WASHER BRB 4,3X8 RFR	
640	315105-0153		14	WASHER BRB 6,4X12 RFR	
650	315105-0165		4	WASHER BRB 8,4X16 RFR	
660	315105-0178		3	WASHER BRB 13X24 RFR	
690	315202-0305		1	O-RING 69,5X3 MM	
720	315751-0119		1	RETAINING RING FOR SHAFT DIN 471 25 SS	
750	321306-0105		1	BALL BEARING, 25X47X12 MM	
760	321316-0206		1	BALL BEARING, 30X72X19 MM	
780	352113-0102		3	CABLE TIE, BLACK 188X4,8 MM	
790	352113-0101		7	CABLE TIE, BLACK 92X2,5 MM	
800	1487821-0000		1	SPACER	
810	312105-0291		2	SCREW M6S ISO 4017 M4X12 A470	
820	90030-0200		1	CONN. ELBOW, 6-M10X1, EXT.THREAD	
830	90165-0057		2	PIPE CLIP FOR TUBE D=6 MM	
840	312318-0362		1	SCREW ISO4029 M6X8 A4	
850	344502-0021		1	GREASE NIPPLE STRAIGHT M6	
860	90296-0068		1	SHELL ALVANIA GREASE EP 2	

Machine Type | Group Description | Used-In | Group Number | Page No

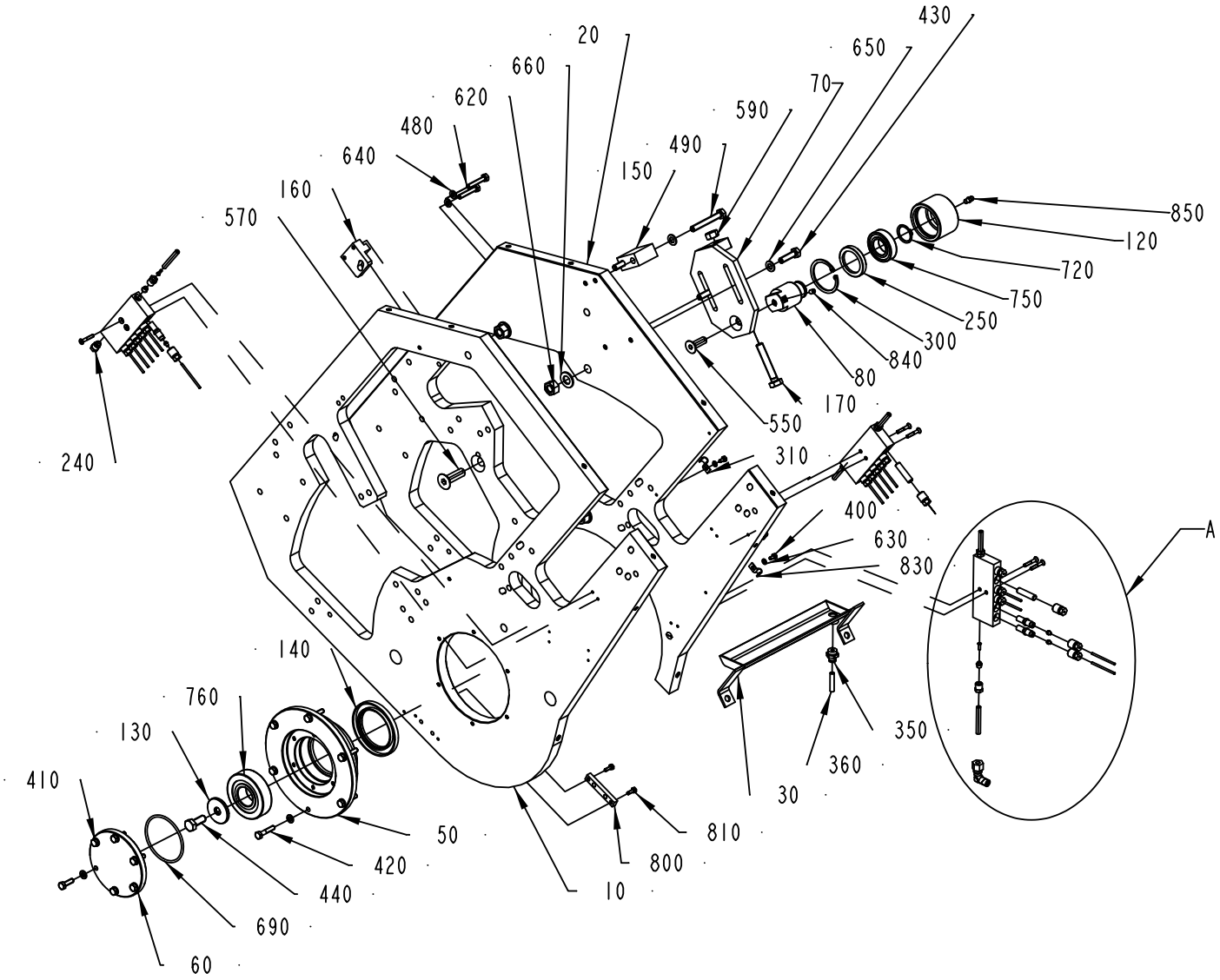
20
660
620
480
640
160
570
240
150
490
590
70
650
430
850
120
720
750
250
300
840
80
170
550
310
400
630
830
A
350
360
30
810
800
10
140
760
130
410
50
420
440
690
60

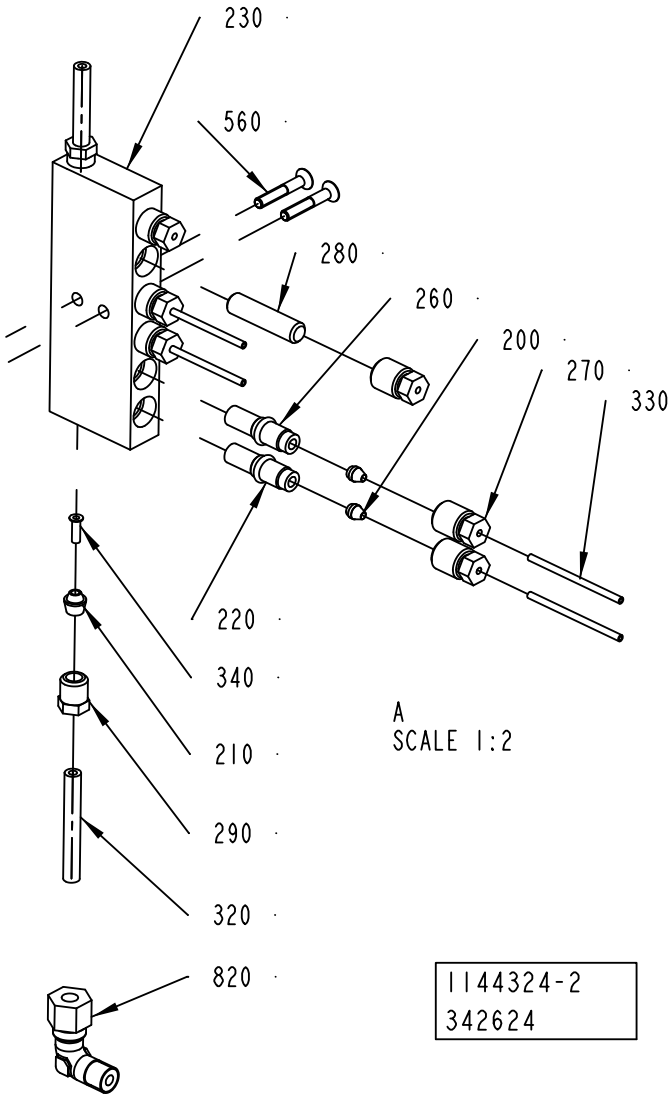
230
560
280
260
200
270
330
220
340
210
290
320
820
A
SCALE 1:2
1144324-2
342624

ECM: 342624 - 20080702
Group number: 1144324-0300
Assembly Drawing: 1144324-2_1_AF

This list covers pages from 5-168 to 5-171

Pos	Part No	UN	Qty	Description	Page No
Common Parts (Cont'd)					
850	344502-0021		1	GREASE NIPPLE STRAIGHT M6	
860	90296-0068		1	SHELL ALVANIA GREASE EP 2	

Pos	Part No	UN	Qty	Description	Page No

FLAP HEATER BODY

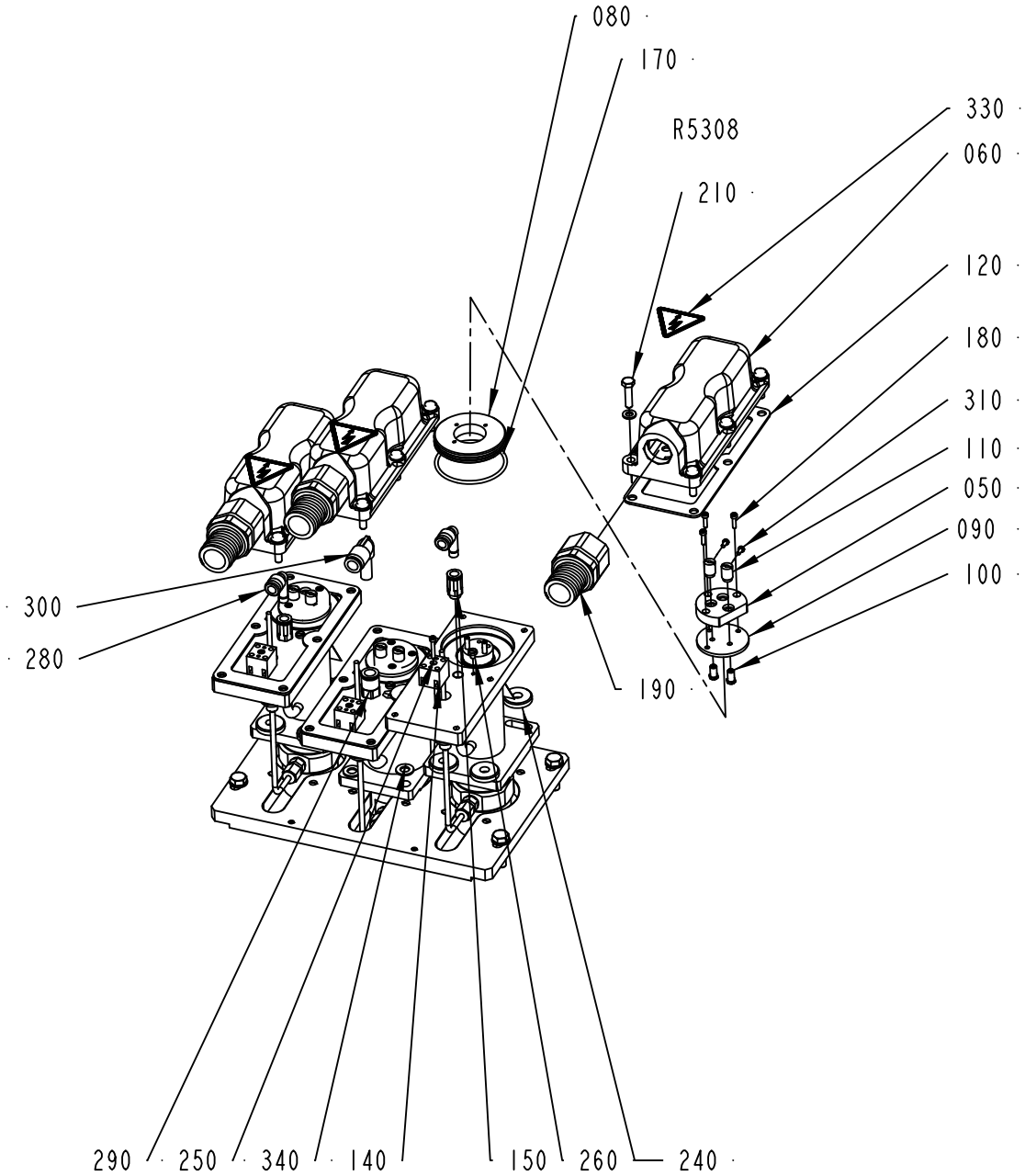

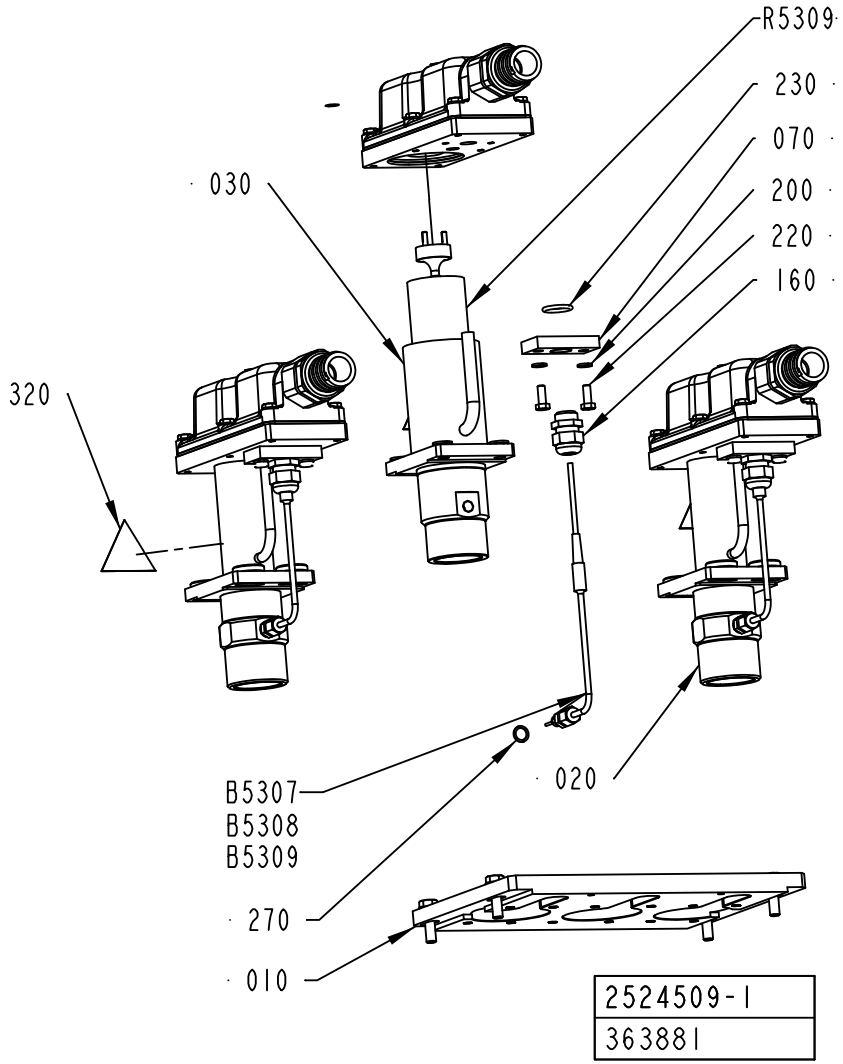

ECM: 369007 - 20090101
Group number: 2524509-0100
Assembly Drawing: 2524509-1_1_AD

This list covers pages from 5-172 to 5-177

Pos	Part No	UN	Qty	Description	Page No
A3/FLEX NOQC (See drawing on page: 5-172)					
010	2544339-0100		1	FRAME	**5-179**
020	1296070-0000		2	HEATING PIPE	
A3/FLEX TBA 0500B QC, A3/FLEX TBA 1000B QC, A3/FLEX TBA 0250B QC, A3/FLEX TBA 0200B QC, A3/FLEX TBA 0330S QC, A3/FLEX TBA 0200M QC, A3/FLEX TBA 0250S QC, A3/FLEX TPA 0200SQ QC, A3/FLEX TPA 0250SQ QC, A3/FLEX TBA 0250SQ QC, A3/FLEX TBA 0200SQ QC (See drawing on pages: 5-174, 5-176)					
010	2535538-0200		1	FRAME	**5-181, 5-183, 5-185, 5-187, 5-189, 5-191, 5-193, 5-195, 5-197**
020	1296070-0000		2	HEATING PIPE	
A3/FLEX TBA 1000SQ, A3/FLEX TBA 0500SQ (See drawing on pages: 5-174, 5-176)					
010	2535538-0200		1	FRAME	**5-181, 5-183, 5-185, 5-187, 5-189, 5-191, 5-193, 5-195, 5-197**
020	1296070-0000		2	HEATING PIPE	
A3/FLEX TBA 1890S QC, A3/FLEX TBA 2000S QC, A3/FLEX TBA 1400B (See drawing on pages: 5-174, 5-176)					
010	2535538-0200		1	FRAME	**5-181, 5-183, 5-185, 5-187, 5-189, 5-191, 5-193, 5-195, 5-197**
020	1296070-0000		2	HEATING PIPE	
A3/FLEX TPA 1000SQ QC, A3/FLEX TPA 0750SQ QC (See drawing on pages: 5-174, 5-176)					
010	2535538-0200		1	FRAME	**5-181, 5-183, 5-185, 5-187, 5-189, 5-191, 5-193, 5-195, 5-197**
020	1296070-0000		2	HEATING PIPE	
Common Parts					
030	1285293-0000		1	HEATING PIPE	
050	294464-0000		3	BASE PLATE	
060	1484096-0000		3	COVER	
070	1285311-0000		3	PLATE	
080	1285307-0000		3	SPACER	
090	1285308-0000		3	GASKET	
100	270927-0000		6	SCREW	
110	266739-0000		6	CABLE GLAND	
120	1285312-0000		3	GASKET	
140	90195-0020		3	TERMINAL BLOCK, BK 2CRN; 0624720000	
150	342722-0204		2	PIPE COUPLING	
160	352103-0106		3	CABLE GLAND, ST 11, PR18,6/PG11	
170	315204-0303		3	O-RING 59,5X3 MM	
180	312115-0226		9	SCREW ISO4762 M3X12 A4 80	
190	353247-0005		3	HOSE GLAND EMC PG21 EXTENDED	
200	315105-0153		24	WASHER BRB 6,4X12 RFR	
210	312105-0372		18	SCREW M6S ISO 4017 M6X25 A480	
220	312105-0368		6	SCREW M6S ISO 4017 M6X16 A480	
230	315204-0215		3	O-RING 19,2X3 MM	
240	315125-0165		8	WASHER TBRSB 8,4X26X5 A4	
250	312115-0230		3	SCREW ISO4762 M3X20 A4 80	
260	312132-0284		3	SLOTTED HEAD, PAN SCREW, MSCS M4X5	
270	315234-0109		3	WASHER,PL.RND.CU.10,3/13,5 H=1,0	
280	90055-0204		2	ELBOW WITH TAILPIECE 8/8 MM LONG	
290	342722-0211		1	STRAIGHT COUPLING D=10-G1/4"	
300	90459-1506		1	ELBOW WITH TAILPIECE 10/10 MM	
310	312125-0220		6	SCREW ISO 1207 M3X6 A4	
320	359710-0001		3	WARNING SIGN ISO, HOT SURFACE	
330	359705-0015		3	WARNING SIGN ISO, RISK OF ELECTRIC SHOCK	
340	315105-0165		4	WASHER BRB 8,4X16 RFR	
B5307	90459-4053		1	THERMOCOUPLE, 5110082-001	
B5308	90459-4053		1	THERMOCOUPLE, 5110082-001	
B5309	90459-4053		1	THERMOCOUPLE, 5110082-001	
R5307	90459-0707		1	HEATING ELEMENT 1500W/220V	
R5308	90459-0707		1	HEATING ELEMENT 1500W/220V	
R5309	90206-0030		1	HEATING ELEMENT 3000W, 220V	

Machine Type	Group Description	Used-In	Group Number	Page No

FLAP HEATER BODY

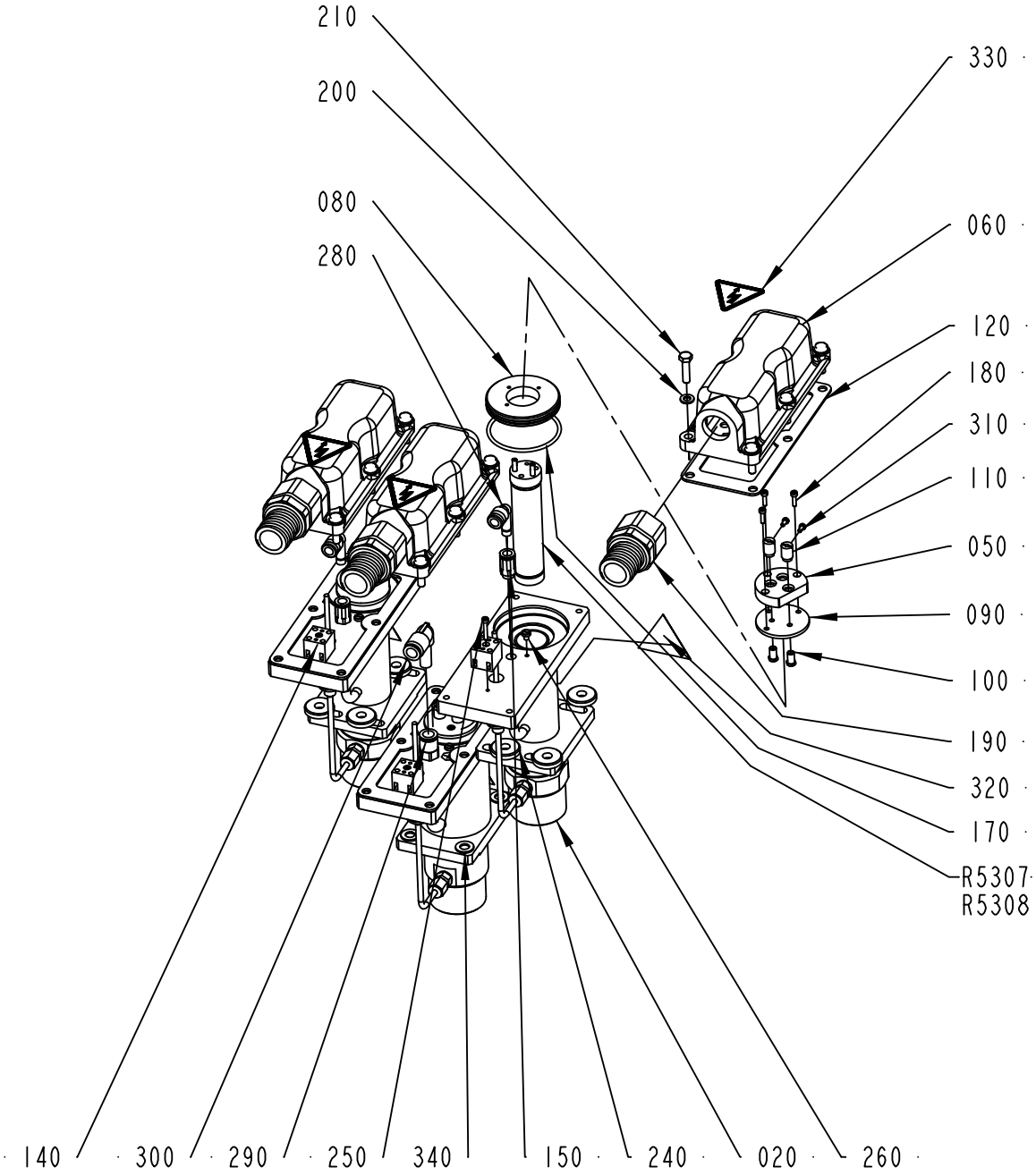

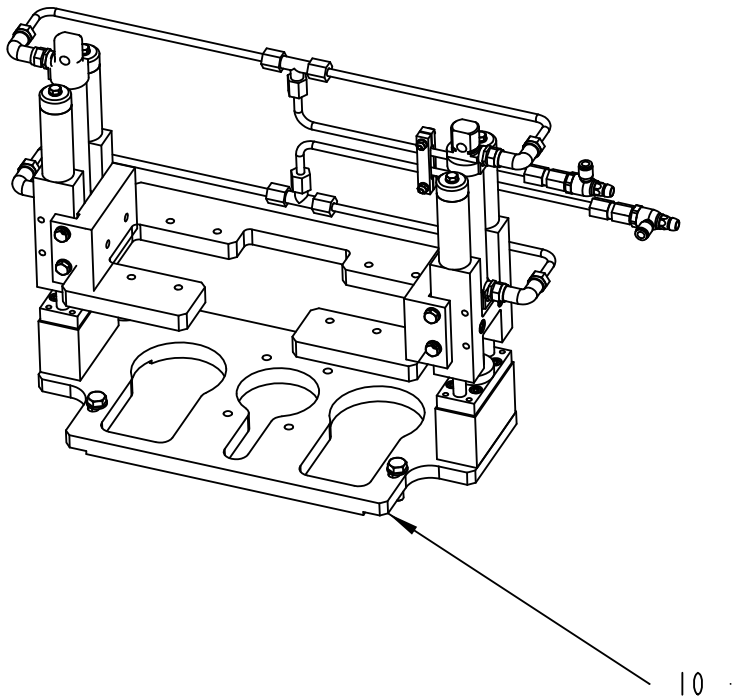

2524509-2
363881

ECM: 369007 - 20090101
Group number: 2524509-0100
Assembly Drawing: 2524509-2_1_AE

This list covers pages from 5-172 to 5-177

Pos	Part No	UN	Qty	Description	Page No
A3/FLEX NOQC (See drawing on page: 5-172)					
010	2544339-0100		1	FRAME	**5-179**
020	1296070-0000		2	HEATING PIPE	
A3/FLEX TBA 0500B QC, A3/FLEX TBA 1000B QC, A3/FLEX TBA 0250B QC, A3/FLEX TBA 0200B QC, A3/FLEX TBA 0330S QC, A3/FLEX TBA 0200M QC, A3/FLEX TBA 0250S QC, A3/FLEX TPA 0200SQ QC, A3/FLEX TPA 0250SQ QC, A3/FLEX TBA 0250SQ QC, A3/FLEX TBA 0200SQ QC (See drawing on pages: 5-174, 5-176)					
010	2535538-0200		1	FRAME	**5-181, 5-183, 5-185, 5-187, 5-189, 5-191, 5-193, 5-195, 5-197**
020	1296070-0000		2	HEATING PIPE	
A3/FLEX TBA 1000SQ, A3/FLEX TBA 0500SQ (See drawing on pages: 5-174, 5-176)					
010	2535538-0200		1	FRAME	**5-181, 5-183, 5-185, 5-187, 5-189, 5-191, 5-193, 5-195, 5-197**
020	1296070-0000		2	HEATING PIPE	
A3/FLEX TBA 1890S QC, A3/FLEX TBA 2000S QC, A3/FLEX TBA 1400B (See drawing on pages: 5-174, 5-176)					
010	2535538-0200		1	FRAME	**5-181, 5-183, 5-185, 5-187, 5-189, 5-191, 5-193, 5-195, 5-197**
020	1296070-0000		2	HEATING PIPE	
A3/FLEX TPA 1000SQ QC, A3/FLEX TPA 0750SQ QC (See drawing on pages: 5-174, 5-176)					
010	2535538-0200		1	FRAME	**5-181, 5-183, 5-185, 5-187, 5-189, 5-191, 5-193, 5-195, 5-197**
020	1296070-0000		2	HEATING PIPE	
Common Parts					
030	1285293-0000		1	HEATING PIPE	
050	294464-0000		3	BASE PLATE	
060	1484096-0000		3	COVER	
070	1285311-0000		3	PLATE	
080	1285307-0000		3	SPACER	
090	1285308-0000		3	GASKET	
100	270927-0000		6	SCREW	
110	266739-0000		6	CABLE GLAND	
120	1285312-0000		3	GASKET	
140	90195-0020		3	TERMINAL BLOCK, BK 2CRN; 0624720000	
150	342722-0204		2	PIPE COUPLING	
160	352103-0106		3	CABLE GLAND, ST 11, PR18,6/PG11	
170	315204-0303		3	O-RING 59,5X3 MM	
180	312115-0226		9	SCREW ISO4762 M3X12 A4 80	
190	353247-0005		3	HOSE GLAND EMC PG21 EXTENDED	
200	315105-0153		24	WASHER BRB 6,4X12 RFR	
210	312105-0372		18	SCREW M6S ISO 4017 M6X25 A480	
220	312105-0368		6	SCREW M6S ISO 4017 M6X16 A480	
230	315204-0215		3	O-RING 19,2X3 MM	
240	315125-0165		8	WASHER TBRSB 8,4X26X5 A4	
250	312115-0230		3	SCREW ISO4762 M3X20 A4 80	
260	312132-0284		3	SLOTTED HEAD, PAN SCREW, MSCS M4X5	
270	315234-0109		3	WASHER,PL.RND.CU.10,3/13,5 H=1,0	
280	90055-0204		2	ELBOW WITH TAILPIECE 8/8 MM LONG	
290	342722-0211		1	STRAIGHT COUPLING D=10-G1/4"	
300	90459-1506		1	ELBOW WITH TAILPIECE 10/10 MM	
310	312125-0220		6	SCREW ISO 1207 M3X6 A4	
320	359710-0001		3	WARNING SIGN ISO, HOT SURFACE	
330	359705-0015		3	WARNING SIGN ISO, RISK OF ELECTRIC SHOCK	
340	315105-0165		4	WASHER BRB 8,4X16 RFR	
B5307	90459-4053		1	THERMOCOUPLE, 5110082-001	
B5308	90459-4053		1	THERMOCOUPLE, 5110082-001	
B5309	90459-4053		1	THERMOCOUPLE, 5110082-001	
R5307	90459-0707		1	HEATING ELEMENT 1500W/220V	
R5308	90459-0707		1	HEATING ELEMENT 1500W/220V	
R5309	90206-0030		1	HEATING ELEMENT 3000W, 220V	

Machine Type	Group Description	Used-In	Group Number	Page No

FLAP HEATER BODY

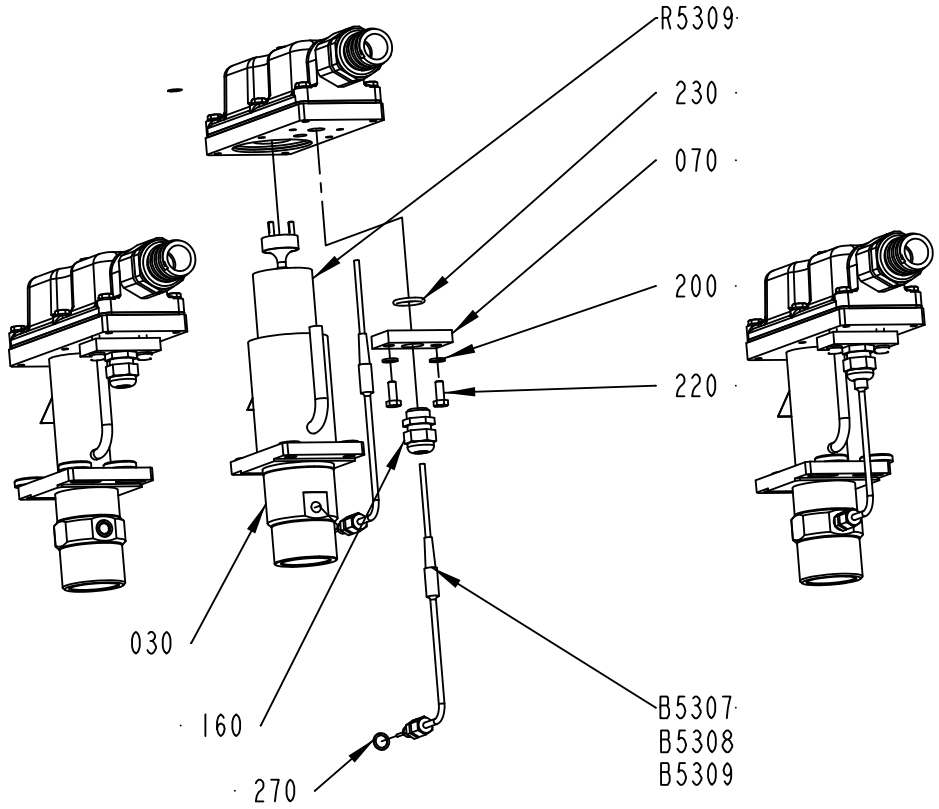

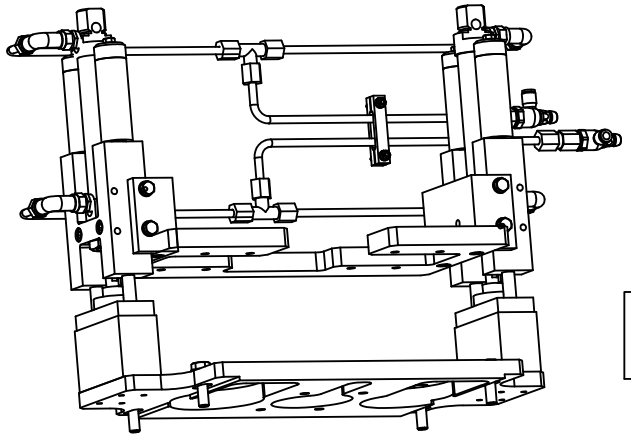

2524509-2
363881

ECM: 369007 - 20090101
Group number: 2524509-0100
Assembly Drawing: 2524509-2_2_AE

This list covers pages from 5-172 to 5-177

Pos	Part No	UN	Qty	Description	Page No
A3/FLEX NOQC (See drawing on page: 5-172)					
010	2544339-0100		1	FRAME	**5-179**
020	1296070-0000		2	HEATING PIPE	
A3/FLEX TBA 0500B QC, A3/FLEX TBA 1000B QC, A3/FLEX TBA 0250B QC, A3/FLEX TBA 0200B QC, A3/FLEX TBA 0330S QC, A3/FLEX TBA 0200M QC, A3/FLEX TBA 0250S QC, A3/FLEX TPA 0200SQ QC, A3/FLEX TPA 0250SQ QC, A3/FLEX TBA 0250SQ QC, A3/FLEX TBA 0200SQ QC (See drawing on pages: 5-174, 5-176)					
010	2535538-0200		1	FRAME	**5-181, 5-183, 5-185, 5-187, 5-189, 5-191, 5-193, 5-195, 5-197**
020	1296070-0000		2	HEATING PIPE	
A3/FLEX TBA 1000SQ, A3/FLEX TBA 0500SQ (See drawing on pages: 5-174, 5-176)					
010	2535538-0200		1	FRAME	**5-181, 5-183, 5-185, 5-187, 5-189, 5-191, 5-193, 5-195, 5-197**
020	1296070-0000		2	HEATING PIPE	
A3/FLEX TBA 1890S QC, A3/FLEX TBA 2000S QC, A3/FLEX TBA 1400B (See drawing on pages: 5-174, 5-176)					
010	2535538-0200		1	FRAME	**5-181, 5-183, 5-185, 5-187, 5-189, 5-191, 5-193, 5-195, 5-197**
020	1296070-0000		2	HEATING PIPE	
A3/FLEX TPA 1000SQ QC, A3/FLEX TPA 0750SQ QC (See drawing on pages: 5-174, 5-176)					
010	2535538-0200		1	FRAME	**5-181, 5-183, 5-185, 5-187, 5-189, 5-191, 5-193, 5-195, 5-197**
020	1296070-0000		2	HEATING PIPE	
Common Parts					
030	1285293-0000		1	HEATING PIPE	
050	294464-0000		3	BASE PLATE	
060	1484096-0000		3	COVER	
070	1285311-0000		3	PLATE	
080	1285307-0000		3	SPACER	
090	1285308-0000		3	GASKET	
100	270927-0000		6	SCREW	
110	266739-0000		6	CABLE GLAND	
120	1285312-0000		3	GASKET	
140	90195-0020		3	TERMINAL BLOCK, BK 2CRN; 0624720000	
150	342722-0204		2	PIPE COUPLING	
160	352103-0106		3	CABLE GLAND, ST 11, PR18,6/PG11	
170	315204-0303		3	O-RING 59,5X3 MM	
180	312115-0226		9	SCREW ISO4762 M3X12 A4 80	
190	353247-0005		3	HOSE GLAND EMC PG21 EXTENDED	
200	315105-0153		24	WASHER BRB 6,4X12 RFR	
210	312105-0372		18	SCREW M6S ISO 4017 M6X25 A480	
220	312105-0368		6	SCREW M6S ISO 4017 M6X16 A480	
230	315204-0215		3	O-RING 19,2X3 MM	
240	315125-0165		8	WASHER TBRSB 8,4X26X5 A4	
250	312115-0230		3	SCREW ISO4762 M3X20 A4 80	
260	312132-0284		3	SLOTTED HEAD, PAN SCREW, MSCS M4X5	
270	315234-0109		3	WASHER,PL.RND.CU.10,3/13,5 H=1,0	
280	90055-0204		2	ELBOW WITH TAILPIECE 8/8 MM LONG	
290	342722-0211		1	STRAIGHT COUPLING D=10-G1/4"	
300	90459-1506		1	ELBOW WITH TAILPIECE 10/10 MM	
310	312125-0220		6	SCREW ISO 1207 M3X6 A4	
320	359710-0001		3	WARNING SIGN ISO, HOT SURFACE	
330	359705-0015		3	WARNING SIGN ISO, RISK OF ELECTRIC SHOCK	
340	315105-0165		4	WASHER BRB 8,4X16 RFR	
B5307	90459-4053		1	THERMOCOUPLE, 5110082-001	
B5308	90459-4053		1	THERMOCOUPLE, 5110082-001	
B5309	90459-4053		1	THERMOCOUPLE, 5110082-001	
R5307	90459-0707		1	HEATING ELEMENT 1500W/220V	
R5308	90459-0707		1	HEATING ELEMENT 1500W/220V	
R5309	90206-0030		1	HEATING ELEMENT 3000W, 220V	

Machine Type	Group Description	Used-In	Group Number	Page No

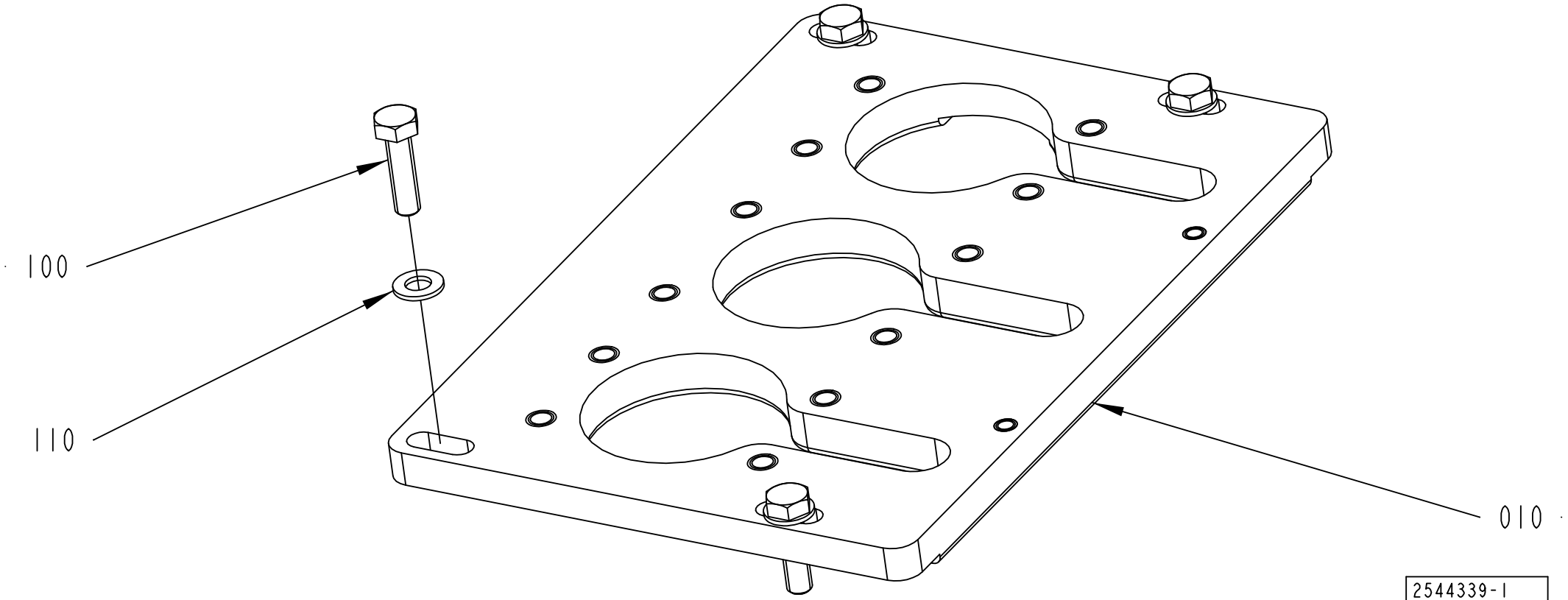
100
110
010
2544339-1
ECM 116811

ECM: 189491 - 20041104
Group number: 2544339-0100
Assembly Drawing: 2544339-1_1_AA

Pos	Part No	UN	Qty	Description	Page No
-					
010	1285291-0000		1	PLATE	
100	315105-0165		4	WASHER BRB 8,4X16 RFR	
110	312105-0453		4	SCREW M6S ISO 4017 M8X25 A480	

Pos	Part No	UN	Qty	Description	Page No

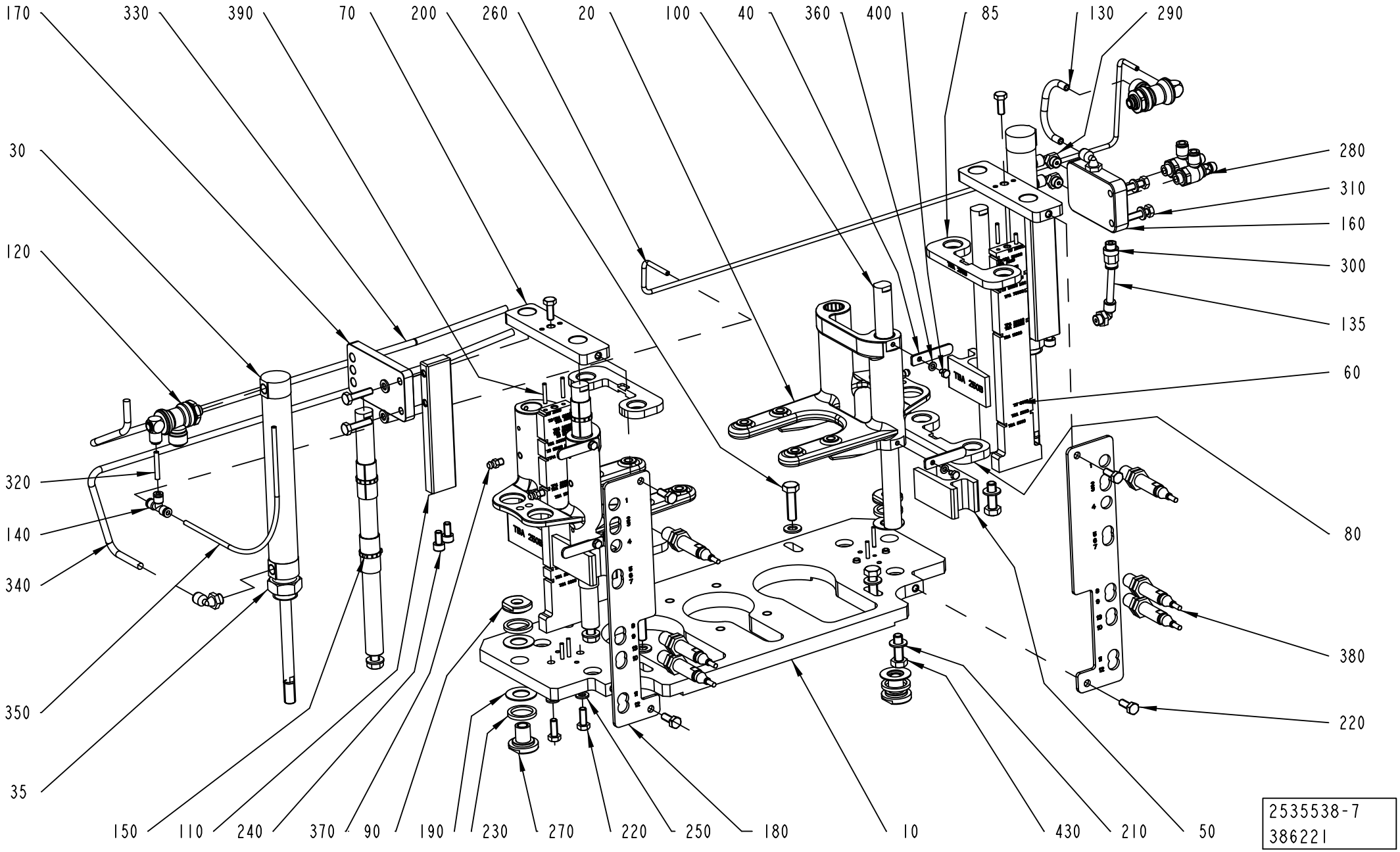
170
330
390
70
200
260
20
100
40
360
400
85
130
290
30
120
320
140
340
350
35
280
310
160
300
135
60
80
380
220
150
110
240
370
90
190
230
270
220
250
180
10
430
210
50
2535538-7
386221

ECM: 389643 - 20090701
Group number: 2535538-0200
Assembly Drawing: 2535538-7_1_AD

This list covers pages from 5-180 to 5-197

Pos	Part No	UN	Qty	Description	Page No
TBA 0200B, TBA 0250B, TBA 0330S (See drawing on page: 5-180)					
050	2756349-0000		4	SPACER	
080	2760089-0000		2	STOP	
085	2908914-0000		2	SPACER	
180	2940467-0000		2	BRACKET	
360	315105-0136		4	WASHER BRB 4,3X8 RFR	
380	90600-0464		6	INDUCTIVE SWITCH,E2A-M12LS02-WP-B1-TP 5M	
TBA 0200M, TBA 0250S (See drawing on page: 5-188)					
080	2760089-0000		4	STOP	
180	2940467-0000		2	BRACKET	
360	315105-0136		4	WASHER BRB 4,3X8 RFR	
380	90600-0464		4	INDUCTIVE SWITCH,E2A-M12LS02-WP-B1-TP 5M	
TBA 0200SQ, TBA 0250SQ (See drawing on page: 5-194)					
085	2940466-0000		2	SPACER	
180	2940467-0000		2	BRACKET	
360	315105-0136		8	WASHER BRB 4,3X8 RFR	
380	90600-0464		4	INDUCTIVE SWITCH,E2A-M12LS02-WP-B1-TP 5M	
410	2830359-0000		4	STOP	
420	312105-0289		4	SCREW M6S H4X10 A4 70 ISO4017/DIN933	
TBA 0500B, TBA 1000B (See drawing on page: 5-186)					
080	2760089-0000		2	STOP	
180	2940467-0000		2	BRACKET	
360	315105-0136		8	WASHER BRB 4,3X8 RFR	
380	90600-0464		4	INDUCTIVE SWITCH,E2A-M12LS02-WP-B1-TP 5M	
410	2830359-0000		4	STOP	
420	312105-0289		4	SCREW M6S H4X10 A4 70 ISO4017/DIN933	
TBA 0500SQ, TBA 1000SQ (See drawing on page: 5-184)					
080	2760089-0000		2	STOP	
180	2940468-0000		2	BRACKET	
360	315105-0136		8	WASHER BRB 4,3X8 RFR	
380	90600-0464		4	INDUCTIVE SWITCH,E2A-M12LS02-WP-B1-TP 5M	
410	2830210-0000		4	STOP	
420	312105-0289		4	SCREW M6S H4X10 A4 70 ISO4017/DIN933	
TBA 1400B (See drawing on page: 5-196)					
080	2760089-0000		2	STOP	
180	2940467-0000		2	BRACKET	
360	315105-0136		8	WASHER BRB 4,3X8 RFR	
380	90600-0464		4	INDUCTIVE SWITCH,E2A-M12LS02-WP-B1-TP 5M	
420	312105-0293		4	SCREW M6S ISO 4017 M4X16 A470	
TBA 1890S, TBA 2000S (See drawing on page: 5-190)					
080	2760089-0000		2	STOP	
180	2940467-0000		2	BRACKET	
360	315105-0136		8	WASHER BRB 4,3X8 RFR	
380	90600-0464		4	INDUCTIVE SWITCH,E2A-M12LS02-WP-B1-TP 5M	
410	2940465-0000		4	SPACER	
420	312105-0293		4	SCREW M6S ISO 4017 M4X16 A470	
TPA 0250SQ, TPA 0200SQ (See drawing on page: 5-182)					
080	2760089-0000		2	STOP	
180	2940467-0000		2	BRACKET	
360	315105-0136		8	WASHER BRB 4,3X8 RFR	
380	90600-0464		4	INDUCTIVE SWITCH,E2A-M12LS02-WP-B1-TP 5M	
410	2830359-0000		4	STOP	
420	312105-0289		4	SCREW M6S H4X10 A4 70 ISO4017/DIN933	
TPA 1000SQ, TPA 0750SQ (See drawing on page: 5-192)					
080	2760089-0000		2	STOP	
180	2940467-0000		2	BRACKET	
360	315105-0136		8	WASHER BRB 4,3X8 RFR	
380	90600-0464		4	INDUCTIVE SWITCH,E2A-M12LS02-WP-B1-TP 5M	
410	2830359-0000		4	STOP	
420	312105-0289		4	SCREW M6S H4X10 A4 70 ISO4017/DIN933	
Common Parts					
010	2760313-0000		1	PLATE	
020	2829763-0000		2	PLATE	
030	90459-5268		2	DOUBLE ACTING, MINI-ISO, CYL. 25-130	
035	2966902-0000		2	NUT	
040	2829385-0000		4	PLATE	
060	2776589-0000		2	PLATE	
070	2760126-0000		2	SPACER	
090	2881047-0000		2	BUSHING	
100	2760121-0000		4	BAR	
110	2760120-0000		2	PLATE	
120	90600-3222		2	PILOTED FUNCTION VALVE G1/8, 7880 06 10	
130	90166-0081	MM	1750	TUBE 6 MM PA BLUE	
135	90166-0081	MM	640	TUBE 6 MM PA BLUE	
140	342748-0100		1	T-CONNECTION 4MM	
150	90458-2920		8	BUSHING INSERT, JUM-01-16	
160	2772921-0000		1	PLATE	
170	2773080-0000		1	PLATE	
190	2881048-0000		4	WASHER	
200	312105-0455		4	SCREW M6S ISO 4017 M8X30 A480	
210	315105-0165		8	WASHER BRB 8,4X16 RFR	
220	312105-0368		10	SCREW M6S ISO 4017 M6X16 A480	
230	2881044-0000		4	DAMPER	
240	312115-0366		4	SCREW ISO4762 M6X12 A4 80	

Machine Type | Group Description | Used-In | Group Number | Page No

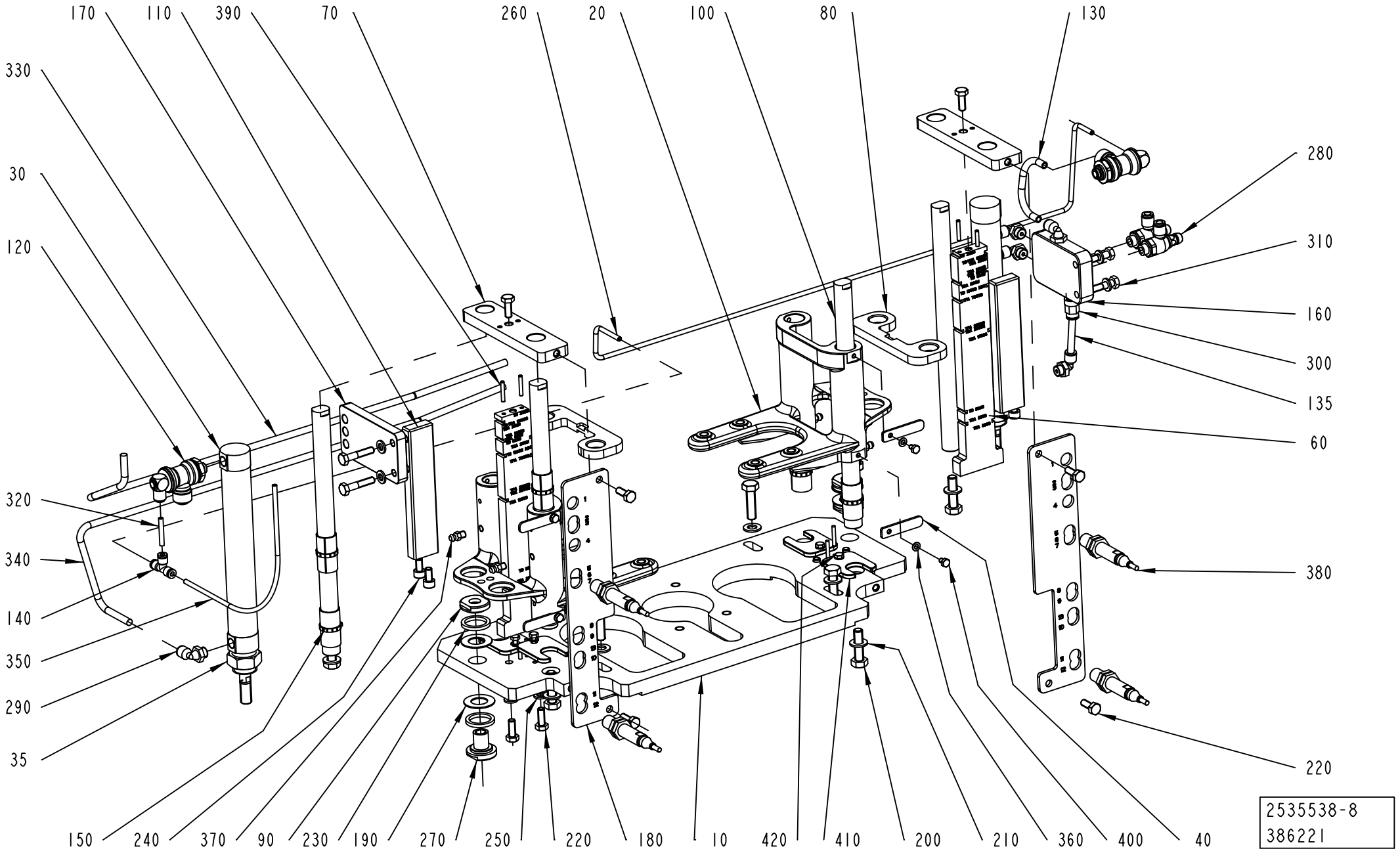
170
110
390
70
260
20
100
80
130
330
30
120
280
310
160
300
135
60
320
340
140
350
290
35
380
220
150
240
370
90
230
190
270
250
220
180
10
420
410
200
210
360
400
40
2535538-8
386221

ECM: 389643 - 20090701
Group number: 2535538-0200
Assembly Drawing: 2535538-8_1_AC

This list covers pages from 5-180 to 5-197

Pos	Part No	UN	Qty	Description	Page No
Common Parts (Cont'd)					
250	315105-0153		8	WASHER BRB 6,4X12 RFR	
260	315400-0016	M	1	TUBE PUN-H-4X0,75-BL	
270	2881046-0000		2	BUSHING	
280	90235-0846		2	THROTTLE CHECK VALVE G1/8", MANUAL, 6	
290	90458-2956		5	ELBOW PIPE JOINT, EXT.THREAD, D=6MM-G1/8	
300	350001-0006		1	PUSH-IN FITTING QS-F-G1/8-6	
310	312105-0372		4	SCREW M6S ISO 4017 M6X25 A480	
320	315400-0016	MM	100	TUBE PUN-H-4X0,75-BL	
330	90166-0081	MM	600	TUBE 6 MM PA BLUE	
340	90166-0081	MM	600	TUBE 6 MM PA BLUE	
350	315400-0016	M	2	TUBE PUN-H-4X0,75-BL	
370	90286-0013		4	GREASE NIPPLE STRAIGHT, H1 M6X1 2346	
390	311103-0238		8	PARALLEL PIN ISO 2338 3M6X20 A1	
400	312105-0285		4	SCREW M6S ISO 4017 M4X6 A470	
430	312105-0453		4	SCREW M6S ISO 4017 M8X25 A480	

Pos	Part No	UN	Qty	Description	Page No

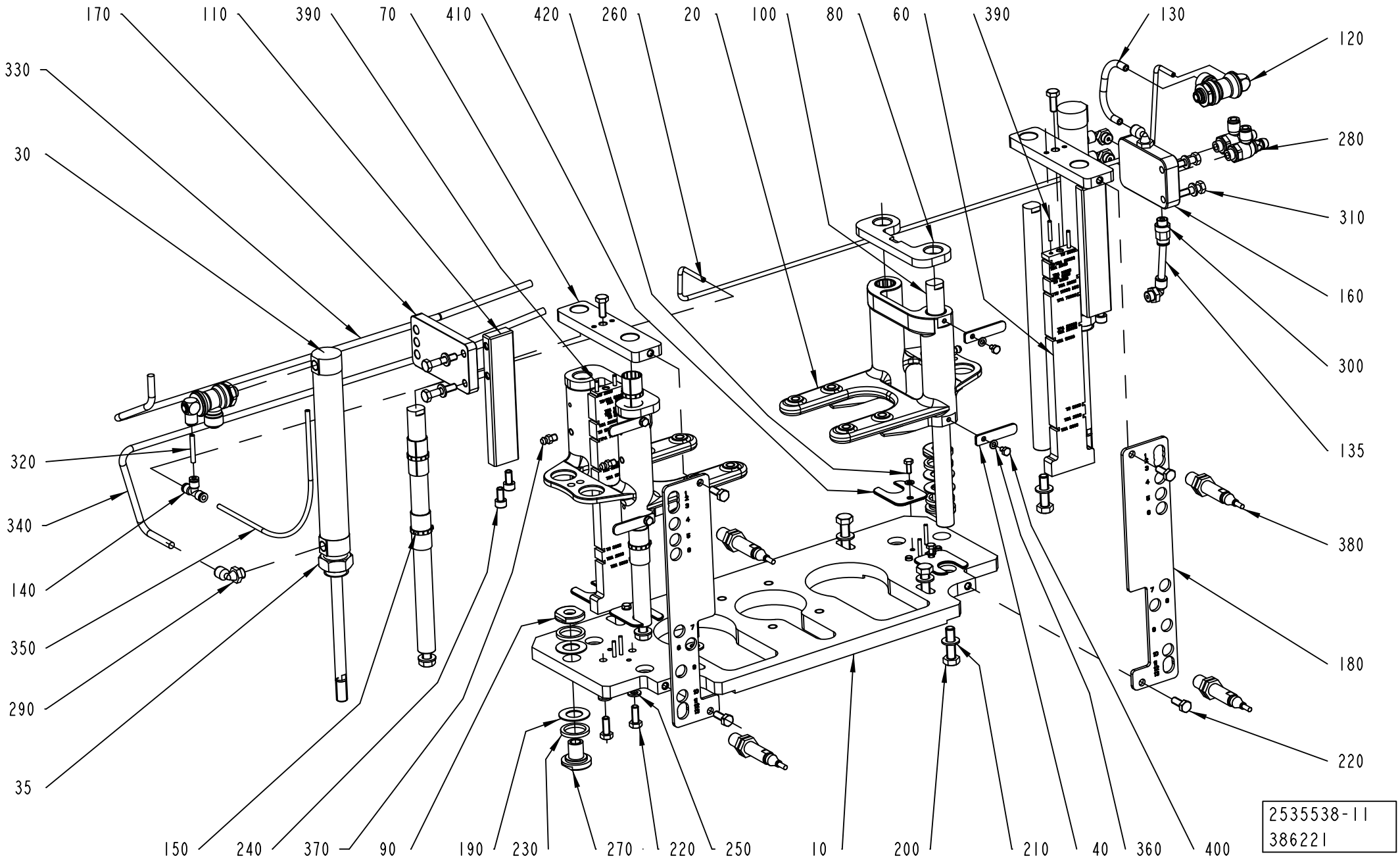
170
110
390
70
410
420
260
20
100
80
60
390
130
120
330
30
280
310
160
300
135
320
340
380
140
350
180
290
220
35
150
240
370
90
190
230
270
220
250
10
200
210
40
360
400
2535538-11
386221

Pos	Part No	UN	Qty	Description	Page No
SEE PREVIOUS LISTS PAGES: 5-181, 5-183.					

Pos	Part No	UN	Qty	Description	Page No

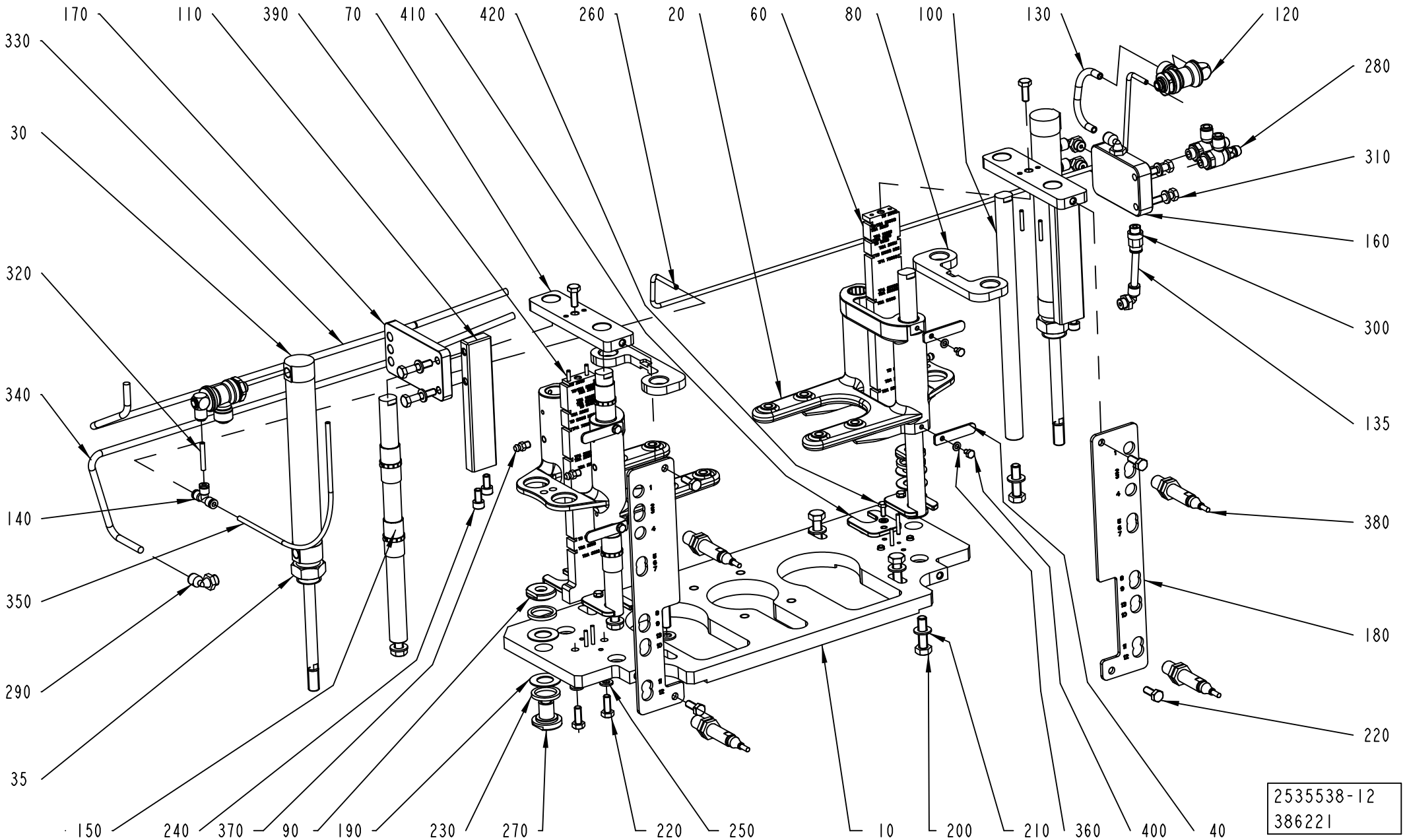
170
110
390
70
410
420
260
20
60
80
100
130
120
330
30
320
340
140
350
290
35
280
310
160
300
135
380
180
220
150
240
370
90
190
230
270
220
250
10
200
210
360
400
40
2535538-12
386221

ECM: 389643 - 20090701
Group number: 2535538-0200
Assembly Drawing: 2535538-12_1_AC

This list covers pages from 5-180 to 5-197

Pos	Part No	UN	Qty	Description	Page No
SEE PREVIOUS LISTS PAGES: 5-181, 5-183.					

Pos	Part No	UN	Qty	Description	Page No

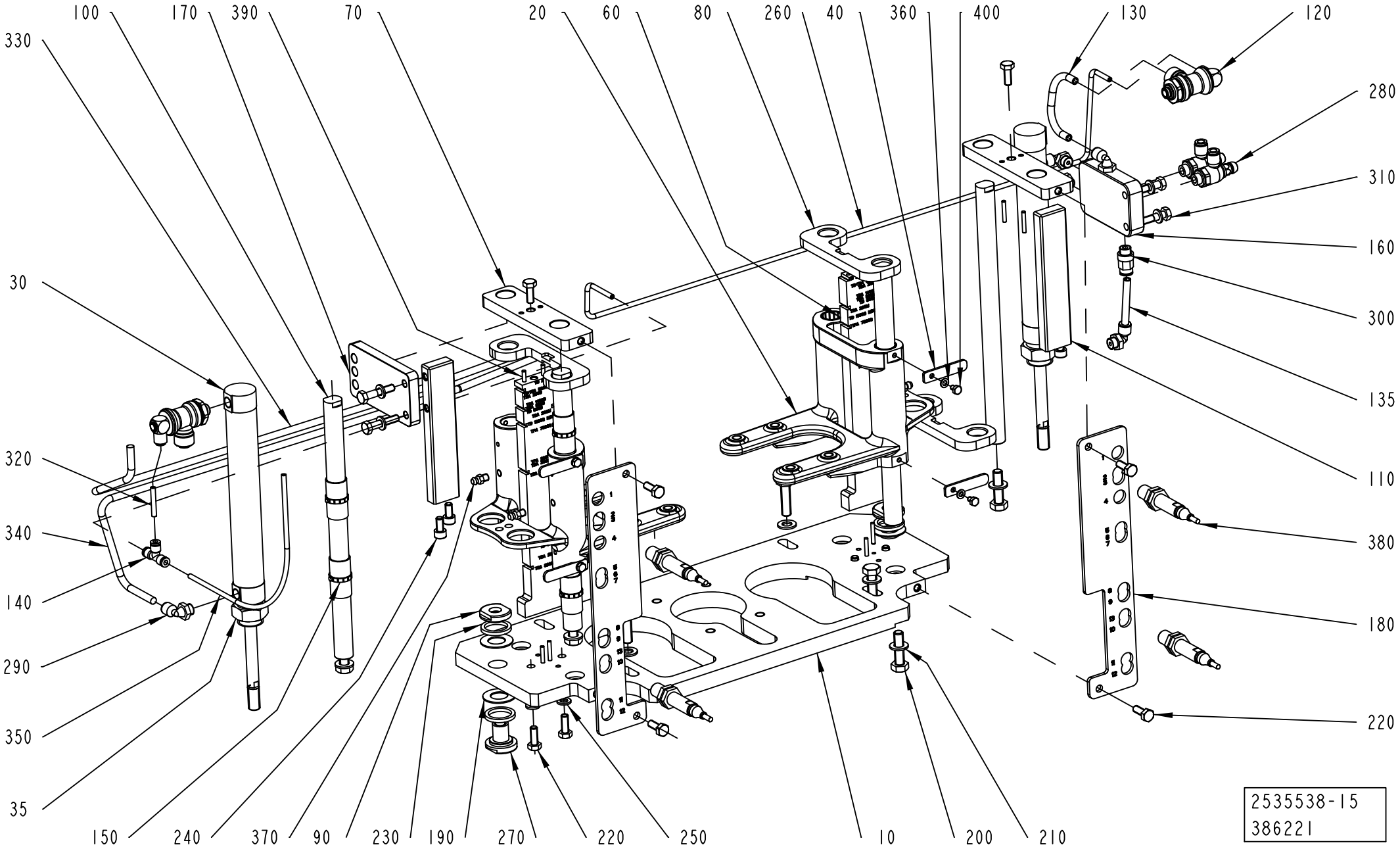
100
170
390
70
20
60
80
260
40
360
400
130
120
330
280
310
160
30
300
135
320
110
340
380
140
180
290
350
220
35
150
240
370
90
230
190
270
220
250
10
200
210
2535538-15
386221

ECM: 389643 - 20090701
Group number: 2535538-0200
Assembly Drawing: 2535538-15_1_AC

This list covers pages from 5-180 to 5-197

Pos	Part No	UN	Qty	Description	Page No
SEE PREVIOUS LISTS PAGES: 5-181, 5-183.					

Pos	Part No	UN	Qty	Description	Page No

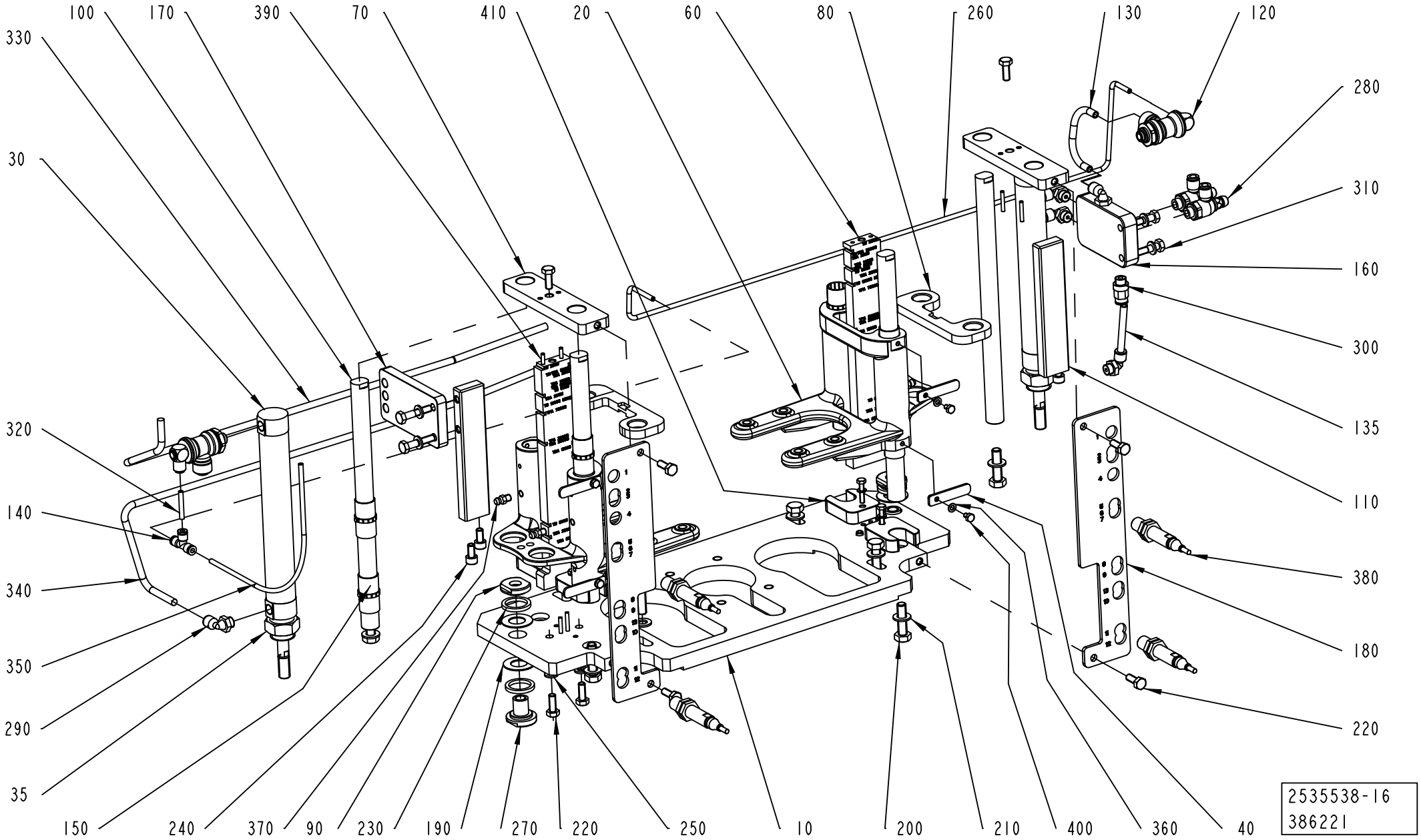
100
170
390
70
410
20
60
80
260
130
120
330
280
30
310
160
300
135
320
110
140
380
340
180
350
220
290
35
150
240
370
90
230
190
270
220
250
10
200
210
400
360
40
2535538-16
386221

Pos	Part No	UN	Qty	Description	Page No
SEE PREVIOUS LISTS PAGES: 5-181, 5-183.					

Pos	Part No	UN	Qty	Description	Page No

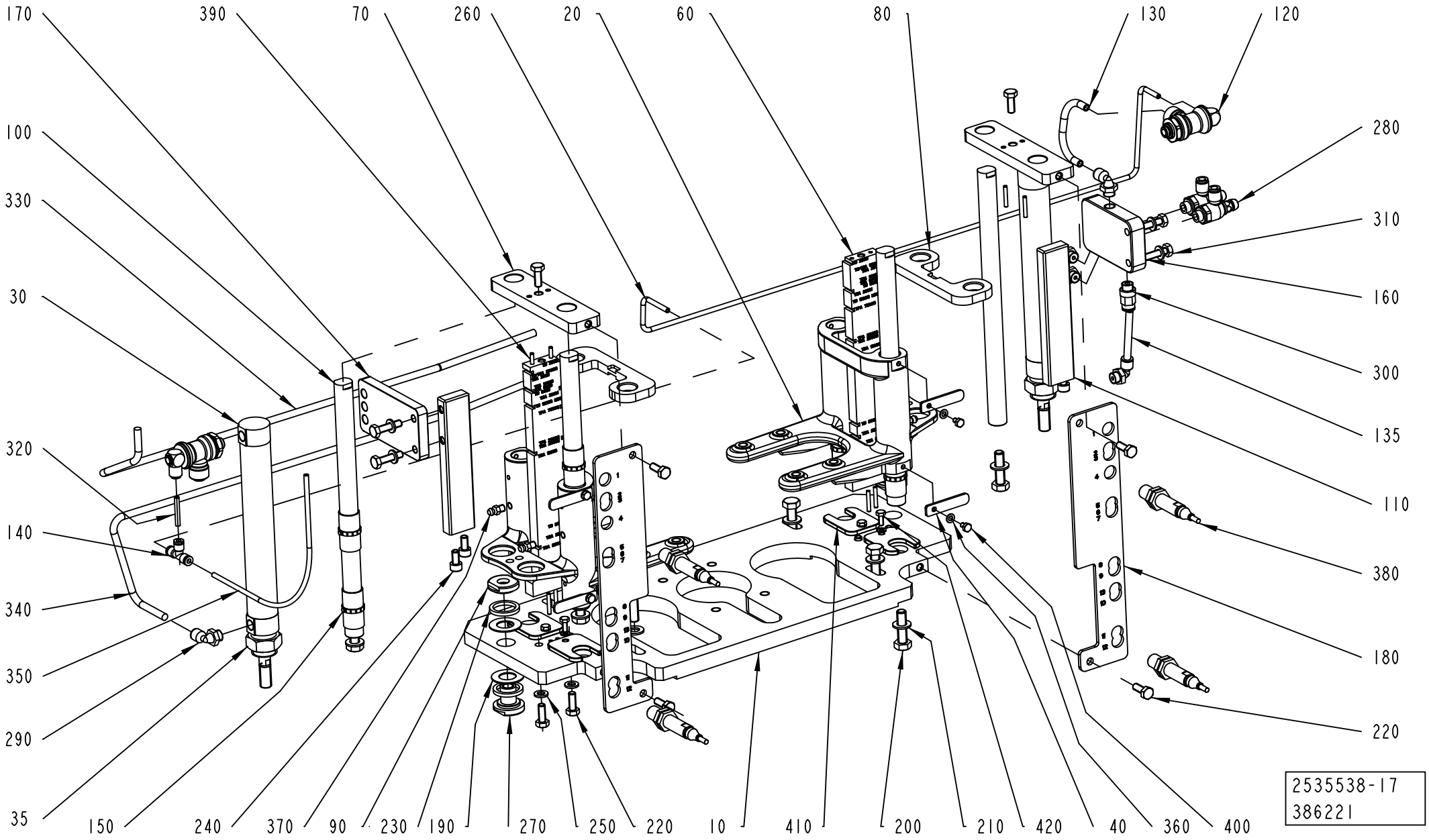
170
390
70
260
20
60
80
130
120
100
330
30
320
140
340
350
290
35
150
240
370
90
230
190
270
250
220
10
410
200
210
420
40
360
400
280
310
160
300
135
110
380
180
220
2535538-17
386221

Pos	Part No	UN	Qty	Description	Page No
SEE PREVIOUS LISTS PAGES: 5-181, 5-183.					

Pos	Part No	UN	Qty	Description	Page No

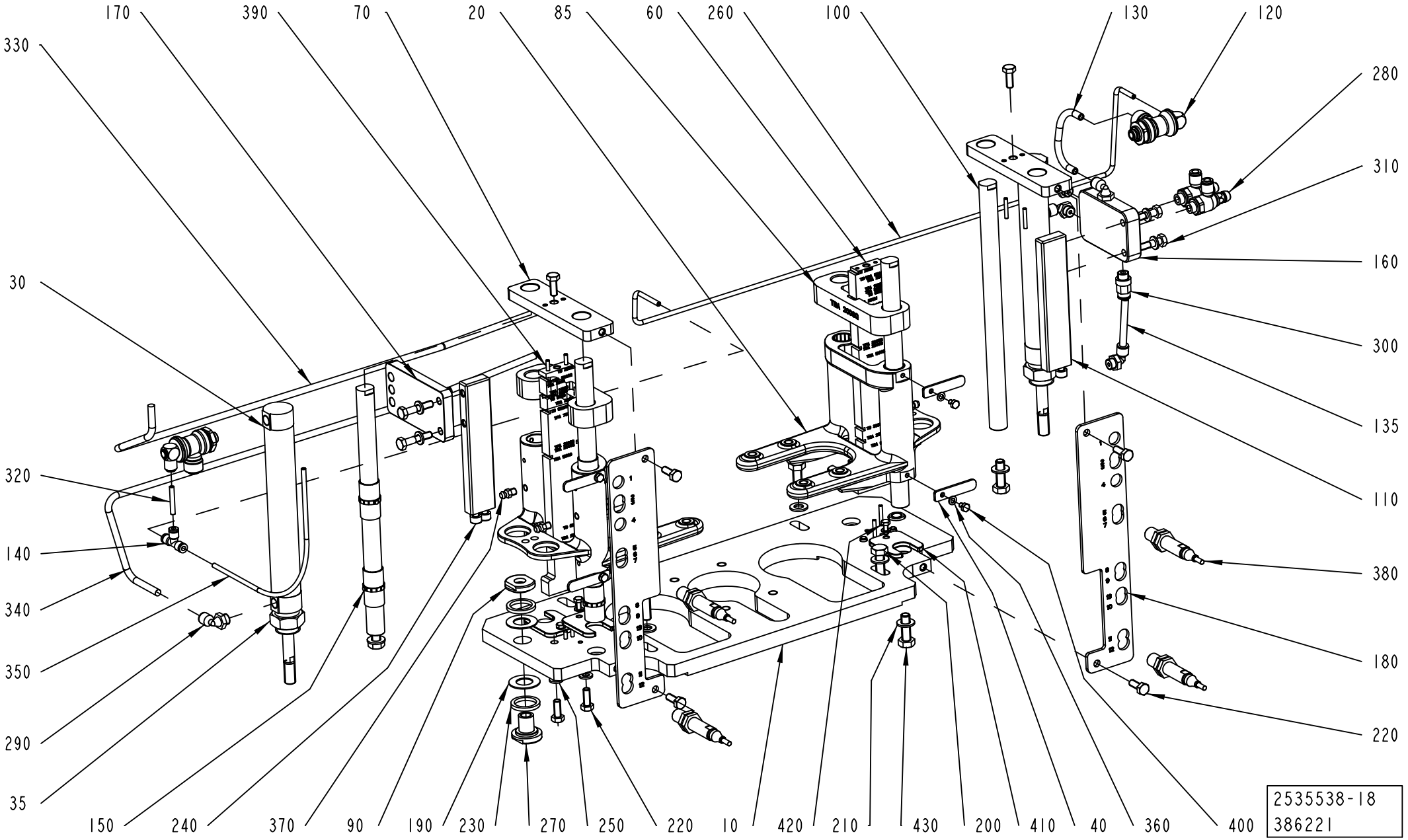
170
390
70
20
85
60
260
100
130
120
330
280
310
30
160
300
135
110
320
140
340
380
350
180
290
220
35
150
240
370
90
190
230
270
250
220
10
420
210
430
200
410
40
360
400
2535538-18
386221

Pos	Part No	UN	Qty	Description	Page No
SEE PREVIOUS LISTS PAGES: 5-181, 5-183.					

Pos	Part No	UN	Qty	Description	Page No

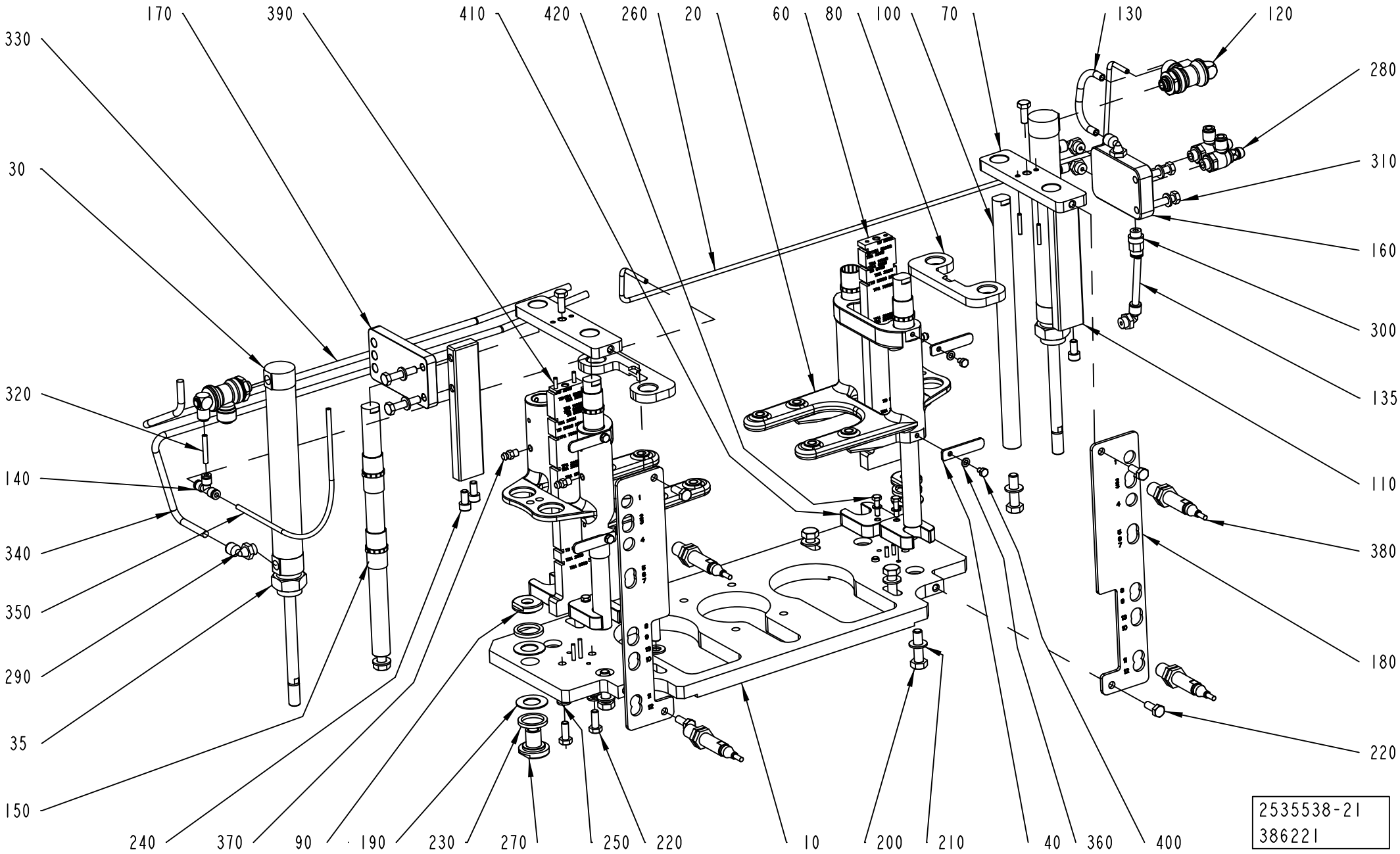
170
390
410
420
260
20
60
80
100
70
130
120
330
280
30
310
160
300
320
135
140
110
340
380
350
180
290
220
35
150
240
370
90
190
230
270
250
220
10
200
210
40
360
400
2535538-21
386221

Pos	Part No	UN	Qty	Description	Page No
SEE PREVIOUS LISTS PAGES: 5-181, 5-183.					

Pos	Part No	UN	Qty	Description	Page No

FLAP HEATER VARIANT

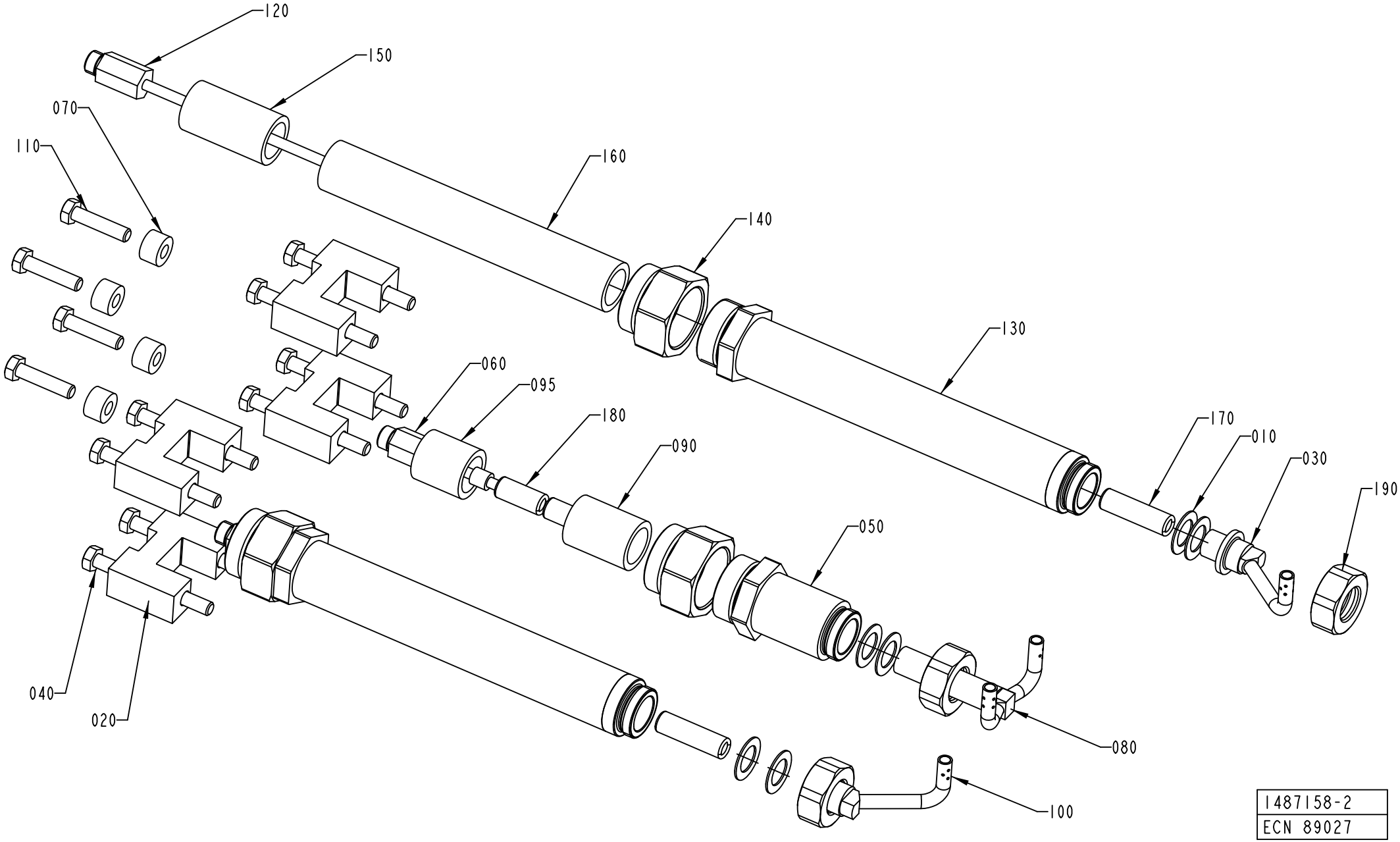

1487158-2
ECN 89027

ECM: 387949 - 20090227
Group number: 1487158-0300
Assembly Drawing: 1487158-2_1_AA

This list covers pages from 5-198 to 5-209

Pos	Part No	UN	Qty	Description	Page No
TBA 1000B NOQC (See drawing on page: 5-198)					
010	263673-0000		6	GASKET	
020	1296153-0000		4	GUIDE	
020	1498163-0000		8	SPACER	
030	1350422-0000		1	NOZZLE	
040	312105-0466		8	SCREW M6S ISO 4014 M8X75 A480	
050	1549389-0000		1	SPACER	
060	1296072-0000		1	EXTENSION	
070	1498163-0000		4	SPACER	
080	1296387-0000		1	NOZZLE	
090	23765-0003		1	INSULATING PIPE	
095	23765-0005		1	INSULATING PIPE	
100	1350421-0000		1	NOZZLE	
110	312109-0457		4	SCREW M6S ISO 4017 M8X35 A480	
120	1285310-0000		2	EXTENSION	
130	2545135-0000		2	SPACER	
140	1549390-0000		3	NUT	
150	23765-0001		2	INSULATING PIPE	
150	23765-0004		2	INSULATING PIPE	
155	23765-0004		2	INSULATING PIPE	
160	23765-0005		2	INSULATING PIPE	
170	252766-0002		2	INSULATING PIPE	
180	252766-0001		2	INSULATING PIPE	
190	1317085-0000		2	NUT	
TBA 1000S (See drawing on page: 5-198)					
010	263673-0000		6	GASKET	
020	1348043-0000		8	SPACER	
030	1296068-0000		1	NOZZLE	
040	312109-0460		8	SCREW M6S ISO 4017 M8X45 A480	
050	1549389-0000		1	SPACER	
060	1296072-0000		1	EXTENSION	
070	1498163-0000		4	SPACER	
080	1296066-0000		1	NOZZLE	
090	23765-0003		1	INSULATING PIPE	
095	23765-0005		1	INSULATING PIPE	
100	1296067-0000		1	NOZZLE	
110	312109-0457		4	SCREW M6S ISO 4017 M8X35 A480	
120	1285310-0000		2	EXTENSION	
130	2545135-0000		2	SPACER	
140	1549390-0000		3	NUT	
150	23765-0001		2	INSULATING PIPE	
155	23765-0004		2	INSULATING PIPE	
160	23765-0005		2	INSULATING PIPE	
170	252766-0002		2	INSULATING PIPE	
180	252766-0001		2	INSULATING PIPE	
190	1317085-0000		2	NUT	
TBA 1000SQ NOQC (See drawing on page: 5-198)					
010	263673-0000		6	GASKET	
020	1285874-0000		8	SPACER	
030	1498147-0000		1	NOZZLE	
040	312109-0457		8	SCREW M6S ISO 4017 M8X35 A480	
050	1549389-0000		1	SPACER	
060	1296072-0000		1	EXTENSION	
070	1285874-0000		4	SPACER	
080	1490039-0000		1	NOZZLE	
090	23765-0003		1	INSULATING PIPE	
095	23765-0005		1	INSULATING PIPE	
100	1498146-0000		1	NOZZLE	
110	312109-0457		4	SCREW M6S ISO 4017 M8X35 A480	
120	1285310-0000		2	EXTENSION	
130	2545135-0000		2	SPACER	
140	1549390-0000		3	NUT	
150	23765-0004		2	INSULATING PIPE	
150	23765-0001		2	INSULATING PIPE	
155	23765-0004		2	INSULATING PIPE	
160	23765-0005		2	INSULATING PIPE	
170	252766-0002		2	INSULATING PIPE	
180	252766-0001		2	INSULATING PIPE	
190	1317085-0000		2	NUT	
TBA 1500S (See drawing on page: 5-198)					
010	263673-0000		9	GASKET	
020	1317804-0000		8	SPACER	
030	1317802-0000		1	NOZZLE	
040	312109-0461		8	SCREW M6S ISO 4017 M8X50 A480	
050	2545433-0000		1	SPACER	
060	1285870-0000		1	EXTENSION	
070	2545537-0000		4	SPACER	
080	1317801-0000		1	NOZZLE	
100	1317803-0000		1	NOZZLE	
110	312109-0463		4	SCREW M6S ISO 4017 M8X60 A480	
120	1285310-0000		2	EXTENSION	
130	2545135-0000		2	SPACER	
140	1549390-0000		3	NUT	
150	23765-0001		2	INSULATING PIPE	

Machine Type | Group Description | Used-In | Group Number | Page No

FLAP HEATER VARIANT

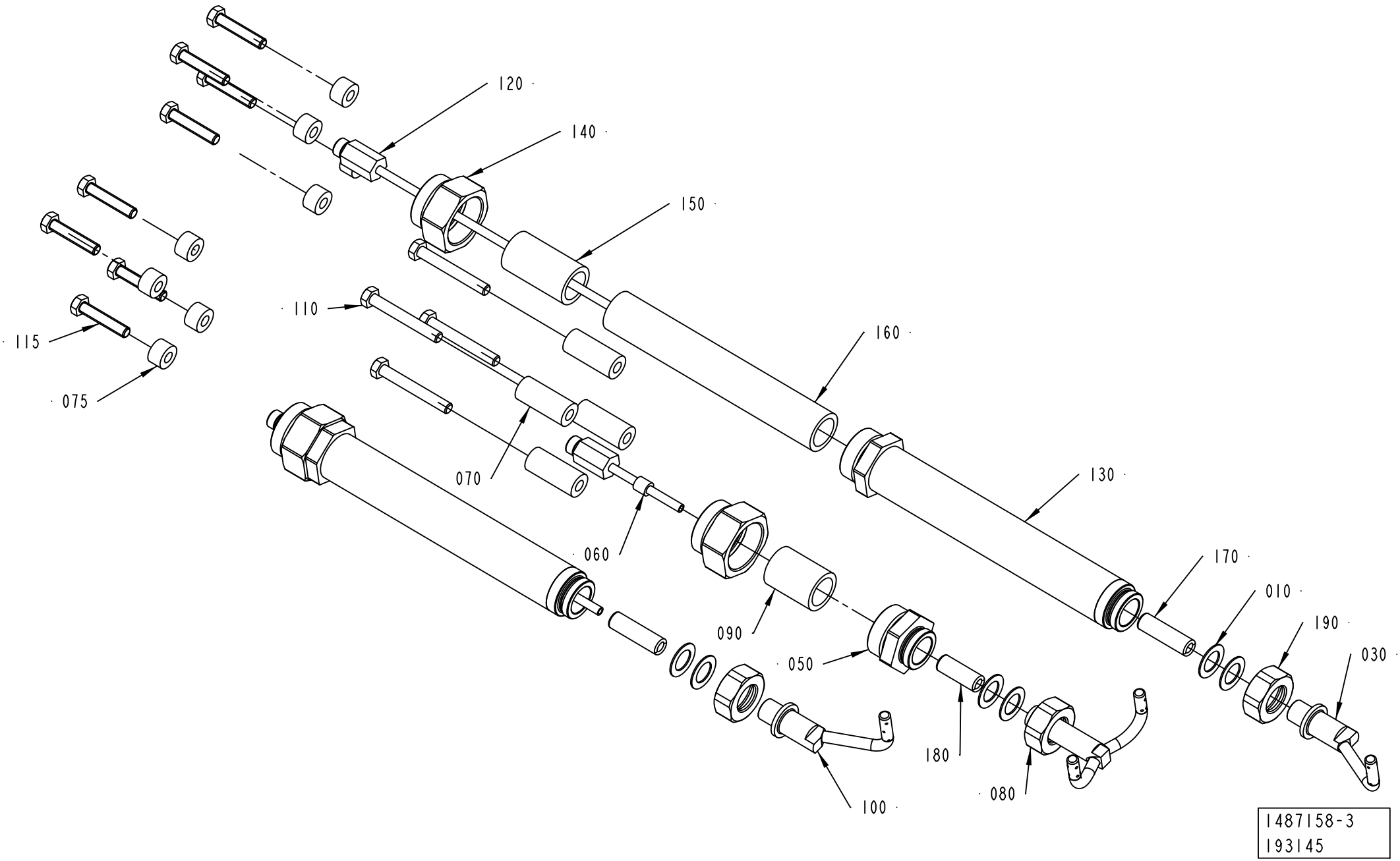

Pos	Part No	UN	Qty	Description	Page No
TBA 1500S (Cont'd) (See drawing on page: 5-198)					
150	23765-0004		2	INSULATING PIPE	
155	23765-0004		2	INSULATING PIPE	
160	23765-0005		2	INSULATING PIPE	
170	252766-0002		2	INSULATING PIPE	
180	252766-0001		2	INSULATING PIPE	
190	1317085-0000		2	NUT	
TBA 1890S QC, TBA 2000S QC, TBA 1400B (See drawing on page: 5-200)					
010	263673-0000		9	GASKET	
030	2598500-0000		1	NOZZLE	
050	2545433-0000		1	SPACER	
060	1296072-0000		1	EXTENSION	
070	2618683-0000		4	SPACER	
075	1498163-0000		8	SPACER	
080	2598498-0000		1	NOZZLE	
100	2598499-0000		1	NOZZLE	
110	312105-0464		4	SCREW M6S ISO 4014 M8X65 A480	
115	312109-0459		8	SCREW M6S ISO 4017 M8X40 A480	
120	2598503-0000		2	EXTENSION	
130	2545135-0000		2	SPACER	
140	1549390-0000		3	NUT	
150	23765-0001		2	INSULATING PIPE	
150	23765-0004		2	INSULATING PIPE	
155	23765-0004		2	INSULATING PIPE	
160	23765-0005		2	INSULATING PIPE	
170	252766-0002		2	INSULATING PIPE	
180	252766-0004		1	INSULATING PIPE	
190	1317085-0000		2	NUT	
TPA 0200SQ QC, TPA 0250SQ QC (See drawing on page: 5-198)					
010	263673-0000		6	GASKET	
020	2674242-0000		8	SPACER	
030	1346679-0000		1	NOZZLE	
040	312105-0467		8	SCREW M6S ISO 4014 M8X80 A480	
050	1549389-0000		1	SPACER	
060	1296072-0000		1	EXTENSION	
070	2543240-0000		4	SPACER	
080	2524339-0000		1	NOZZLE	
090	23765-0003		1	INSULATING PIPE	
095	23765-0005		1	INSULATING PIPE	
100	1346678-0000		1	NOZZLE	
110	312109-0457		4	SCREW M6S ISO 4017 M8X35 A480	
120	1285310-0000		2	EXTENSION	
130	2545135-0000		2	SPACER	
140	1549390-0000		3	NUT	
150	23765-0001		2	INSULATING PIPE	
150	23765-0004		2	INSULATING PIPE	
155	23765-0004		2	INSULATING PIPE	
160	23765-0005		2	INSULATING PIPE	
170	252766-0001		2	INSULATING PIPE	
180	252766-0001		1	INSULATING PIPE	
190	1317085-0000		2	NUT	
TPA 0250SQ NOQC (See drawing on page: 5-198)					
010	263673-0000		6	GASKET	
020	1558447-0000		8	SPACER	
020	1498163-0000		8	SPACER	
030	1346679-0000		1	NOZZLE	
040	312105-0455		4	SCREW M6S ISO 4017 M8X30 A480	
050	1549389-0000		1	SPACER	
060	1296072-0000		1	EXTENSION	
070	2543240-0000		4	SPACER	
070	1498163-0000		4	SPACER	
080	2524339-0000		1	NOZZLE	
090	23765-0003		1	INSULATING PIPE	
095	23765-0005		1	INSULATING PIPE	
100	1346678-0000		1	NOZZLE	
110	312109-0457		4	SCREW M6S ISO 4017 M8X35 A480	
120	1346646-0000		2	EXTENSION	
130	1549388-0000		2	SPACER	
140	1549390-0000		3	NUT	
150	23765-0002		2	INSULATING PIPE	
160	23765-0005		4	INSULATING PIPE	
170	252766-0001		2	INSULATING PIPE	
180	252766-0001		1	INSULATING PIPE	
TPA 0330SQ (See drawing on page: 5-198)					
010	263673-0000		6	GASKET	
020	1498163-0000		8	SPACER	
030	1532284-0000		1	NOZZLE	
040	312109-0460		8	SCREW M6S ISO 4017 M8X45 A480	
050	1549389-0000		1	SPACER	
060	1296072-0000		1	EXTENSION	
070	1285874-0000		4	SPACER	
070	1498163-0000		4	SPACER	
080	1532285-0000		1	NOZZLE	
090	23765-0003		1	INSULATING PIPE	

FLAP HEATER VARIANT

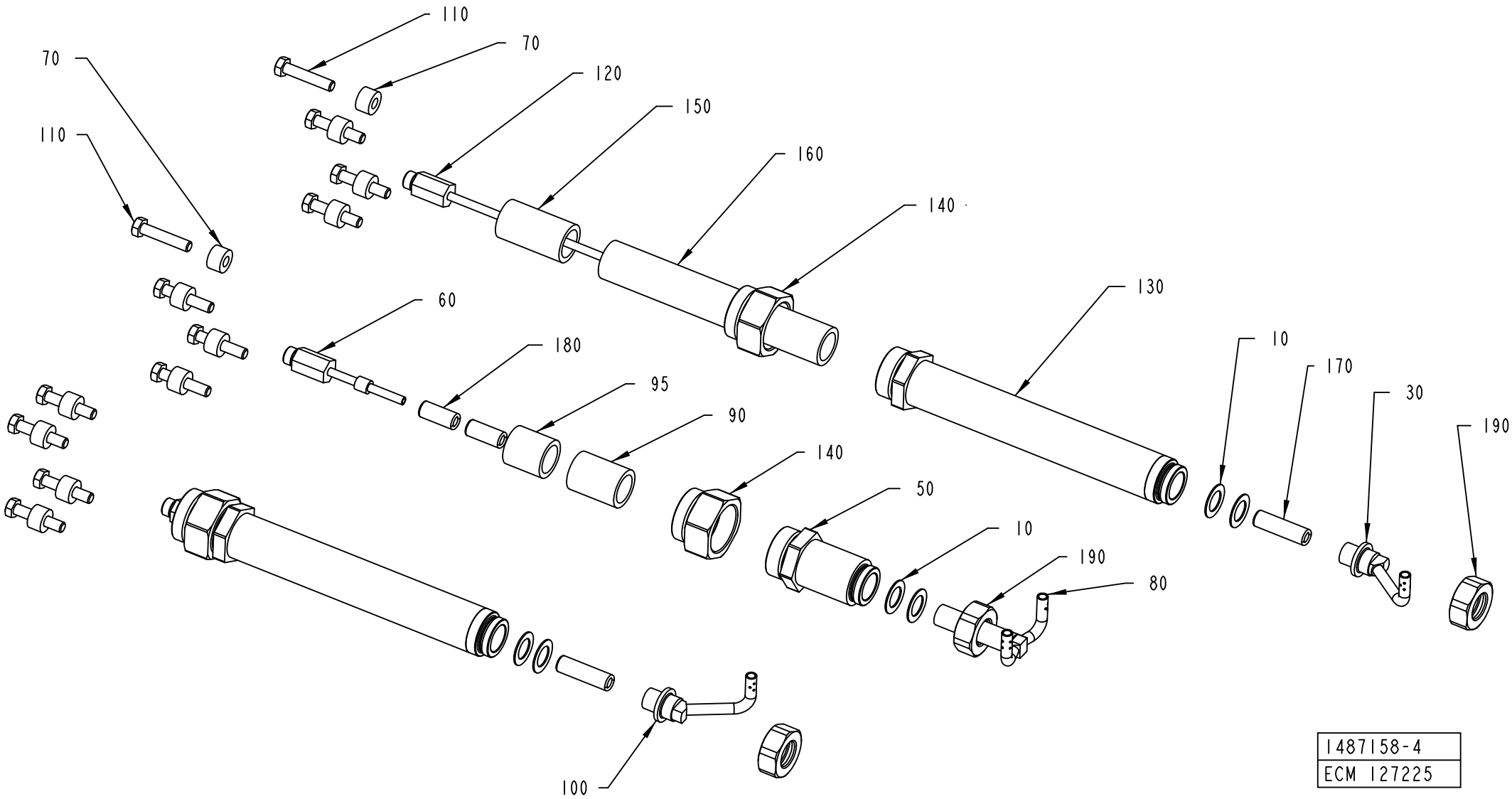

Pos	Part No	UN	Qty	Description	Page No
TPA 0330SQ (Cont'd) (See drawing on page: 5-198)					
095	23765-0005		1	INSULATING PIPE	
100	1532286-0000		1	NOZZLE	
110	312109-0457		4	SCREW M6S ISO 4017 M8X35 A480	
120	1346646-0000		2	EXTENSION	
130	1549388-0000		2	SPACER	
140	1549390-0000		3	NUT	
150	23765-0002		2	INSULATING PIPE	
160	23765-0005		4	INSULATING PIPE	
170	252766-0001		2	INSULATING PIPE	
180	252766-0001		2	INSULATING PIPE	
190	1317085-0000		2	NUT	
TPA 0500SQ (See drawing on page: 5-198)					
010	263673-0000		6	GASKET	
020	1285874-0000		8	SPACER	
030	1558328-0000		1	NOZZLE	
040	312109-0457		8	SCREW M6S ISO 4017 M8X35 A480	
050	1549389-0000		1	SPACER	
060	1296072-0000		1	EXTENSION	
070	1285874-0000		4	SPACER	
080	2501612-0000		1	NOZZLE	
090	23765-0003		1	INSULATING PIPE	
095	23765-0005		1	INSULATING PIPE	
100	1558329-0000		1	NOZZLE	
110	312109-0457		4	SCREW M6S ISO 4017 M8X35 A480	
120	1346646-0000		2	EXTENSION	
130	1549388-0000		2	SPACER	
140	1549390-0000		3	NUT	
150	23765-0002		2	INSULATING PIPE	
160	23765-0005		4	INSULATING PIPE	
170	252766-0002		2	INSULATING PIPE	
180	252766-0001		2	INSULATING PIPE	
190	1317085-0000		2	NUT	
TPA 1000SQ NOQC (See drawing on page: 5-198)					
010	263673-0000		7	GASKET	
020	1519339-0000		8	SPACER	
030	1549127-0000		1	NOZZLE	
040	312105-0465		8	SCREW M6S ISO 4014 M8X70 A480	
050	2545433-0000		1	SPACER	
060	1285870-0000		1	EXTENSION	
070	1334632-0000		4	SPACER	
080	1519336-0000		1	NOZZLE	
090	23765-0004		1	INSULATING PIPE	
100	1549126-0000		1	NOZZLE	
110	312109-0461		4	SCREW M6S ISO 4017 M8X50 A480	
120	1285310-0000		2	EXTENSION	
130	2545135-0000		2	SPACER	
140	1549390-0000		3	NUT	
150	23765-0004		2	INSULATING PIPE	
150	23765-0001		2	INSULATING PIPE	
155	23765-0004		2	INSULATING PIPE	
160	23765-0005		2	INSULATING PIPE	
170	252766-0002		2	INSULATING PIPE	
180	252766-0002		1	INSULATING PIPE	
190	1317085-0000		2	NUT	
TPA 1000SQ QC, TPA 0750SQ QC (See drawing on page: 5-200)					
010	263673-0000		7	GASKET	
020	2522196-0000		8	SPACER	
030	1549127-0000		1	NOZZLE	
040	312109-0460		8	SCREW M6S ISO 4017 M8X45 A480	
050	2545433-0000		1	SPACER	
060	1285870-0000		1	EXTENSION	
070	1334632-0000		4	SPACER	
080	1519336-0000		1	NOZZLE	
090	23765-0004		1	INSULATING PIPE	
100	1549126-0000		1	NOZZLE	
110	312109-0461		4	SCREW M6S ISO 4017 M8X50 A480	
120	1285310-0000		2	EXTENSION	
130	2545135-0000		2	SPACER	
140	1549390-0000		3	NUT	
150	23765-0004		2	INSULATING PIPE	
150	23765-0001		2	INSULATING PIPE	
155	23765-0004		2	INSULATING PIPE	
160	23765-0005		2	INSULATING PIPE	
170	252766-0002		2	INSULATING PIPE	
180	252766-0002		1	INSULATING PIPE	
190	1317085-0000		2	NUT	
TBA 0200B NOQC (See drawing on page: 5-198)					
010	263673-0000		6	GASKET	
020	1346642-0000		4	SPACER	
030	1346644-0000		1	NOZZLE	
040	312105-0471		8	SCREW M6S ISO 4014 M8X100 A480	
050	1549389-0000		1	SPACER	
060	1296072-0000		1	EXTENSION	

Machine Type | Group Description | Used-In | Group Number | Page No

FLAP HEATER VARIANT

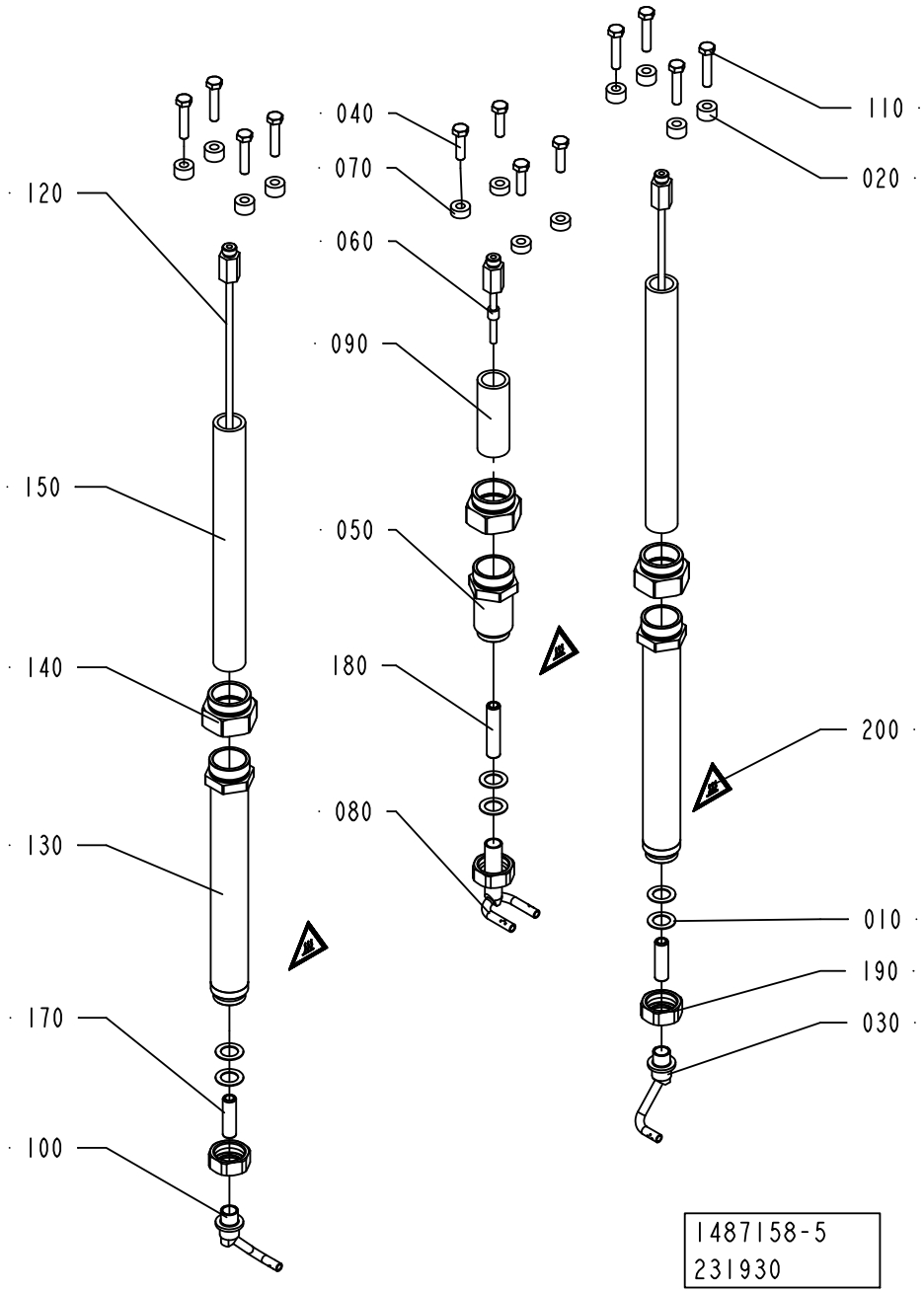

ECM: 387949 - 20090227
Group number: 1487158-0300
Assembly Drawing: 1487158-5_1_AB

This list covers pages from 5-198 to 5-209

Pos	Part No	UN	Qty	Description	Page No
TBA 0200B NOQC (Cont'd) (See drawing on page: 5-198)					
070	1285874-0000		4	SPACER	
080	1346581-0000		1	NOZZLE	
090	23765-0003		1	INSULATING PIPE	
095	23765-0005		1	INSULATING PIPE	
100	1346643-0000		1	NOZZLE	
110	312109-0457		4	SCREW M6S ISO 4017 M8X35 A480	
120	1346646-0000		2	EXTENSION	
130	1549388-0000		2	SPACER	
140	1549390-0000		3	NUT	
150	23765-0002		2	INSULATING PIPE	
160	23765-0005		4	INSULATING PIPE	
170	252766-0001		2	INSULATING PIPE	
180	252766-0001		2	INSULATING PIPE	
190	1317085-0000		2	NUT	
TBA 0200B QC, TBA 0330S QC, TBA 0250B QC (See drawing on page: 5-198)					
010	263673-0000		5	GASKET	
020	1285874-0000		8	SPACER	
030	1346644-0000		1	NOZZLE	
040	312105-0457		4	SCREW M6S ISO 4014 M8X35 A480	
050	1549389-0000		1	SPACER	
060	1296072-0000		1	EXTENSION	
070	2545006-0000		4	SPACER	
080	1346581-0000		1	NOZZLE	
090	23765-0003		1	INSULATING PIPE	
095	23765-0005		1	INSULATING PIPE	
100	1346643-0000		1	NOZZLE	
110	312105-0455		4	SCREW M6S ISO 4017 M8X30 A480	
120	1285310-0000		2	EXTENSION	
130	2545135-0000		2	SPACER	
140	1549390-0000		3	NUT	
150	23765-0004		2	INSULATING PIPE	
150	23765-0001		2	INSULATING PIPE	
155	23765-0004		2	INSULATING PIPE	
160	23765-0005		2	INSULATING PIPE	
170	252766-0002		2	INSULATING PIPE	
180	252766-0001		2	INSULATING PIPE	
190	1317085-0000		2	NUT	
TBA 0200M QC, TBA 0250S QC (See drawing on page: 5-198)					
010	263673-0000		6	GASKET	
020	1498163-0000		8	SPACER	
030	1346644-0000		1	NOZZLE	
050	1549389-0000		1	SPACER	
060	1296072-0000		1	EXTENSION	
070	1285874-0000		4	SPACER	
080	2545236-0000		1	NOZZLE	
090	23765-0003		1	INSULATING PIPE	
095	23765-0005		1	INSULATING PIPE	
100	1346643-0000		1	NOZZLE	
110	312105-0455		4	SCREW M6S ISO 4017 M8X30 A480	
120	1285310-0000		2	EXTENSION	
130	2545135-0000		2	SPACER	
140	1549390-0000		3	NUT	
150	23765-0001		2	INSULATING PIPE	
150	23765-0004		2	INSULATING PIPE	
155	23765-0004		2	INSULATING PIPE	
160	23765-0005		2	INSULATING PIPE	
170	252766-0002		2	INSULATING PIPE	
180	252766-0001		2	INSULATING PIPE	
190	1317085-0000		2	NUT	
TBA 0200S (See drawing on page: 5-198)					
010	263673-0000		6	GASKET	
020	1285874-0000		8	SPACER	
030	1346679-0000		1	NOZZLE	
040	312109-0457		8	SCREW M6S ISO 4017 M8X35 A480	
050	1549389-0000		1	SPACER	
060	1296072-0000		1	EXTENSION	
070	1285874-0000		4	SPACER	
080	1346580-0000		1	NOZZLE	
090	23765-0003		1	INSULATING PIPE	
095	23765-0005		1	INSULATING PIPE	
100	1346678-0000		1	NOZZLE	
110	312109-0457		4	SCREW M6S ISO 4017 M8X35 A480	
120	1346646-0000		2	EXTENSION	
130	1549388-0000		2	SPACER	
140	1549390-0000		3	NUT	
150	23765-0002		2	INSULATING PIPE	
160	23765-0005		4	INSULATING PIPE	
170	252766-0001		2	INSULATING PIPE	
180	252766-0001		1	INSULATING PIPE	
190	1317085-0000		2	NUT	
TBA 0200SQ QC, TBA 0250SQ QC (See drawing on page: 5-206)					
010	263673-0000		6	GASKET	
020	2545006-0000		8	SPACER	

Machine Type | Group Description | Used-In | Group Number | Page No

FLAP HEATER VARIANT

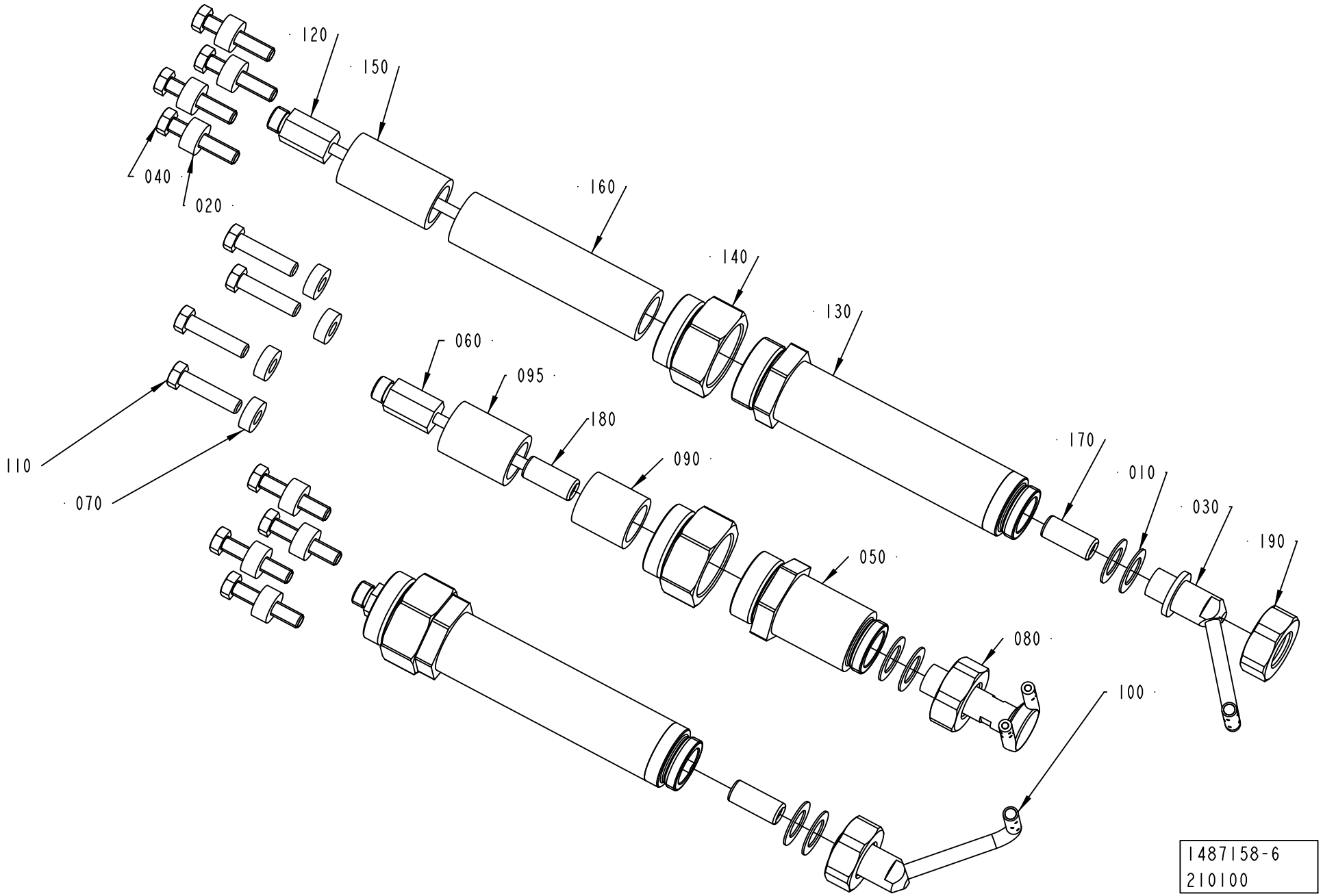

ECM: 387949 - 20090227
Group number: 1487158-0300
Assembly Drawing: 1487158-6_1_AA

This list covers pages from 5-198 to 5-209

Pos	Part No	UN	Qty	Description	Page No
TBA 0200SQ QC, TBA 0250SQ QC (Cont'd) (See drawing on page: 5-206)					
030	2676617-0000		1	NOZZLE	
040	312109-0457		8	SCREW M6S ISO 4017 M8X35 A480	
050	1549389-0000		1	SPACER	
060	1296072-0000		1	EXTENSION	
070	1523497-0000		4	SPACER	
080	2676616-0000		1	NOZZLE	
090	23765-0003		1	INSULATING PIPE	
095	23765-0005		1	INSULATING PIPE	
100	2676615-0000		1	NOZZLE	
110	312105-0455		4	SCREW M6S ISO 4017 M8X30 A480	
120	1346646-0000		2	EXTENSION	
130	1549388-0000		2	SPACER	
140	1549390-0000		3	NUT	
150	23765-0002		2	INSULATING PIPE	
160	23765-0005		4	INSULATING PIPE	
170	252766-0001		2	INSULATING PIPE	
180	252766-0001		1	INSULATING PIPE	
190	1317085-0000		2	NUT	
TBA 0250B NOQC (See drawing on page: 5-198)					
010	263673-0000		6	GASKET	
020	1346641-0000		4	SPACER	
030	1346644-0000		1	NOZZLE	
040	312105-0466		8	SCREW M6S ISO 4014 M8X75 A480	
050	1549389-0000		1	SPACER	
060	1296072-0000		1	EXTENSION	
070	1285874-0000		4	SPACER	
080	1346581-0000		1	NOZZLE	
090	23765-0003		1	INSULATING PIPE	
095	23765-0005		1	INSULATING PIPE	
100	1346643-0000		1	NOZZLE	
110	312109-0457		4	SCREW M6S ISO 4017 M8X35 A480	
120	1346646-0000		2	EXTENSION	
130	1549388-0000		2	SPACER	
140	1549390-0000		3	NUT	
150	23765-0002		2	INSULATING PIPE	
160	23765-0005		4	INSULATING PIPE	
170	252766-0001		2	INSULATING PIPE	
180	252766-0001		2	INSULATING PIPE	
190	1317085-0000		2	NUT	
TBA 0500B NOQC (See drawing on page: 5-198)					
010	263673-0000		6	GASKET	
020	1296153-0000		4	GUIDE	
030	1350422-0000		1	NOZZLE	
040	312105-0466		8	SCREW M6S ISO 4014 M8X75 A480	
050	1549389-0000		1	SPACER	
060	1296072-0000		1	EXTENSION	
080	1296387-0000		1	NOZZLE	
090	23765-0003		1	INSULATING PIPE	
095	23765-0005		1	INSULATING PIPE	
100	1350421-0000		1	NOZZLE	
110	312109-0457		4	SCREW M6S ISO 4017 M8X35 A480	
120	1346646-0000		2	EXTENSION	
130	1549388-0000		2	SPACER	
140	1549390-0000		3	NUT	
150	23765-0002		2	INSULATING PIPE	
160	23765-0005		4	INSULATING PIPE	
170	252766-0001		2	INSULATING PIPE	
180	252766-0001		2	INSULATING PIPE	
190	1317085-0000		2	NUT	
TBA 0500B QC, TBA 1000B QC (See drawing on page: 5-202)					
010	263673-0000		6	GASKET	
030	1350422-0000		1	NOZZLE	
050	1549389-0000		1	SPACER	
060	1296072-0000		1	EXTENSION	
070	1498163-0000		12	SPACER	
080	1296387-0000		1	NOZZLE	
090	23765-0003		1	INSULATING PIPE	
090	23765-0004		1	INSULATING PIPE	
095	23765-0005		1	INSULATING PIPE	
100	1350421-0000		1	NOZZLE	
110	312105-0459		12	SCREW M6S ISO 4014 M8X40 A480	
110	312109-0457		12	SCREW M6S ISO 4017 M8X35 A480	
120	1285310-0000		2	EXTENSION	
130	2545135-0000		2	SPACER	
140	1549390-0000		3	NUT	
150	23765-0001		2	INSULATING PIPE	
150	23765-0004		2	INSULATING PIPE	
155	23765-0004		2	INSULATING PIPE	
160	23765-0005		2	INSULATING PIPE	
170	252766-0002		2	INSULATING PIPE	
180	252766-0001		2	INSULATING PIPE	
190	1317085-0000		2	NUT	
TBA 0500S (See drawing on page: 5-198)					

Machine Type | Group Description | Used-In | Group Number | Page No

See previous drawings pages: 5-198, 5-200, 5-202, 5-204, 5-206.

Pos	Part No	UN	Qty	Description	Page No
TBA 0500S (Cont'd) (See drawing on page: 5-198)					
010	263673-0000		6	GASKET	
020	1511692-0000		8	SPACER	
030	1499446-0000		1	NOZZLE	
040	312105-0464		8	SCREW M6S ISO 4014 M8X65 A480	
050	1549389-0000		1	SPACER	
060	1296072-0000		1	EXTENSION	
070	1523497-0000		4	SPACER	
080	1499445-0000		1	NOZZLE	
090	23765-0004		1	INSULATING PIPE	
090	23765-0003		1	INSULATING PIPE	
095	23765-0005		1	INSULATING PIPE	
100	1499444-0000		1	NOZZLE	
110	312109-0457		4	SCREW M6S ISO 4017 M8X35 A480	
120	1285310-0000		2	EXTENSION	
130	2545135-0000		2	SPACER	
140	1549390-0000		3	NUT	
150	23765-0004		2	INSULATING PIPE	
150	23765-0001		2	INSULATING PIPE	
155	23765-0004		2	INSULATING PIPE	
160	23765-0005		2	INSULATING PIPE	
170	252766-0002		2	INSULATING PIPE	
180	252766-0001		2	INSULATING PIPE	
190	1317085-0000		2	NUT	
TBA 0500SQ, TBA 1000SQ QC (See drawing on page: 5-204)					
010	263673-0000		6	GASKET	
020	1498163-0000		8	SPACER	
030	1498147-0000		1	NOZZLE	
040	312105-0455		4	SCREW M6S ISO 4017 M8X30 A480	
050	1549389-0000		1	SPACER	
060	1296072-0000		1	EXTENSION	
070	1285874-0000		4	SPACER	
080	1490039-0000		1	NOZZLE	
090	2767235-0000		1	INSULATING PIPE	
100	1498146-0000		1	NOZZLE	
110	312105-0459		8	SCREW M6S ISO 4014 M8X40 A480	
110	312109-0457		8	SCREW M6S ISO 4017 M8X35 A480	
120	2517967-0000		2	EXTENSION	
130	2598967-0000		2	SPACER	
140	1549390-0000		3	NUT	
150	2767234-0000		2	INSULATING PIPE	
170	2767244-0000		2	INSULATING PIPE	
180	2767236-0000		1	INSULATING PIPE	
190	1317085-0000		2	NUT	
Common Parts					
200	359710-0001		2	WARNING SIGN ISO, HOT SURFACE	

Machine Type	Group Description	Used-In	Group Number	Page No

INDEXING UNIT

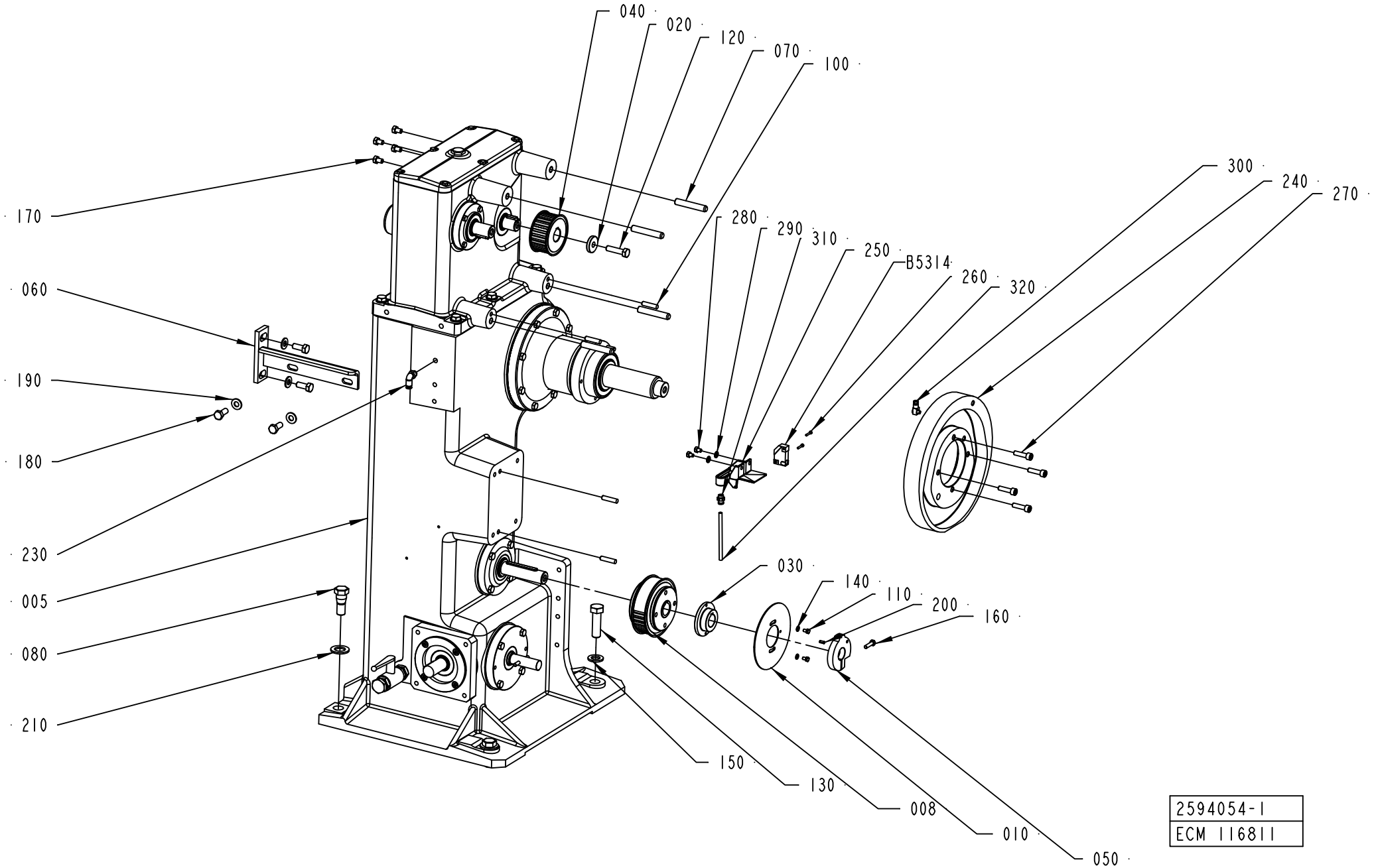

ECM: 369012 - 20090101
Group number: 2594054-0100
Assembly Drawing: 2594054-1_1_AA

Pos	Part No	UN	Qty	Description	Page No
A3/FLEX					
240	1548002-0000		1	CAM	
Common Parts					
005	2680390-0000		1	INDEXING DEVICE **5-213, 5-215, 5-217, 5-219, 5-221, 5-223**	
008	2552794-0000		1	PULLEY	
010	2604539-0000		1	PROTRACTOR	
020	1144681-0000		1	WASHER	
030	2634894-0000		1	FLANGE	
040	1347017-0000		1	PULLEY	
050	1144849-0000		1	SWITCH	
060	2544902-0000		1	BRACKET	
070	1348303-0000		3	STUD SCREW	
080	598549-0000		2	SCREW	
100	311103-0407		4	PARALLEL PIN ISO 2338 8M6X35 A1	
110	90287-0199		2	SCREW M6S ISO 4017 M5X6 A480	
120	312105-0499		1	SCREW M6S ISO 4014 M10X40 A480	
130	312105-0631		2	SCREW M6S ISO 4014 M16X55 A480	
140	315105-0146		2	WASHER BRB 5,3X10 RFR	
150	315105-0186		2	WASHER BRB 17X30 RFR	
160	312105-0370		1	SCREW M6S ISO 4017 M6X20 A480	
170	312105-0451		4	SCREW M6S ISO 4017 M8X20 A480	
180	312105-0493		4	SCREW M6S ISO 4017 M10X25 A480	
190	315105-0173		8	WASHER BRB 10,5X22 RFR	
200	311112-0251		1	SPRING PIN, ISO 8752 4X10-C	
210	315105-0192		2	WASHER BRB 21X36 RFR	
230	90458-2956		1	ELBOW PIPE JOINT, EXT.THREAD, D=6MM-G1/8	
250	1348072-0000		1	DRIP PLATE	
260	312125-0228		2	SCREW ISO 1207 M3X16 A4	
270	312115-0455		4	SCREW ISO4762 M8X30 A4 80	
280	312105-0362		2	SCREW M6S ISO 4017 M6X8 A480	
290	315105-0153		2	WASHER BRB 6,4X12 RFR	
300	90134-0058		1	CONNECTION	
310	342722-0202		1	PIPE COUPLING 1/8" D=6MM	
320	90266-0166	MM	1500	PIPE	
B5314	90044-0194		1	PROX.SW. IN5329/IN3002-BPKG(EX90044-104)	

Pos	Part No	UN	Qty	Description	Page No

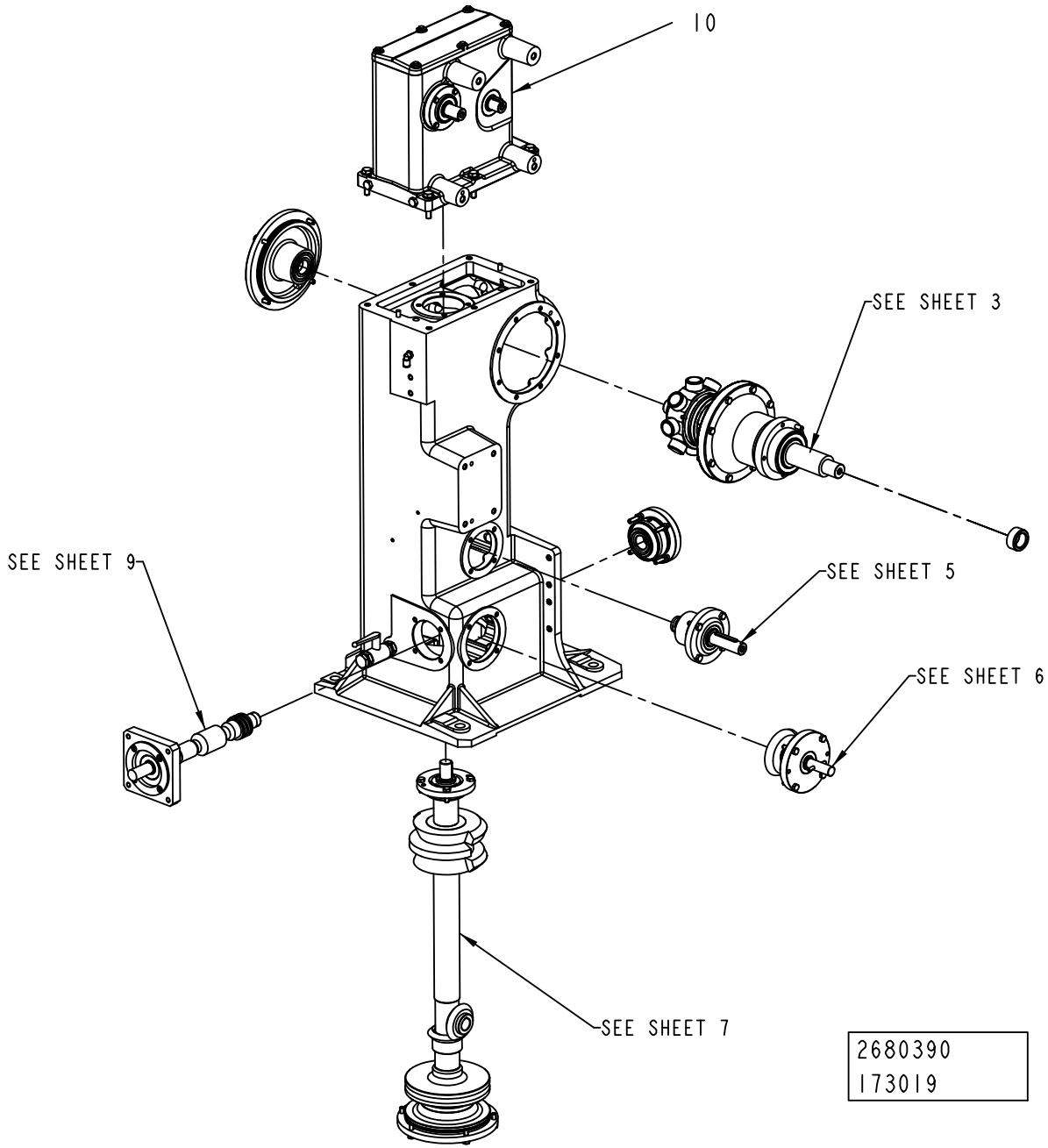
10
SEE SHEET 3
SEE SHEET 9
SEE SHEET 5
SEE SHEET 6
SEE SHEET 7
2680390
173019

ECM: 326361 - 20071106
Group number: 2680390-0000
Assembly Drawing: 2680390_2_AA

This list covers pages from 5-212 to 5-223

Pos	Part No	UN	Qty	Description	Page No
-					
010	2680391-0000		1	HEAD	**5-225, 5-227, 5-229**
020	315202-0225		1	O-RING 44,2X3 MM	
030	90459-4580		3	O-RING 165X4 MM	
040	90459-4588		1	RADIAL SEAL 60X85X8 MM DUST LIP	
050	2895146-0000		12	SPRING	
	Remark : Valid Only for Volume TPA 0750SQ QC and TPA 1000 SQ QC				
050	1498929-0000		12	SPRING	
060	312805-0107		1	NUT ROUND WITH SLOTS M35X1,5 FE	
070	312805-0110		1	NUT ROUND WITH SLOTS M50X1,5 FE	
080	2687110-0000		1	LOCK WASHER	
090	2687111-0000		1	LOCK WASHER	
100	90459-4578		3	O-RING 78X3 MM	
110	90459-4587		1	RADIAL SEAL 35X52X7 MM DUST LIP	
120	90459-4579		1	O-RING 94X3 MM	
130	90091-0148		1	RADIAL SEAL 25X47X7 MM DUST LIP	
140	2680401-0000		1	SPRING	
150	90459-4577		1	O-RING 64X3 MM	
160	90091-0306		1	RADIAL SEAL 30X47X7 MM DUST LIP	
170	90459-4585		1	RADIAL SEAL 25X52X7 MM DUST LIP	
180	315202-0302		1	O-RING 54,5X3 MM	

Pos	Part No	UN	Qty	Description	Page No

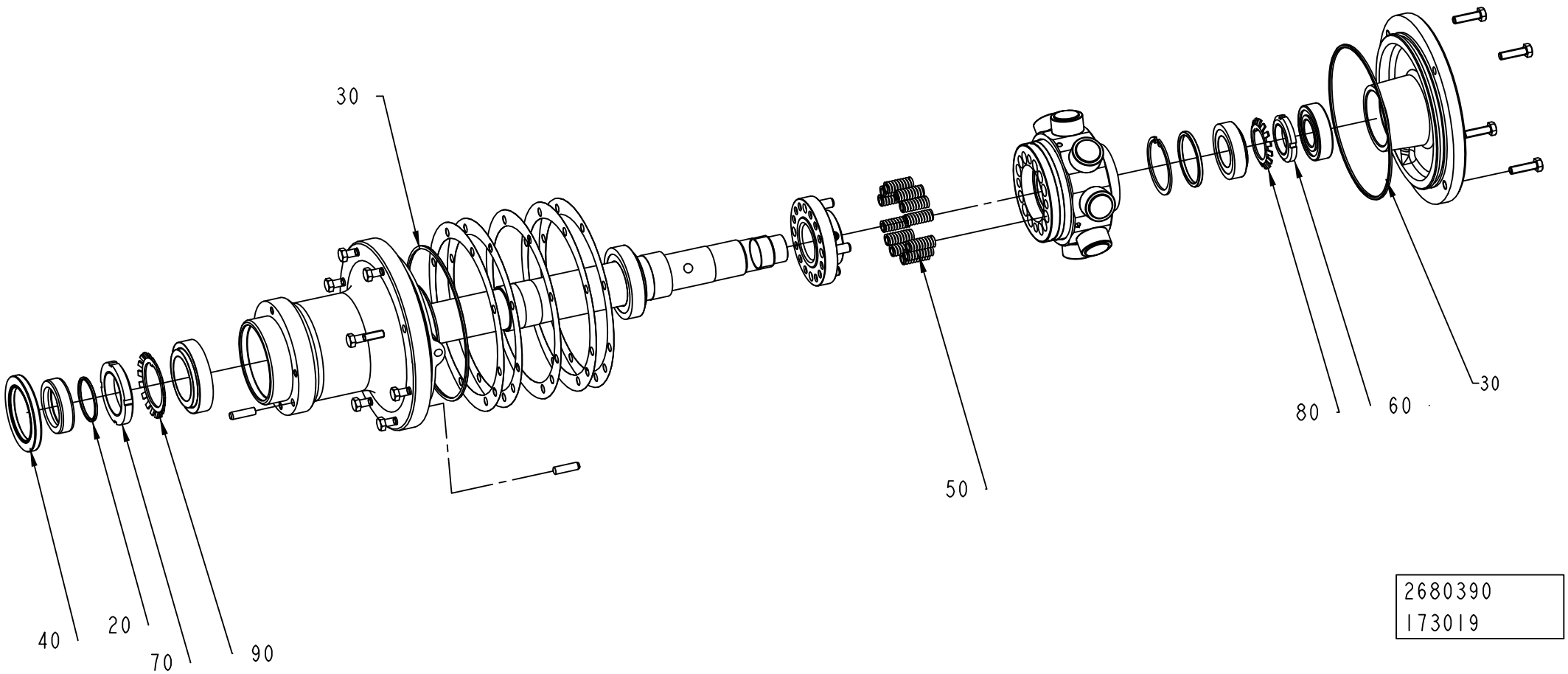

2680390
173019

ECM: 326361 - 20071106
Group number: 2680390-0000
Assembly Drawing: 2680390_3_AA

This list covers pages from 5-212 to 5-223

Pos	Part No	UN	Qty	Description	Page No
-					
010	2680391-0000		1	HEAD	**5-225, 5-227, 5-229**
020	315202-0225		1	O-RING 44,2X3 MM	
030	90459-4580		3	O-RING 165X4 MM	
040	90459-4588		1	RADIAL SEAL 60X85X8 MM DUST LIP	
050	2895146-0000		12	SPRING	
	Remark : Valid Only for Volume TPA 0750SQ QC and TPA 1000 SQ QC				
050	1498929-0000		12	SPRING	
060	312805-0107		1	NUT ROUND WITH SLOTS M35X1,5 FE	
070	312805-0110		1	NUT ROUND WITH SLOTS M50X1,5 FE	
080	2687110-0000		1	LOCK WASHER	
090	2687111-0000		1	LOCK WASHER	
100	90459-4578		3	O-RING 78X3 MM	
110	90459-4587		1	RADIAL SEAL 35X52X7 MM DUST LIP	
120	90459-4579		1	O-RING 94X3 MM	
130	90091-0148		1	RADIAL SEAL 25X47X7 MM DUST LIP	
140	2680401-0000		1	SPRING	
150	90459-4577		1	O-RING 64X3 MM	
160	90091-0306		1	RADIAL SEAL 30X47X7 MM DUST LIP	
170	90459-4585		1	RADIAL SEAL 25X52X7 MM DUST LIP	
180	315202-0302		1	O-RING 54,5X3 MM	

Pos	Part No	UN	Qty	Description	Page No

Machine Type | Group Description | Used-In | Group Number | Page No

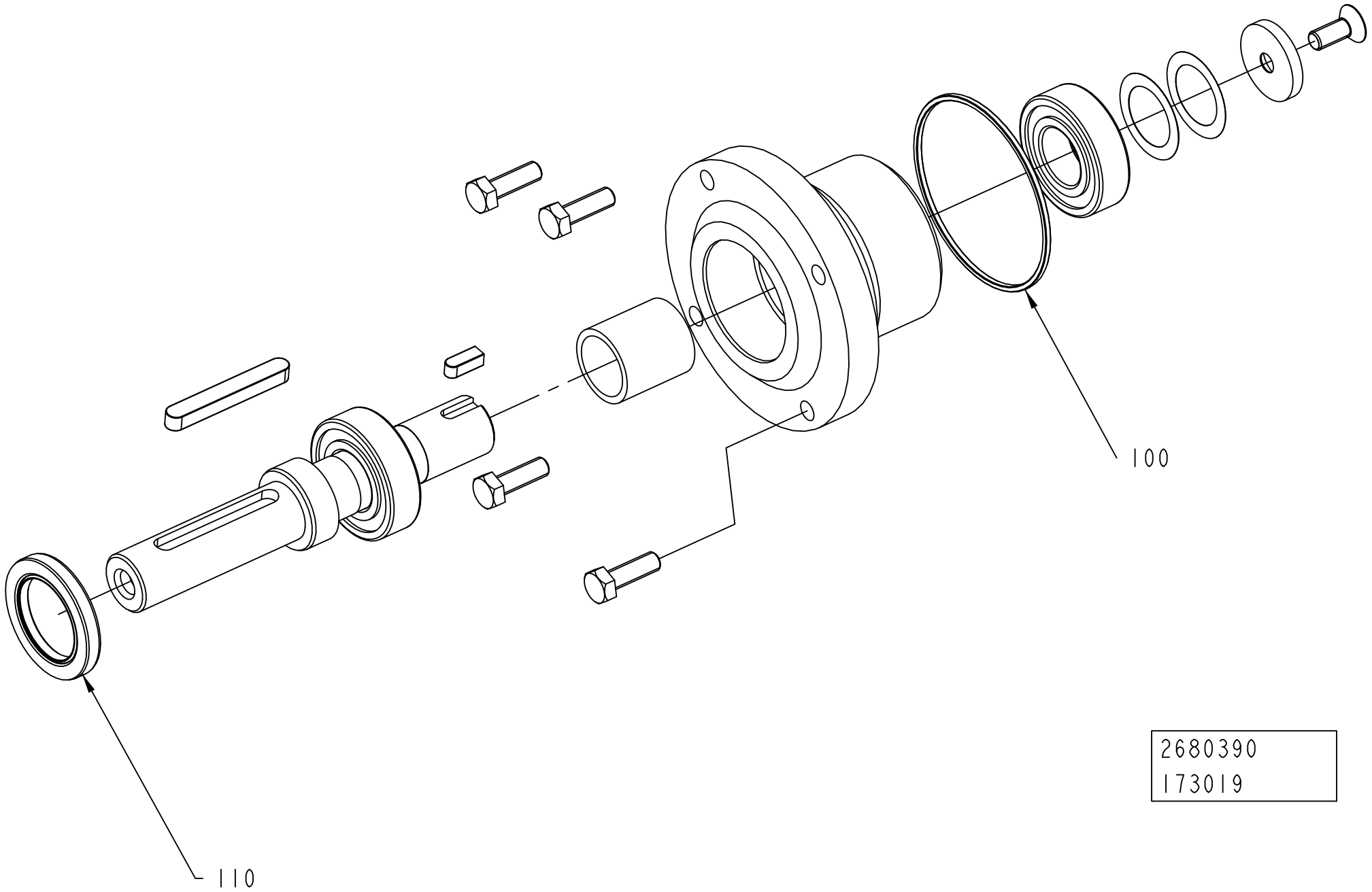
100
110
2680390
173019

ECM: 326361 - 20071106
Group number: 2680390-0000
Assembly Drawing: 2680390_5_AA

This list covers pages from 5-212 to 5-223

Pos	Part No	UN	Qty	Description	Page No
-					
010	2680391-0000		1	HEAD	**5-225, 5-227, 5-229**
020	315202-0225		1	O-RING 44,2X3 MM	
030	90459-4580		3	O-RING 165X4 MM	
040	90459-4588		1	RADIAL SEAL 60X85X8 MM DUST LIP	
050	2895146-0000		12	SPRING	
	Remark : Valid Only for Volume TPA 0750SQ QC and TPA 1000 SQ QC				
050	1498929-0000		12	SPRING	
060	312805-0107		1	NUT ROUND WITH SLOTS M35X1,5 FE	
070	312805-0110		1	NUT ROUND WITH SLOTS M50X1,5 FE	
080	2687110-0000		1	LOCK WASHER	
090	2687111-0000		1	LOCK WASHER	
100	90459-4578		3	O-RING 78X3 MM	
110	90459-4587		1	RADIAL SEAL 35X52X7 MM DUST LIP	
120	90459-4579		1	O-RING 94X3 MM	
130	90091-0148		1	RADIAL SEAL 25X47X7 MM DUST LIP	
140	2680401-0000		1	SPRING	
150	90459-4577		1	O-RING 64X3 MM	
160	90091-0306		1	RADIAL SEAL 30X47X7 MM DUST LIP	
170	90459-4585		1	RADIAL SEAL 25X52X7 MM DUST LIP	
180	315202-0302		1	O-RING 54,5X3 MM	

Pos	Part No	UN	Qty	Description	Page No

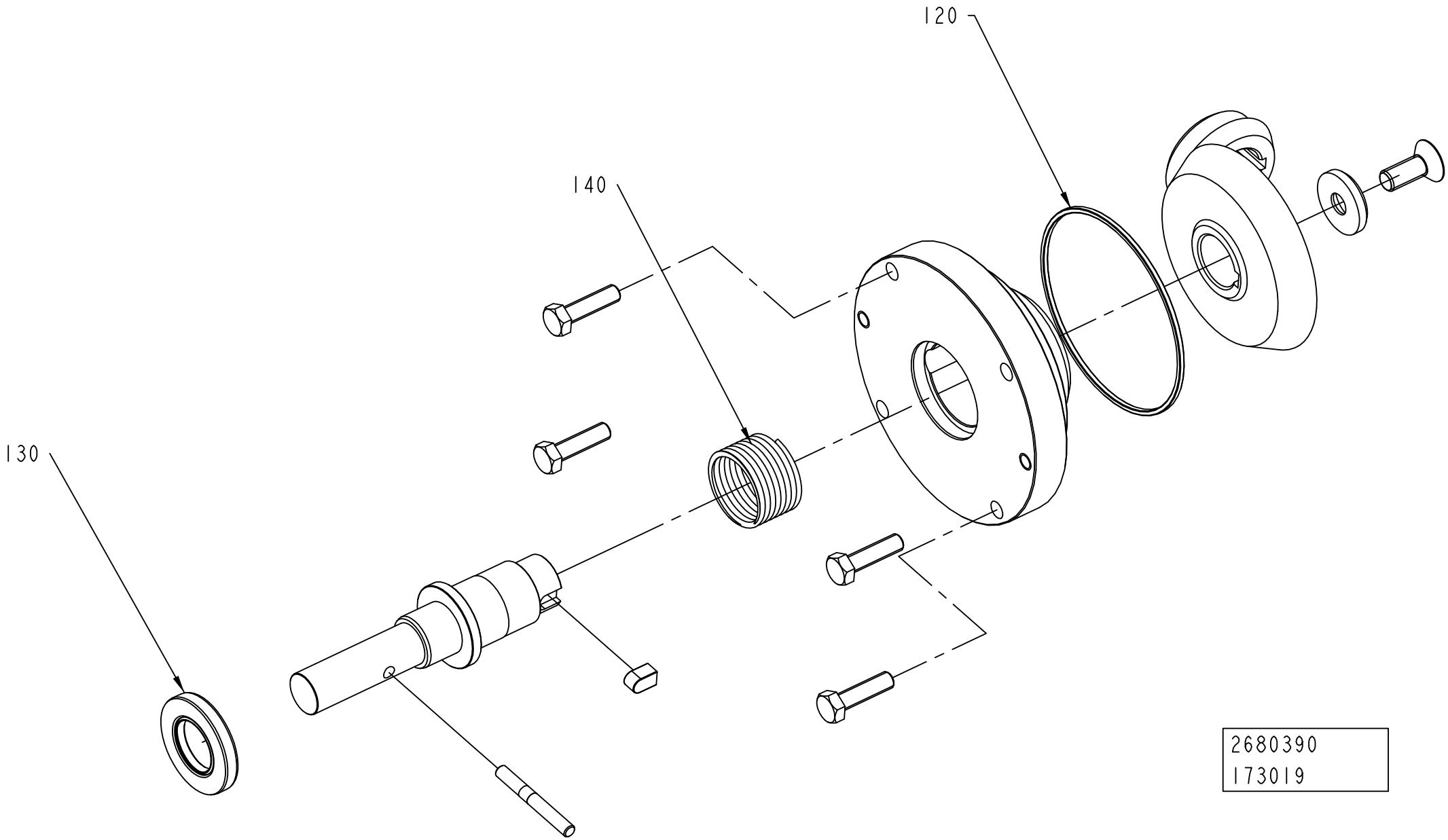
120
140
130
2680390
173019

ECM: 326361 - 20071106
Group number: 2680390-0000
Assembly Drawing: 2680390_6_AA

This list covers pages from 5-212 to 5-223

Pos	Part No	UN	Qty	Description	Page No
-					
010	2680391-0000		1	HEAD	**5-225, 5-227, 5-229**
020	315202-0225		1	O-RING 44,2X3 MM	
030	90459-4580		3	O-RING 165X4 MM	
040	90459-4588		1	RADIAL SEAL 60X85X8 MM DUST LIP	
050	2895146-0000		12	SPRING	
	Remark : Valid Only for Volume TPA 0750SQ QC and TPA 1000 SQ QC				
050	1498929-0000		12	SPRING	
060	312805-0107		1	NUT ROUND WITH SLOTS M35X1,5 FE	
070	312805-0110		1	NUT ROUND WITH SLOTS M50X1,5 FE	
080	2687110-0000		1	LOCK WASHER	
090	2687111-0000		1	LOCK WASHER	
100	90459-4578		3	O-RING 78X3 MM	
110	90459-4587		1	RADIAL SEAL 35X52X7 MM DUST LIP	
120	90459-4579		1	O-RING 94X3 MM	
130	90091-0148		1	RADIAL SEAL 25X47X7 MM DUST LIP	
140	2680401-0000		1	SPRING	
150	90459-4577		1	O-RING 64X3 MM	
160	90091-0306		1	RADIAL SEAL 30X47X7 MM DUST LIP	
170	90459-4585		1	RADIAL SEAL 25X52X7 MM DUST LIP	
180	315202-0302		1	O-RING 54,5X3 MM	

Pos	Part No	UN	Qty	Description	Page No

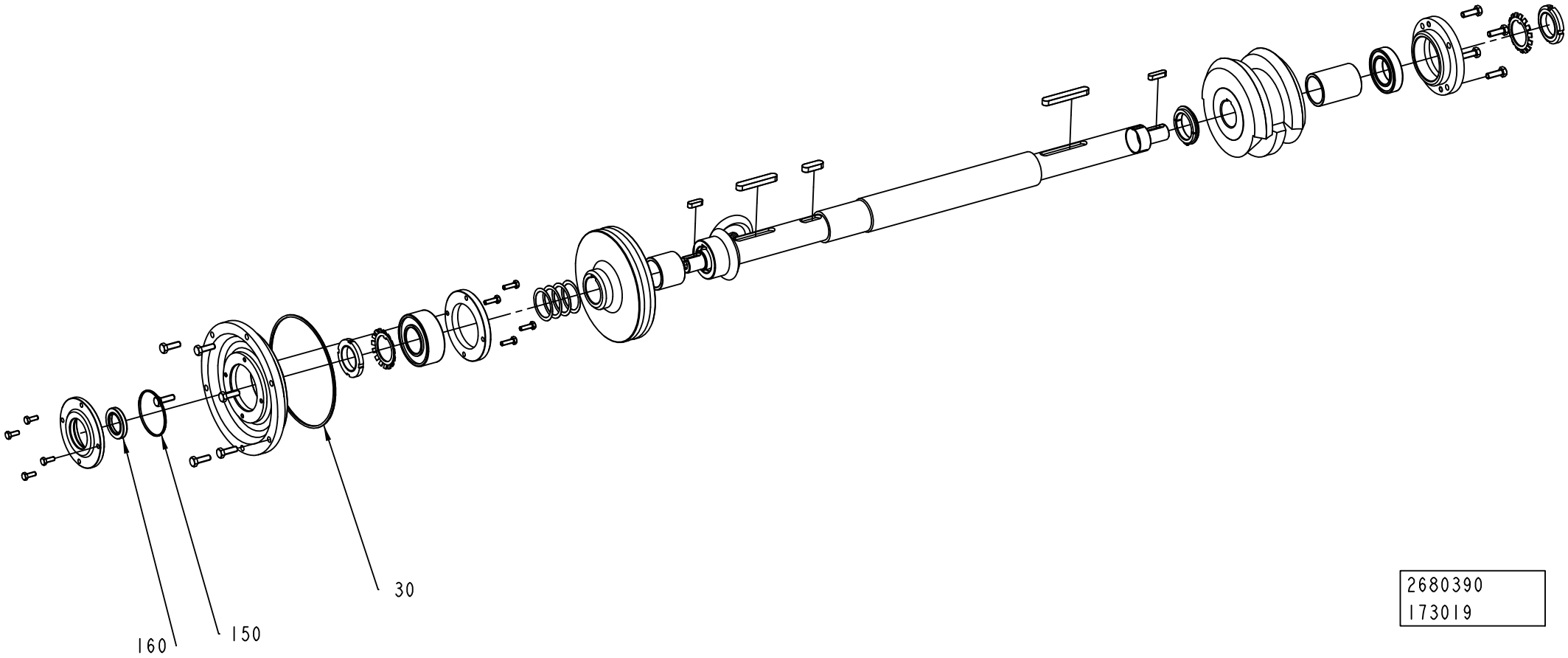

2680390
173019

ECM: 326361 - 20071106
Group number: 2680390-0000
Assembly Drawing: 2680390_7_AA

This list covers pages from 5-212 to 5-223

Pos	Part No	UN	Qty	Description	Page No
-					
010	2680391-0000		1	HEAD	**5-225, 5-227, 5-229**
020	315202-0225		1	O-RING 44,2X3 MM	
030	90459-4580		3	O-RING 165X4 MM	
040	90459-4588		1	RADIAL SEAL 60X85X8 MM DUST LIP	
050	2895146-0000		12	SPRING	
	Remark : Valid Only for Volume TPA 0750SQ QC and TPA 1000 SQ QC				
050	1498929-0000		12	SPRING	
060	312805-0107		1	NUT ROUND WITH SLOTS M35X1,5 FE	
070	312805-0110		1	NUT ROUND WITH SLOTS M50X1,5 FE	
080	2687110-0000		1	LOCK WASHER	
090	2687111-0000		1	LOCK WASHER	
100	90459-4578		3	O-RING 78X3 MM	
110	90459-4587		1	RADIAL SEAL 35X52X7 MM DUST LIP	
120	90459-4579		1	O-RING 94X3 MM	
130	90091-0148		1	RADIAL SEAL 25X47X7 MM DUST LIP	
140	2680401-0000		1	SPRING	
150	90459-4577		1	O-RING 64X3 MM	
160	90091-0306		1	RADIAL SEAL 30X47X7 MM DUST LIP	
170	90459-4585		1	RADIAL SEAL 25X52X7 MM DUST LIP	
180	315202-0302		1	O-RING 54,5X3 MM	

Pos	Part No	UN	Qty	Description	Page No

Machine Type | Group Description | Used-In | Group Number | Page No

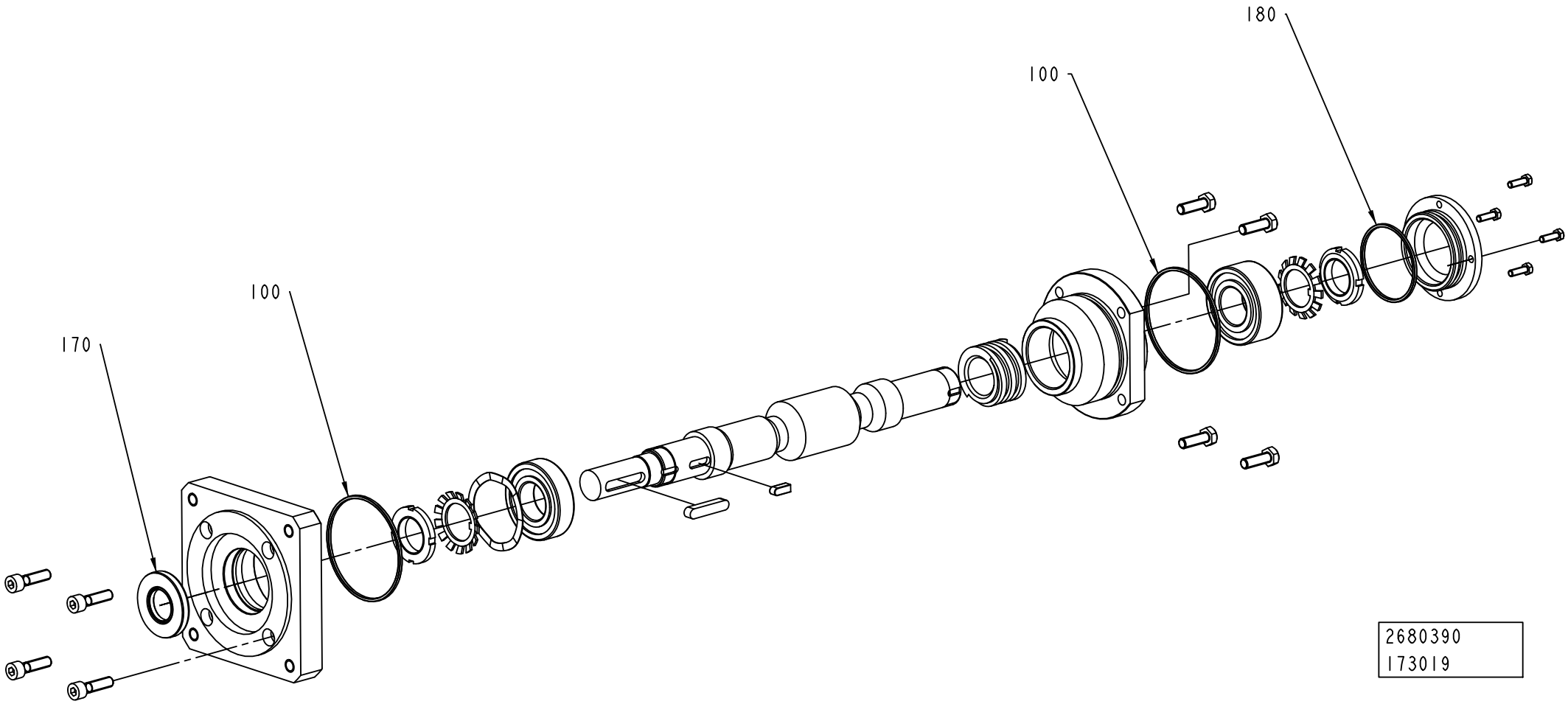
180
100
100
170
2680390
173019

ECM: 326361 - 20071106
Group number: 2680390-0000
Assembly Drawing: 2680390_9_AA

This list covers pages from 5-212 to 5-223

Pos	Part No	UN	Qty	Description	Page No
-					
010	2680391-0000		1	HEAD	**5-225, 5-227, 5-229**
020	315202-0225		1	O-RING 44,2X3 MM	
030	90459-4580		3	O-RING 165X4 MM	
040	90459-4588		1	RADIAL SEAL 60X85X8 MM DUST LIP	
050	2895146-0000		12	SPRING	
	Remark : Valid Only for Volume TPA 0750SQ QC and TPA 1000 SQ QC				
050	1498929-0000		12	SPRING	
060	312805-0107		1	NUT ROUND WITH SLOTS M35X1,5 FE	
070	312805-0110		1	NUT ROUND WITH SLOTS M50X1,5 FE	
080	2687110-0000		1	LOCK WASHER	
090	2687111-0000		1	LOCK WASHER	
100	90459-4578		3	O-RING 78X3 MM	
110	90459-4587		1	RADIAL SEAL 35X52X7 MM DUST LIP	
120	90459-4579		1	O-RING 94X3 MM	
130	90091-0148		1	RADIAL SEAL 25X47X7 MM DUST LIP	
140	2680401-0000		1	SPRING	
150	90459-4577		1	O-RING 64X3 MM	
160	90091-0306		1	RADIAL SEAL 30X47X7 MM DUST LIP	
170	90459-4585		1	RADIAL SEAL 25X52X7 MM DUST LIP	
180	315202-0302		1	O-RING 54,5X3 MM	

Pos	Part No	UN	Qty	Description	Page No

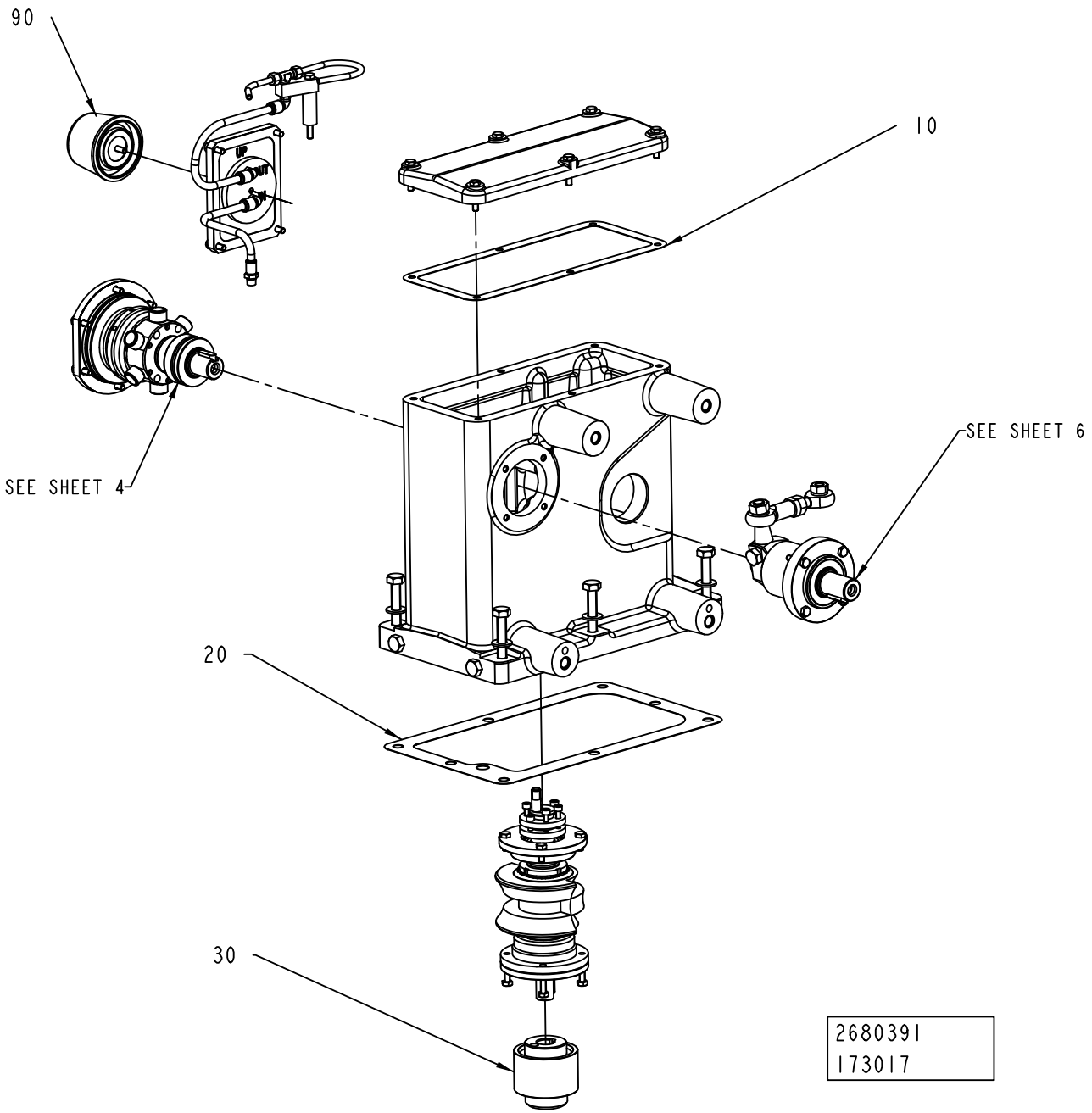
90
10
SEE SHEET 4
SEE SHEET 6
20
30
2680391
173017

ECM: 190933 - 20041104
Group number: 2680391-0000
Assembly Drawing: 2680391_3_AA

This list covers pages from 5-224 to 5-229

Pos	Part No	UN	Qty	Description	Page No
-					
010	1350042-0000		1	GASKET	
020	2680394-0000		1	GASKET	
030	2687109-0000		1	COUPLING	
040	90459-4576		1	O-RING 55X3 MM	
050	90459-4586		1	RADIAL SEAL 30X55X7 MM DUST LIP	
060	2680393-0000		1	LEVER	
070	90242-0281		1	O-RING 58X3 MM	
080	90091-0299		1	RADIAL SEAL 30X52X7 MM DUST LIP	
090	2680392-0000		1	FILTER	

Pos	Part No	UN	Qty	Description	Page No

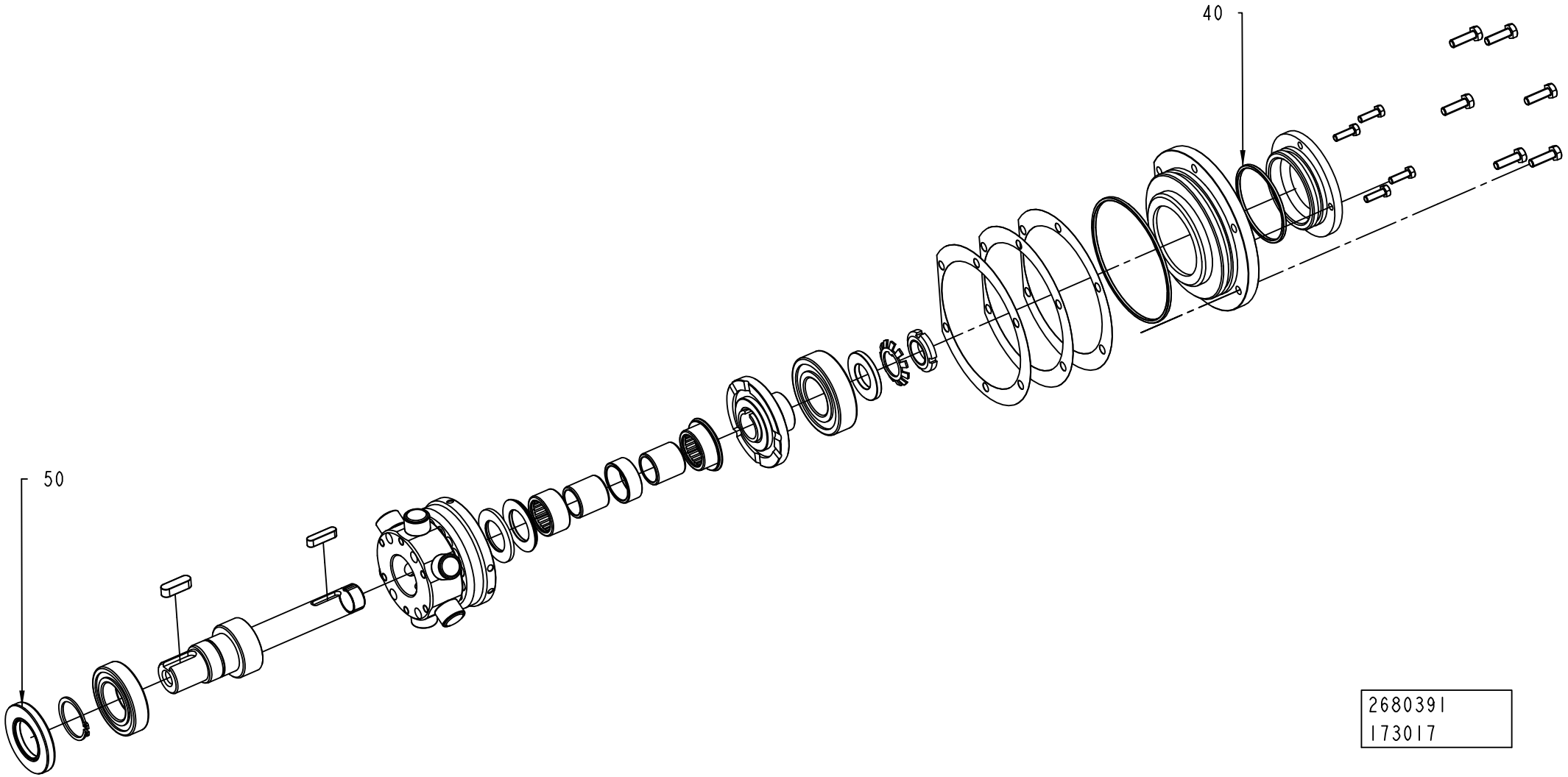
40
50
2680391
173017

ECM: 190933 - 20041104
Group number: 2680391-0000
Assembly Drawing: 2680391_4_AA

This list covers pages from 5-224 to 5-229

Pos	Part No	UN	Qty	Description	Page No
-					
010	1350042-0000		1	GASKET	
020	2680394-0000		1	GASKET	
030	2687109-0000		1	COUPLING	
040	90459-4576		1	O-RING 55X3 MM	
050	90459-4586		1	RADIAL SEAL 30X55X7 MM DUST LIP	
060	2680393-0000		1	LEVER	
070	90242-0281		1	O-RING 58X3 MM	
080	90091-0299		1	RADIAL SEAL 30X52X7 MM DUST LIP	
090	2680392-0000		1	FILTER	

Pos	Part No	UN	Qty	Description	Page No

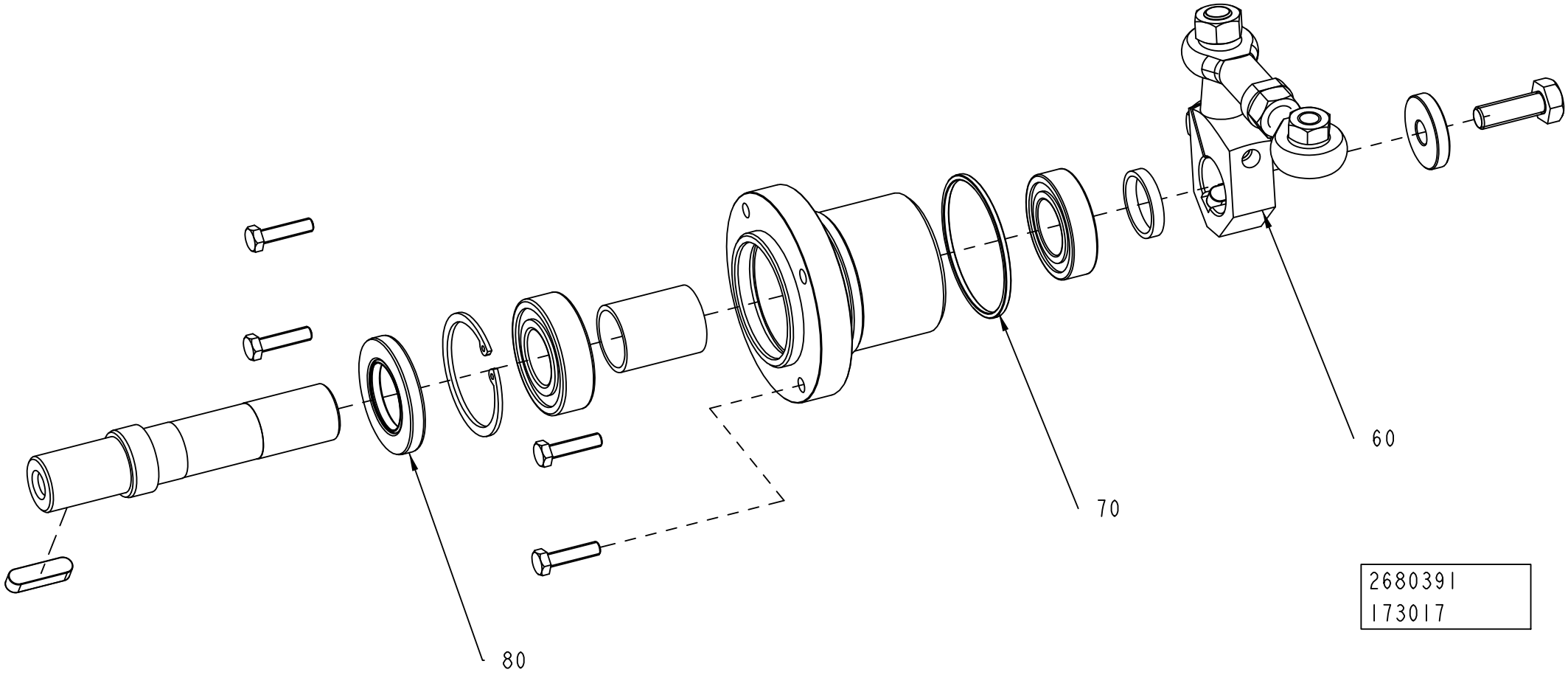
60
70
80
2680391
173017

ECM: 190933 - 20041104
Group number: 2680391-0000
Assembly Drawing: 2680391_6_AA

This list covers pages from 5-224 to 5-229

Pos	Part No	UN	Qty	Description	Page No
-					
010	1350042-0000		1	GASKET	
020	2680394-0000		1	GASKET	
030	2687109-0000		1	COUPLING	
040	90459-4576		1	O-RING 55X3 MM	
050	90459-4586		1	RADIAL SEAL 30X55X7 MM DUST LIP	
060	2680393-0000		1	LEVER	
070	90242-0281		1	O-RING 58X3 MM	
080	90091-0299		1	RADIAL SEAL 30X52X7 MM DUST LIP	
090	2680392-0000		1	FILTER	

Pos	Part No	UN	Qty	Description	Page No

PRESSURE DEVICE

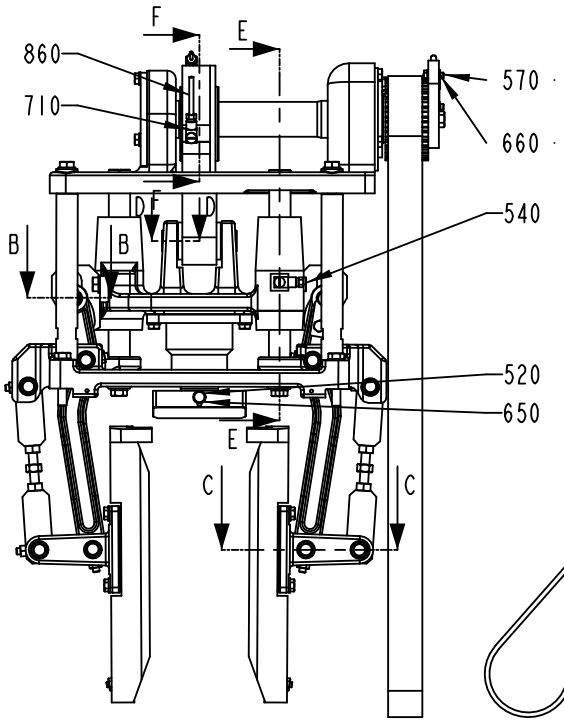

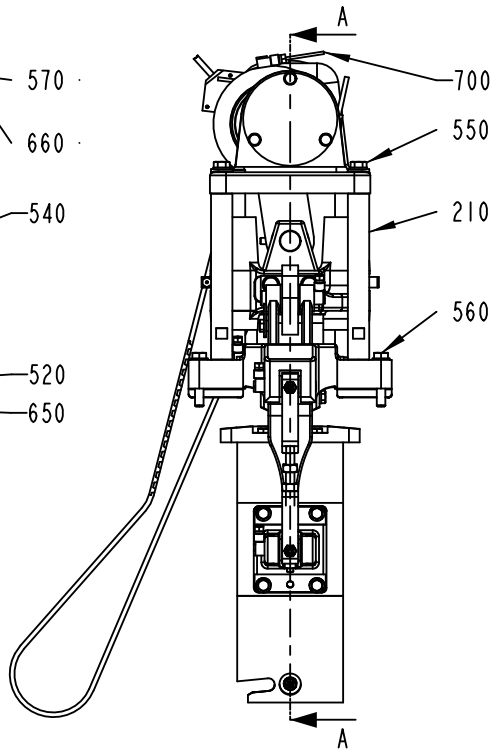

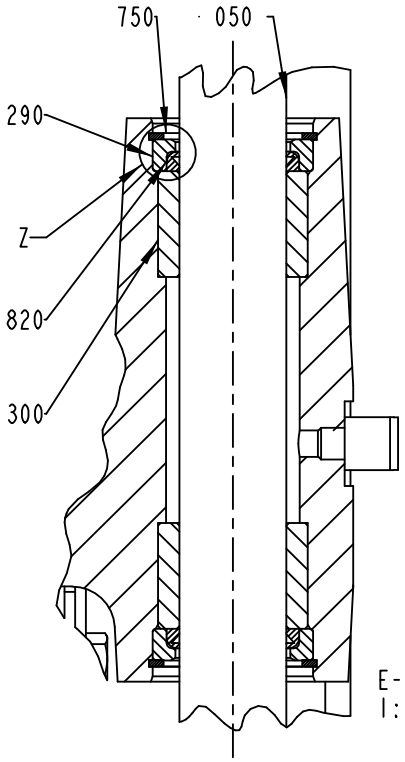

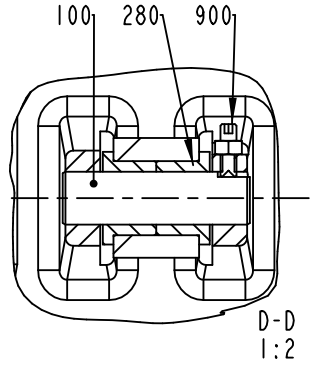

TPA 0500 SQ TPA 1000 SQ

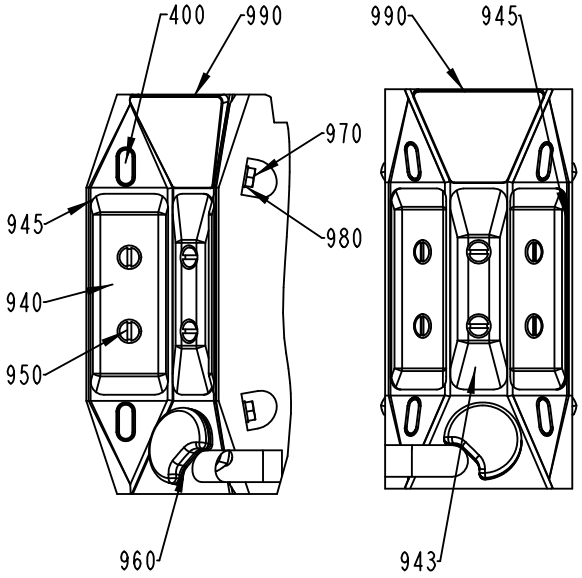

1:2

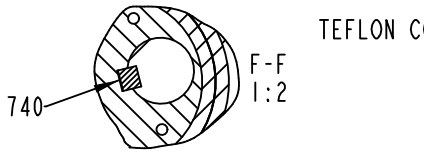

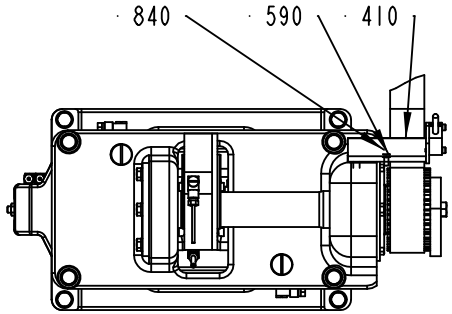

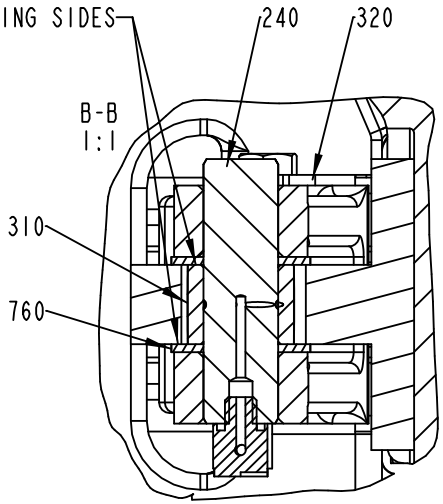

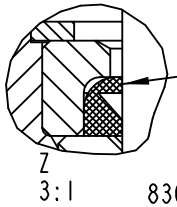

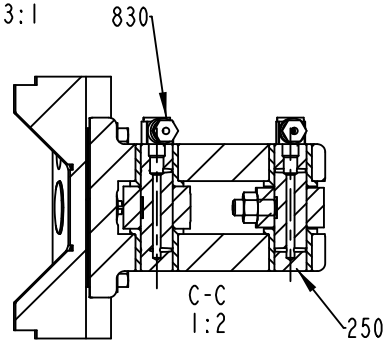

1144331-4
386221

ECM: 399376 - 20090612
Group number: 1144331-0300
Assembly Drawing: 1144331-4_1_AJ

This list covers pages from 5-230 to 5-241

Pos	Part No	UN	Qty	Description	Page No
TBA 0500S (See drawing on pages: 5-230, 5-232)					
010	1144482-0000		2	SUPPORT	
080	1144492-0000		1	SPRING	
260	1144511-0000		15	SHIM	
350	1349519-0000		1	ACTIVATOR	
360	321133-0375		1	BUSHING, 35X39X30 MM	
450	1144978-0000		2	CAM	
470	1499144-0000		1	PUSHER	
475	1499144-0000		1	PUSHER	
480	1499143-0000		1	PLATE	
530	312105-0370		8	SCREW M6S ISO 4017 M6X20 A480	
580	312115-0370		1	SCREW ISO4762 M6X20 A4 80	
630	312605-0316		9	HEXAGON NUT, M6M M6 A280	
650	315105-0153		4	WASHER BRB 6,4X12 RFR	
670	315105-0153		5	WASHER BRB 6,4X12 RFR	
TBA 0500SQ QC, TBA 1000SQ QC (See drawing on pages: 5-230, 5-232)					
010	1144482-0000		2	SUPPORT	
080	1144492-0000		1	SPRING	
260	1144511-0000		15	SHIM	
350	1349519-0000		1	ACTIVATOR	
360	321133-0375		1	BUSHING, 35X39X30 MM	
450	1144978-0000		2	CAM	
470	2529289-0000		1	PUSHER	
475	2529289-0000		1	PUSHER	
480	1549940-0000		1	PUSHER	
530	312105-0370		8	SCREW M6S ISO 4017 M6X20 A480	
580	312115-0370		1	SCREW ISO4762 M6X20 A4 80	
630	312605-0316		9	HEXAGON NUT, M6M M6 A280	
650	315105-0153		4	WASHER BRB 6,4X12 RFR	
670	315105-0153		5	WASHER BRB 6,4X12 RFR	
TBA 1000B NOQC (See drawing on pages: 5-230, 5-232)					
010	1144482-0000		2	SUPPORT	
080	1144492-0000		1	SPRING	
260	1144511-0000		15	SHIM	
350	1349519-0000		1	ACTIVATOR	
360	321133-0375		1	BUSHING, 35X39X30 MM	
450	1144978-0000		2	CAM	
470	1260701-0000		1	PUSHER	
475	1260701-0000		1	PUSHER	
480	1260702-0000		1	PLATE	
530	312105-0370		8	SCREW M6S ISO 4017 M6X20 A480	
580	312115-0370		1	SCREW ISO4762 M6X20 A4 80	
630	312605-0316		9	HEXAGON NUT, M6M M6 A280	
650	315105-0153		4	WASHER BRB 6,4X12 RFR	
670	315105-0153		5	WASHER BRB 6,4X12 RFR	
TBA 1000S (See drawing on pages: 5-230, 5-232)					
010	1144482-0000		2	SUPPORT	
080	1144492-0000		1	SPRING	
260	1144511-0000		15	SHIM	
350	1349519-0000		1	ACTIVATOR	
360	321133-0375		1	BUSHING, 35X39X30 MM	
450	1144978-0000		2	CAM	
470	1144928-0000		1	PUSHER	
475	1144928-0000		1	PUSHER	
480	1144932-0000		1	PLATE	
530	312105-0370		8	SCREW M6S ISO 4017 M6X20 A480	
580	312115-0370		1	SCREW ISO4762 M6X20 A4 80	
630	312605-0316		9	HEXAGON NUT, M6M M6 A280	
650	315105-0153		4	WASHER BRB 6,4X12 RFR	
670	315105-0153		5	WASHER BRB 6,4X12 RFR	
TBA 1000SQ NOQC (See drawing on pages: 5-230, 5-232)					
010	1144482-0000		2	SUPPORT	
080	1144492-0000		1	SPRING	
260	1144511-0000		15	SHIM	
350	1349519-0000		1	ACTIVATOR	
360	321133-0375		1	BUSHING, 35X39X30 MM	
450	1144978-0000		2	CAM	
470	1490032-0000		1	PUSHER	
475	1490032-0000		1	PUSHER	
480	1549940-0000		1	PUSHER	
530	312105-0370		8	SCREW M6S ISO 4017 M6X20 A480	
580	312115-0370		1	SCREW ISO4762 M6X20 A4 80	
630	312605-0316		9	HEXAGON NUT, M6M M6 A280	
650	315105-0153		4	WASHER BRB 6,4X12 RFR	
670	315105-0153		5	WASHER BRB 6,4X12 RFR	
TBA 1400B (See drawing on pages: 5-230, 5-232)					
010	1144482-0000		2	SUPPORT	
080	2662142-0000		1	SPRING	
260	1144511-0000		15	SHIM	
350	1349519-0000		1	ACTIVATOR	
360	321133-0375		1	BUSHING, 35X39X30 MM	
450	1144978-0000		2	CAM	
470	2771574-0000		1	PUSHER	
475	2771574-0000		1	PUSHER	

Machine Type | Group Description | Used-In | Group Number | Page No

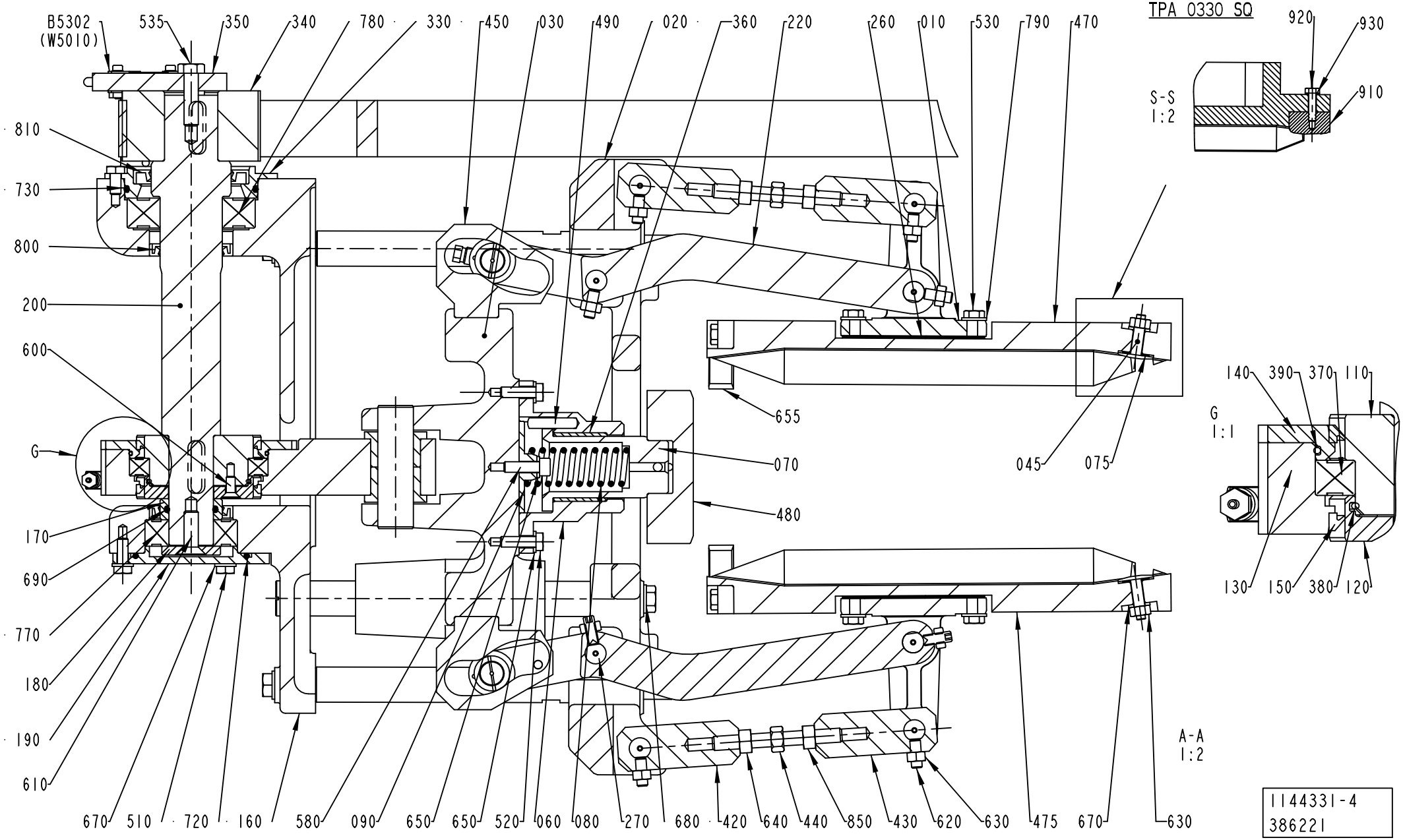
B5302
(W5010)
535
350
340
780
330
450
030
490
020
360
220
260
010
530
790
470
TPA 0330 SQ
920
930
910
S-S
1:2
810
730
800
200
600
G
170
690
770
180
190
610
655
070
480
045
075
140
390
370
110
G
1:1
130
150
380
120
A-A
1:2
670
510
720
160
580
090
650
650
520
060
080
270
680
420
640
440
850
430
620
630
475
670
630
1144331-4
386221

Pos	Part No	UN	Qty	Description	Page No
TBA 1400B (Cont'd) (See drawing on pages: 5-230, 5-232)					
480	2660841-0000		1	PUSHER	
530	312105-0370		8	SCREW M6S ISO 4017 M6X20 A480	
580	312115-0370		5	SCREW ISO4762 M6X20 A4 80	
630	312605-0316		9	HEXAGON NUT, M6M M6 A280	
650	315105-0153		4	WASHER BRB 6,4X12 RFR	
655	2594902-0000		2	CATCH	
670	315105-0153		5	WASHER BRB 6,4X12 RFR	
TBA 1500S (See drawing on pages: 5-230, 5-232)					
010	1144482-0000		2	SUPPORT	
080	1144492-0000		1	SPRING	
260	1144511-0000		15	SHIM	
350	1349519-0000		1	ACTIVATOR	
360	321133-0375		1	BUSHING, 35X39X30 MM	
450	1144978-0000		2	CAM	
470	1317654-0000		1	PUSHER	
475	1317654-0000		1	PUSHER	
480	1317655-0000		1	PLATE	
530	312105-0370		12	SCREW M6S ISO 4017 M6X20 A480	
580	312115-0370		1	SCREW ISO4762 M6X20 A4 80	
630	312605-0316		9	HEXAGON NUT, M6M M6 A280	
650	315105-0153		4	WASHER BRB 6,4X12 RFR	
655	1317787-0000		2	CATCH	
670	315105-0153		5	WASHER BRB 6,4X12 RFR	
TBA 1890S QC, TBA 2000S QC (See drawing on pages: 5-230, 5-232)					
010	1144482-0000		2	SUPPORT	
080	2662142-0000		1	SPRING	
260	1144511-0000		15	SHIM	
350	1349519-0000		1	ACTIVATOR	
360	321133-0375		1	BUSHING, 35X39X30 MM	
450	1144978-0000		2	CAM	
470	2661429-0000		1	PUSHER	
475	2661429-0000		1	PUSHER	
480	2660841-0000		1	PUSHER	
530	312105-0370		8	SCREW M6S ISO 4017 M6X20 A480	
580	312115-0370		5	SCREW ISO4762 M6X20 A4 80	
630	312605-0316		9	HEXAGON NUT, M6M M6 A280	
650	315105-0153		4	WASHER BRB 6,4X12 RFR	
655	2594902-0000		2	CATCH	
670	315105-0153		5	WASHER BRB 6,4X12 RFR	
TPA 0200SQ QC, TPA 0250SQ QC (See drawing on pages: 5-234, 5-236)					
010	2647101-0000		2	SUPPORT	
080	1144492-0000		1	SPRING	
1000	2647099-0000		2	GUIDE	
1020	90459-3940		2	LEVER, GN 612-6-M16X1.5-A-NI	
260	2658249-0000		15	SHIM	
350	1349519-0000		1	ACTIVATOR	
360	321133-0375		1	BUSHING, 35X39X30 MM	
450	1144486-0000		2	CAM	
470	2705814-0100		1	PUSHER	**5-243, 5-245**
480	1549849-0000		1	PLATE	
530	312105-0368		8	SCREW M6S ISO 4017 M6X16 A480	
580	312115-0370		1	SCREW ISO4762 M6X20 A4 80	
630	312605-0316		9	HEXAGON NUT, M6M M6 A280	
650	315105-0153		4	WASHER BRB 6,4X12 RFR	
670	315105-0153		5	WASHER BRB 6,4X12 RFR	
TPA 0250SQ NOQC (See drawing on pages: 5-230, 5-232)					
010	1144482-0000		2	SUPPORT	
080	1144492-0000		1	SPRING	
260	1144511-0000		15	SHIM	
350	1349519-0000		1	ACTIVATOR	
360	321133-0375		1	BUSHING, 35X39X30 MM	
450	1144486-0000		2	CAM	
470	1549847-0000		1	PUSHER	
475	1549848-0000		1	PUSHER	
480	1549849-0000		1	PLATE	
530	312105-0370		8	SCREW M6S ISO 4017 M6X20 A480	
580	312115-0370		1	SCREW ISO4762 M6X20 A4 80	
630	312605-0316		9	HEXAGON NUT, M6M M6 A280	
650	315105-0153		4	WASHER BRB 6,4X12 RFR	
670	315105-0153		5	WASHER BRB 6,4X12 RFR	
TPA 0330SQ (See drawing on pages: 5-230, 5-232)					
010	1144482-0000		2	SUPPORT	
080	1260895-0000		1	SPRING	
260	1144511-0000		15	SHIM	
350	1349519-0000		1	ACTIVATOR	
360	321133-0375		1	BUSHING, 35X39X30 MM	
450	1144486-0000		2	CAM	
470	1532289-0000		1	PUSHER	
475	1532290-0000		1	PUSHER	
480	1532291-0000		1	PLATE	
530	312105-0370		8	SCREW M6S ISO 4017 M6X20 A480	
580	312115-0370		1	SCREW ISO4762 M6X20 A4 80	
630	312605-0316		9	HEXAGON NUT, M6M M6 A280	

PRESSURE DEVICE

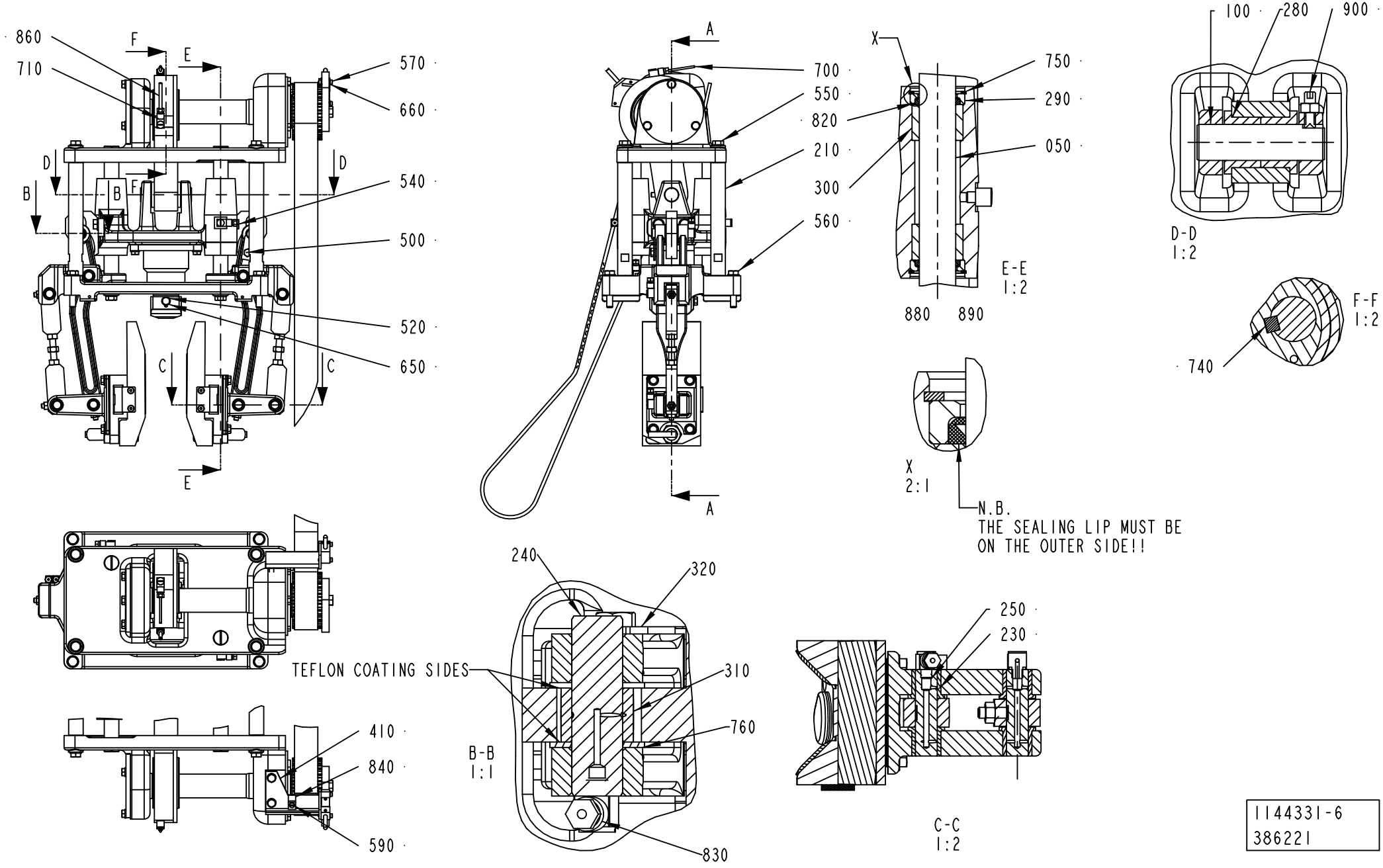

1144331-6
386221

Pos	Part No	UN	Qty	Description	Page No
TPA 0330SQ (Cont'd) (See drawing on pages: 5-230, 5-232)					
650	315105-0153		4	WASHER BRB 6,4X12 RFR	
670	315105-0153		5	WASHER BRB 6,4X12 RFR	
910	1558821-0000		2	VOLUME BULGE	
920	312105-0293		2	SCREW M6S ISO 4017 M4X16 A470	
930	315105-0136		2	WASHER BRB 4,3X8 RFR	
TPA 0500SQ (See drawing on pages: 5-230, 5-232)					
010	1144482-0000		2	SUPPORT	
045	2541877-0000		2	NAIL	
080	1144492-0000		1	SPRING	
260	1144511-0000		15	SHIM	
350	1349519-0000		1	ACTIVATOR	
360	321133-0375		1	BUSHING, 35X39X30 MM	
400	2635167-0000		8	VOLUME BULGE	
450	1144486-0000		2	CAM	
470	1558178-0000		1	PUSHER	
475	1558047-0000		1	PUSHER	
480	1558184-0000		1	PLATE	
530	312105-0370		8	SCREW M6S ISO 4017 M6X20 A480	
580	312115-0370		1	SCREW ISO4762 M6X20 A4 80	
630	312605-0316		11	HEXAGON NUT, M6M M6 A280	
650	315105-0153		5	WASHER BRB 6,4X12 RFR	
670	315105-0153		7	WASHER BRB 6,4X12 RFR	
940	2602613-0000		4	VOLUME BULGE	
943	2559008-0000		2	VOLUME BULGE	
945	2611875-0000		4	SHIM	
950	312155-0287		12	SCREW DIN 7991 MF6S M4X8 A4 70	
960	2541878-0000		6	WASHER	
970	312105-0287		10	SCREW M6S ISO 4017 M4X8 A470	
980	315105-0136		10	WASHER BRB 4,3X8 RFR	
990	2640075-0000		2	VOLUME BULGE	
TPA 1000SQ NOQC (See drawing on pages: 5-230, 5-232)					
010	1144482-0000		2	SUPPORT	
045	2541877-0000		2	NAIL	
080	1143530-0000		1	SPRING	
260	1144511-0000		15	SHIM	
350	1349519-0000		1	ACTIVATOR	
360	321133-0375		1	BUSHING, 35X39X30 MM	
450	1144486-0000		2	CAM	
470	2698264-0000		1	FLAP	
475	2698265-0000		1	FLAP	
480	1523826-0000		1	PUSHER	
530	312105-0370		8	SCREW M6S ISO 4017 M6X20 A480	
580	312115-0370		1	SCREW ISO4762 M6X20 A4 80	
630	312605-0316		11	HEXAGON NUT, M6M M6 A280	
650	315105-0153		4	WASHER BRB 6,4X12 RFR	
670	315105-0153		7	WASHER BRB 6,4X12 RFR	
940	2698262-0000		4	VOLUME BULGE	
943	2698261-0000		2	VOLUME BULGE	
945	2698260-0000		2	VOLUME SHIM	
950	312155-0287		12	SCREW DIN 7991 MF6S M4X8 A4 70	
960	2541878-0000		6	WASHER	
970	312105-0287		2	SCREW M6S ISO 4017 M4X8 A470	
980	315105-0136		2	WASHER BRB 4,3X8 RFR	
990	2698263-0000		2	VOLUME BULGE	
TPA 1000SQ QC, TPA 0750SQ QC (See drawing on pages: 5-234, 5-236)					
010	2647101-0000		2	SUPPORT	
080	1143530-0000		1	SPRING	
1000	2647099-0000		2	GUIDE	
1020	90459-3940		2	LEVER, GN 612-6-M16X1.5-A-NI	
260	2658249-0000		15	SHIM	
350	1349519-0000		1	ACTIVATOR	
360	321133-0375		1	BUSHING, 35X39X30 MM	
450	1144486-0000		2	CAM	
470	2705814-0100		1	PUSHER	**5-243, 5-245**
480	2698300-0000		1	PLATE	
530	312105-0368		8	SCREW M6S ISO 4017 M6X16 A480	
580	312115-0370		1	SCREW ISO4762 M6X20 A4 80	
630	312605-0316		9	HEXAGON NUT, M6M M6 A280	
650	315105-0153		4	WASHER BRB 6,4X12 RFR	
670	315105-0153		5	WASHER BRB 6,4X12 RFR	
TBA 0200B NOQC (See drawing on pages: 5-230, 5-232)					
010	1144482-0000		2	SUPPORT	
080	1260895-0000		1	SPRING	
260	1144511-0000		15	SHIM	
350	1349519-0000		1	ACTIVATOR	
360	321133-0375		1	BUSHING, 35X39X30 MM	
450	1144978-0000		2	CAM	
470	1334999-0000		1	PUSHER	
475	1334999-0000		1	PUSHER	
480	1350809-0000		1	BLOCK	
530	312105-0370		8	SCREW M6S ISO 4017 M6X20 A480	
580	312115-0370		1	SCREW ISO4762 M6X20 A4 80	
630	312605-0316		9	HEXAGON NUT, M6M M6 A280	

Machine Type | Group Description | Used-In | Group Number | Page No

PRESSURE DEVICE

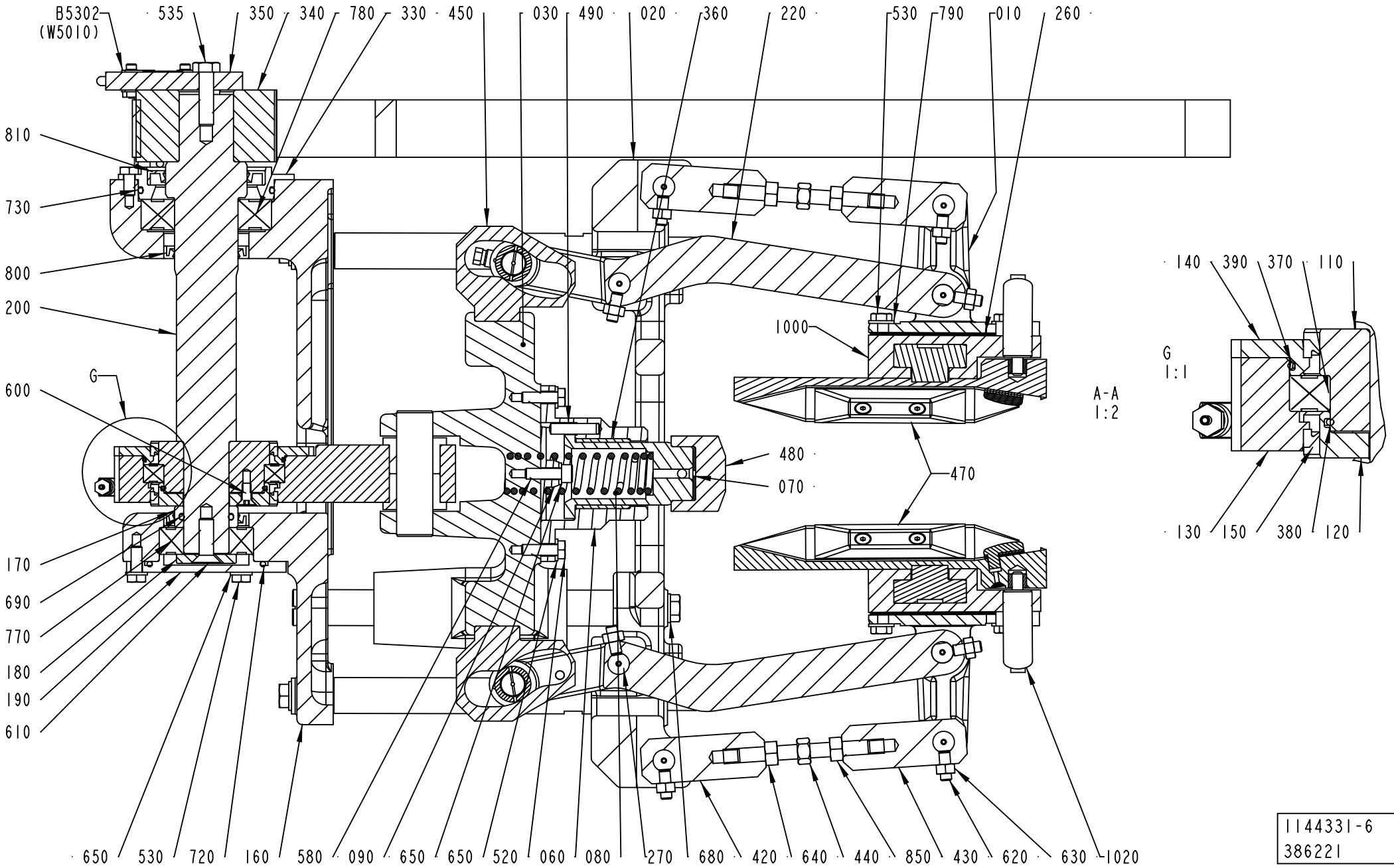

1144331-6
386221

ECM: 399376 - 20090612
Group number: 1144331-0300
Assembly Drawing: 1144331-6_2_AC

This list covers pages from 5-230 to 5-241

Pos	Part No	UN	Qty	Description	Page No
TBA 0200B NOQC (Cont'd) (See drawing on pages: 5-230, 5-232)					
650	315105-0153		4	WASHER BRB 6,4X12 RFR	
670	315105-0153		5	WASHER BRB 6,4X12 RFR	
TBA 0200B QC, TBA 0330S QC, TBA 0250B QC (See drawing on pages: 5-230, 5-232)					
010	1144482-0000		2	SUPPORT	
080	1144492-0000		1	SPRING	
260	1144511-0000		15	SHIM	
350	1349519-0000		1	ACTIVATOR	
360	321133-0375		1	BUSHING, 35X39X30 MM	
450	1144978-0000		2	CAM	
470	2605125-0000		1	PUSHER	
475	2605125-0000		1	PUSHER	
480	2651145-0000		1	BLOCK	
530	312105-0370		8	SCREW M6S ISO 4017 M6X20 A480	
580	312115-0370		1	SCREW ISO4762 M6X20 A4 80	
630	312605-0316		9	HEXAGON NUT, M6M M6 A280	
650	315105-0153		4	WASHER BRB 6,4X12 RFR	
670	315105-0153		5	WASHER BRB 6,4X12 RFR	
TBA 0200M, TBA 0250S (See drawing on pages: 5-230, 5-232)					
010	1144482-0000		2	SUPPORT	
080	1144492-0000		1	SPRING	
260	1144511-0000		15	SHIM	
350	1349519-0000		1	ACTIVATOR	
360	321133-0375		1	BUSHING, 35X39X30 MM	
450	1144978-0000		2	CAM	
470	2686876-0000		1	PUSHER	
475	2686876-0000		1	PUSHER	
480	2522197-0000		1	PLATE	
530	312105-0370		8	SCREW M6S ISO 4017 M6X20 A480	
630	312605-0316		9	HEXAGON NUT, M6M M6 A280	
650	315105-0153		4	WASHER BRB 6,4X12 RFR	
670	315105-0153		5	WASHER BRB 6,4X12 RFR	
TBA 0200S (See drawing on pages: 5-230, 5-232)					
010	1144482-0000		2	SUPPORT	
080	1260895-0000		1	SPRING	
260	1144511-0000		15	SHIM	
350	1349519-0000		1	ACTIVATOR	
360	321133-0375		1	BUSHING, 35X39X30 MM	
450	1144978-0000		2	CAM	
470	1260889-0000		1	PUSHER	
475	1260889-0000		1	PUSHER	
480	1260888-0000		1	BLOCK	
530	312105-0370		8	SCREW M6S ISO 4017 M6X20 A480	
580	312115-0370		1	SCREW ISO4762 M6X20 A4 80	
630	312605-0316		9	HEXAGON NUT, M6M M6 A280	
650	315105-0153		4	WASHER BRB 6,4X12 RFR	
670	315105-0153		5	WASHER BRB 6,4X12 RFR	
TBA 0200SQ QC, TBA 0250SQ QC (See drawing on pages: 5-230, 5-232)					
010	1144482-0000		2	SUPPORT	
080	1144492-0000		1	SPRING	
260	1144511-0000		15	SHIM	
350	1349519-0000		1	ACTIVATOR	
360	321133-0375		1	BUSHING, 35X39X30 MM	
450	1144978-0000		2	CAM	
470	2757847-0000		1	PUSHER	
475	2757847-0000		1	PUSHER	
480	2668240-0000		1	BLOCK	
530	312105-0370		8	SCREW M6S ISO 4017 M6X20 A480	
580	312115-0370		1	SCREW ISO4762 M6X20 A4 80	
630	312605-0316		9	HEXAGON NUT, M6M M6 A280	
650	315105-0153		4	WASHER BRB 6,4X12 RFR	
670	315105-0153		5	WASHER BRB 6,4X12 RFR	
TBA 0250B NOQC (See drawing on pages: 5-230, 5-232)					
010	1144482-0000		2	SUPPORT	
080	1260895-0000		1	SPRING	
260	1144511-0000		15	SHIM	
350	1349519-0000		1	ACTIVATOR	
360	321133-0375		1	BUSHING, 35X39X30 MM	
450	1144978-0000		2	CAM	
470	1350810-0000		1	PUSHER	
475	1350810-0000		1	PUSHER	
480	1350809-0000		1	BLOCK	
530	312105-0370		8	SCREW M6S ISO 4017 M6X20 A480	
580	312115-0370		1	SCREW ISO4762 M6X20 A4 80	
630	312605-0316		9	HEXAGON NUT, M6M M6 A280	
650	315105-0153		4	WASHER BRB 6,4X12 RFR	
670	315105-0153		5	WASHER BRB 6,4X12 RFR	
TBA 0500B NOQC (See drawing on pages: 5-230, 5-232)					
010	1144482-0000		2	SUPPORT	
080	1144492-0000		1	SPRING	
260	1144511-0000		15	SHIM	
350	1349519-0000		1	ACTIVATOR	
360	321133-0375		1	BUSHING, 35X39X30 MM	
450	1144978-0000		2	CAM	

Machine Type | Group Description | Used-In | Group Number | Page No

See previous drawings pages: 5-230, 5-232, 5-234, 5-236.

ECM: 399376 - 20090612
Group number: 1144331-0300
Assembly Drawing: 1144331-6_2_AC

This list covers pages from 5-230 to 5-241

Pos	Part No	UN	Qty	Description	Page No
TBA 0500B NOQC (Cont'd) (See drawing on pages: 5-230, 5-232)					
470	1539872-0000		1	PUSHER	
475	1539872-0000		1	PUSHER	
480	1260702-0000		1	PLATE	
530	312105-0370		8	SCREW M6S ISO 4017 M6X20 A480	
580	312115-0370		1	SCREW ISO4762 M6X20 A4 80	
630	312605-0316		9	HEXAGON NUT, M6M M6 A280	
650	315105-0153		4	WASHER BRB 6,4X12 RFR	
670	315105-0153		5	WASHER BRB 6,4X12 RFR	
TBA 0500B QC, TBA 1000B QC (See drawing on pages: 5-230, 5-232)					
010	1144482-0000		2	SUPPORT	
080	1144492-0000		1	SPRING	
260	1144511-0000		15	SHIM	
350	1349519-0000		1	ACTIVATOR	
360	321133-0375		1	BUSHING, 35X39X30 MM	
450	1144978-0000		2	CAM	
470	2524512-0000		1	PUSHER	
475	2524512-0000		1	PUSHER	
480	1260702-0000		1	PLATE	
530	312105-0370		8	SCREW M6S ISO 4017 M6X20 A480	
580	312115-0370		1	SCREW ISO4762 M6X20 A4 80	
630	312605-0316		9	HEXAGON NUT, M6M M6 A280	
650	315105-0153		4	WASHER BRB 6,4X12 RFR	
670	315105-0153		5	WASHER BRB 6,4X12 RFR	
Common Parts					
020	1144483-0000		1	PLATE	
030	1144485-0000		1	SUPPORT	
050	1144488-0000		2	COLUMN	
060	1144489-0000		1	FLANGE	
070	1478189-0000		1	SUPPORT	
090	1144493-0000		1	WASHER	
100	1144494-0000		1	AXLE PIN	
110	1144495-0000		1	ECCENTRIC	
120	1144496-0000		1	ECCENTRIC	
130	1346539-0000		1	CONNECTING ROD	
140	1144498-0000		1	FLANGE	
150	90091-0408		2	BEARING SEAL 70X78X5 MM	
160	1144500-0000		1	SUPPORT	
170	1144501-0000		1	SPACER	
180	1144502-0000		1	WASHER	
190	1144503-0000		1	FLANGE	
200	1349516-0000		1	SHAFT	
210	1144505-0000		4	COLUMN	
220	1144506-0000		2	LEVER	
230	90458-1404		16	FLANGE BUSHING, 12X16X16 MM	
240	1144508-0000		2	AXLE PIN	
250	1317362-0000		6	SHAFT	
270	1317363-0000		2	SHAFT	
280	1144514-0000		2	BUSHING	
290	1144515-0000		4	INSERT	
300	1144517-0000		4	BUSHING	
310	2526249-0000		2	ROLLER	
320	1144521-0000		2	CLAMP	
330	1347018-0000		1	PLUG	
340	1349517-0000		1	TOOTHED PULLEY	
370	90214-0229		1	BALL BEARING, 65X85X10 MM	
380	90242-0271		1	O-RING 63,22X1,78 MM	
390	90242-0270		1	O-RING 82,27X1,78 MM	
410	1349518-0000		1	SUPPORT	
420	1144914-0000		2	LEVER	
430	1144915-0000		2	LEVER	
440	1144916-0000		2	ADJUSTING SCREW	
460	1348537-0000		1	TIMING BELT	
490	1498029-0000		1	PIN	
500	312105-0366		7	SCREW M6S ISO 4017 M6X12 A480	
510	312105-0368		3	SCREW M6S ISO 4017 M6X16 A480	
520	312105-0370		3	SCREW M6S ISO 4017 M6X20 A480	
535	312105-0455		1	SCREW M6S ISO 4017 M8X30 A480	
540	312105-0451		4	SCREW M6S ISO 4017 M8X20 A480	
550	312105-0457		6	SCREW M6S ISO 4014 M8X35 A480	
560	312109-0460		4	SCREW M6S ISO 4017 M8X45 A480	
570	312115-0228		2	SCREW ISO4762 M3X16 A4 80	
590	312125-0287		1	SCREW ISO 1207 M4X8 A4	
600	312155-0327		6	SCREW DIN 7991 MF6S M5X12 A4 70	
610	312155-0453		1	SCREW DIN 7991 MF6S M8X25 A4 70	
620	312318-0368		8	SCREW ISO4029 M6X16 A4	
640	312605-0318		2	HEXAGON NUT, M6M M8 A280	
660	315105-0124		2	WASHER BRB 3,2X6 RFR	
680	315105-0165		14	WASHER BRB 8,4X16 RFR	
690	315202-0217		1	O-RING 24,2X3 MM	
700	90166-0143	MM	1000	TUBE 2,5 MM PA TRANSP.	
710	90134-0068		1	CONNECTION	
720	315202-0303		1	O-RING 59,5X3 MM	
730	315202-0305		1	O-RING 69,5X3 MM	

Machine Type | Group Description | Used-In | Group Number | Page No

See previous drawings pages: 5-230, 5-232, 5-234, 5-236.

ECM: 399376 - 20090612
Group number: 1144331-0300
Assembly Drawing: 1144331-6_2_AC

This list covers pages from 5-230 to 5-241

Pos	Part No	UN	Qty	Description	Page No
Common Parts (Cont'd)					
740	315705-0267		2	PARALLEL KEY W. ROUND ENDS 8X7X30 MM	
750	315753-0122		4	RETAINING RING FOR BORE DIN 472 30 A2	
760	321130-0200		4	THRUST WASHER, 14X26X1,5 MM	
770	321313-0105		1	BALL BEARING, 25X52X15MM	
780	321313-0107		1	BALL BEARING, 35X72X17MM	
790	315105-0156		8	WASHER BRB 6,7X14 RFR	
800	90091-0297		2	RADIAL SEAL 35X47X7 MM DUST LIP	
810	90091-0298		1	RADIAL SEAL 45X65X8 MM DUST LIP	
820	90091-0380		4	SCRAPER, EXCLUDER 20X24,8X3,7 MM	
830	90134-0058		13	CONNECTION	
840	90165-0057		1	PIPE CLIP FOR TUBE D=6 MM	
850	312902-0318		2	NUT HEX. LEFT THREAD, M8 A280	
860	90166-0109	MM	600	TUBE 4 MM PA TRANSP.	
880	352113-0102		5	CABLE TIE, BLACK 188X4,8 MM	
890	352113-0101		8	CABLE TIE, BLACK 92X2,5 MM	
900	312318-0370		1	SCREW ISO4029 M6X20 A4	
B5302	90044-0194		1	PROX.SW. IN5329/IN3002-BPKG(EX90044-104)	

Pos	Part No	UN	Qty	Description	Page No

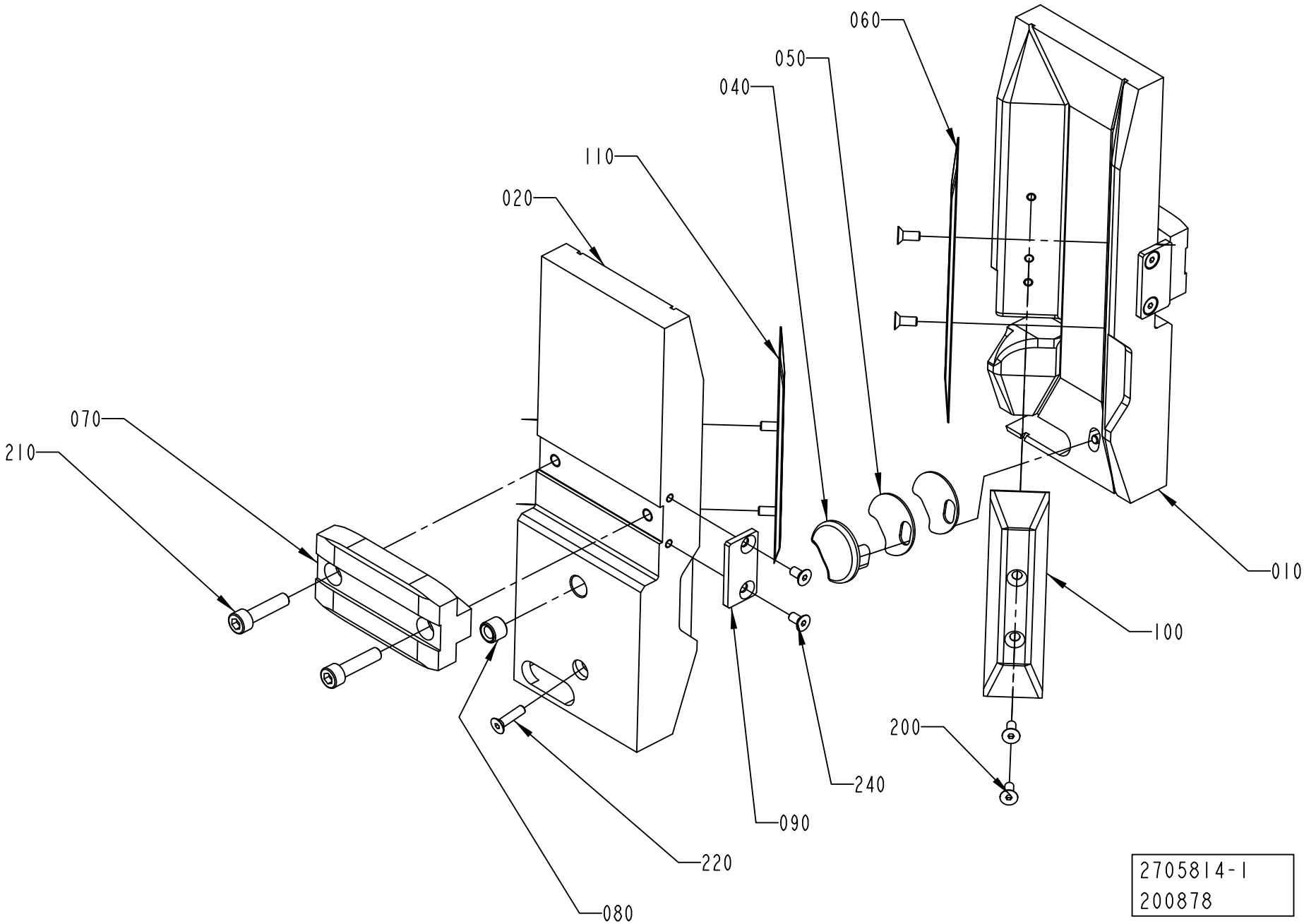
060
050
040
110
020
070
210
010
100
200
240
090
220
080
2705814-1
200878

ECM: 340442 - 20080215
Group number: 2705814-0100
Assembly Drawing: 2705814-1_1_AA

This list covers pages from 5-242 to 5-245

Pos	Part No	UN	Qty	Description	Page No
TPA 0200SQ (See drawing on page: 5-244)					
010	2674272-0000		1	PUSHER	
020	2674273-0000		1	PUSHER	
040	2674269-0000		2	NAIL	
220	312115-0297		2	SCREW ISO4762 M4X25 A4 80	
250	315105-0136		2	WASHER BRB 4,3X8 RFR	
TPA 0250SQ (See drawing on page: 5-244)					
010	2674271-0000		1	PUSHER	
020	2674270-0000		1	PUSHER	
040	2674269-0000		2	NAIL	
220	312105-0295		2	SCREW M6S ISO 4017 M4X20 A470	
250	315105-0136		2	WASHER BRB 4,3X8 RFR	
TPA 0750SQ (See drawing on page: 5-242)					
010	2647094-0000		1	PUSHER	
020	2647093-0000		1	PUSHER	
040	2647097-0000		2	NAIL	
050	2658247-0000		6	WASHER	
060	2647100-0000		4	VOLUME BULGE	
090	2698319-0000		2	BLOCK	
200	312155-0289		8	SCREW DIN 7991 MF6S M4X10 A4 70	
220	312155-0293		2	SCREW DIN 7991 MF6S M4X16 A4 70	
240	312155-0287		4	SCREW DIN 7991 MF6S M4X8 A4 70	
TPA 1000SQ (See drawing on page: 5-242)					
010	2647096-0000		1	PUSHER	
020	2647095-0000		1	PUSHER	
040	2647097-0000		2	NAIL	
050	2658247-0000		6	WASHER	
060	1523467-0000		2	VOLUME BULGE	
090	2698319-0000		2	BLOCK	
100	2658263-0000		1	VOLUME BULGE	
110	2658264-0000		1	VOLUME BULGE	
200	312155-0289		8	SCREW DIN 7991 MF6S M4X10 A4 70	
220	312155-0293		2	SCREW DIN 7991 MF6S M4X16 A4 70	
240	312155-0287		4	SCREW DIN 7991 MF6S M4X8 A4 70	
Common Parts					
070	2647098-0000		2	BLOCK	
080	2647113-0000		2	BUSHING	
210	312115-0372		4	SCREW ISO4762 M6X25 A4 80	

Pos	Part No	UN	Qty	Description	Page No

Machine Type | Group Description | Used-In | Group Number | Page No

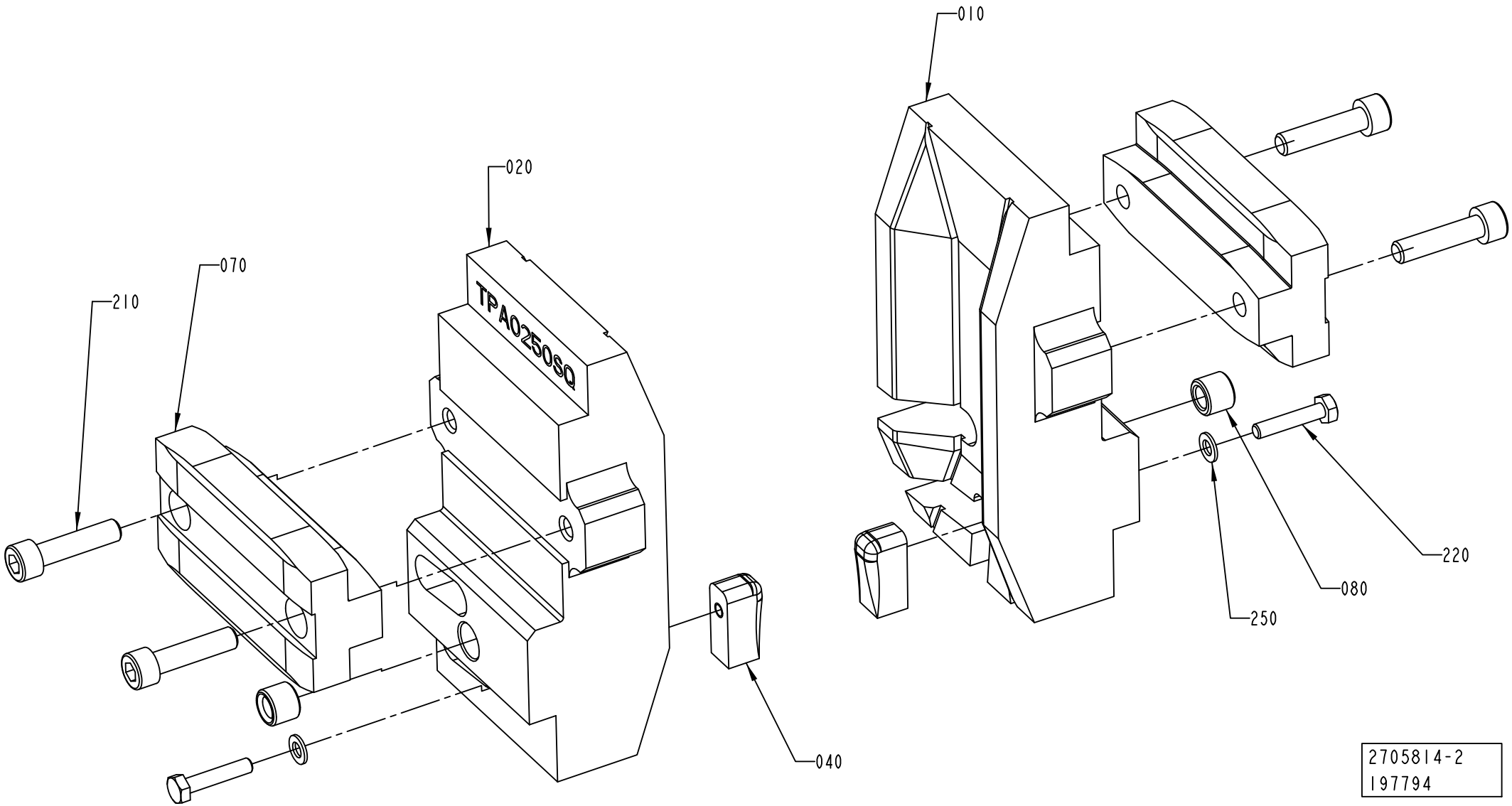

2705814-2
197794

ECM: 340442 - 20080215
Group number: 2705814-0100
Assembly Drawing: 2705814-2_1_AA

This list covers pages from 5-242 to 5-245

Pos	Part No	UN	Qty	Description	Page No
TPA 0200SQ (See drawing on page: 5-244)					
010	2674272-0000		1	PUSHER	
020	2674273-0000		1	PUSHER	
040	2674269-0000		2	NAIL	
220	312115-0297		2	SCREW ISO4762 M4X25 A4 80	
250	315105-0136		2	WASHER BRB 4,3X8 RFR	
TPA 0250SQ (See drawing on page: 5-244)					
010	2674271-0000		1	PUSHER	
020	2674270-0000		1	PUSHER	
040	2674269-0000		2	NAIL	
220	312105-0295		2	SCREW M6S ISO 4017 M4X20 A470	
250	315105-0136		2	WASHER BRB 4,3X8 RFR	
TPA 0750SQ (See drawing on page: 5-242)					
010	2647094-0000		1	PUSHER	
020	2647093-0000		1	PUSHER	
040	2647097-0000		2	NAIL	
050	2658247-0000		6	WASHER	
060	2647100-0000		4	VOLUME BULGE	
090	2698319-0000		2	BLOCK	
200	312155-0289		8	SCREW DIN 7991 MF6S M4X10 A4 70	
220	312155-0293		2	SCREW DIN 7991 MF6S M4X16 A4 70	
240	312155-0287		4	SCREW DIN 7991 MF6S M4X8 A4 70	
TPA 1000SQ (See drawing on page: 5-242)					
010	2647096-0000		1	PUSHER	
020	2647095-0000		1	PUSHER	
040	2647097-0000		2	NAIL	
050	2658247-0000		6	WASHER	
060	1523467-0000		2	VOLUME BULGE	
090	2698319-0000		2	BLOCK	
100	2658263-0000		1	VOLUME BULGE	
110	2658264-0000		1	VOLUME BULGE	
200	312155-0289		8	SCREW DIN 7991 MF6S M4X10 A4 70	
220	312155-0293		2	SCREW DIN 7991 MF6S M4X16 A4 70	
240	312155-0287		4	SCREW DIN 7991 MF6S M4X8 A4 70	
Common Parts					
070	2647098-0000		2	BLOCK	
080	2647113-0000		2	BUSHING	
210	312115-0372		4	SCREW ISO4762 M6X25 A4 80	

Pos	Part No	UN	Qty	Description	Page No

Machine Type | Group Description | Used-In | Group Number | Page No

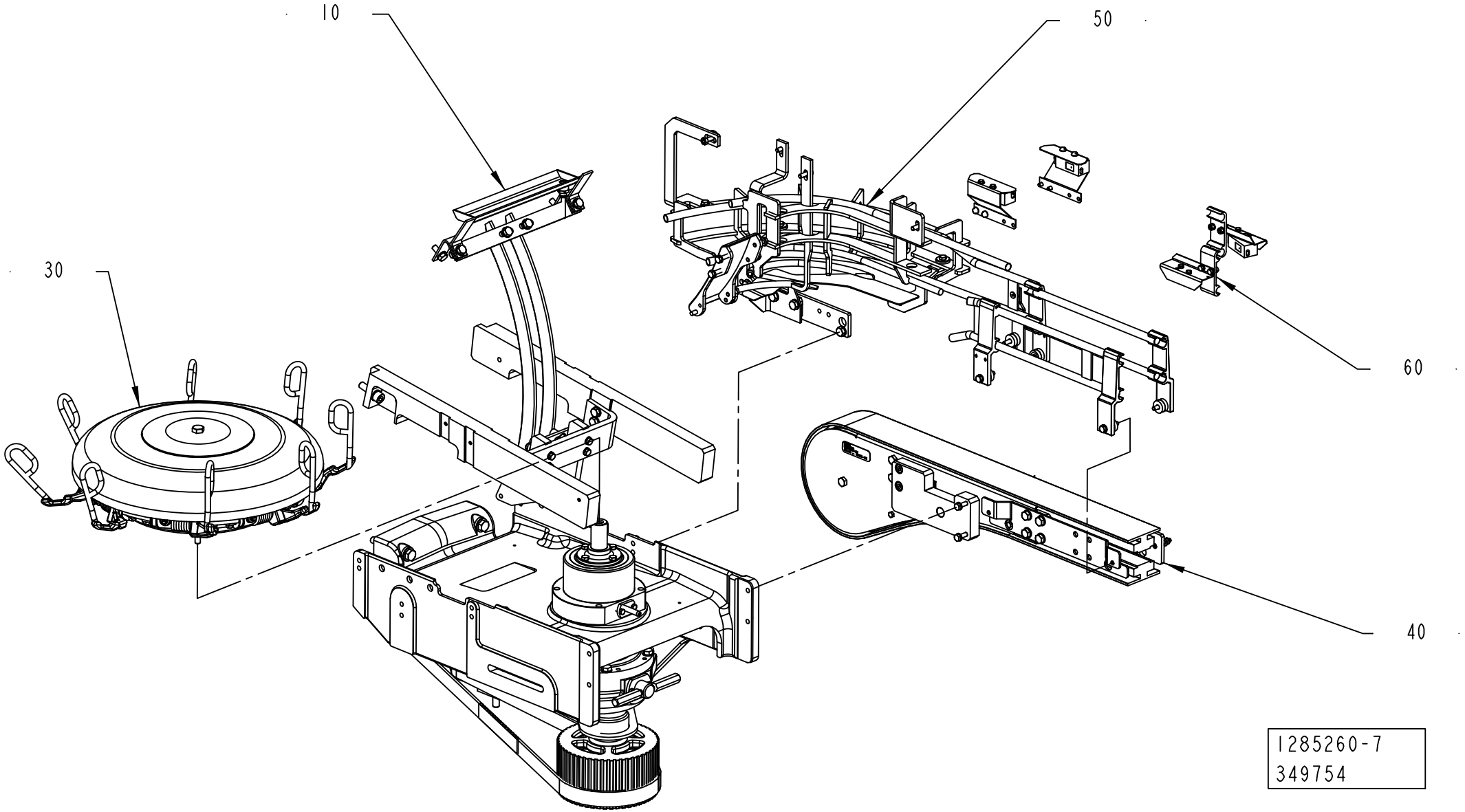
10
50
30
60
40
1285260-7
349754

Pos	Part No	UN	Qty	Description	Page No
A3/FLEX TPA 0500SQ (See drawing on page: 5-248)					
040	2963367-0100		1	END UNIT	**5-253, 5-255**
050	2732820-0100		1	RAIL OUT FEED	**5-259, 5-261, 5-263, 5-265, 5-267, 5-269, 5-271**
A3/FLEX TPA 1000SQ NOQC (See drawing on page: 5-248)					
040	2963367-0100		1	END UNIT	**5-253, 5-255**
050	2732820-0100		1	RAIL OUT FEED	**5-259, 5-261, 5-263, 5-265, 5-267, 5-269, 5-271**
A3/FLEX TPA 1000SQ QC, A3/FLEX TPA 0750SQ QC (See drawing on page: 5-248)					
040	2963367-0100		1	END UNIT	**5-253, 5-255**
050	2732820-0100		1	RAIL OUT FEED	**5-259, 5-261, 5-263, 5-265, 5-267, 5-269, 5-271**
A3/FLEX TBA 0200M, A3/FLEX TBA 0250S (See drawing on page: 5-246)					
040	2963367-0100		1	END UNIT	**5-253, 5-255**
050	2732820-0100		1	RAIL OUT FEED	**5-259, 5-261, 5-263, 5-265, 5-267, 5-269, 5-271**
A3/FLEX TBA 0200S (See drawing on page: 5-246)					
040	2963367-0100		1	END UNIT	**5-253, 5-255**
050	2732820-0100		1	RAIL OUT FEED	**5-259, 5-261, 5-263, 5-265, 5-267, 5-269, 5-271**
A3/FLEX TBA 0250B QC, A3/FLEX TBA 0200B QC, A3/FLEX TBA 0330S QC (See drawing on page: 5-246)					
040	2963367-0100		1	END UNIT	**5-253, 5-255**
050	2732820-0100		1	RAIL OUT FEED	**5-259, 5-261, 5-263, 5-265, 5-267, 5-269, 5-271**
A3/FLEX TBA 0250SQ QC, A3/FLEX TBA 0200SQ QC (See drawing on page: 5-248)					
040	2963367-0100		1	END UNIT	**5-253, 5-255**
050	2732820-0100		1	RAIL OUT FEED	**5-259, 5-261, 5-263, 5-265, 5-267, 5-269, 5-271**
A3/FLEX TBA 0500B QC, A3/FLEX TBA 1000B QC (See drawing on page: 5-246)					
040	2963367-0100		1	END UNIT	**5-253, 5-255**
050	2732820-0100		1	RAIL OUT FEED	**5-259, 5-261, 5-263, 5-265, 5-267, 5-269, 5-271**
A3/FLEX TBA 0500S (See drawing on page: 5-246)					
040	2963367-0100		1	END UNIT	**5-253, 5-255**
050	2732820-0100		1	RAIL OUT FEED	**5-259, 5-261, 5-263, 5-265, 5-267, 5-269, 5-271**
A3/FLEX TBA 0500SQ QC, A3/FLEX TBA 1000SQ QC (See drawing on page: 5-248)					
040	2963367-0100		1	END UNIT	**5-253, 5-255**
050	2732820-0100		1	RAIL OUT FEED	**5-259, 5-261, 5-263, 5-265, 5-267, 5-269, 5-271**
A3/FLEX TBA 1000S, A3/FLEX TBA 1000B NOQC (See drawing on page: 5-246)					
040	2963367-0100		1	END UNIT	**5-253, 5-255**
050	2732820-0100		1	RAIL OUT FEED	**5-259, 5-261, 5-263, 5-265, 5-267, 5-269, 5-271**
A3/FLEX TBA 1000SQ NOQC (See drawing on page: 5-248)					
040	2963367-0100		1	END UNIT	**5-253, 5-255**
050	2732820-0100		1	RAIL OUT FEED	**5-259, 5-261, 5-263, 5-265, 5-267, 5-269, 5-271**
A3/FLEX TBA 1400B (See drawing on page: 5-250)					
040	2598508-0100		1	INFEED/OUTFEED CONVEYOR	**5-277**
050	2732820-0100		1	RAIL OUT FEED	**5-259, 5-261, 5-263, 5-265, 5-267, 5-269, 5-271**
A3/FLEX TBA 1500S (See drawing on page: 5-246)					
040	2963367-0100		1	END UNIT	**5-253, 5-255**
050	2732820-0100		1	RAIL OUT FEED	**5-259, 5-261, 5-263, 5-265, 5-267, 5-269, 5-271**
A3/FLEX TBA 1890S QC, A3/FLEX TBA 2000S QC (See drawing on page: 5-250)					
040	2598508-0100		1	INFEED/OUTFEED CONVEYOR	**5-277**
050	2732820-0100		1	RAIL OUT FEED	**5-259, 5-261, 5-263, 5-265, 5-267, 5-269, 5-271**
A3/FLEX TPA 0200SQ QC L-OUT, A3/FLEX TPA 0250SQ QC L-OUT (See drawing on page: 5-248)					
040	2963367-0100		1	END UNIT	**5-253, 5-255**
050	2732820-0100		1	RAIL OUT FEED	**5-259, 5-261, 5-263, 5-265, 5-267, 5-269, 5-271**
A3/FLEX TPA 0200SQ QC R-OUT, A3/FLEX TPA 0250SQ QC R-OUT (See drawing on page: 5-246)					
040	2963367-0100		1	END UNIT	**5-253, 5-255**
050	2732820-0100		1	RAIL OUT FEED	**5-259, 5-261, 5-263, 5-265, 5-267, 5-269, 5-271**
A3/FLEX TPA 0330SQ L-OUT (See drawing on page: 5-248)					
040	2963367-0100		1	END UNIT	**5-253, 5-255**
050	2732820-0100		1	RAIL OUT FEED	**5-259, 5-261, 5-263, 5-265, 5-267, 5-269, 5-271**
A3/FLEX TPA 0330SQ R-OUT (See drawing on page: 5-246)					
040	2963367-0100		1	END UNIT	**5-253, 5-255**
050	2732820-0100		1	RAIL OUT FEED	**5-259, 5-261, 5-263, 5-265, 5-267, 5-269, 5-271**
Common Parts					
010	2732825-0100		1	RAIL	**5-279, 5-281**
020	1484210-0200		1	OUT FEED DRIVING SYSTEM	**5-283**
030	1487038-0300		1	OUTFEED WHEEL	**5-289, 5-291, 5-293, 5-295**
060	1512339-0100		1	PHOTOCELL OUTFEED	**5-297, 5-299, 6-61, 6-63**

Machine Type | Group Description | Used-In | Group Number | Page No

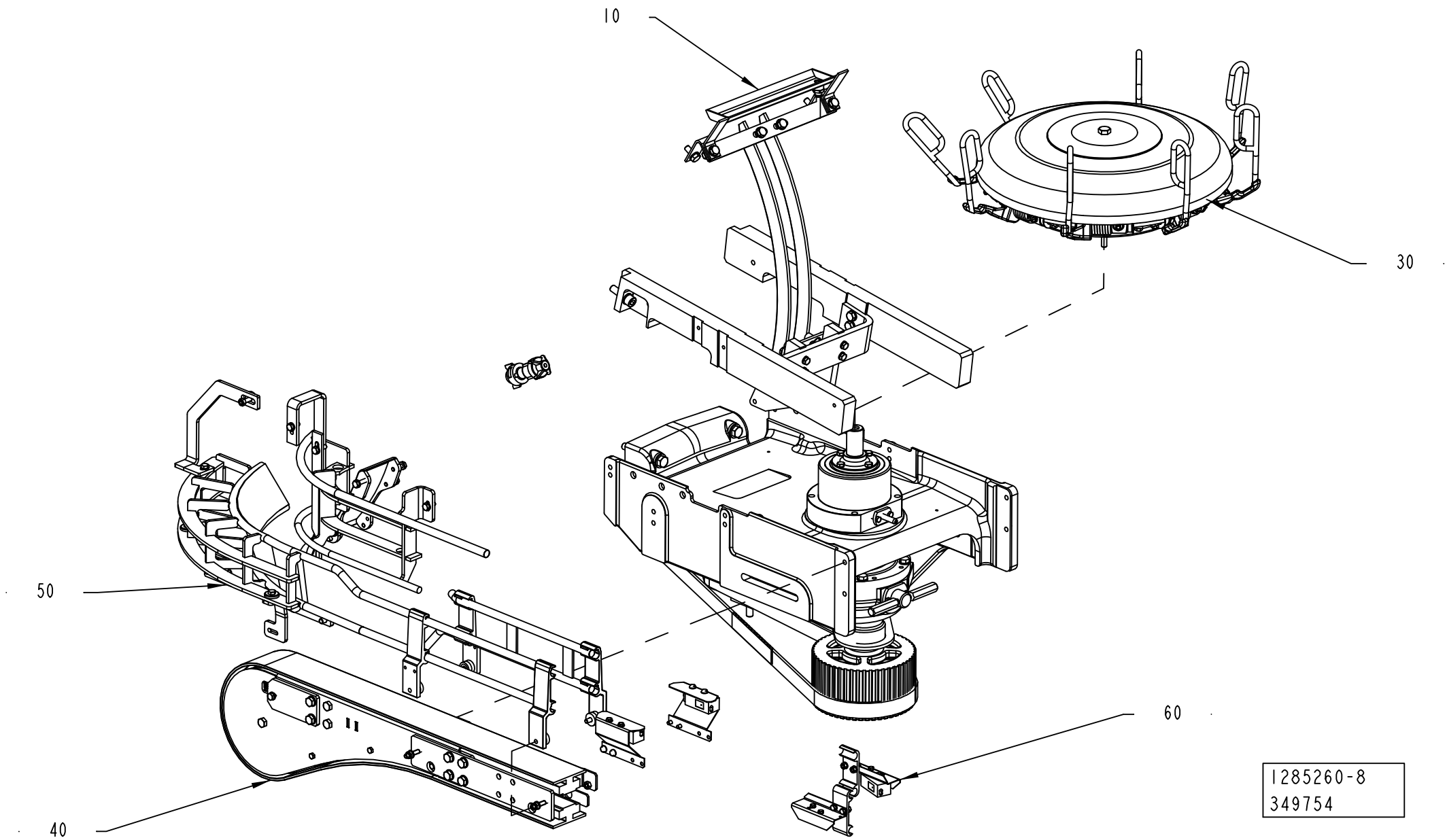
10
30
50
40
60
1285260-8
349754

Pos	Part No	UN	Qty	Description	Page No
A3/FLEX TPA 0500SQ (See drawing on page: 5-248)					
040	2963367-0100		1	END UNIT	**5-253, 5-255**
050	2732820-0100		1	RAIL OUT FEED	**5-259, 5-261, 5-263, 5-265, 5-267, 5-269, 5-271**
A3/FLEX TPA 1000SQ NOQC (See drawing on page: 5-248)					
040	2963367-0100		1	END UNIT	**5-253, 5-255**
050	2732820-0100		1	RAIL OUT FEED	**5-259, 5-261, 5-263, 5-265, 5-267, 5-269, 5-271**
A3/FLEX TPA 1000SQ QC, A3/FLEX TPA 0750SQ QC (See drawing on page: 5-248)					
040	2963367-0100		1	END UNIT	**5-253, 5-255**
050	2732820-0100		1	RAIL OUT FEED	**5-259, 5-261, 5-263, 5-265, 5-267, 5-269, 5-271**
A3/FLEX TBA 0200M, A3/FLEX TBA 0250S (See drawing on page: 5-246)					
040	2963367-0100		1	END UNIT	**5-253, 5-255**
050	2732820-0100		1	RAIL OUT FEED	**5-259, 5-261, 5-263, 5-265, 5-267, 5-269, 5-271**
A3/FLEX TBA 0200S (See drawing on page: 5-246)					
040	2963367-0100		1	END UNIT	**5-253, 5-255**
050	2732820-0100		1	RAIL OUT FEED	**5-259, 5-261, 5-263, 5-265, 5-267, 5-269, 5-271**
A3/FLEX TBA 0250B QC, A3/FLEX TBA 0200B QC, A3/FLEX TBA 0330S QC (See drawing on page: 5-246)					
040	2963367-0100		1	END UNIT	**5-253, 5-255**
050	2732820-0100		1	RAIL OUT FEED	**5-259, 5-261, 5-263, 5-265, 5-267, 5-269, 5-271**
A3/FLEX TBA 0250SQ QC, A3/FLEX TBA 0200SQ QC (See drawing on page: 5-248)					
040	2963367-0100		1	END UNIT	**5-253, 5-255**
050	2732820-0100		1	RAIL OUT FEED	**5-259, 5-261, 5-263, 5-265, 5-267, 5-269, 5-271**
A3/FLEX TBA 0500B QC, A3/FLEX TBA 1000B QC (See drawing on page: 5-246)					
040	2963367-0100		1	END UNIT	**5-253, 5-255**
050	2732820-0100		1	RAIL OUT FEED	**5-259, 5-261, 5-263, 5-265, 5-267, 5-269, 5-271**
A3/FLEX TBA 0500S (See drawing on page: 5-246)					
040	2963367-0100		1	END UNIT	**5-253, 5-255**
050	2732820-0100		1	RAIL OUT FEED	**5-259, 5-261, 5-263, 5-265, 5-267, 5-269, 5-271**
A3/FLEX TBA 0500SQ QC, A3/FLEX TBA 1000SQ QC (See drawing on page: 5-248)					
040	2963367-0100		1	END UNIT	**5-253, 5-255**
050	2732820-0100		1	RAIL OUT FEED	**5-259, 5-261, 5-263, 5-265, 5-267, 5-269, 5-271**
A3/FLEX TBA 1000S, A3/FLEX TBA 1000B NOQC (See drawing on page: 5-246)					
040	2963367-0100		1	END UNIT	**5-253, 5-255**
050	2732820-0100		1	RAIL OUT FEED	**5-259, 5-261, 5-263, 5-265, 5-267, 5-269, 5-271**
A3/FLEX TBA 1000SQ NOQC (See drawing on page: 5-248)					
040	2963367-0100		1	END UNIT	**5-253, 5-255**
050	2732820-0100		1	RAIL OUT FEED	**5-259, 5-261, 5-263, 5-265, 5-267, 5-269, 5-271**
A3/FLEX TBA 1400B (See drawing on page: 5-250)					
040	2598508-0100		1	INFEED/OUTFEED CONVEYOR	**5-277**
050	2732820-0100		1	RAIL OUT FEED	**5-259, 5-261, 5-263, 5-265, 5-267, 5-269, 5-271**
A3/FLEX TBA 1500S (See drawing on page: 5-246)					
040	2963367-0100		1	END UNIT	**5-253, 5-255**
050	2732820-0100		1	RAIL OUT FEED	**5-259, 5-261, 5-263, 5-265, 5-267, 5-269, 5-271**
A3/FLEX TBA 1890S QC, A3/FLEX TBA 2000S QC (See drawing on page: 5-250)					
040	2598508-0100		1	INFEED/OUTFEED CONVEYOR	**5-277**
050	2732820-0100		1	RAIL OUT FEED	**5-259, 5-261, 5-263, 5-265, 5-267, 5-269, 5-271**
A3/FLEX TPA 0200SQ QC L-OUT, A3/FLEX TPA 0250SQ QC L-OUT (See drawing on page: 5-248)					
040	2963367-0100		1	END UNIT	**5-253, 5-255**
050	2732820-0100		1	RAIL OUT FEED	**5-259, 5-261, 5-263, 5-265, 5-267, 5-269, 5-271**
A3/FLEX TPA 0200SQ QC R-OUT, A3/FLEX TPA 0250SQ QC R-OUT (See drawing on page: 5-246)					
040	2963367-0100		1	END UNIT	**5-253, 5-255**
050	2732820-0100		1	RAIL OUT FEED	**5-259, 5-261, 5-263, 5-265, 5-267, 5-269, 5-271**
A3/FLEX TPA 0330SQ L-OUT (See drawing on page: 5-248)					
040	2963367-0100		1	END UNIT	**5-253, 5-255**
050	2732820-0100		1	RAIL OUT FEED	**5-259, 5-261, 5-263, 5-265, 5-267, 5-269, 5-271**
A3/FLEX TPA 0330SQ R-OUT (See drawing on page: 5-246)					
040	2963367-0100		1	END UNIT	**5-253, 5-255**
050	2732820-0100		1	RAIL OUT FEED	**5-259, 5-261, 5-263, 5-265, 5-267, 5-269, 5-271**
Common Parts					
010	2732825-0100		1	RAIL	**5-279, 5-281**
020	1484210-0200		1	OUT FEED DRIVING SYSTEM	**5-283**
030	1487038-0300		1	OUTFEED WHEEL	**5-289, 5-291, 5-293, 5-295**
060	1512339-0100		1	PHOTOCELL OUTFEED	**5-297, 5-299, 6-61, 6-63**

Machine Type	Group Description	Used-In	Group Number	Page No

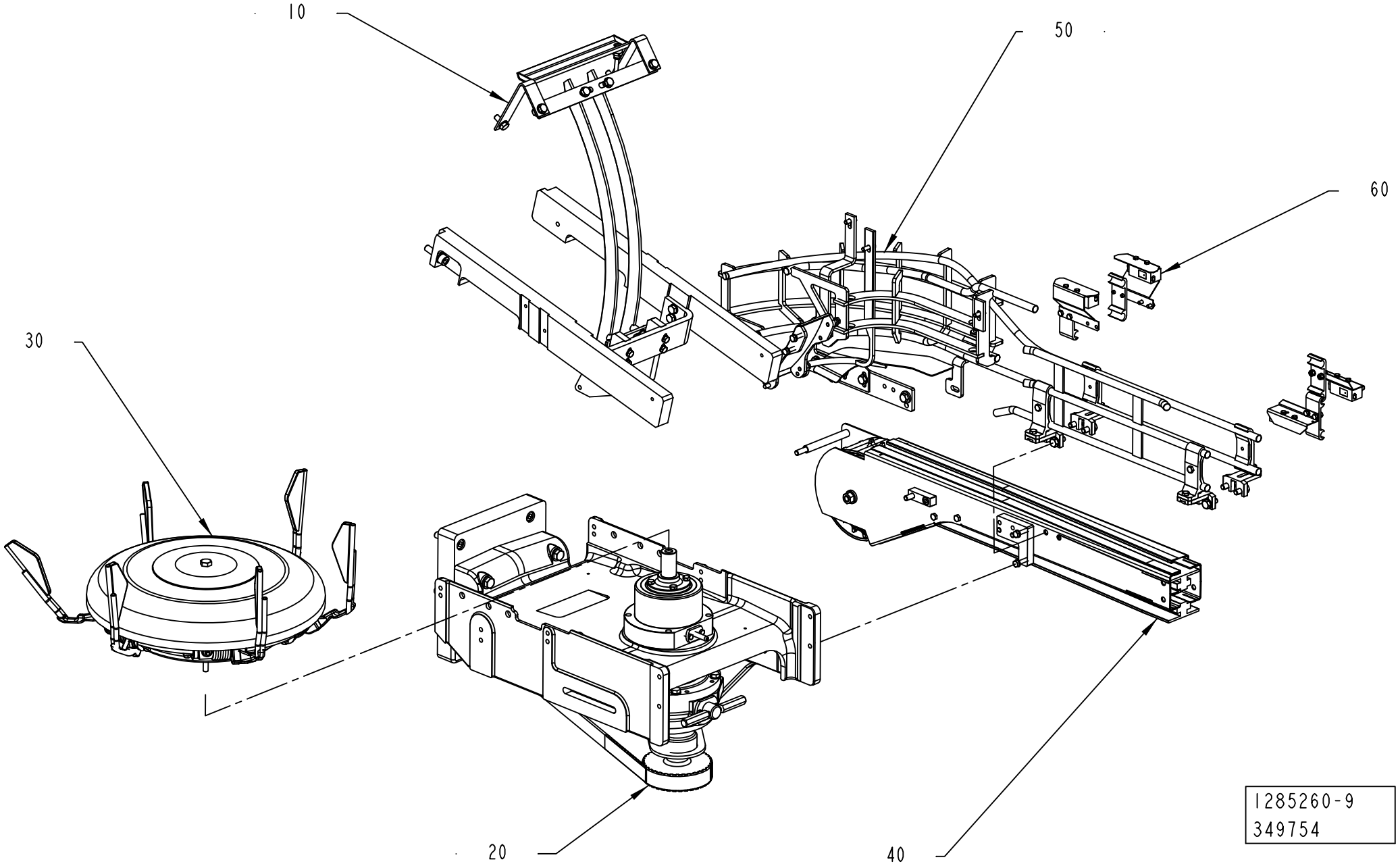
10
50
60
30
20
40
1285260-9
349754

Pos	Part No	UN	Qty	Description	Page No
A3/FLEX TPA 0500SQ (See drawing on page: 5-248)					
040	2963367-0100		1	END UNIT	**5-253, 5-255**
050	2732820-0100		1	RAIL OUT FEED	**5-259, 5-261, 5-263, 5-265, 5-267, 5-269, 5-271**
A3/FLEX TPA 1000SQ NOQC (See drawing on page: 5-248)					
040	2963367-0100		1	END UNIT	**5-253, 5-255**
050	2732820-0100		1	RAIL OUT FEED	**5-259, 5-261, 5-263, 5-265, 5-267, 5-269, 5-271**
A3/FLEX TPA 1000SQ QC, A3/FLEX TPA 0750SQ QC (See drawing on page: 5-248)					
040	2963367-0100		1	END UNIT	**5-253, 5-255**
050	2732820-0100		1	RAIL OUT FEED	**5-259, 5-261, 5-263, 5-265, 5-267, 5-269, 5-271**
A3/FLEX TBA 0200M, A3/FLEX TBA 0250S (See drawing on page: 5-246)					
040	2963367-0100		1	END UNIT	**5-253, 5-255**
050	2732820-0100		1	RAIL OUT FEED	**5-259, 5-261, 5-263, 5-265, 5-267, 5-269, 5-271**
A3/FLEX TBA 0200S (See drawing on page: 5-246)					
040	2963367-0100		1	END UNIT	**5-253, 5-255**
050	2732820-0100		1	RAIL OUT FEED	**5-259, 5-261, 5-263, 5-265, 5-267, 5-269, 5-271**
A3/FLEX TBA 0250B QC, A3/FLEX TBA 0200B QC, A3/FLEX TBA 0330S QC (See drawing on page: 5-246)					
040	2963367-0100		1	END UNIT	**5-253, 5-255**
050	2732820-0100		1	RAIL OUT FEED	**5-259, 5-261, 5-263, 5-265, 5-267, 5-269, 5-271**
A3/FLEX TBA 0250SQ QC, A3/FLEX TBA 0200SQ QC (See drawing on page: 5-248)					
040	2963367-0100		1	END UNIT	**5-253, 5-255**
050	2732820-0100		1	RAIL OUT FEED	**5-259, 5-261, 5-263, 5-265, 5-267, 5-269, 5-271**
A3/FLEX TBA 0500B QC, A3/FLEX TBA 1000B QC (See drawing on page: 5-246)					
040	2963367-0100		1	END UNIT	**5-253, 5-255**
050	2732820-0100		1	RAIL OUT FEED	**5-259, 5-261, 5-263, 5-265, 5-267, 5-269, 5-271**
A3/FLEX TBA 0500S (See drawing on page: 5-246)					
040	2963367-0100		1	END UNIT	**5-253, 5-255**
050	2732820-0100		1	RAIL OUT FEED	**5-259, 5-261, 5-263, 5-265, 5-267, 5-269, 5-271**
A3/FLEX TBA 0500SQ QC, A3/FLEX TBA 1000SQ QC (See drawing on page: 5-248)					
040	2963367-0100		1	END UNIT	**5-253, 5-255**
050	2732820-0100		1	RAIL OUT FEED	**5-259, 5-261, 5-263, 5-265, 5-267, 5-269, 5-271**
A3/FLEX TBA 1000S, A3/FLEX TBA 1000B NOQC (See drawing on page: 5-246)					
040	2963367-0100		1	END UNIT	**5-253, 5-255**
050	2732820-0100		1	RAIL OUT FEED	**5-259, 5-261, 5-263, 5-265, 5-267, 5-269, 5-271**
A3/FLEX TBA 1000SQ NOQC (See drawing on page: 5-248)					
040	2963367-0100		1	END UNIT	**5-253, 5-255**
050	2732820-0100		1	RAIL OUT FEED	**5-259, 5-261, 5-263, 5-265, 5-267, 5-269, 5-271**
A3/FLEX TBA 1400B (See drawing on page: 5-250)					
040	2598508-0100		1	INFEED/OUTFEED CONVEYOR	**5-277**
050	2732820-0100		1	RAIL OUT FEED	**5-259, 5-261, 5-263, 5-265, 5-267, 5-269, 5-271**
A3/FLEX TBA 1500S (See drawing on page: 5-246)					
040	2963367-0100		1	END UNIT	**5-253, 5-255**
050	2732820-0100		1	RAIL OUT FEED	**5-259, 5-261, 5-263, 5-265, 5-267, 5-269, 5-271**
A3/FLEX TBA 1890S QC, A3/FLEX TBA 2000S QC (See drawing on page: 5-250)					
040	2598508-0100		1	INFEED/OUTFEED CONVEYOR	**5-277**
050	2732820-0100		1	RAIL OUT FEED	**5-259, 5-261, 5-263, 5-265, 5-267, 5-269, 5-271**
A3/FLEX TPA 0200SQ QC L-OUT, A3/FLEX TPA 0250SQ QC L-OUT (See drawing on page: 5-248)					
040	2963367-0100		1	END UNIT	**5-253, 5-255**
050	2732820-0100		1	RAIL OUT FEED	**5-259, 5-261, 5-263, 5-265, 5-267, 5-269, 5-271**
A3/FLEX TPA 0200SQ QC R-OUT, A3/FLEX TPA 0250SQ QC R-OUT (See drawing on page: 5-246)					
040	2963367-0100		1	END UNIT	**5-253, 5-255**
050	2732820-0100		1	RAIL OUT FEED	**5-259, 5-261, 5-263, 5-265, 5-267, 5-269, 5-271**
A3/FLEX TPA 0330SQ L-OUT (See drawing on page: 5-248)					
040	2963367-0100		1	END UNIT	**5-253, 5-255**
050	2732820-0100		1	RAIL OUT FEED	**5-259, 5-261, 5-263, 5-265, 5-267, 5-269, 5-271**
A3/FLEX TPA 0330SQ R-OUT (See drawing on page: 5-246)					
040	2963367-0100		1	END UNIT	**5-253, 5-255**
050	2732820-0100		1	RAIL OUT FEED	**5-259, 5-261, 5-263, 5-265, 5-267, 5-269, 5-271**
Common Parts					
010	2732825-0100		1	RAIL	**5-279, 5-281**
020	1484210-0200		1	OUT FEED DRIVING SYSTEM	**5-283**
030	1487038-0300		1	OUTFEED WHEEL	**5-289, 5-291, 5-293, 5-295**
060	1512339-0100		1	PHOTOCELL OUTFEED	**5-297, 5-299, 6-61, 6-63**

Machine Type | Group Description | Used-In | Group Number | Page No

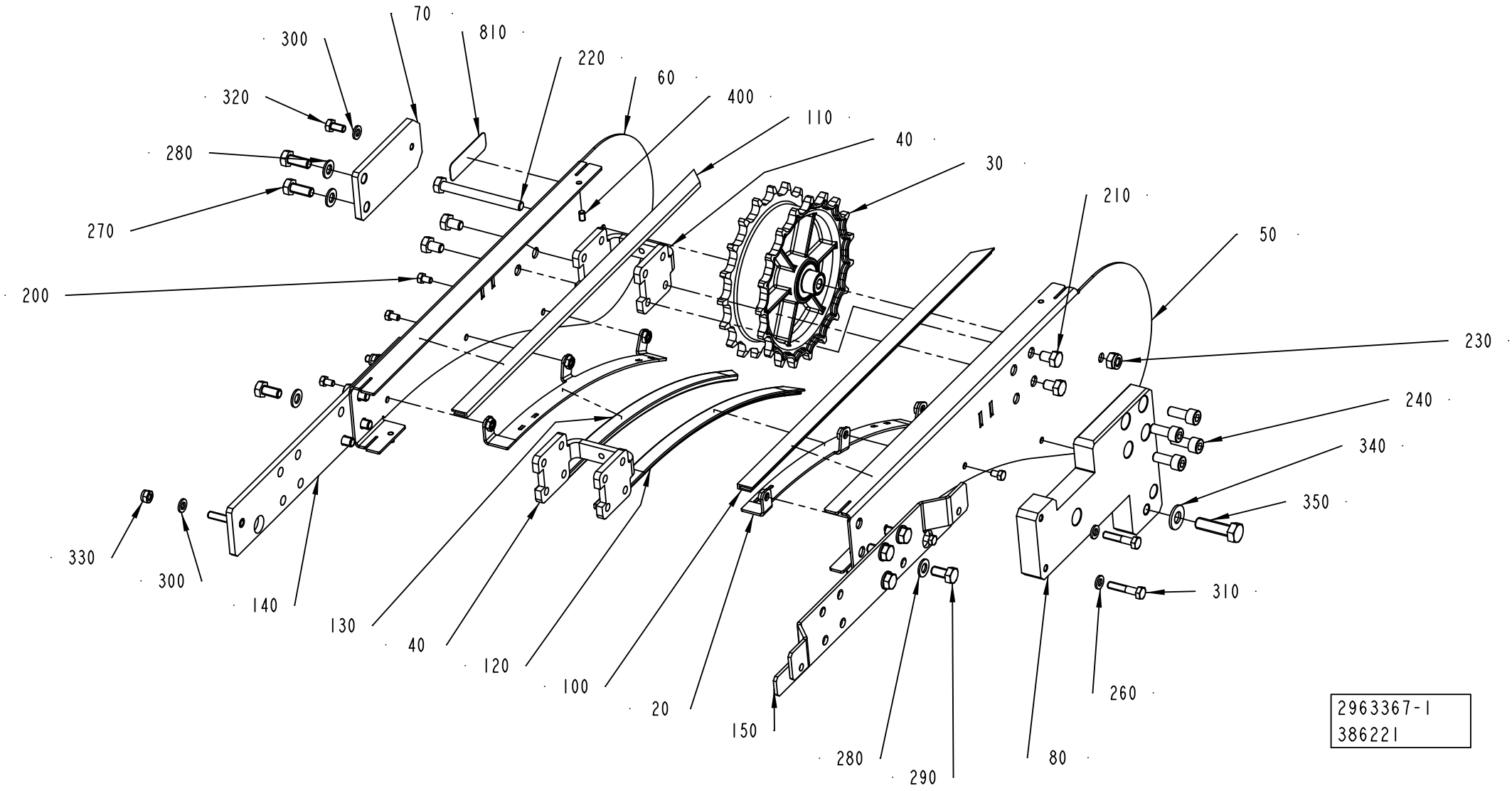
70
300
810
220
60
400
320
110
40
280
30
210
270
50
200
230
240
340
350
330
310
300
140
130
40
120
100
20
150
280
290
80
260
2963367-1
386221

ECM: 389644 - 20090701
Group number: 2963367-0100
Assembly Drawing: 2963367-1_1_AB

This list covers pages from 5-252 to 5-255

Pos	Part No	UN	Qty	Description	Page No
-					
020	2656407-0000		2	SLIDE RAIL	
030	2561244-0200		1	DRIVE WHEEL	**5-257, 6-67**
040	2561206-0000		2	SPACER	
050	2656686-0000		1	SIDE PLATE	
060	2656687-0000		1	SIDE PLATE	
070	2959220-0000		1	PLATE	
080	2959221-0000		1	SUPPORT	
100	1550595-4153		1	SLIDING STRIP	
110	1550595-4154		1	SLIDING STRIP	
120	1550595-3353		1	SLIDING STRIP	
130	1550595-3354		1	SLIDING STRIP	
140	2959222-0000		1	PLATE	
150	2959223-0000		1	PLATE	
200	312105-0323		6	SCREW M6S ISO 4017 M5X8 A480	
210	312105-0447		4	SCREW M6S ISO 4017 M8X12 A480	
220	312105-0467		1	SCREW M6S ISO 4014 M8X80 A480	
230	312812-0318		1	HEXAGON NUT, NY-LOCK M8 A480	
240	312115-0451		4	SCREW ISO4762 M8X20 A4 80	
260	315106-0153		2	WASHER ISO 7089-6-200 HV A4	
270	312105-0451		2	SCREW M6S ISO 4017 M8X20 A480	
280	315105-0165		10	WASHER BRB 8,4X16 RFR	
290	312105-0449		8	SCREW M6S ISO 4017 M8X16 A480	
300	315105-0153		3	WASHER BRB 6,4X12 RFR	
310	312105-0374		2	SCREW M6S ISO 4014 M6X30 A480	
320	312105-0366		1	SCREW M6S ISO 4017 M6X12 A480	
330	312812-0316		2	HEXAGON NUT, NY-LOCK M6 A480	
340	315105-0173		1	WASHER BRB 10,5X22 RFR	
350	312105-0497		1	SCREW M6S ISO 4017 M10X35 A480	
400	90459-7293		4	SET SCREW DIN 551M5X8 PA66	
810	1086870-0000		1	SIGN	

Pos	Part No	UN	Qty	Description	Page No

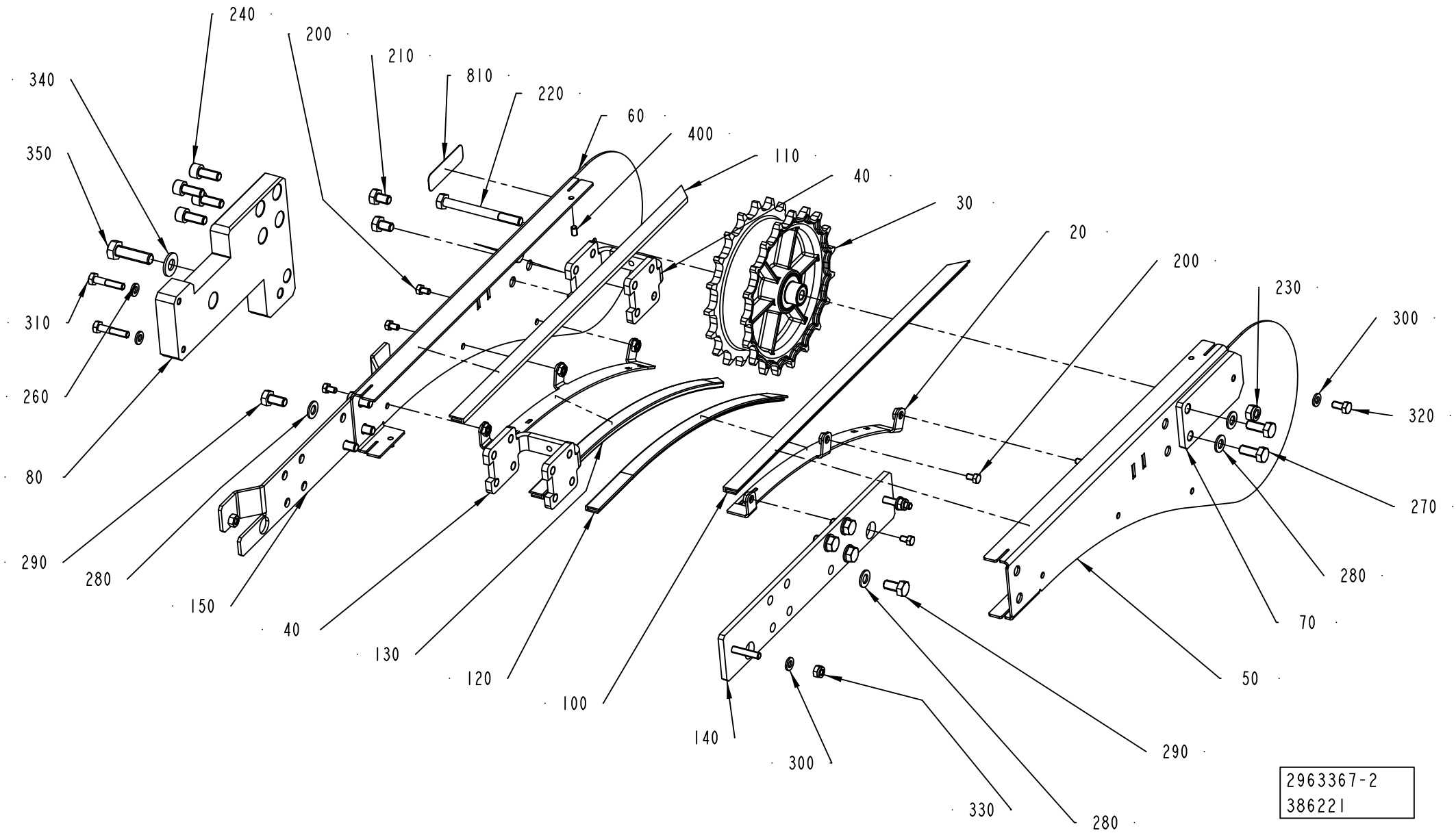
240
200
210
810
220
60
400
110
40
30
20
200
230
300
320
270
280
70
50
290
330
280
300
140
100
120
130
40
150
280
290
80
260
310
350
340
2963367-2
386221

ECM: 389644 - 20090701
Group number: 2963367-0100
Assembly Drawing: 2963367-2_1_AB

This list covers pages from 5-252 to 5-255

Pos	Part No	UN	Qty	Description	Page No
-					
020	2656407-0000		2	SLIDE RAIL	
030	2561244-0200		1	DRIVE WHEEL	**5-257, 6-67**
040	2561206-0000		2	SPACER	
050	2656686-0000		1	SIDE PLATE	
060	2656687-0000		1	SIDE PLATE	
070	2959220-0000		1	PLATE	
080	2959221-0000		1	SUPPORT	
100	1550595-4153		1	SLIDING STRIP	
110	1550595-4154		1	SLIDING STRIP	
120	1550595-3353		1	SLIDING STRIP	
130	1550595-3354		1	SLIDING STRIP	
140	2959222-0000		1	PLATE	
150	2959223-0000		1	PLATE	
200	312105-0323		6	SCREW M6S ISO 4017 M5X8 A480	
210	312105-0447		4	SCREW M6S ISO 4017 M8X12 A480	
220	312105-0467		1	SCREW M6S ISO 4014 M8X80 A480	
230	312812-0318		1	HEXAGON NUT, NY-LOCK M8 A480	
240	312115-0451		4	SCREW ISO4762 M8X20 A4 80	
260	315106-0153		2	WASHER ISO 7089-6-200 HV A4	
270	312105-0451		2	SCREW M6S ISO 4017 M8X20 A480	
280	315105-0165		10	WASHER BRB 8,4X16 RFR	
290	312105-0449		8	SCREW M6S ISO 4017 M8X16 A480	
300	315105-0153		3	WASHER BRB 6,4X12 RFR	
310	312105-0374		2	SCREW M6S ISO 4014 M6X30 A480	
320	312105-0366		1	SCREW M6S ISO 4017 M6X12 A480	
330	312812-0316		2	HEXAGON NUT, NY-LOCK M6 A480	
340	315105-0173		1	WASHER BRB 10,5X22 RFR	
350	312105-0497		1	SCREW M6S ISO 4017 M10X35 A480	
400	90459-7293		4	SET SCREW DIN 551M5X8 PA66	
810	1086870-0000		1	SIGN	

Pos	Part No	UN	Qty	Description	Page No

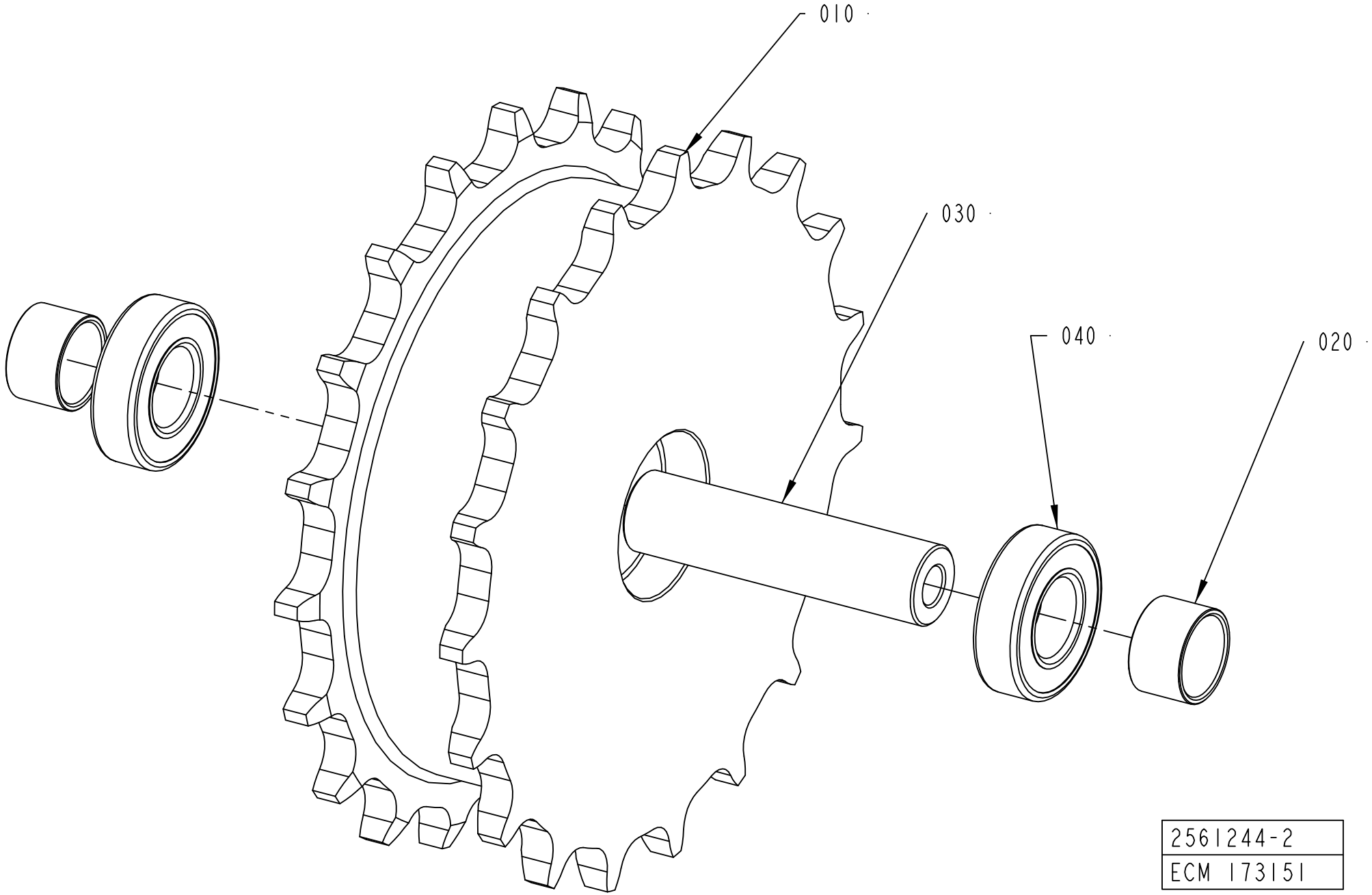
010
030
040
020
2561244-2
ECM 173151

ECM: 306227 - 20070817
Group number: 2561244-0200
Assembly Drawing: 2561244-2_1_AA

Pos	Part No	UN	Qty	Description	Page No
-					
010	2656672-0000		1	SPROCKET	
020	2656673-0000		2	SPACER	
030	2561267-0000		1	SHAFT	
040	1550348-0001		2	BEARING	

Pos	Part No	UN	Qty	Description	Page No

RAIL OUT FEED

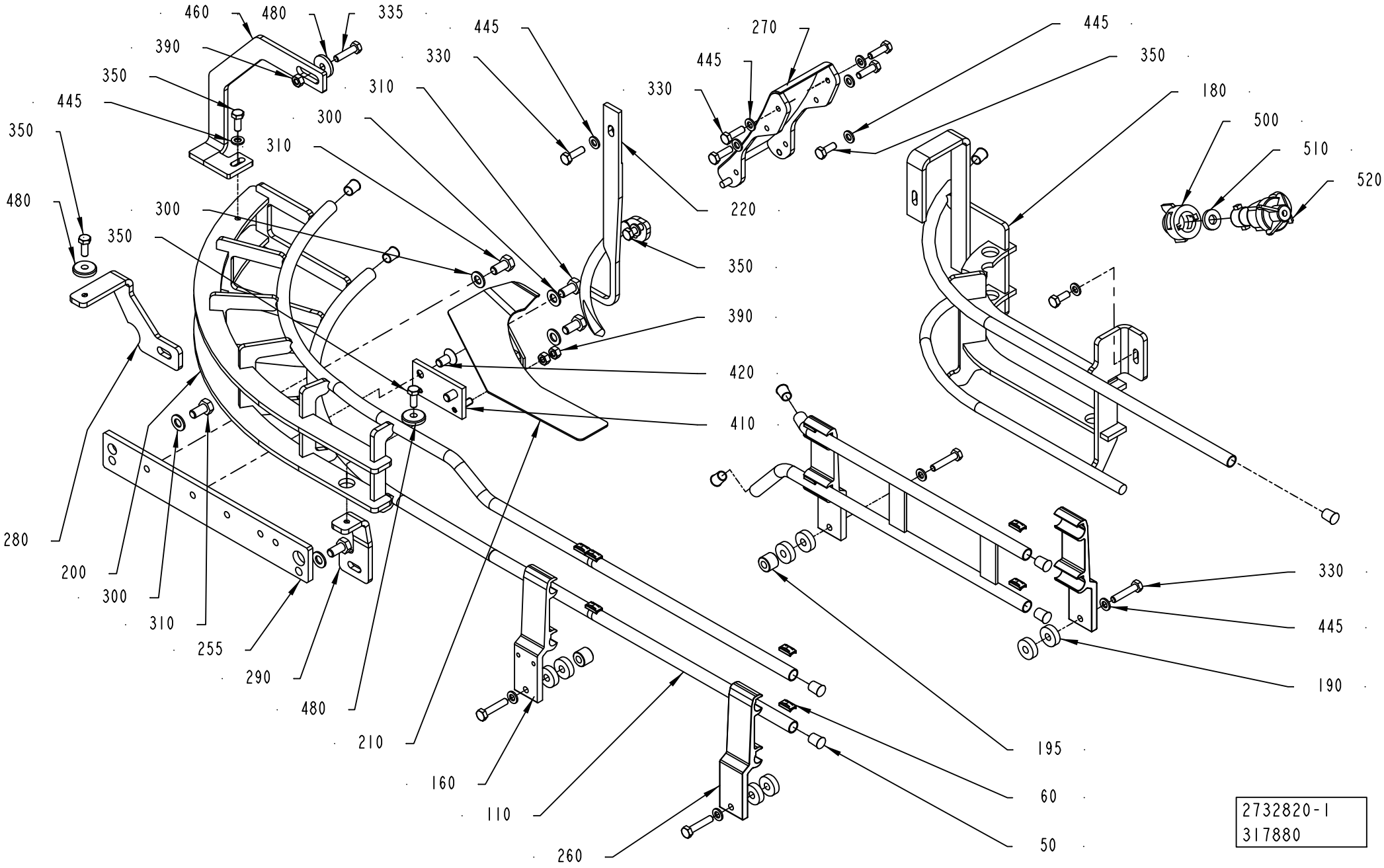

Pos	Part No	UN	Qty	Description	Page No
TBA 1890S QC, TBA 2000S QC (See drawing on page: 5-262)					
050	484701-0000		18	SHUTTER	
110	2640076-0000		2	RAIL	
120	2639832-0000		1	RAIL	
160	1550743-0100		2	RAIL HOLDER	**5-273**
180	2724940-0000		1	RAIL	
200	2693464-0000		1	RAIL	
210	2652206-0000		1	GUIDE	
220	2724941-0000		1	RAIL	
260	1550743-0100		2	RAIL HOLDER	**5-273**
270	1538970-0000		1	SLIDE	
280	2804292-0000		1	BRACKET	
290	2804293-0000		1	BRACKET	
300	315105-0165		4	WASHER BRB 8,4X16 RFR	
305	2655500-0000		1	WASHER	
310	312105-0449		4	SCREW M6S ISO 4017 M8X16 A480	
315	312105-0451		1	SCREW M6S ISO 4017 M8X20 A480	
350	312105-0368		3	SCREW M6S ISO 4017 M6X16 A480	
390	312605-0316		1	HEXAGON NUT, M6M M6 A280	
400	312105-0370		5	SCREW M6S ISO 4017 M6X20 A480	
445	315105-0153		9	WASHER BRB 6,4X12 RFR	
TPA 0200SQ QC L_OUT, TPA 0250SQ QC L_OUT (See drawing on page: 5-268)					
050	484701-0000		10	SHUTTER	
060	1020146-0000		6	LOCKING BLOCK	
110	1279582-0000		2	RAIL	
120	1548550-0000		1	RAIL	
160	1285009-0000		2	HOLDER	
180	2724942-0000		1	RAIL	
190	1285253-0000		1	SPACER	
200	2732824-0000		1	RAIL	
220	3025643-0000		1	RAIL	
230	3019326-0000		1	BLOCK	
240	3019327-0000		1	BLOCK	
260	1366777-0101		2	ANGLED RAIL HOLDER TPC21	**5-275**
270	2523480-0000		1	SLIDE	
280	2804306-0000		1	BRACKET	
290	2804307-0000		1	BRACKET	
300	315105-0165		3	WASHER BRB 8,4X16 RFR	
310	312105-0449		3	SCREW M6S ISO 4017 M8X16 A480	
330	312105-0370		2	SCREW M6S ISO 4017 M6X20 A480	
335	312105-0372		1	SCREW M6S ISO 4017 M6X25 A480	
390	312605-0316		2	HEXAGON NUT, M6M M6 A280	
400	312105-0370		9	SCREW M6S ISO 4017 M6X20 A480	
445	315105-0153		15	WASHER BRB 6,4X12 RFR	
460	2693459-0000		1	BRACKET	
480	315125-0153		1	WASHER TBRSB 6,4X22X4 A4	
490	312705-0316		1	NUT HEX. DOMED CAP MHM-6 M6 A280	
TPA 0200SQ QC R_OUT, TPA 0250SQ QC R_OUT (See drawing on page: 5-270)					
050	484701-0000		10	SHUTTER	
060	1020146-0000		6	LOCKING BLOCK	
110	1279582-0000		2	RAIL	
120	2640723-0000		1	RAIL	
160	1285009-0000		2	HOLDER	
180	2926120-0000		1	RAIL	
190	1285253-0000		2	SPACER	
200	2914994-0000		1	RAIL	
220	3025641-0000		1	RAIL	
230	3019326-0000		1	BLOCK	
240	3019327-0000		1	BLOCK	
260	1366777-0101		2	ANGLED RAIL HOLDER TPC21	**5-275**
270	2523480-0000		1	SLIDE	
280	2926124-0000		1	BRACKET	
290	2926123-0000		1	BRACKET	
300	315105-0165		3	WASHER BRB 8,4X16 RFR	
310	312105-0449		3	SCREW M6S ISO 4017 M8X16 A480	
330	312105-0370		2	SCREW M6S ISO 4017 M6X20 A480	
335	312105-0372		1	SCREW M6S ISO 4017 M6X25 A480	
350	312105-0368		4	SCREW M6S ISO 4017 M6X16 A480	
390	312605-0316		2	HEXAGON NUT, M6M M6 A280	
400	312105-0370		9	SCREW M6S ISO 4017 M6X20 A480	
445	315105-0153		15	WASHER BRB 6,4X12 RFR	
460	2926122-0000		1	BRACKET	
480	315125-0153		3	WASHER TBRSB 6,4X22X4 A4	
490	312705-0316		1	NUT HEX. DOMED CAP MHM-6 M6 A280	
TPA 0330SQ L_OUT (See drawing on page: 5-258)					
050	484701-0000		10	SHUTTER	
060	1020146-0000		6	LOCKING BLOCK	
110	1279582-0000		2	RAIL	
120	1296079-0000		1	RAIL	
160	1285009-0000		2	HOLDER	
180	2724948-0000		1	RAIL	
190	1285253-0000		3	SPACER	
200	2693461-0000		1	RAIL	
210	3022600-0000		1	GUIDE	

Machine Type Group Description Used-In Group Number Page No

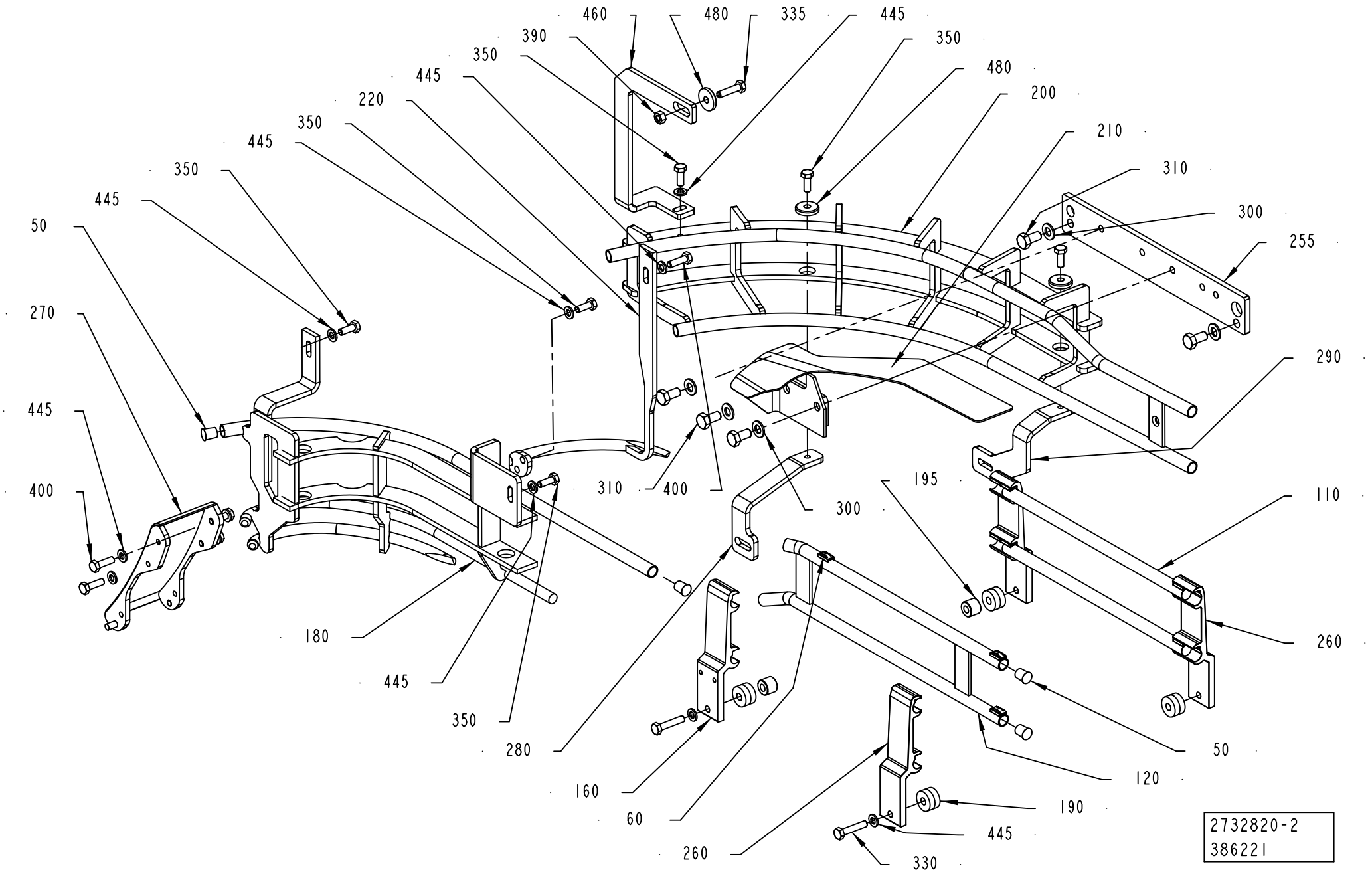
460
480
335
445
390
350
350
480
445
200
220
210
350
310
445
300
350
255
445
50
270
290
445
400
310
400
300
195
110
180
260
445
350
280
50
120
160
190
60
445
260
330
2732820-2
386221

ECM: 998084 - 20090701
Group number: 2732820-0100
Assembly Drawing: 2732820-2_1_AC

This list covers pages from 5-258 to 5-271

Pos	Part No	UN	Qty	Description	Page No
TPA 0330SQ L_OUT (Cont'd) (See drawing on page: 5-258)					
220	2724947-0000		1	RAIL	
260	1366777-0101		2	ANGLED RAIL HOLDER TPC21	**5-275**
270	2523480-0000		1	SLIDE	
280	2804294-0000		1	BRACKET	
290	2804295-0000		1	BRACKET	
300	315105-0165		5	WASHER BRB 8,4X16 RFR	
310	312105-0449		3	SCREW M6S ISO 4017 M8X16 A480	
330	312105-0370		2	SCREW M6S ISO 4017 M6X20 A480	
350	312105-0368		4	SCREW M6S ISO 4017 M6X16 A480	
390	312605-0316		1	HEXAGON NUT, M6M M6 A280	
400	312105-0370		9	SCREW M6S ISO 4017 M6X20 A480	
445	315105-0153		13	WASHER BRB 6,4X12 RFR	
460	2724934-0000		1	BRACKET	
TPA 0330SQ R_OUT (See drawing on page: 5-264)					
050	484701-0000		10	SHUTTER	
060	1020146-0000		6	LOCKING BLOCK	
110	1279582-0000		2	RAIL	
120	2914993-0000		1	RAIL	
160	1285009-0000		2	HOLDER	
180	2912160-0000		1	RAIL	
190	1285253-0000		3	SPACER	
200	2912159-0000		1	RAIL	
210	3022599-0000		1	GUIDE	
220	2912161-0000		1	RAIL	
260	1366777-0101		2	ANGLED RAIL HOLDER TPC21	**5-275**
270	2523480-0000		1	SLIDE	
280	2914990-0000		1	BRACKET	
290	2914991-0000		1	BRACKET	
300	315105-0165		5	WASHER BRB 8,4X16 RFR	
310	312105-0449		3	SCREW M6S ISO 4017 M8X16 A480	
330	312105-0370		2	SCREW M6S ISO 4017 M6X20 A480	
335	312105-0372		1	SCREW M6S ISO 4017 M6X25 A480	
350	312105-0368		4	SCREW M6S ISO 4017 M6X16 A480	
390	312605-0316		1	HEXAGON NUT, M6M M6 A280	
400	312105-0370		9	SCREW M6S ISO 4017 M6X20 A480	
445	315105-0153		13	WASHER BRB 6,4X12 RFR	
460	2912162-0000		1	BRACKET	
480	315125-0153		3	WASHER TBRSB 6,4X22X4 A4	
TPA 0500SQ (See drawing on page: 5-258)					
050	484701-0000		8	SHUTTER	
110	1279582-0000		2	RAIL	
120	1296079-0000		1	RAIL	
160	1334113-0000		2	HOLDER	
180	2724945-0000		1	RAIL	
190	1285253-0000		4	SPACER	
200	2715496-0000		1	RAIL	
220	2724946-0000		1	RAIL	
260	1366777-0101		2	ANGLED RAIL HOLDER TPC21	**5-275**
270	1538970-0000		1	SLIDE	
280	2804299-0000		1	BRACKET	
290	2804300-0000		1	BRACKET	
300	315105-0165		3	WASHER BRB 8,4X16 RFR	
310	312105-0449		3	SCREW M6S ISO 4017 M8X16 A480	
335	312105-0372		3	SCREW M6S ISO 4017 M6X25 A480	
350	312105-0368		3	SCREW M6S ISO 4017 M6X16 A480	
390	312605-0316		2	HEXAGON NUT, M6M M6 A280	
400	312105-0370		6	SCREW M6S ISO 4017 M6X20 A480	
445	315105-0153		14	WASHER BRB 6,4X12 RFR	
460	2715501-0000		1	BRACKET	
480	315125-0153		1	WASHER TBRSB 6,4X22X4 A4	
TPA 1000SQ NOQC (See drawing on page: 5-258)					
050	484701-0000		10	SHUTTER	
060	1020146-0000		6	LOCKING BLOCK	
110	1279582-0000		2	RAIL	
120	1548550-0000		1	RAIL	
160	1334113-0000		2	HOLDER	
180	2715503-0000		1	RAIL	
190	1285253-0000		2	SPACER	
195	1317218-0000		2	SPACER	
200	2687787-0000		1	RAIL	
210	1548348-0000		1	GUIDE	
220	2715504-0000		1	RAIL	
260	1366777-0101		2	ANGLED RAIL HOLDER TPC21	**5-275**
270	1538970-0000		1	SLIDE	
280	2804313-0000		1	BRACKET	
290	2804314-0000		1	BRACKET	
300	315105-0165		3	WASHER BRB 8,4X16 RFR	
310	312105-0449		3	SCREW M6S ISO 4017 M8X16 A480	
330	312105-0374		1	SCREW M6S ISO 4014 M6X30 A480	
335	312105-0372		1	SCREW M6S ISO 4017 M6X25 A480	
350	312105-0368		4	SCREW M6S ISO 4017 M6X16 A480	
390	312605-0316		6	HEXAGON NUT, M6M M6 A280	
400	312105-0370		5	SCREW M6S ISO 4017 M6X20 A480	

Machine Type | Group Description | Used-In | Group Number | Page No

RAIL OUT FEED

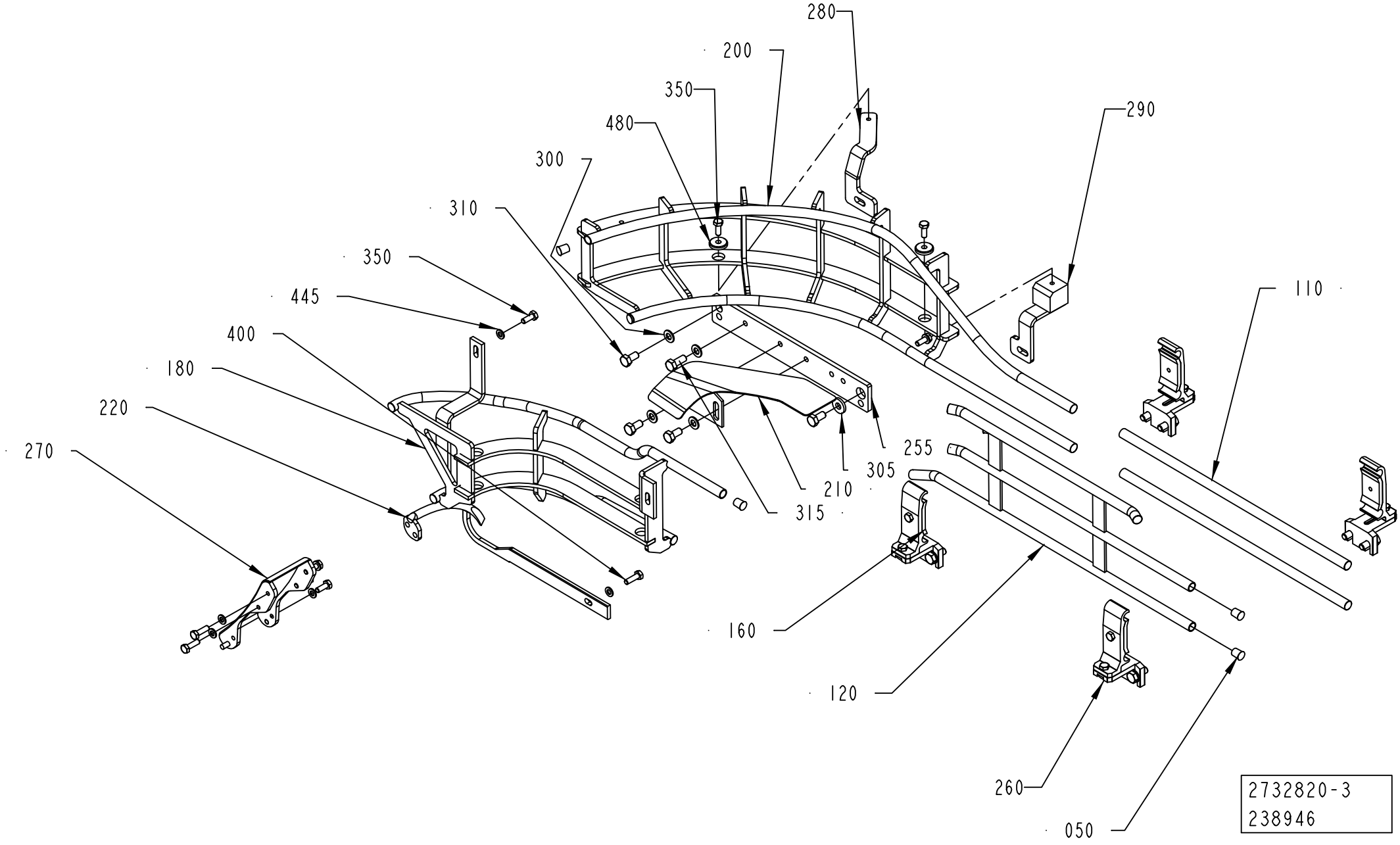

Pos	Part No	UN	Qty	Description	Page No
TPA 1000SQ NOQC (Cont'd) (See drawing on page: 5-258)					
410	1548551-0000		1	SPACER	
420	312155-0449		2	SCREW DIN 7991 MF6S M8X16 A4 70	
445	315105-0153		14	WASHER BRB 6,4X12 RFR	
460	2693460-0000		1	BRACKET	
480	315125-0153		1	WASHER TBRSB 6,4X22X4 A4	
TPA 1000SQ QC, TPA 0750SQ QC (See drawing on page: 5-266)					
050	484701-0000		10	SHUTTER	
060	1020146-0000		6	LOCKING BLOCK	
110	1279582-0000		2	RAIL	
120	1548550-0000		1	RAIL	
160	1334113-0000		2	HOLDER	
180	2752754-0000		1	RAIL	
190	1285253-0000		2	SPACER	
195	1317218-0000		2	SPACER	
200	2945065-0000		1	RAIL	
205	2945064-0000		1	FINGER	
210	1548348-0000		1	GUIDE	
220	2715504-0000		1	RAIL	
260	1366777-0101		2	ANGLED RAIL HOLDER TPC21	**5-275**
270	1538970-0000		1	SLIDE	
280	2804309-0000		1	BRACKET	
290	2804310-0000		1	BRACKET	
300	315105-0165		3	WASHER BRB 8,4X16 RFR	
310	312105-0449		3	SCREW M6S ISO 4017 M8X16 A480	
330	312105-0374		1	SCREW M6S ISO 4014 M6X30 A480	
335	312105-0372		2	SCREW M6S ISO 4017 M6X25 A480	
350	312105-0368		4	SCREW M6S ISO 4017 M6X16 A480	
390	312605-0316		6	HEXAGON NUT, M6M M6 A280	
400	312105-0370		5	SCREW M6S ISO 4017 M6X20 A480	
410	1548551-0000		1	SPACER	
420	312155-0449		2	SCREW DIN 7991 MF6S M8X16 A4 70	
445	315105-0153		14	WASHER BRB 6,4X12 RFR	
460	2532864-0000		1	BRACKET	
480	315125-0153		3	WASHER TBRSB 6,4X22X4 A4	
TBA 0200B QC, TBA 0330S QC, TBA 0250B QC (See drawing on page: 5-260)					
050	484701-0000		13	SHUTTER	
060	1020146-0000		10	LOCKING BLOCK	
110	1279582-0000		2	RAIL	
120	2558754-0000		1	RAIL	
160	1285009-0000		2	HOLDER	
180	2752760-0000		1	RAIL	
200	2732826-0000		1	RAIL	
210	2538110-0000		1	RAIL	
220	2732811-0000		1	RAIL	
260	1020142-0002		2	RAIL HOLDER, B55 WIDTH 30 MM	
270	2523480-0000		1	SLIDE	
280	2804308-0000		1	BRACKET	
290	2963362-0000		1	BRACKET	
300	315105-0165		5	WASHER BRB 8,4X16 RFR	
310	312105-0449		5	SCREW M6S ISO 4017 M8X16 A480	
330	312105-0370		2	SCREW M6S ISO 4017 M6X20 A480	
350	312105-0368		4	SCREW M6S ISO 4017 M6X16 A480	
390	312605-0316		1	HEXAGON NUT, M6M M6 A280	
400	312105-0370		5	SCREW M6S ISO 4017 M6X20 A480	
445	315105-0153		13	WASHER BRB 6,4X12 RFR	
460	2732827-0000		1	BRACKET	
TBA 0200M, TBA 0250S (See drawing on page: 5-260)					
050	484701-0000		13	SHUTTER	
060	1020146-0000		10	LOCKING BLOCK	
110	1279582-0000		2	RAIL	
120	2558754-0000		1	RAIL	
160	1285009-0000		2	HOLDER	
180	2732812-0000		1	RAIL	
200	2715495-0000		1	RAIL	
210	2538110-0000		1	RAIL	
220	2732811-0000		1	RAIL	
260	1020142-0002		2	RAIL HOLDER, B55 WIDTH 30 MM	
270	2523480-0000		1	SLIDE	
280	2804303-0000		1	BRACKET	
290	2963366-0000		1	BRACKET	
300	315105-0165		5	WASHER BRB 8,4X16 RFR	
330	312105-0370		2	SCREW M6S ISO 4017 M6X20 A480	
350	312105-0368		4	SCREW M6S ISO 4017 M6X16 A480	
390	312605-0316		1	HEXAGON NUT, M6M M6 A280	
400	312105-0370		5	SCREW M6S ISO 4017 M6X20 A480	
445	315105-0153		13	WASHER BRB 6,4X12 RFR	
460	2732814-0000		1	BRACKET	
TBA 0200S (See drawing on page: 5-260)					
050	484701-0000		14	SHUTTER	
060	1020146-0000		10	LOCKING BLOCK	
110	1279582-0000		2	RAIL	
120	2895557-0000		1	RAIL	
160	1285009-0000		2	HOLDER	

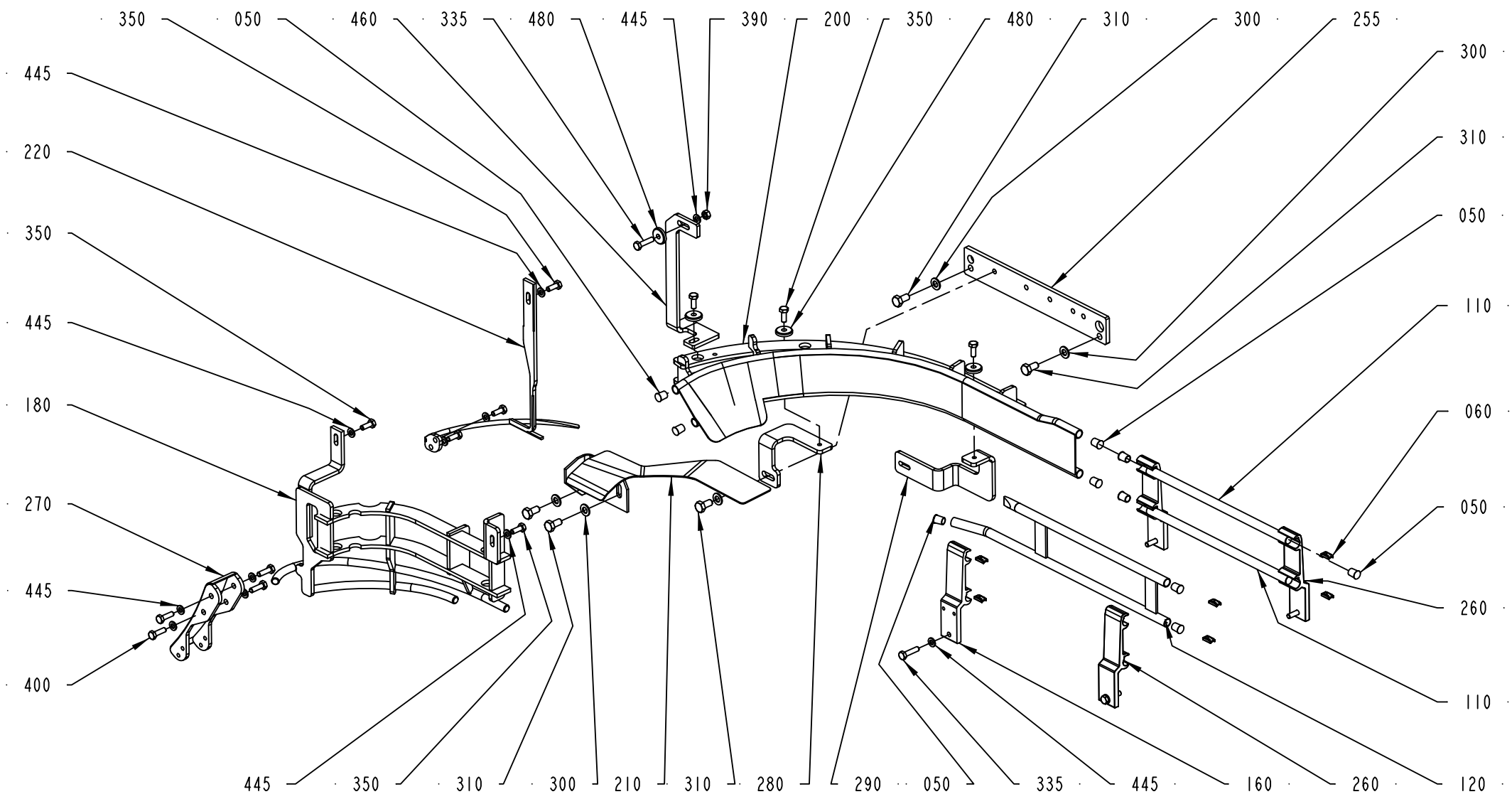

2732820-5
273163

Pos	Part No	UN	Qty	Description	Page No
TBA 0200S (Cont'd) (See drawing on page: 5-260)					
180	2732812-0000		1	RAIL	
200	2715497-0000		1	RAIL	
210	2538110-0000		1	RAIL	
220	2732811-0000		1	RAIL	
260	1020142-0002		2	RAIL HOLDER, B55 WIDTH 30 MM	
270	2523480-0000		1	SLIDE	
280	2804301-0000		1	BRACKET	
290	2804302-0000		1	BRACKET	
300	315105-0165		5	WASHER BRB 8,4X16 RFR	
310	312105-0449		5	SCREW M6S ISO 4017 M8X16 A480	
330	312105-0370		2	SCREW M6S ISO 4017 M6X20 A480	
350	312105-0368		4	SCREW M6S ISO 4017 M6X16 A480	
390	312605-0316		1	HEXAGON NUT, M6M M6 A280	
400	312105-0370		5	SCREW M6S ISO 4017 M6X20 A480	
445	315105-0153		13	WASHER BRB 6,4X12 RFR	
TBA 0200SQ QC, TBA 0250SQ QC (See drawing on page: 5-258)					
050	484701-0000		10	SHUTTER	
060	1020146-0000		6	LOCKING BLOCK	
110	1279582-0000		2	RAIL	
120	1548550-0000		1	RAIL	
160	1285009-0000		2	HOLDER	
180	2752758-0000		1	RAIL	
190	315105-0153		2	WASHER BRB 6,4X12 RFR	
195	315105-0153		2	WASHER BRB 6,4X12 RFR	
200	2752756-0000		1	RAIL	
220	3025637-0000		1	RAIL	
260	1285009-0000		2	HOLDER	
270	2523480-0000		1	SLIDE	
280	2804311-0000		1	BRACKET	
290	2804312-0000		1	BRACKET	
300	315105-0165		3	WASHER BRB 8,4X16 RFR	
310	312105-0449		3	SCREW M6S ISO 4017 M8X16 A480	
330	312105-0370		2	SCREW M6S ISO 4017 M6X20 A480	
390	312605-0316		1	HEXAGON NUT, M6M M6 A280	
400	312105-0370		5	SCREW M6S ISO 4017 M6X20 A480	
445	315105-0153		13	WASHER BRB 6,4X12 RFR	
460	2752759-0000		1	BRACKET	
TBA 0500B QC, TBA 1000B QC (See drawing on page: 5-260)					
050	484701-0000		14	SHUTTER	
060	1020146-0000		10	LOCKING BLOCK	
110	1279582-0000		2	RAIL	
120	1487684-0000		1	RAIL	
160	1285009-0000		2	HOLDER	
180	2724944-0000		1	RAIL	
190	1285253-0000		8	SPACER	
200	2693463-0000		1	RAIL	
210	2836001-0000		1	GUIDE	
220	2724951-0000		1	RAIL	
260	1020142-0002		2	RAIL HOLDER, B55 WIDTH 30 MM	
270	1538970-0000		1	SLIDE	
280	2804298-0000		1	BRACKET	
290	2963364-0000		1	BRACKET	
300	315105-0165		5	WASHER BRB 8,4X16 RFR	
310	312105-0449		5	SCREW M6S ISO 4017 M8X16 A480	
330	312105-0374		2	SCREW M6S ISO 4014 M6X30 A480	
350	312105-0368		4	SCREW M6S ISO 4017 M6X16 A480	
360	312155-0329		1	SCREW DIN 7991 MF6S M5X16 A4 70	
370	315105-0146		1	WASHER BRB 5,3X10 RFR	
380	312605-0314		1	HEXAGON NUT, M6M M5 A280	
390	312605-0316		1	HEXAGON NUT, M6M M6 A280	
400	312105-0370		5	SCREW M6S ISO 4017 M6X20 A480	
445	315105-0153		14	WASHER BRB 6,4X12 RFR	
460	2732810-0000		1	BRACKET	
TBA 0500S (See drawing on page: 5-260)					
050	484701-0000		10	SHUTTER	
060	1020146-0000		10	LOCKING BLOCK	
110	1279582-0000		2	RAIL	
120	1487684-0000		1	RAIL	
160	1285009-0000		2	HOLDER	
180	2732821-0000		1	RAIL	
200	2732819-0000		1	RAIL	
210	2836001-0000		1	GUIDE	
220	2724951-0000		1	RAIL	
260	1020142-0002		2	RAIL HOLDER, B55 WIDTH 30 MM	
270	1538970-0000		1	SLIDE	
280	2804304-0000		1	BRACKET	
290	2804305-0000		1	BRACKET	
300	315105-0165		5	WASHER BRB 8,4X16 RFR	
310	312105-0449		5	SCREW M6S ISO 4017 M8X16 A480	
330	312105-0370		2	SCREW M6S ISO 4017 M6X20 A480	
350	312105-0368		4	SCREW M6S ISO 4017 M6X16 A480	
390	312605-0316		1	HEXAGON NUT, M6M M6 A280	
400	312105-0370		9	SCREW M6S ISO 4017 M6X20 A480	

RAIL OUT FEED

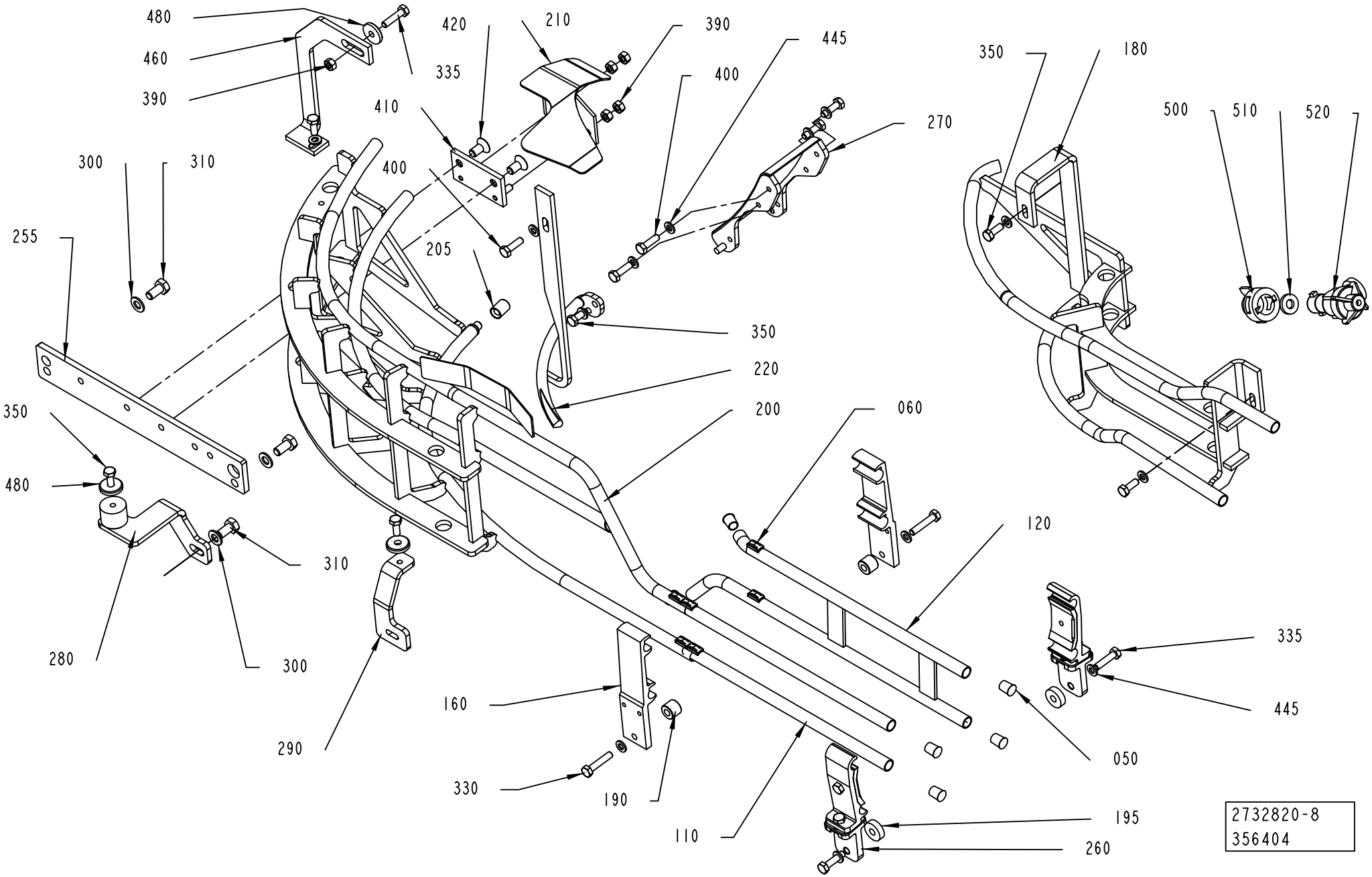

ECM: 998084 - 20090701
Group number: 2732820-0100
Assembly Drawing: 2732820-8_1_AA

This list covers pages from 5-258 to 5-271

Pos	Part No	UN	Qty	Description	Page No
TBA 0500S (Cont'd) (See drawing on page: 5-260)					
445	315105-0153		13	WASHER BRB 6,4X12 RFR	
460	2732822-0000		1	BRACKET	
TBA 0500SQ QC, TBA 1000SQ QC (See drawing on page: 5-258)					
050	484701-0000		14	SHUTTER	
060	1020146-0000		10	LOCKING BLOCK	
110	1279582-0000		2	RAIL	
120	1296079-0000		1	RAIL	
160	1285009-0000		2	HOLDER	
180	2715500-0000		1	RAIL	
190	1285253-0000		8	SPACER	
200	2851593-0000		1	RAIL	
210	2836002-0000		1	GUIDE	
220	2854110-0000		1	RAIL	
260	1020142-0002		2	RAIL HOLDER, B55 WIDTH 30 MM	
270	1538970-0000		1	SLIDE	
280	2804288-0000		1	BRACKET	
290	2804289-0000		1	BRACKET	
300	315105-0165		5	WASHER BRB 8,4X16 RFR	
310	312105-0449		5	SCREW M6S ISO 4017 M8X16 A480	
330	312105-0374		2	SCREW M6S ISO 4014 M6X30 A480	
350	312105-0368		4	SCREW M6S ISO 4017 M6X16 A480	
390	312605-0316		1	HEXAGON NUT, M6M M6 A280	
400	312105-0370		5	SCREW M6S ISO 4017 M6X20 A480	
445	315105-0153		13	WASHER BRB 6,4X12 RFR	
460	2732815-0000		1	BRACKET	
TBA 1000S, TBA 1000B NOQC (See drawing on page: 5-260)					
050	484701-0000		14	SHUTTER	
060	1020146-0000		10	LOCKING BLOCK	
110	1279582-0000		2	RAIL	
120	1487684-0000		1	RAIL	
160	1285009-0000		2	HOLDER	
180	2724944-0000		1	RAIL	
190	1285253-0000		8	SPACER	
200	2693462-0000		1	RAIL	
210	2836001-0000		1	GUIDE	
220	2724951-0000		1	RAIL	
260	1020142-0002		2	RAIL HOLDER, B55 WIDTH 30 MM	
270	1538970-0000		1	SLIDE	
280	2804290-0000		1	BRACKET	
290	2804291-0000		1	BRACKET	
300	315105-0165		5	WASHER BRB 8,4X16 RFR	
310	312105-0449		5	SCREW M6S ISO 4017 M8X16 A480	
330	312105-0374		2	SCREW M6S ISO 4014 M6X30 A480	
350	312105-0368		4	SCREW M6S ISO 4017 M6X16 A480	
360	312155-0329		1	SCREW DIN 7991 MF6S M5X16 A4 70	
370	315105-0146		1	WASHER BRB 5,3X10 RFR	
380	312605-0314		1	HEXAGON NUT, M6M M5 A280	
390	312605-0316		1	HEXAGON NUT, M6M M6 A280	
400	312105-0370		5	SCREW M6S ISO 4017 M6X20 A480	
445	315105-0153		14	WASHER BRB 6,4X12 RFR	
460	2732810-0000		1	BRACKET	
TBA 1000SQ NOQC (See drawing on page: 5-258)					
050	484701-0000		14	SHUTTER	
060	1020146-0000		10	LOCKING BLOCK	
110	1279582-0000		2	RAIL	
120	1296079-0000		1	RAIL	
160	1285009-0000		2	HOLDER	
180	2715500-0000		1	RAIL	
200	2693457-0000		1	RAIL	
210	2836002-0000		1	GUIDE	
220	2715498-0000		1	RAIL	
260	1020142-0002		2	RAIL HOLDER, B55 WIDTH 30 MM	
270	1538970-0000		1	SLIDE	
280	2804288-0000		1	BRACKET	
290	2804289-0000		1	BRACKET	
300	315105-0165		5	WASHER BRB 8,4X16 RFR	
310	312105-0449		5	SCREW M6S ISO 4017 M8X16 A480	
330	312105-0374		2	SCREW M6S ISO 4014 M6X30 A480	
350	312105-0368		4	SCREW M6S ISO 4017 M6X16 A480	
390	312605-0316		1	HEXAGON NUT, M6M M6 A280	
400	312105-0370		5	SCREW M6S ISO 4017 M6X20 A480	
445	315105-0153		13	WASHER BRB 6,4X12 RFR	
460	2732815-0000		1	BRACKET	
TBA 1400B (See drawing on page: 5-262)					
050	484701-0000		18	SHUTTER	
110	2640076-0000		2	RAIL	
120	2639832-0000		1	RAIL	
160	1550743-0100		2	RAIL HOLDER	**5-273**
180	2724940-0000		1	RAIL	
200	2693462-0000		1	RAIL	
210	2652206-0000		1	GUIDE	
220	2724941-0000		1	RAIL	
260	1550743-0100		2	RAIL HOLDER	**5-273**

Machine Type | Group Description | Used-In | Group Number | Page No

RAIL OUT FEED

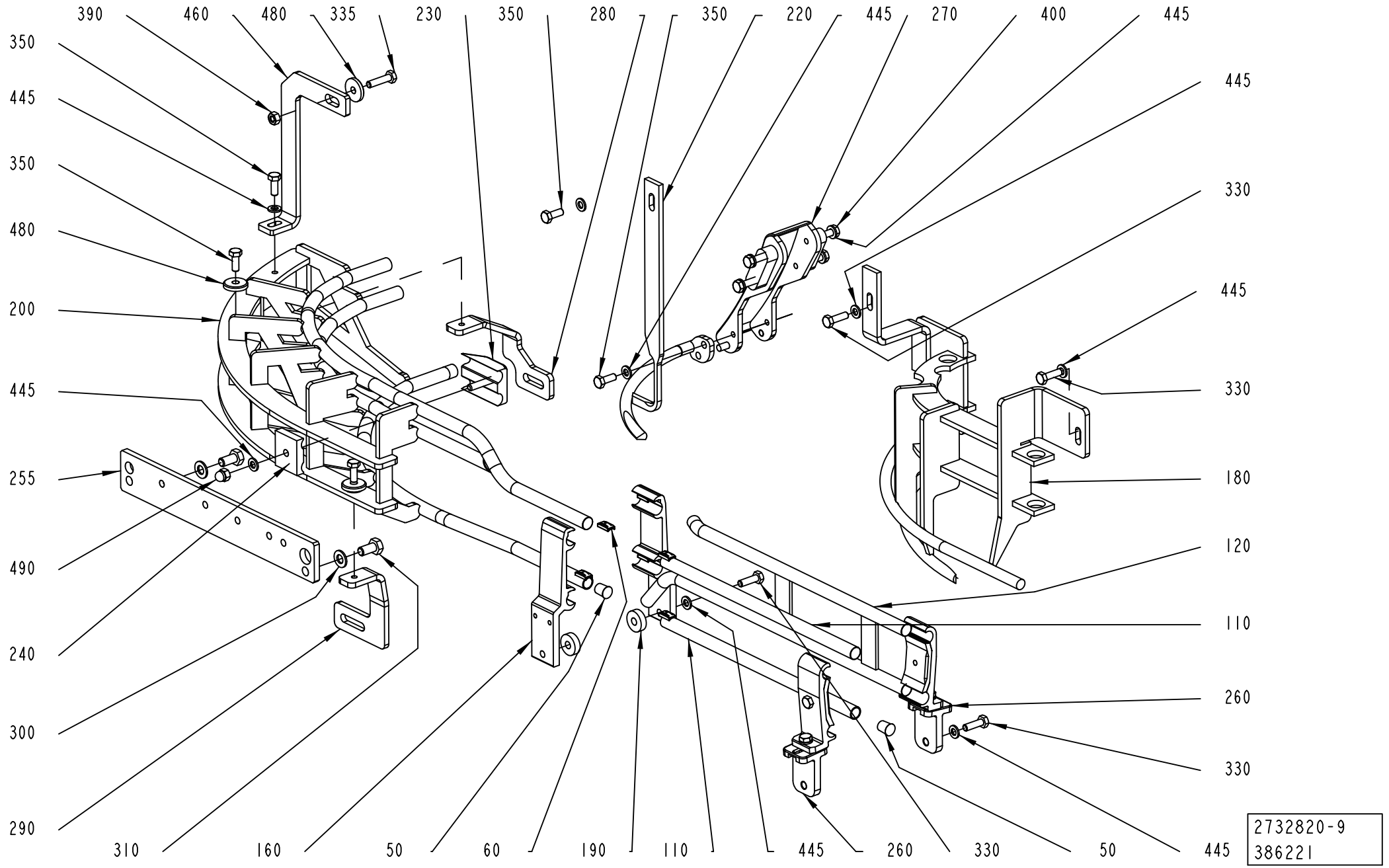

Pos	Part No	UN	Qty	Description	Page No
TBA 1400B (Cont'd) (See drawing on page: 5-262)					
270	1538970-0000		1	SLIDE	
280	2805214-0000		1	BRACKET	
290	2805215-0000		1	BRACKET	
300	315105-0165		4	WASHER BRB 8,4X16 RFR	
305	2655500-0000		1	WASHER	
310	312105-0449		4	SCREW M6S ISO 4017 M8X16 A480	
315	312105-0451		1	SCREW M6S ISO 4017 M8X20 A480	
330	312105-0374		2	SCREW M6S ISO 4014 M6X30 A480	
350	312105-0368		3	SCREW M6S ISO 4017 M6X16 A480	
390	312605-0316		1	HEXAGON NUT, M6M M6 A280	
400	312105-0370		5	SCREW M6S ISO 4017 M6X20 A480	
445	315105-0153		9	WASHER BRB 6,4X12 RFR	
480	315125-0153		1	WASHER TBRSB 6,4X22X4 A4	
TBA 1500S (See drawing on page: 5-260)					
050	484701-0000		16	SHUTTER	
060	1020146-0000		10	LOCKING BLOCK	
110	1279582-0000		2	RAIL	
120	1487684-0000		1	RAIL	
160	1285009-0000		2	HOLDER	
180	2724949-0000		1	RAIL	
190	1317218-0000		5	SPACER	
200	2693462-0000		1	RAIL	
210	2836001-0000		1	GUIDE	
220	2724950-0000		1	RAIL	
260	1020142-0002		2	RAIL HOLDER, B55 WIDTH 30 MM	
270	1538970-0000		1	SLIDE	
280	2804290-0000		1	BRACKET	
290	2804291-0000		1	BRACKET	
300	315105-0165		5	WASHER BRB 8,4X16 RFR	
310	312105-0449		5	SCREW M6S ISO 4017 M8X16 A480	
330	312105-0374		2	SCREW M6S ISO 4014 M6X30 A480	
350	312105-0368		4	SCREW M6S ISO 4017 M6X16 A480	
360	312155-0329		1	SCREW DIN 7991 MF6S M5X16 A4 70	
370	315105-0146		1	WASHER BRB 5,3X10 RFR	
380	312605-0314		1	HEXAGON NUT, M6M M5 A280	
390	312605-0316		1	HEXAGON NUT, M6M M6 A280	
400	312105-0370		5	SCREW M6S ISO 4017 M6X20 A480	
445	315105-0153		14	WASHER BRB 6,4X12 RFR	
460	2724936-0000		1	BRACKET	
Common Parts					
255	1478235-0000		1	PLATE	

Pos	Part No	UN	Qty	Description	Page No

Machine Type Group Description Used-In Group Number Page No

RAIL OUT FEED

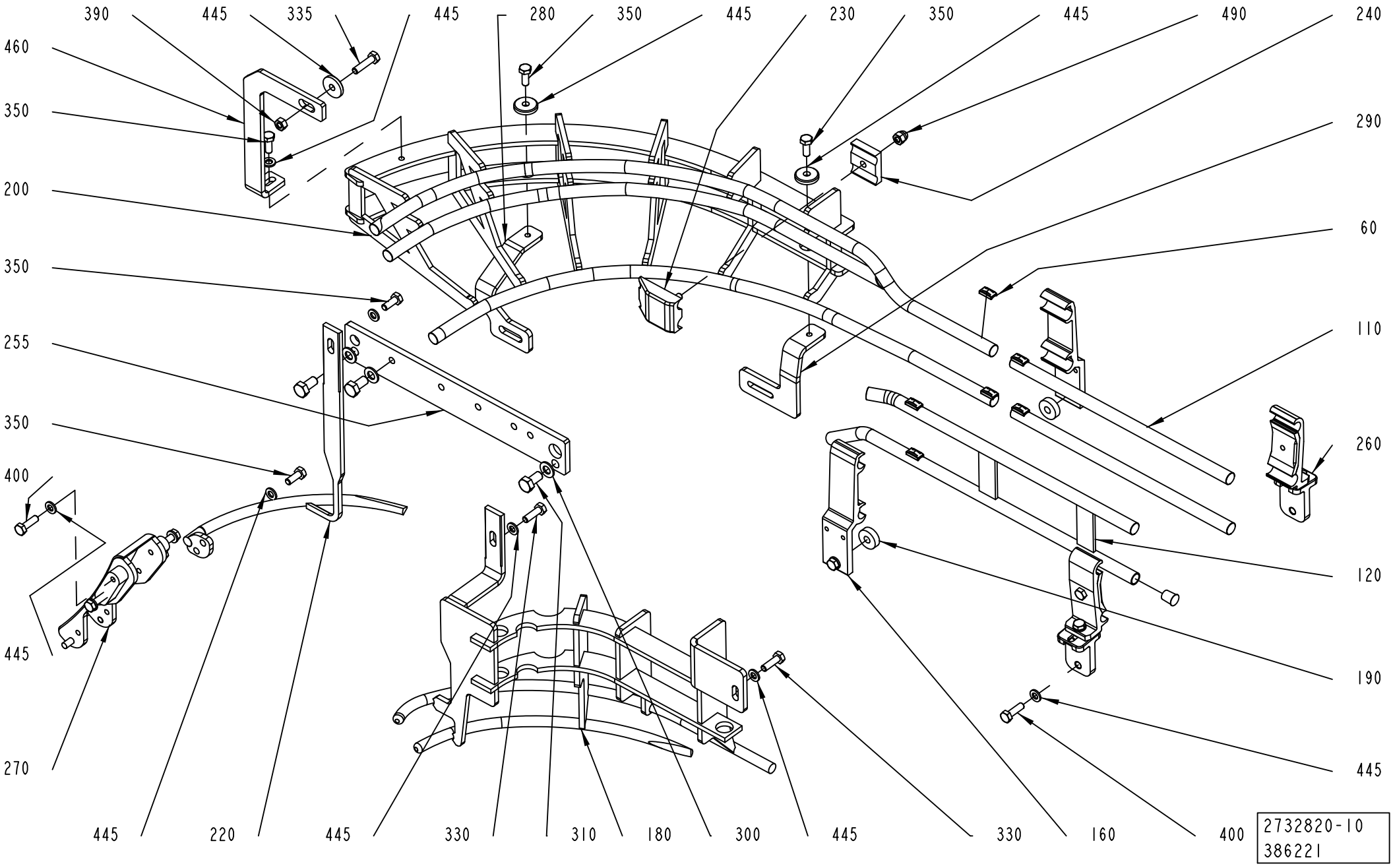

Pos	Part No	UN	Qty	Description	Page No	Pos	Part No	UN	Qty	Description	Page No

SEE PREVIOUS LISTS PAGES: 5-259, 5-261, 5-263, 5-265, 5-267, 5-269.

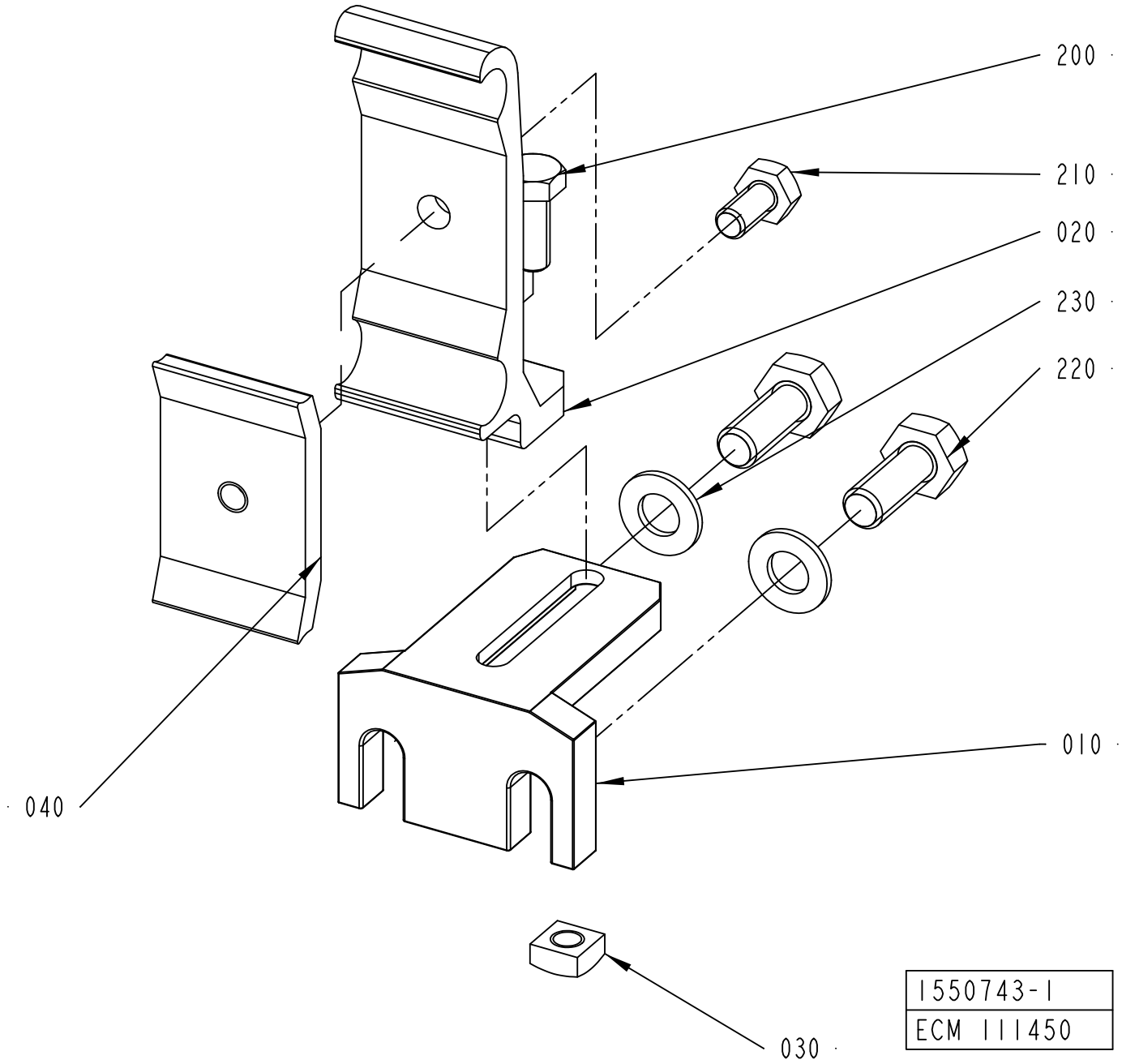
200
210
020
230
220
040
010
030
1550743-1
ECM 111450

ECM: 129860 - 20031113
Group number: 1550743-0100
Assembly Drawing: 1550743-1_1_AB

Pos	Part No	UN	Qty	Description	Page No
-					
010	1550772-0000		1	HOLDER	
020	1550773-0000		1	RAIL HOLDER	
030	1359565-0000		1	NUT	
040	1366727-0000		1	CLAMP	
200	312105-0368		1	SCREW M6S ISO 4017 M6X16 A480	
210	312105-0366		1	SCREW M6S ISO 4017 M6X12 A480	
220	312105-0451		2	SCREW M6S ISO 4017 M8X20 A480	
230	315105-0165		2	WASHER BRB 8,4X16 RFR	

Pos	Part No	UN	Qty	Description	Page No

ANGLED RAIL HOLDER TPC21

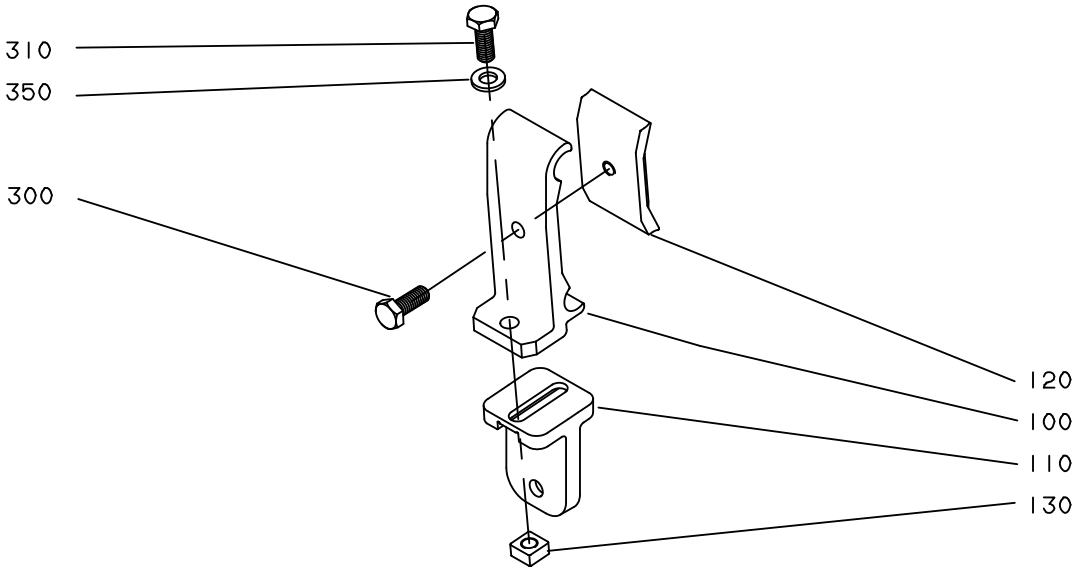

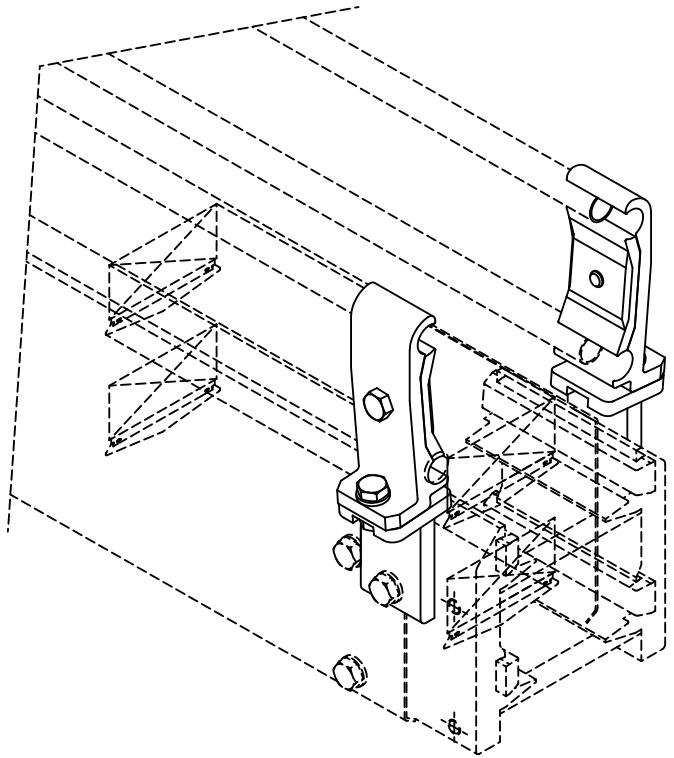

S-1366777-1
ECN 81455

ECM: 189515 - 20041104
Group number: 1366777-0101
Assembly Drawing: 1366777-1_1_AA

Pos	Part No	UN	Qty	Description	Page No
-					
100	1366726-0000		1	HOLDER	
110	1359085-0000		1	T-HOLDER	
120	1366727-0000		1	CLAMP	
130	1359565-0000		1	NUT	
300	312105-0366		1	SCREW M6S ISO 4017 M6X12 A480	
310	312105-0368		1	SCREW M6S ISO 4017 M6X16 A480	
350	315105-0153		1	WASHER BRB 6,4X12 RFR	

Pos	Part No	UN	Qty	Description	Page No

INFEED/OUTFEED CONVEYOR

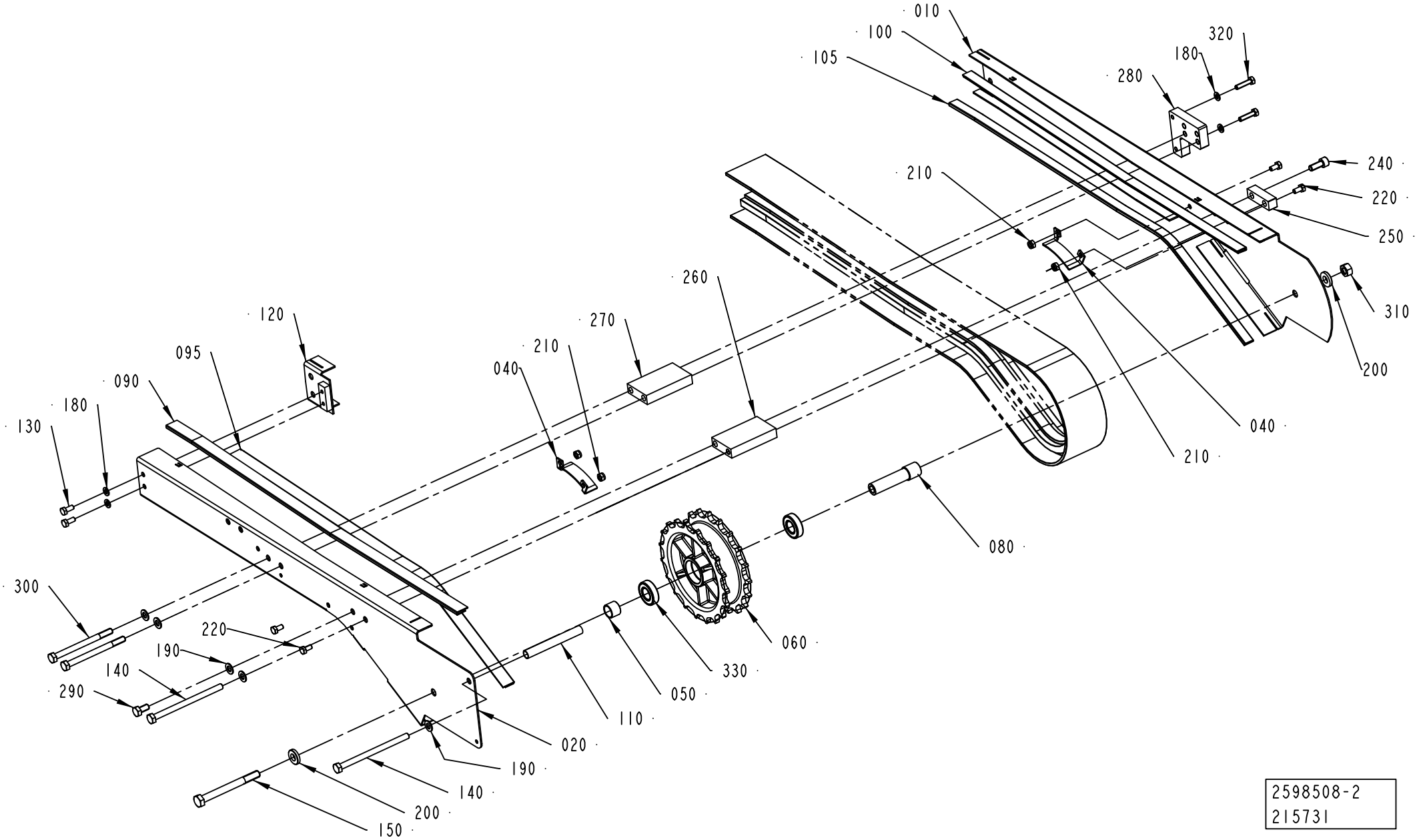

2598508-2
215731

ECM: 316407 - 20080103
Group number: 2598508-0100
Assembly Drawing: 2598508-2_1_AC

Pos	Part No	UN	Qty	Description	Page No
-					
010	2699107-0000		1	SIDE PLATE	
020	2699106-0000		1	SIDE PLATE	
040	2652311-0000		2	PLATE	
050	2699109-0000		1	SPACER	
060	2656672-0000		1	SPROCKET	
080	2699108-0000		1	SHAFT	
090	1550595-6700		1	SLIDING STRIP	
095	1550595-6700		1	SLIDING STRIP	
100	1550595-7110		1	SLIDING STRIP	
105	1550595-7110		1	SLIDING STRIP	
110	2598513-0000		1	SPACER	
120	2598514-0000		1	COVER	
130	312105-0367		2	SCREW M6S ISO 4017 M6X14 A480	
140	312105-0475		2	SCREW M6S ISO 4014 M8X120 A480	
150	312105-0511		1	SCREW M6S ISO 4014 M10X100 A480	
180	315105-0153		4	WASHER BRB 6,4X12 RFR	
190	315105-0165		5	WASHER BRB 8,4X16 RFR	
200	315111-0173		2	WASHER PLAIN, TBRB 10,5/22 H=4	
210	312812-0316		4	HEXAGON NUT, NY-LOCK M6 A480	
220	312105-0366		4	SCREW M6S ISO 4017 M6X12 A480	
240	312115-0451		1	SCREW ISO4762 M8X20 A4 80	
250	2619210-0000		1	SPACER	
260	2619211-0000		1	SPACER	
270	2619212-0000		1	SPACER	
280	2619213-0000		1	SPACER	
290	312105-0449		1	SCREW M6S ISO 4017 M8X16 A480	
300	312105-0471		2	SCREW M6S ISO 4014 M8X100 A480	
310	312605-0320		1	HEXAGON NUT, M6M M10 A280	
320	312105-0372		2	SCREW M6S ISO 4017 M6X25 A480	
330	1550348-0001		2	BEARING	

Pos	Part No	UN	Qty	Description	Page No

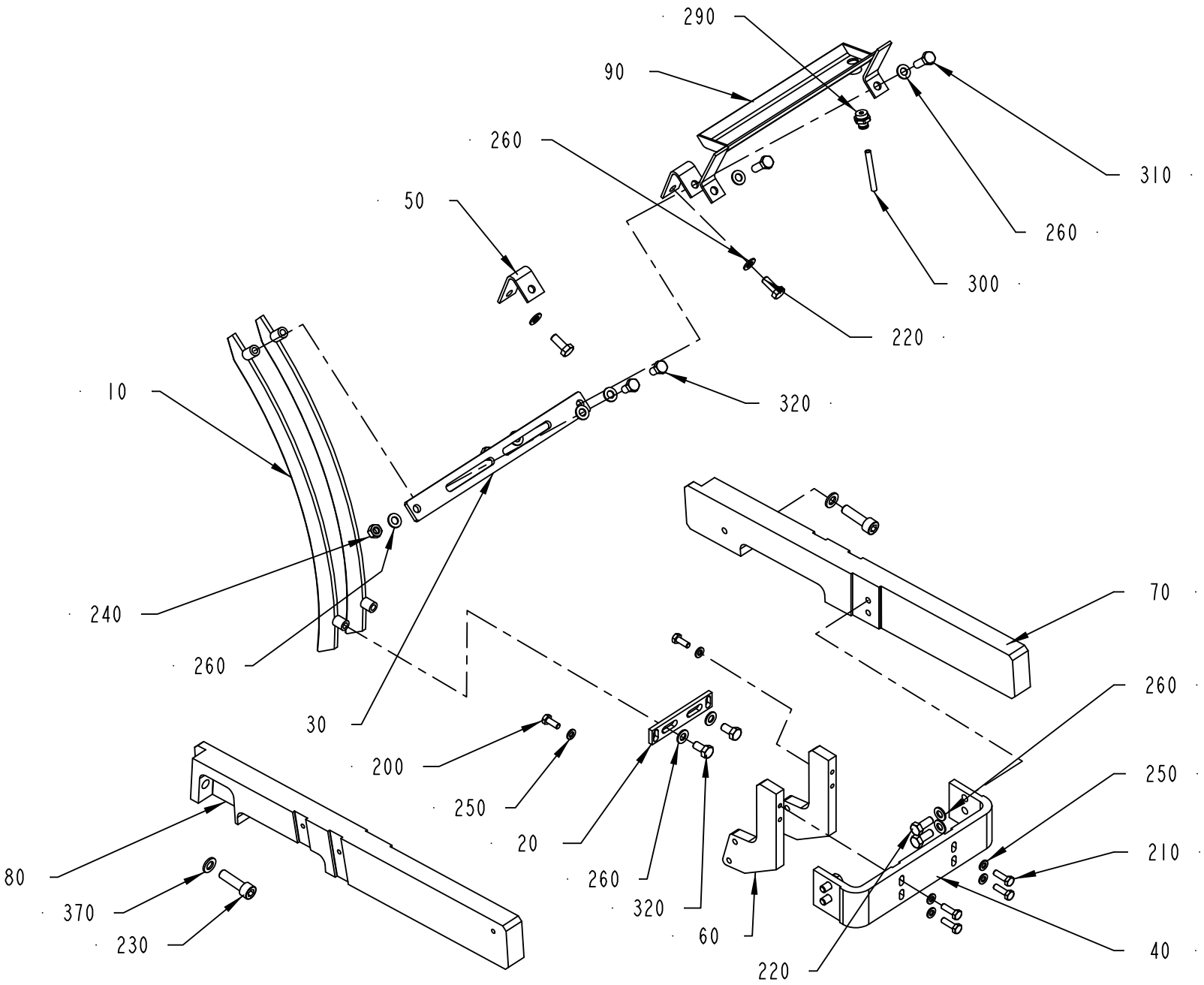

2732825-2
238946

ECM: 369019 - 20090101
Group number: 2732825-0100
Assembly Drawing: 2732825-2_1_AA

This list covers pages from 5-278 to 5-281

Pos	Part No	UN	Qty	Description	Page No
TBA 0200M, TBA 0200B, TBA 0200SQ, TBA 0200S, TBA 0250S, TBA 0250B, TBA 0330S, TBA 0500S, TBA 0500SQ, TBA 0500B, TBA 1000B, TBA 1000SQ, TBA 1000S, TPA 0330SQ, TPA 0250SQ, TPA 0200SQ, TBA 0250SQ (See drawing on page: 5-278)					
010	1558941-0000		2	RAIL	
050	1144899-0000		2	SUPPORT	
070	2724937-0000		1	SUPPORTING ARM	
080	2875856-0000		1	SUPPORTING ARM	
090	1478127-0000		1	DRIP PLATE	
220	312105-0451		6	SCREW M6S ISO 4017 M8X20 A480	
240	312605-0318		2	HEXAGON NUT, M6M M8 A280	
260	315105-0165		14	WASHER BRB 8,4X16 RFR	
310	312105-0453		2	SCREW M6S ISO 4017 M8X25 A480	
320	312105-0449		4	SCREW M6S ISO 4017 M8X16 A480	
TBA 1500S, TPA 1000SQ, TBA 1890S, TBA 2000S, TPA 0750SQ, TBA 1400B (See drawing on page: 5-280)					
010	1538963-0000		2	RAIL	
070	2724952-0000		1	SUPPORTING ARM	
080	2715502-0000		1	SUPPORTING ARM	
090	1346588-0000		1	DRIP PLATE	
220	312105-0451		10	SCREW M6S ISO 4017 M8X20 A480	
240	312605-0318		2	HEXAGON NUT, M6M M8 A280	
260	315105-0165		14	WASHER BRB 8,4X16 RFR	
320	312105-0449		2	SCREW M6S ISO 4017 M8X16 A480	
TPA 0500SQ (See drawing on page: 5-278)					
010	1558941-0000		2	RAIL	
050	1144899-0000		2	SUPPORT	
070	2724937-0000		1	SUPPORTING ARM	
080	2875856-0000		1	SUPPORTING ARM	
090	1478127-0000		1	DRIP PLATE	
220	312105-0451		5	SCREW M6S ISO 4017 M8X20 A480	
240	312605-0318		1	HEXAGON NUT, M6M M8 A280	
260	315105-0165		12	WASHER BRB 8,4X16 RFR	
310	312105-0453		2	SCREW M6S ISO 4017 M8X25 A480	
320	312105-0449		4	SCREW M6S ISO 4017 M8X16 A480	
Common Parts					
020	1517567-0000		1	PLATE	
030	1144552-0000		1	PLATE	
040	1517563-0000		1	BRACKET	
060	1517302-0000		2	SUPPORT PLATE	
200	312105-0368		2	SCREW M6S ISO 4017 M6X16 A480	
210	312105-0370		4	SCREW M6S ISO 4017 M6X20 A480	
230	312115-0497		2	SCREW ISO4762 M10X35 A4 80	
250	315105-0153		6	WASHER BRB 6,4X12 RFR	
270	315105-0171		2	WASHER BRB 10X18 RFR	
290	342722-0203		1	STRAIGHT COUPLING	
300	90166-0132	MM	2000	TUBE 6 MM PA,TRANSP.	

Machine Type | Group Description | Used-In | Group Number | Page No

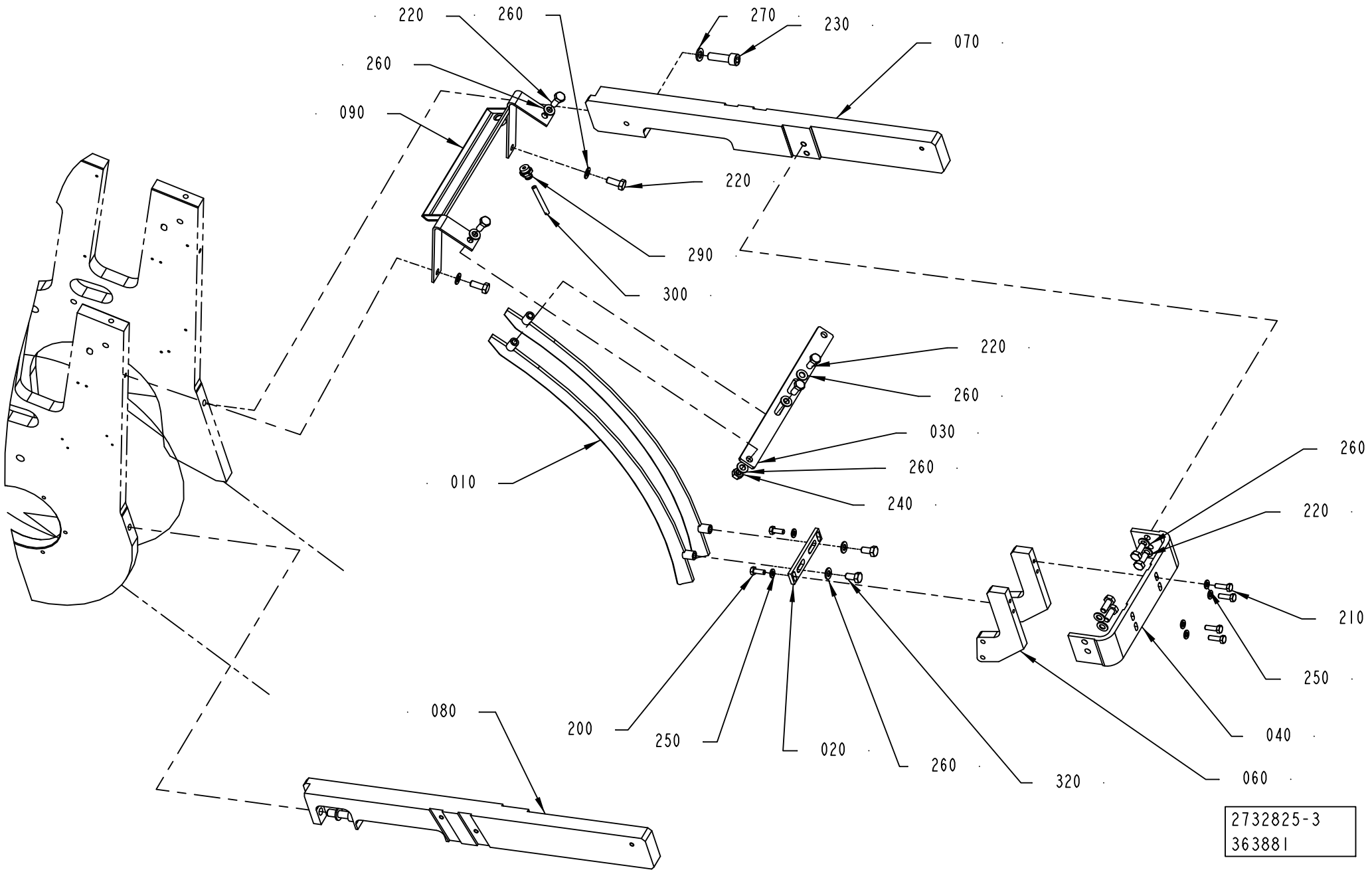
220
260
270
230
070
260
090
220
290
300
220
260
030
260
240
010
260
220
210
250
040
080
200
250
020
260
320
060
2732825-3
363881

ECM: 369019 - 20090101
Group number: 2732825-0100
Assembly Drawing: 2732825-3_1_AA

This list covers pages from 5-278 to 5-281

Pos	Part No	UN	Qty	Description	Page No
TBA 0200M, TBA 0200B, TBA 0200SQ, TBA 0200S, TBA 0250S, TBA 0250B, TBA 0330S, TBA 0500S, TBA 0500SQ, TBA 0500B, TBA 1000B, TBA 1000SQ, TBA 1000S, TPA 0330SQ, TPA 0250SQ, TPA 0200SQ, TBA 0250SQ (See drawing on page: 5-278)					
010	1558941-0000		2	RAIL	
050	1144899-0000		2	SUPPORT	
070	2724937-0000		1	SUPPORTING ARM	
080	2875856-0000		1	SUPPORTING ARM	
090	1478127-0000		1	DRIP PLATE	
220	312105-0451		6	SCREW M6S ISO 4017 M8X20 A480	
240	312605-0318		2	HEXAGON NUT, M6M M8 A280	
260	315105-0165		14	WASHER BRB 8,4X16 RFR	
310	312105-0453		2	SCREW M6S ISO 4017 M8X25 A480	
320	312105-0449		4	SCREW M6S ISO 4017 M8X16 A480	
TBA 1500S, TPA 1000SQ, TBA 1890S, TBA 2000S, TPA 0750SQ, TBA 1400B (See drawing on page: 5-280)					
010	1538963-0000		2	RAIL	
070	2724952-0000		1	SUPPORTING ARM	
080	2715502-0000		1	SUPPORTING ARM	
090	1346588-0000		1	DRIP PLATE	
220	312105-0451		10	SCREW M6S ISO 4017 M8X20 A480	
240	312605-0318		2	HEXAGON NUT, M6M M8 A280	
260	315105-0165		14	WASHER BRB 8,4X16 RFR	
320	312105-0449		2	SCREW M6S ISO 4017 M8X16 A480	
TPA 0500SQ (See drawing on page: 5-278)					
010	1558941-0000		2	RAIL	
050	1144899-0000		2	SUPPORT	
070	2724937-0000		1	SUPPORTING ARM	
080	2875856-0000		1	SUPPORTING ARM	
090	1478127-0000		1	DRIP PLATE	
220	312105-0451		5	SCREW M6S ISO 4017 M8X20 A480	
240	312605-0318		1	HEXAGON NUT, M6M M8 A280	
260	315105-0165		12	WASHER BRB 8,4X16 RFR	
310	312105-0453		2	SCREW M6S ISO 4017 M8X25 A480	
320	312105-0449		4	SCREW M6S ISO 4017 M8X16 A480	
Common Parts					
020	1517567-0000		1	PLATE	
030	1144552-0000		1	PLATE	
040	1517563-0000		1	BRACKET	
060	1517302-0000		2	SUPPORT PLATE	
200	312105-0368		2	SCREW M6S ISO 4017 M6X16 A480	
210	312105-0370		4	SCREW M6S ISO 4017 M6X20 A480	
230	312115-0497		2	SCREW ISO4762 M10X35 A4 80	
250	315105-0153		6	WASHER BRB 6,4X12 RFR	
270	315105-0171		2	WASHER BRB 10X18 RFR	
290	342722-0203		1	STRAIGHT COUPLING	
300	90166-0132	MM	2000	TUBE 6 MM PA,TRANSP.	

Machine Type | Group Description | Used-In | Group Number | Page No

OUT FEED DRIVING SYSTEM

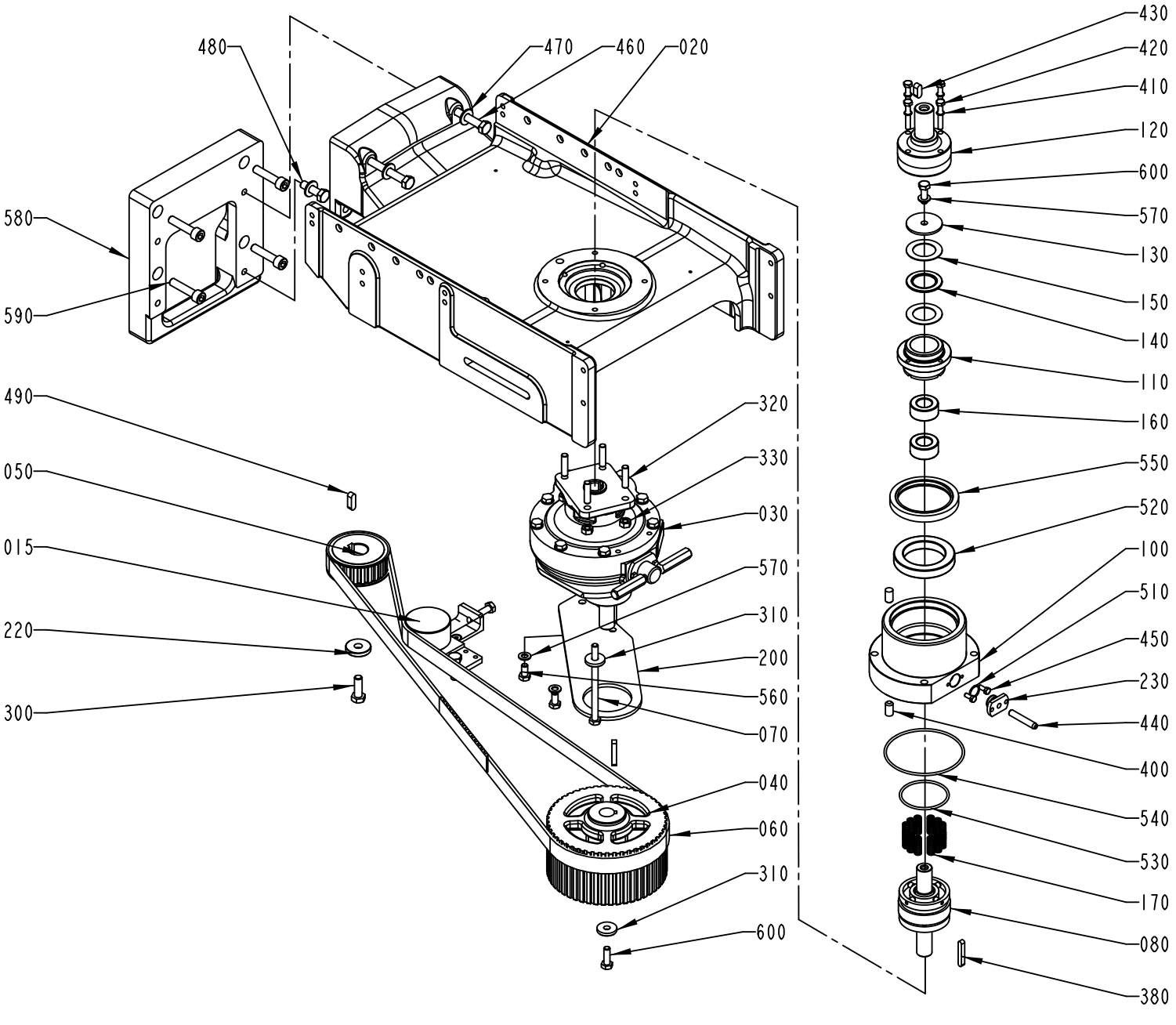

1484210-4
ECM 95375

ECM: 383375 - 20090115
Group number: 1484210-0200
Assembly Drawing: 1484210-4_1_AA

Pos	Part No	UN	Qty	Description	Page No
TBA 0200B, TBA 0250B, TBA 0330S, TBA 0500S, TBA 0500SQ, TBA 0500B, TBA 1000B, TBA 1000SQ, TBA 1000S, TPA 0500SQ					
040	1498620-0000		1	PULLEY	
050	1144802-0000		1	PULLEY	
060	1498529-0000		1	TIMING BELT	
080	1282343-0000		1	BLOCK	
110	1350564-0000		1	CLAMP HUB	
TBA 0200M, TBA 0200SQ, TBA 0200S, TBA 0250S, TPA 0330SQ, TPA 0250SQ, TPA 0200SQ, TBA 0250SQ					
040	1499064-0000		1	PULLEY	
050	1144802-0000		1	PULLEY	
060	1499059-0000		1	TIMING BELT	
080	1282343-0000		1	BLOCK	
110	1350564-0000		1	CLAMP HUB	
TBA 1500S, TPA 1000SQ, TPA 0750SQ					
040	1498620-0000		1	PULLEY	
050	1144802-0000		1	PULLEY	
060	1498528-0000		1	TIMING BELT	
080	1282343-0000		1	BLOCK	
110	1350564-0000		1	CLAMP HUB	
580	1349160-0000		1	SPACER	
590	312115-0500		4	SCREW ISO4762 M10X45 A4 80	
TBA 1890S, TBA 2000S, TBA 1400B					
040	2588329-0000		1	PULLEY	
050	2588328-0000		1	PULLEY	
060	2616227-0000		1	TIMING BELT	
080	2644178-0000		1	BLOCK	
110	2644177-0000		1	CLAMP HUB	
580	1349160-0000		1	SPACER	
590	312115-0500		4	SCREW ISO4762 M10X45 A4 80	
Common Parts					
015	1285875-0200		1	BELT TENSIONER	**5-285**
020	1478908-0000		1	SUPPORT	
030	1490085-0000		1	GEAR BOX	**5-287**
070	312105-0475		1	SCREW M6S ISO 4014 M8X120 A480	
100	1478905-0000		1	FLANGE	
120	1478753-0000		1	SHAFT	
130	1260832-0000		1	WASHER	
140	90083-0052		1	NEEDLE ROLLER THRUST BEARING, 30X47X2 MM	
150	90083-0053		2	SHAFT LOCATING WASHER, 30X47X1MM	
160	1484448-0000		2	ROLLER BEARING	
170	1282345-0000		12	SPRING	
200	1499043-0000		1	BRACKET	
220	1144681-0000		1	WASHER	
230	1282335-0000		1	FLANGE	
300	312105-0495		1	SCREW M6S ISO 4017 M10X30 A480	
310	315125-0165		2	WASHER TBRSB 8,4X26X5 A4	
320	1490442-0000		4	STUD SCREW 8X20	
330	312605-0318		4	HEXAGON NUT, M6M M8 A280	
380	315705-0239		2	PARALLEL KEY W. ROUND ENDS 6X6X40 MM	
400	311103-0454		2	PARALLEL PIN ISO 2338 10M6X20 A1	
410	315211-0103		4	BONDED SEAL SS/NBR90 M6	
420	312109-0378		4	SCREW M6S ISO 4017 M6X40 A480	
430	315705-0263		1	PARALLEL KEY W. ROUND ENDS 8X7X20 MM	
440	90044-0117		1	PROX.SWITCH IX 0208	
450	312105-0327		2	SCREW M6S ISO 4017 M5X12 A480	
460	312105-0507		2	SCREW M6S ISO 4014 M10X80 A480	
470	315105-0173		4	WASHER BRB 10,5X22 RFR	
480	312115-0497		2	SCREW ISO4762 M10X35 A4 80	
490	315705-0265		1	PARALLEL KEY W. ROUND ENDS 8X7X25 MM	
510	315202-0113		1	O-RING 15,1X1,6 MM	
520	1484447-0000		1	BALL BEARING	
530	315202-0303		1	O-RING 59,5X3 MM	
540	315202-0311		1	O-RING 99,5X3 MM	
550	90091-0416		1	RADIAL SEAL 70X90X10 MM DUST LIP	
560	312105-0449		2	SCREW M6S ISO 4017 M8X16 A480	
570	315105-0165		3	WASHER BRB 8,4X16 RFR	
600	312105-0453		2	SCREW M6S ISO 4017 M8X25 A480	

Machine Type | Group Description | Used-In | Group Number | Page No

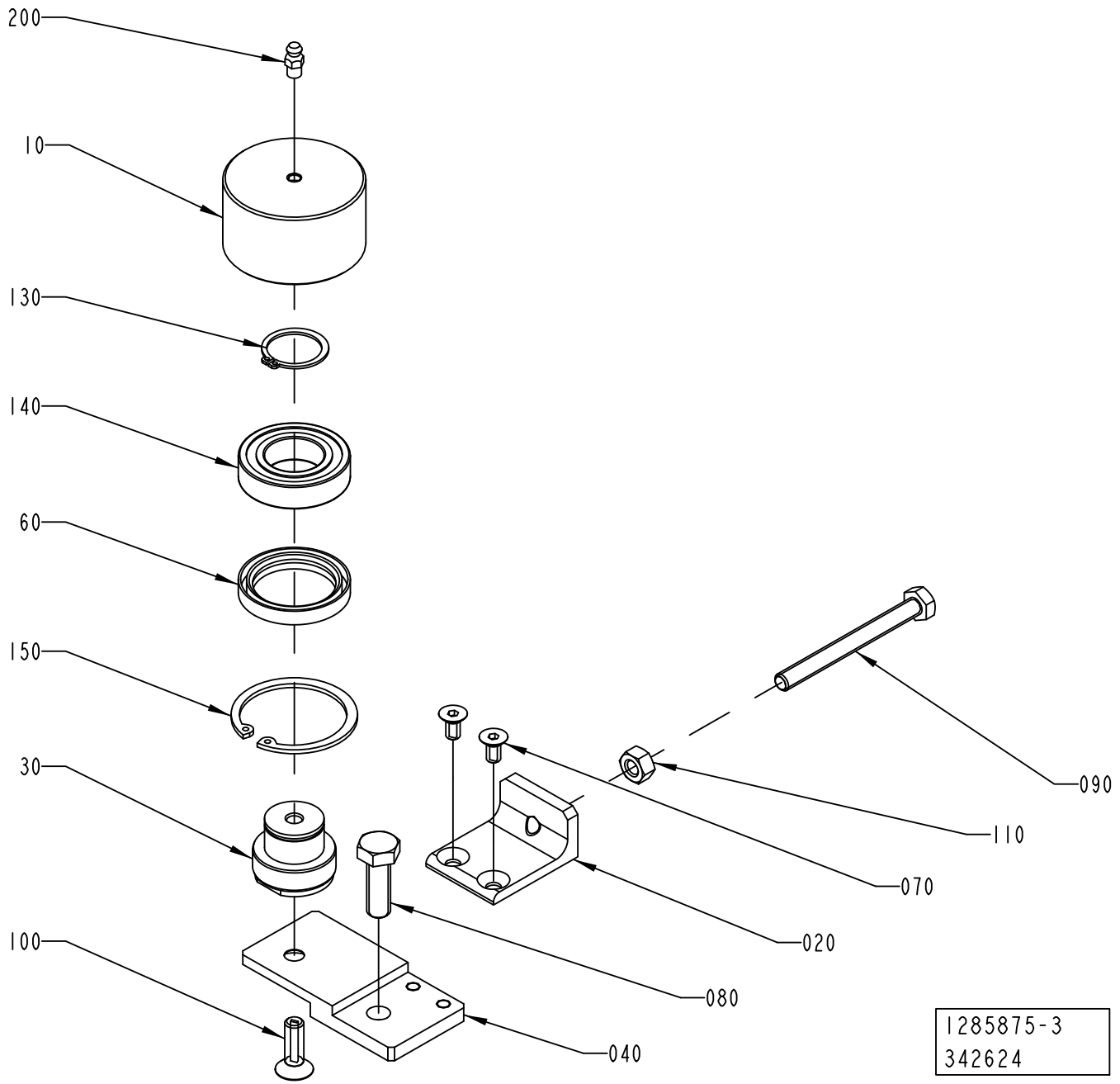
200
10
130
140
60
150
30
100
090
110
070
020
080
040
1285875-3
342624

ECM: 348649 - 20080701
Group number: 1285875-0200
Assembly Drawing: 1285875-3_1_AB

Pos	Part No	UN	Qty	Description	Page No
-					
010	2958240-0000		1	ROLLER	
020	1498064-0000		1	BLOCK	
030	1478302-0000		1	AXLE BOLT	
040	1498067-0000		1	PLATE	
060	1350305-0000		1	SEALING RING	
070	312155-0366		2	SCREW DIN 7991 MF6S M6X12 A4 70	
080	312105-0495		1	SCREW M6S ISO 4017 M10X30 A480	
090	1498066-0000		1	SCREW	
100	312155-0453		1	SCREW DIN 7991 MF6S M8X25 A4 70	
110	312605-0318		1	HEXAGON NUT, M6M M8 A280	
130	315751-0119		1	RETAINING RING FOR SHAFT DIN 471 25 SS	
140	321306-0105		1	BALL BEARING, 25X47X12 MM	
150	90141-0019		1	RETAINING RING FOR BORE DIN 472 50 A2	
160	90296-0068		1	SHELL ALVANIA GREASE EP 2	
200	344502-0021		1	GREASE NIPPLE STRAIGHT M6	

Pos	Part No	UN	Qty	Description	Page No

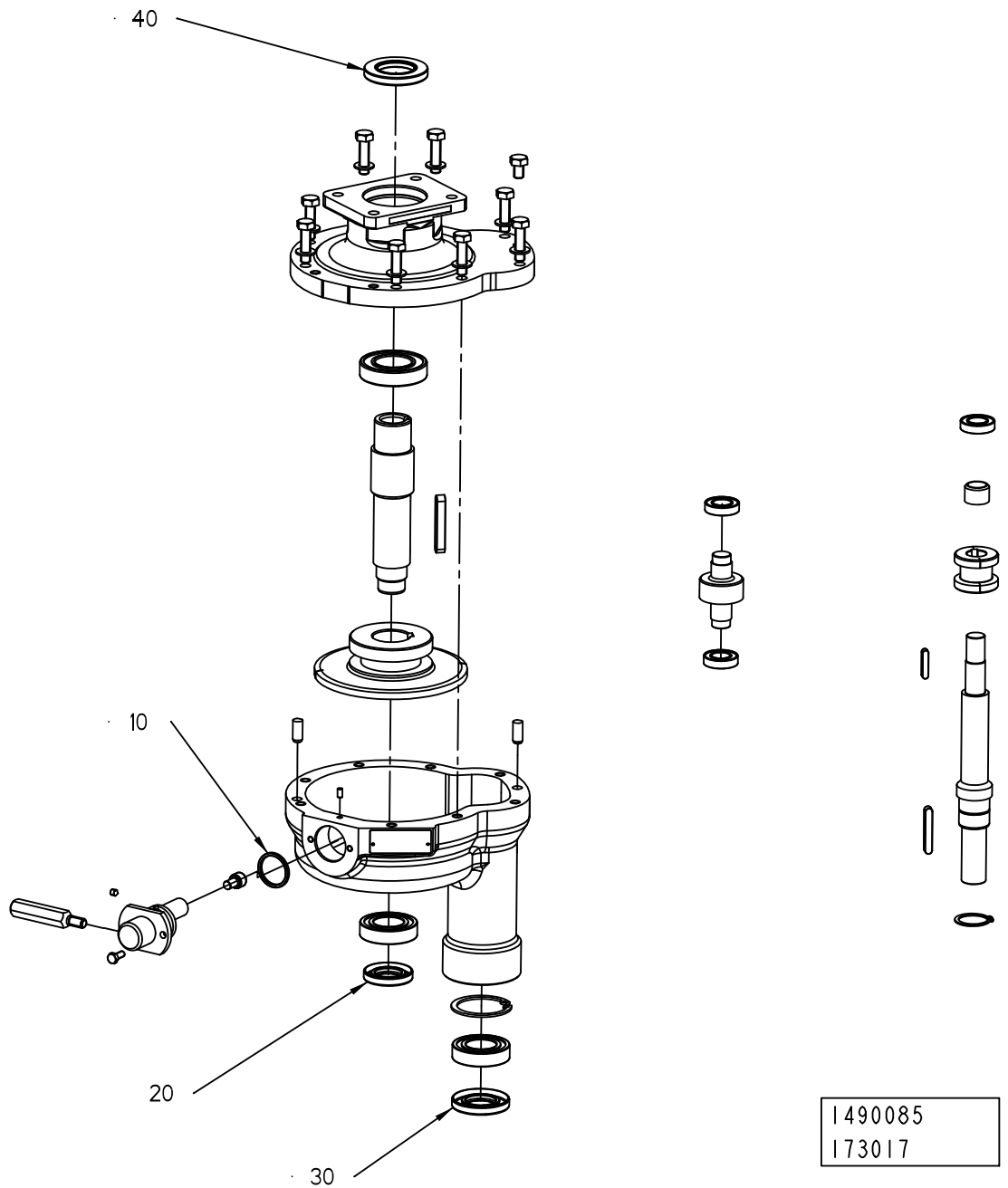
40
10
20
30
1490085
173017

ECM: 190921 - 20041104
Group number: 1490085-0000
Assembly Drawing: 1490085_2_AB

Pos	Part No	UN	Qty	Description	Page No
-					
010	315202-0217		1	O-RING 24,2X3 MM	
020	90091-0404		1	RADIAL SEAL 22X40X7 MM DUST LIP	
030	90091-0148		1	RADIAL SEAL 25X47X7 MM DUST LIP	
040	90091-0299		1	RADIAL SEAL 30X52X7 MM DUST LIP	

Pos	Part No	UN	Qty	Description	Page No

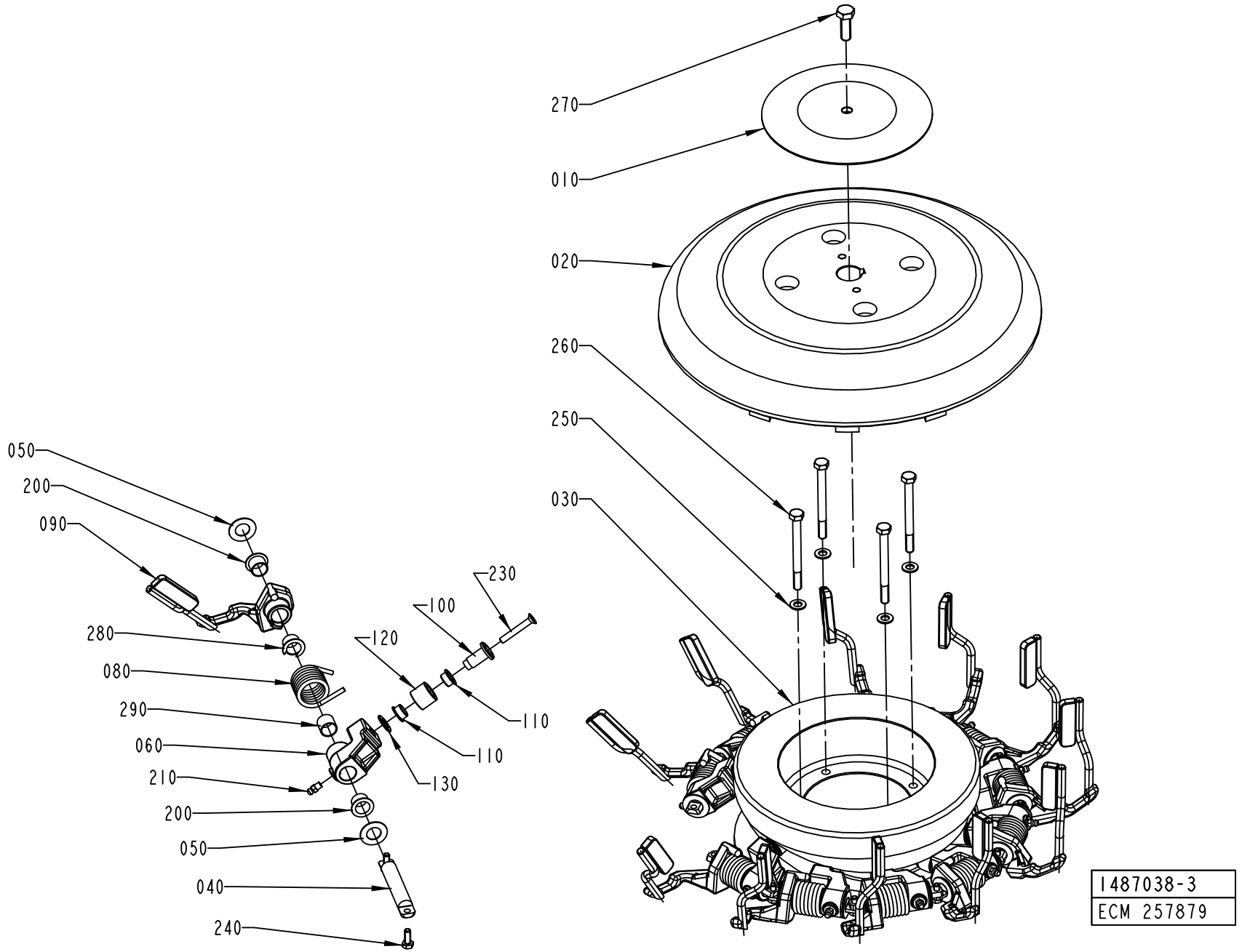
270
010
020
260
250
030
050
200
090
280
080
290
060
210
200
050
040
240
230
100
120
110
110
130
1487038-3
ECM 257879

ECM: 368997 - 20090101
Group number: 1487038-0300
Assembly Drawing: 1487038-3_1_AC

This list covers pages from 5-288 to 5-295

Pos	Part No	UN	Qty	Description	Page No
TPA 0500SQ (See drawing on page: 5-290)					
020	2532580-0000		1	HATCH	
030	2540594-0000		1	CAM	
040	1350543-0000		8	AXLE PIN	
050	1260852-0000		16	WASHER	
060	2556525-0000		8	LEVER	
080	1549615-0000		8	SPRING	
090	2529664-0000		8	CARRIER	
100	1260851-0000		8	AXLE PIN	
110	90240-0316		16	FLANGE BUSHING, 12X14X8 MM	
120	1260853-0000		8	RING	
130	1285254-0000		8	WASHER	
200	90240-0263		16	FLANGE BUSHING, 15X17X12 MM	
210	344502-0021		8	GREASE NIPPLE STRAIGHT M6	
230	312155-0378		8	SCREW DIN 7991 MF6S M6X40 A4 70	
240	312105-0368		16	SCREW M6S ISO 4017 M6X16 A480	
280	2545245-0000		8	BUSHING	
290	90240-0258		8	BUSHING, 15X17X15 MM	
TPA 1000SQ NOQC, TPA 1000SQ QC, TPA 0750SQ QC (See drawing on page: 5-290)					
020	2532580-0000		1	HATCH	
030	2540594-0000		1	CAM	
040	1350543-0000		8	AXLE PIN	
050	1260852-0000		16	WASHER	
060	2556525-0000		8	LEVER	
080	1549615-0000		8	SPRING	
090	2543231-0000		8	CARRIER	
100	1260851-0000		8	AXLE PIN	
110	90240-0316		16	FLANGE BUSHING, 12X14X8 MM	
120	1260853-0000		8	RING	
130	1285254-0000		8	WASHER	
200	90240-0263		16	FLANGE BUSHING, 15X17X12 MM	
210	344502-0021		8	GREASE NIPPLE STRAIGHT M6	
230	312155-0378		8	SCREW DIN 7991 MF6S M6X40 A4 70	
240	312105-0368		16	SCREW M6S ISO 4017 M6X16 A480	
280	2545245-0000		8	BUSHING	
290	90240-0258		8	BUSHING, 15X17X15 MM	
TBA 0200B QC, TBA 0330S QC, TBA 0250B QC (See drawing on page: 5-290)					
020	2532580-0000		1	HATCH	
030	2540593-0000		1	CAM	
040	1350543-0000		8	AXLE PIN	
050	1260852-0000		16	WASHER	
060	2556526-0000		8	LEVER	
080	1349985-0000		8	SPRING	
090	2563274-0000		8	CARRIER	
100	1260851-0000		8	AXLE PIN	
110	90240-0316		16	FLANGE BUSHING, 12X14X8 MM	
120	1260853-0000		8	RING	
130	1285254-0000		8	WASHER	
200	90240-0263		16	FLANGE BUSHING, 15X17X12 MM	
210	344502-0021		8	GREASE NIPPLE STRAIGHT M6	
230	312155-0378		8	SCREW DIN 7991 MF6S M6X40 A4 70	
240	312105-0368		16	SCREW M6S ISO 4017 M6X16 A480	
280	2545245-0000		8	BUSHING	
290	90240-0258		8	BUSHING, 15X17X15 MM	
TBA 0200S, TBA 0200M QC, TBA 0250S QC (See drawing on page: 5-288)					
020	1478925-0000		1	HATCH	
030	2540593-0000		1	CAM	
040	1350543-0000		12	AXLE PIN	
050	1260852-0000		24	WASHER	
060	2556526-0000		12	LEVER	
080	1349985-0000		12	SPRING	
090	2563274-0000		12	CARRIER	
100	1260851-0000		12	AXLE PIN	
110	90240-0316		24	FLANGE BUSHING, 12X14X8 MM	
120	1260853-0000		12	RING	
130	1285254-0000		12	WASHER	
200	90240-0263		24	FLANGE BUSHING, 15X17X12 MM	
210	344502-0021		12	GREASE NIPPLE STRAIGHT M6	
230	312155-0378		12	SCREW DIN 7991 MF6S M6X40 A4 70	
240	312105-0368		12	SCREW M6S ISO 4017 M6X16 A480	
280	2545245-0000		12	BUSHING	
290	90240-0258		12	BUSHING, 15X17X15 MM	
TBA 0200SQ QC, TBA 0250SQ QC (See drawing on page: 5-288)					
020	1478925-0000		1	HATCH	
030	2540594-0000		1	CAM	
040	1350543-0000		12	AXLE PIN	
050	1260852-0000		24	WASHER	
060	2556525-0000		12	LEVER	
080	1549615-0000		12	SPRING	
090	2682222-0000		12	CARRIER	
100	1260851-0000		12	AXLE PIN	
110	90240-0316		24	FLANGE BUSHING, 12X14X8 MM	
120	1260853-0000		12	RING	
130	1285254-0000		12	WASHER	

Machine Type | Group Description | Used-In | Group Number | Page No

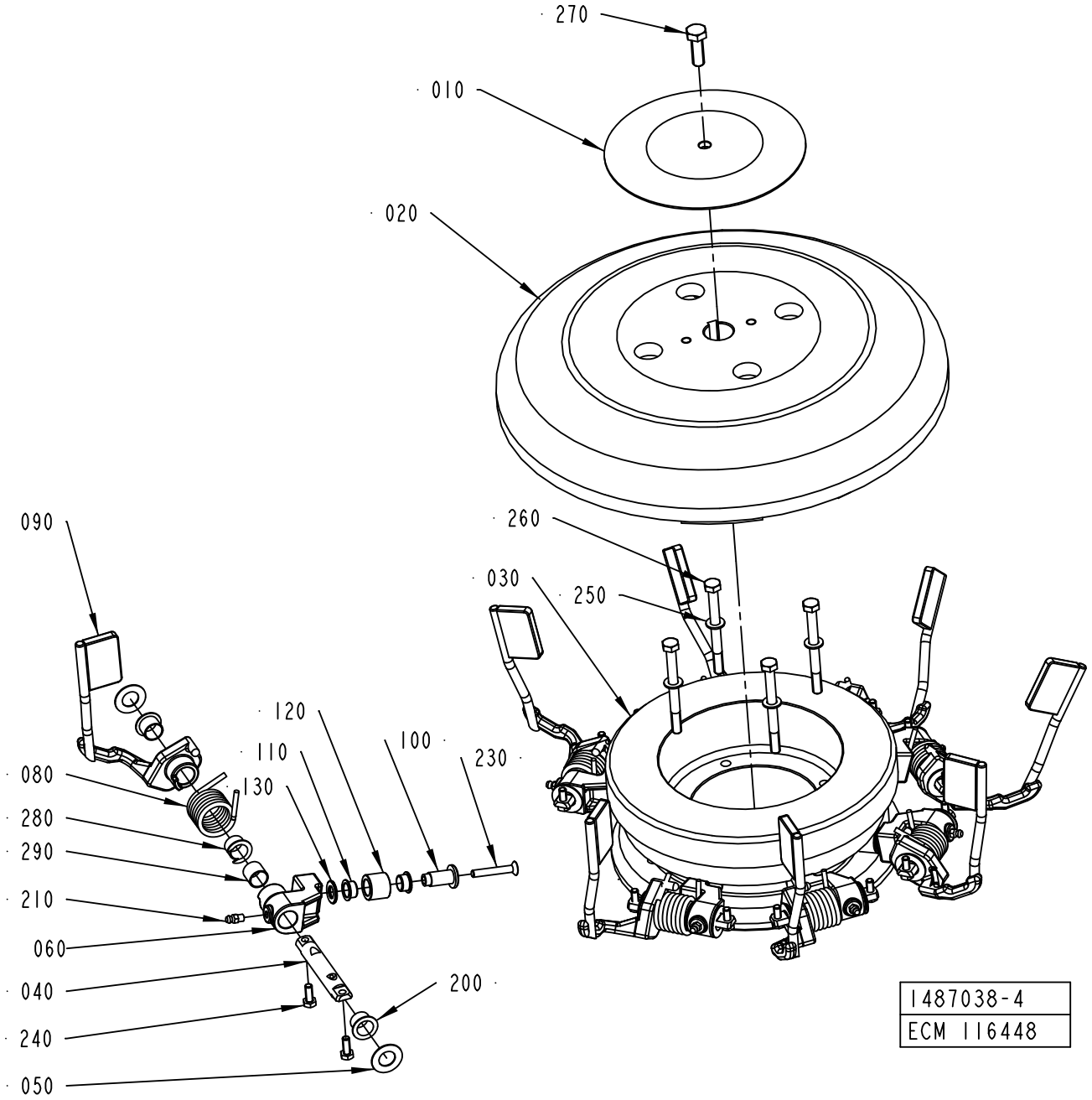
270
010
020
090
260
030
250
120
110
100
230
080
130
280
290
210
060
040
200
240
050
1487038-4
ECM 116448

ECM: 368997 - 20090101
Group number: 1487038-0300
Assembly Drawing: 1487038-4_1_AA

This list covers pages from 5-288 to 5-295

Pos	Part No	UN	Qty	Description	Page No
TBA 0200SQ QC, TBA 0250SQ QC (Cont'd) (See drawing on page: 5-288)					
200	90240-0263		24	FLANGE BUSHING, 15X17X12 MM	
210	344502-0021		12	GREASE NIPPLE STRAIGHT M6	
230	312155-0378		12	SCREW DIN 7991 MF6S M6X40 A4 70	
240	312105-0368		12	SCREW M6S ISO 4017 M6X16 A480	
280	2545245-0000		12	BUSHING	
290	90240-0258		12	BUSHING, 15X17X15 MM	
TBA 0500S, TBA 0500B, TBA 1000B, TBA 1000S (See drawing on page: 5-294)					
020	1484289-0000		1	HATCH	
030	1478228-0000		1	CAM	
040	1348540-0000		8	PIVOT AXLE	
050	1260852-0000		16	WASHER	
060	2734451-0000		8	LEVER	
080	1349985-0000		8	SPRING	
090	2734456-0000		8	CARRIER	
100	1260851-0000		8	AXLE PIN	
110	90240-0316		16	FLANGE BUSHING, 12X14X8 MM	
120	1260853-0000		8	RING	
130	1285254-0000		8	WASHER	
200	90240-0263		16	FLANGE BUSHING, 15X17X12 MM	
210	344502-0021		8	GREASE NIPPLE STRAIGHT M6	
230	312155-0378		8	SCREW DIN 7991 MF6S M6X40 A4 70	
240	312105-0368		16	SCREW M6S ISO 4017 M6X16 A480	
280	2545245-0000		8	BUSHING	
290	90240-0258		8	BUSHING, 15X17X15 MM	
TBA 0500SQ, TBA 1000SQ (See drawing on page: 5-292)					
020	1484289-0000		1	HATCH	
030	1478228-0000		1	CAM	
040	1348540-0000		8	PIVOT AXLE	
050	1260852-0000		16	WASHER	
060	2734450-0000		8	LEVER	
080	1549615-0000		8	SPRING	
090	2734454-0000		8	CARRIER	
100	1260851-0000		8	AXLE PIN	
110	90240-0316		16	FLANGE BUSHING, 12X14X8 MM	
120	1260853-0000		8	RING	
130	1285254-0000		8	WASHER	
200	90240-0263		16	FLANGE BUSHING, 15X17X12 MM	
210	344502-0021		8	GREASE NIPPLE STRAIGHT M6	
230	312155-0378		8	SCREW DIN 7991 MF6S M6X40 A4 70	
240	312105-0368		16	SCREW M6S ISO 4017 M6X16 A480	
280	2545245-0000		8	BUSHING	
290	90240-0258		8	BUSHING, 15X17X15 MM	
TBA 1500S (See drawing on page: 5-294)					
020	1484289-0000		1	HATCH	
030	1478228-0000		1	CAM	
040	1348540-0000		8	PIVOT AXLE	
050	1260852-0000		16	WASHER	
060	2734451-0000		8	LEVER	
080	1349985-0000		8	SPRING	
090	2693454-0000		8	CARRIER	
100	1260851-0000		8	AXLE PIN	
110	90240-0316		16	FLANGE BUSHING, 12X14X8 MM	
120	1260853-0000		8	RING	
130	1285254-0000		8	WASHER	
200	90240-0263		16	FLANGE BUSHING, 15X17X12 MM	
210	344502-0021		8	GREASE NIPPLE STRAIGHT M6	
230	312155-0378		8	SCREW DIN 7991 MF6S M6X40 A4 70	
240	312105-0368		16	SCREW M6S ISO 4017 M6X16 A480	
280	2545245-0000		8	BUSHING	
290	90240-0258		8	BUSHING, 15X17X15 MM	
TBA 1890S QC, TBA 2000S QC, TBA 1400B (See drawing on page: 5-290)					
020	2594911-0000		1	HATCH	
030	2540593-0000		1	CAM	
040	1348540-0000		6	PIVOT AXLE	
050	1260852-0000		12	WASHER	
060	2734451-0000		6	LEVER	
080	1349985-0000		6	SPRING	
090	2664596-0000		6	CARRIER	
100	1260851-0000		6	AXLE PIN	
110	90240-0316		12	FLANGE BUSHING, 12X14X8 MM	
120	1260853-0000		6	RING	
130	1285254-0000		6	WASHER	
200	90240-0263		12	FLANGE BUSHING, 15X17X12 MM	
210	344502-0021		6	GREASE NIPPLE STRAIGHT M6	
230	312155-0378		6	SCREW DIN 7991 MF6S M6X40 A4 70	
240	312105-0368		12	SCREW M6S ISO 4017 M6X16 A480	
280	2545245-0000		6	BUSHING	
290	90240-0258		6	BUSHING, 15X17X15 MM	
TPA 0200SQ QC L_OUT, TPA 0250SQ QC L_OUT (See drawing on page: 5-288)					
020	1478925-0000		1	HATCH	
030	2540594-0000		1	CAM	
040	1350543-0000		12	AXLE PIN	
050	1260852-0000		24	WASHER	

Machine Type | Group Description | Used-In | Group Number | Page No

OUTFEED WHEEL

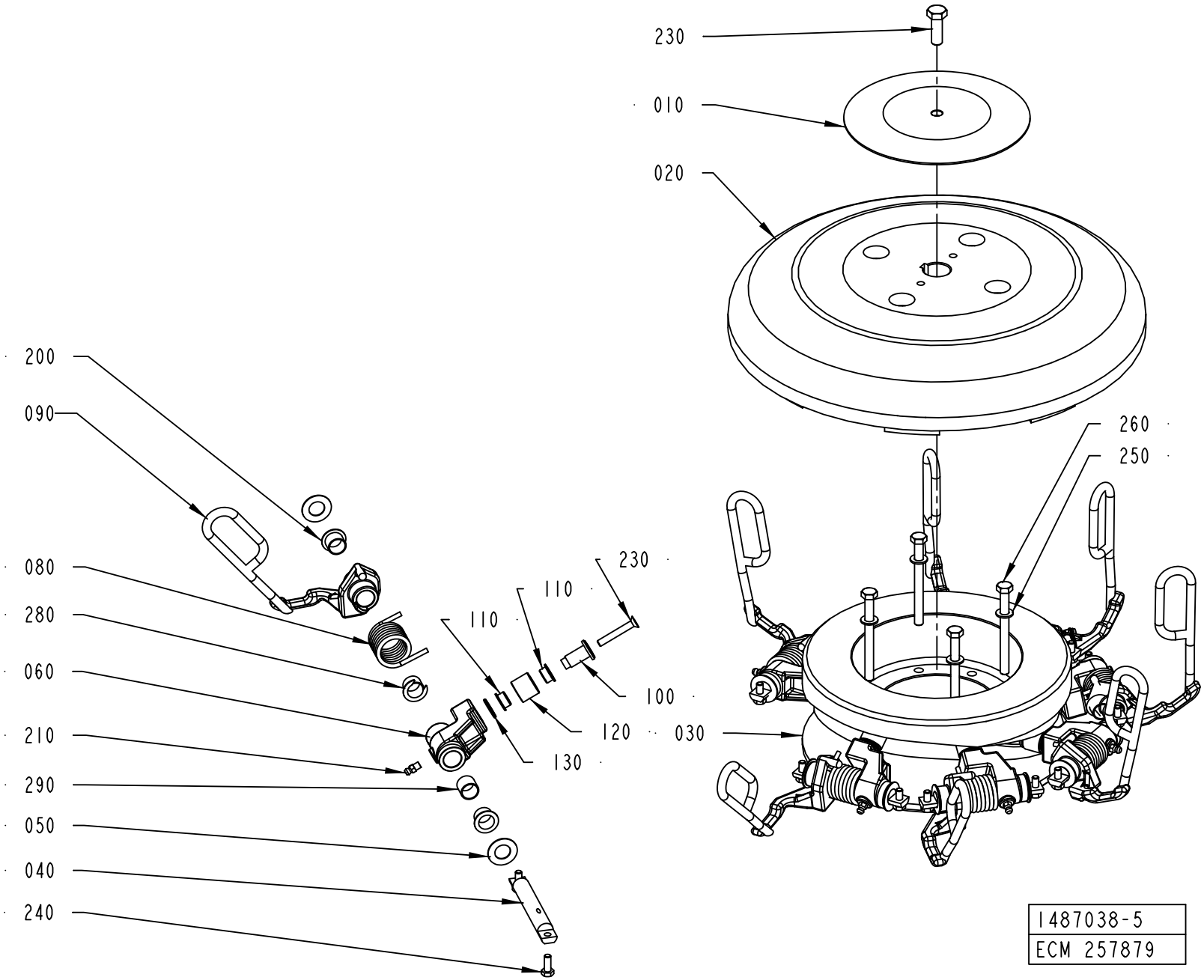

ECM: 368997 - 20090101
Group number: 1487038-0300
Assembly Drawing: 1487038-5_1_AA

This list covers pages from 5-288 to 5-295

Pos	Part No	UN	Qty	Description	Page No
TPA 0200SQ QC L_OUT, TPA 0250SQ QC L_OUT (Cont'd) (See drawing on page: 5-288)					
060	2556525-0000		12	LEVER	
080	1549615-0000		12	SPRING	
090	2552018-0000		12	CARRIER	
100	1260851-0000		12	AXLE PIN	
110	90240-0316		24	FLANGE BUSHING, 12X14X8 MM	
120	1260853-0000		12	RING	
130	1285254-0000		12	WASHER	
200	90240-0263		24	FLANGE BUSHING, 15X17X12 MM	
210	344502-0021		12	GREASE NIPPLE STRAIGHT M6	
230	312155-0378		12	SCREW DIN 7991 MF6S M6X40 A4 70	
240	312105-0368		12	SCREW M6S ISO 4017 M6X16 A480	
280	2545245-0000		12	BUSHING	
290	90240-0258		12	BUSHING, 15X17X15 MM	
TPA 0200SQ QC R_OUT, TPA 0250SQ QC R_OUT (See drawing on page: 5-288)					
020	1478925-0000		1	HATCH	
030	2540593-0000		1	CAM	
040	1350543-0000		12	AXLE PIN	
050	1260852-0000		24	WASHER	
060	2556526-0000		12	LEVER	
080	1349985-0000		12	SPRING	
090	2640721-0000		12	CARRIER	
100	1260851-0000		12	AXLE PIN	
110	90240-0316		24	FLANGE BUSHING, 12X14X8 MM	
120	1260853-0000		12	RING	
130	1285254-0000		12	WASHER	
200	90240-0263		24	FLANGE BUSHING, 15X17X12 MM	
210	344502-0021		12	GREASE NIPPLE STRAIGHT M6	
230	312155-0378		12	SCREW DIN 7991 MF6S M6X40 A4 70	
240	312105-0368		12	SCREW M6S ISO 4017 M6X16 A480	
280	2545245-0000		12	BUSHING	
290	90240-0258		12	BUSHING, 15X17X15 MM	
TPA 0330SQ L_OUT (See drawing on page: 5-288)					
020	1478925-0000		1	HATCH	
030	1478228-0000		1	CAM	
040	1350543-0000		12	AXLE PIN	
050	1260852-0000		24	WASHER	
060	2556525-0000		12	LEVER	
080	1549615-0000		12	SPRING	
090	2818564-0000		12	CARRIER	
100	1260851-0000		12	AXLE PIN	
110	90240-0316		24	FLANGE BUSHING, 12X14X8 MM	
120	1260853-0000		12	RING	
130	1285254-0000		12	WASHER	
200	90240-0263		24	FLANGE BUSHING, 15X17X12 MM	
210	344502-0021		12	GREASE NIPPLE STRAIGHT M6	
230	312155-0378		12	SCREW DIN 7991 MF6S M6X40 A4 70	
240	312105-0368		12	SCREW M6S ISO 4017 M6X16 A480	
280	2545245-0000		12	BUSHING	
290	90240-0258		12	BUSHING, 15X17X15 MM	
TPA 0330SQ R_OUT (See drawing on page: 5-288)					
020	1478925-0000		1	HATCH	
030	2540593-0000		1	CAM	
040	1350543-0000		12	AXLE PIN	
050	1260852-0000		24	WASHER	
060	2556526-0000		12	LEVER	
080	1349985-0000		12	SPRING	
090	2914992-0000		12	CARRIER	
100	1260851-0000		12	AXLE PIN	
110	90240-0316		24	FLANGE BUSHING, 12X14X8 MM	
120	1260853-0000		12	RING	
130	1285254-0000		12	WASHER	
200	90240-0263		24	FLANGE BUSHING, 15X17X12 MM	
210	344502-0021		12	GREASE NIPPLE STRAIGHT M6	
230	312155-0378		12	SCREW DIN 7991 MF6S M6X40 A4 70	
240	312105-0368		12	SCREW M6S ISO 4017 M6X16 A480	
280	2545245-0000		12	BUSHING	
290	90240-0258		12	BUSHING, 15X17X15 MM	
Common Parts					
010	1478558-0000		1	WASHER	
250	315105-0165		4	WASHER BRB 8,4X16 RFR	
260	312105-0469		4	SCREW M6S ISO 4014 M8X90 A480	
270	312105-0495		1	SCREW M6S ISO 4017 M10X30 A480	

Machine Type | Group Description | Used-In | Group Number | Page No

OUTFEED WHEEL

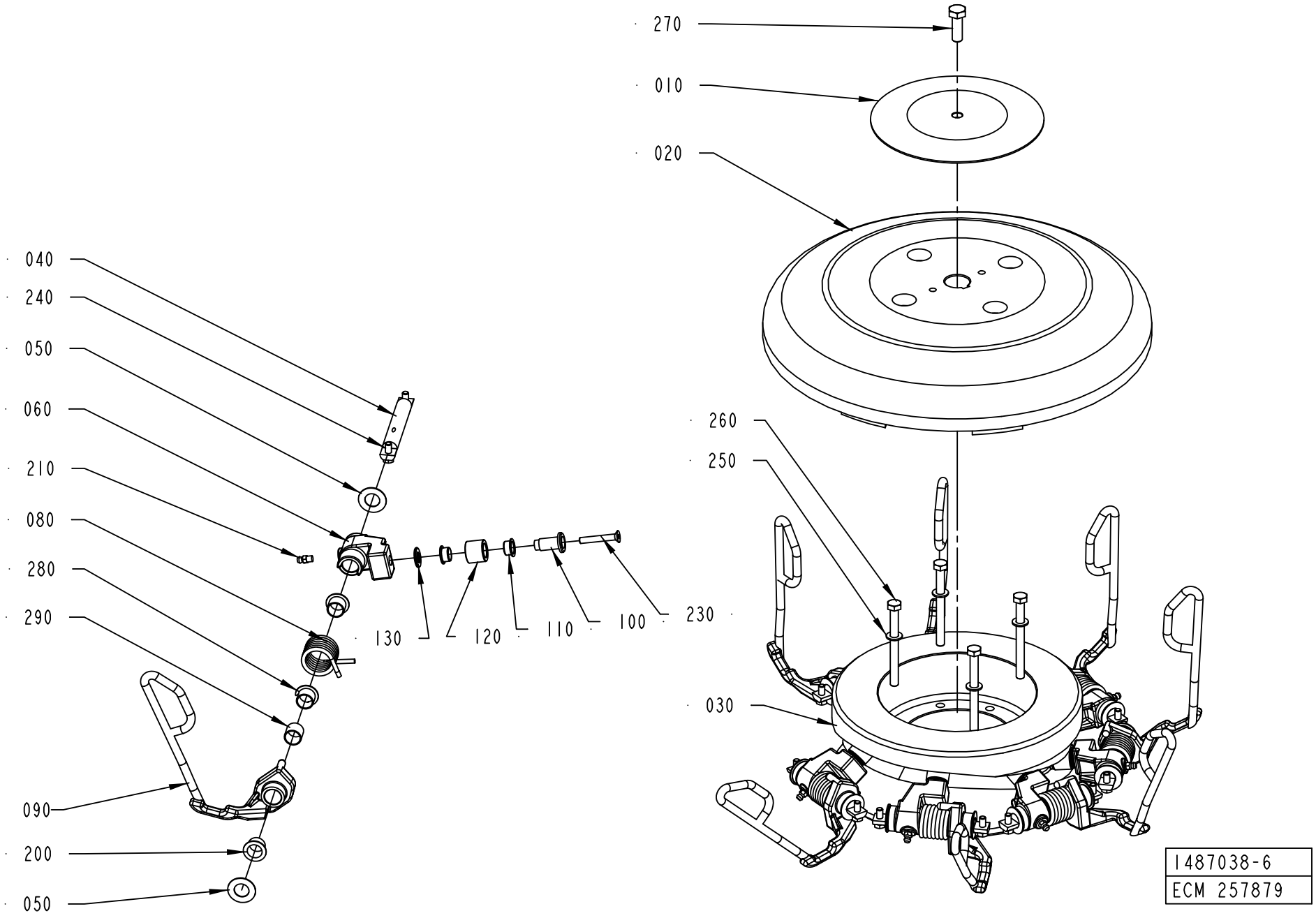

ECM: 368997 - 20090101
Group number: 1487038-0300
Assembly Drawing: 1487038-6_1_AA

This list covers pages from 5-288 to 5-295

Pos	Part No	UN	Qty	Description	Page No
SEE PREVIOUS LISTS PAGES: 5-289, 5-291, 5-293.					

Pos	Part No	UN	Qty	Description	Page No

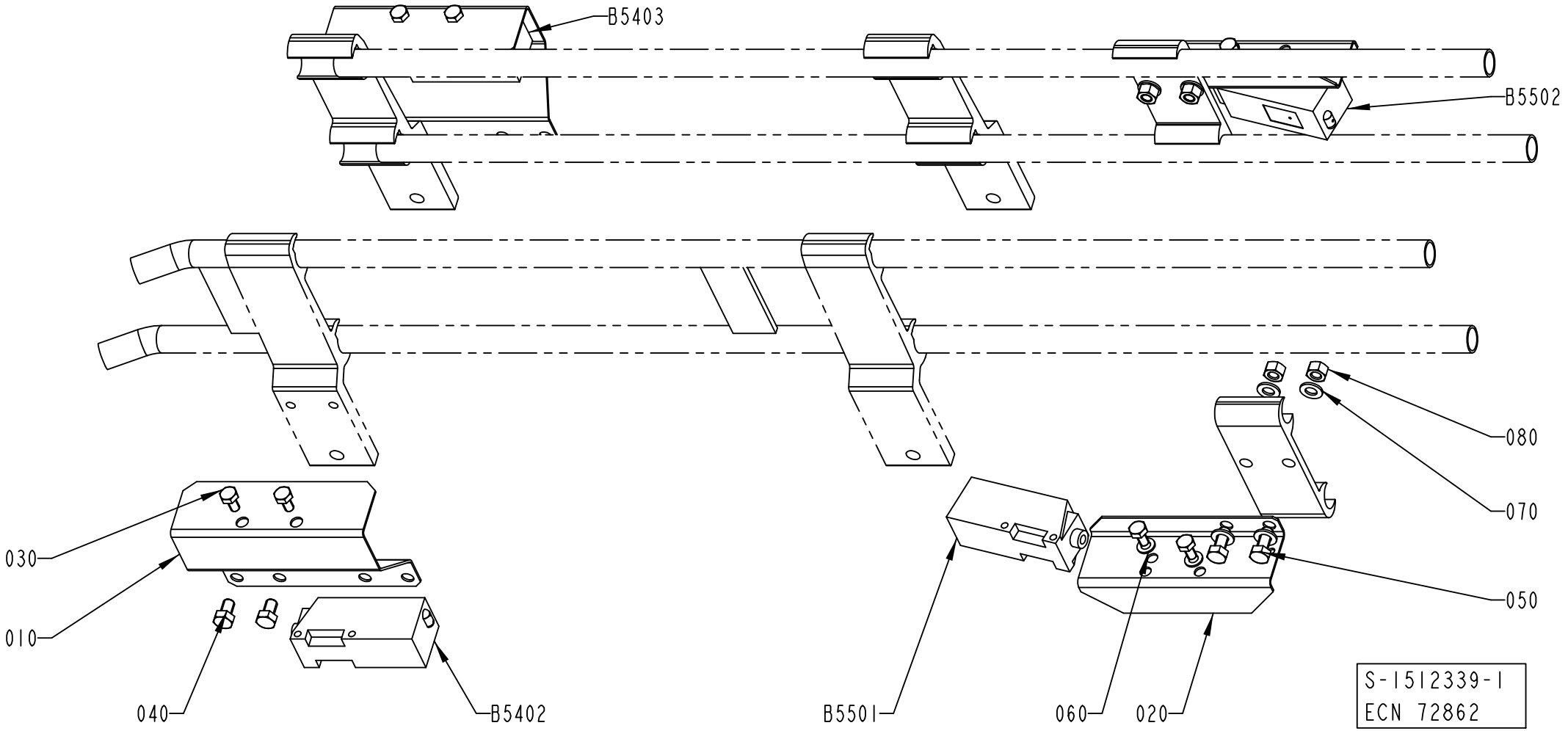
B5403
B5502
030
010
040
B5402
B5501
060
020
080
070
050
S-1512339-1
ECN 72862

Pos	Part No	UN	Qty	Description	Page No
A3/FLEX TBA 1890S, A3/FLEX TBA 2000S, A3/FLEX TBA 1400B, A3/FLEX TGA 1000SQ, A3/FLEX TGA 0500SQ, A3/FLEX TGA 0750SQ (See drawing on pages: 5-298, 6-62)					
010	1285010-0000		2	HOLDER	
020	1086889-0000		2	COVER	
025	1020637-0000		4	HOLDER	
A3/FLEX TBA 0500B, A3/FLEX TBA 1000B, A3/FLEX TBA 1000S, A3/FLEX TBA 1000SQ, A3/FLEX TPA 1000SQ, A3/FLEX TBA 0200S, A3/FLEX TBA 1500S, A3/FLEX TBA 0200B, A3/FLEX TBA 0250B, A3/FLEX TBA 0330S, A3/FLEX TPA 0330SQ, A3/FLEX TPA 0500SQ, A3/FLEX TBA 0200M, A3/FLEX TBA 0250S, A3/FLEX TBA 0500S, A3/FLEX TPA 0250SQ, A3/FLEX TPA 0200SQ, A3/FLEX TPA 0750SQ, A3/FLEX TBA 0200SQ, A3/FLEX TBA 0250SQ, A3/FLEX TBA 0500SQ (See drawing on pages: 5-296, 6-60)					
010	1285010-0000		2	HOLDER	
020	1086889-0000		2	COVER	
025	1020637-0000		2	HOLDER	
Common Parts					
030	312105-0287		8	SCREW M6S ISO 4017 M4X8 A470	
040	312105-0323		4	SCREW M6S ISO 4017 M5X8 A480	
050	312105-0327		4	SCREW M6S ISO 4017 M5X12 A480	
060	315105-0136		4	WASHER BRB 4,3X8 RFR	
070	315105-0146		16	WASHER BRB 5,3X10 RFR	
080	312605-0314		4	HEXAGON NUT, M6M M5 A280	
B5402	90232-0104		1	PH.CELL E3S-CT61-D-5M	
B5403	90232-0103		1	PH.CELL E3S-CT61-L-5M	
B5501	90232-0104		1	PH.CELL E3S-CT61-D-5M	
B5502	90232-0103		1	PH.CELL E3S-CT61-L-5M	

Pos	Part No	UN	Qty	Description	Page No

PHOTOCELL OUTFEED

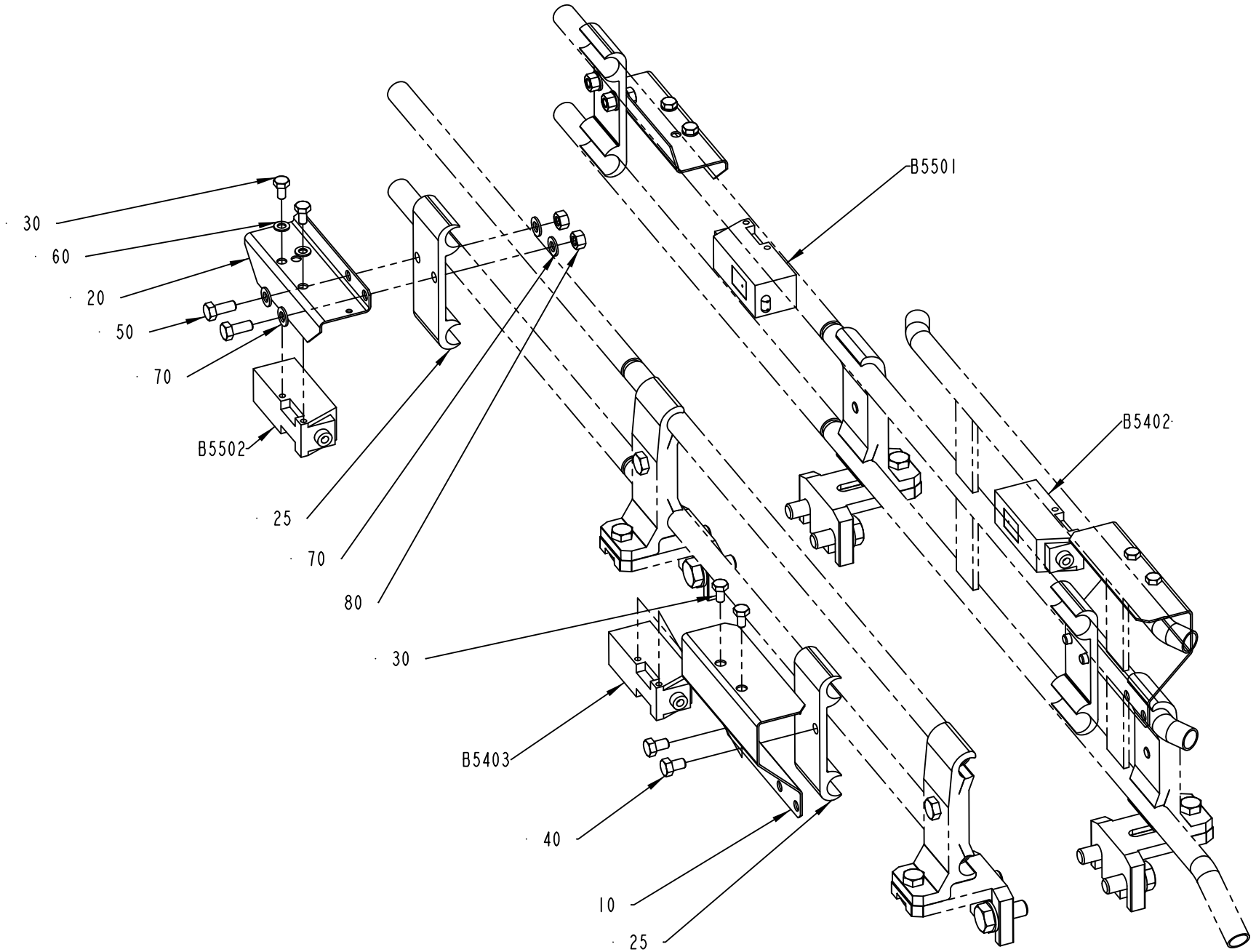

1512339-3
193145

Pos	Part No	UN	Qty	Description	Page No
A3/FLEX TBA 1890S, A3/FLEX TBA 2000S, A3/FLEX TBA 1400B, A3/FLEX TGA 1000SQ, A3/FLEX TGA 0500SQ, A3/FLEX TGA 0750SQ (See drawing on pages: 5-298, 6-62)					
010	1285010-0000		2	HOLDER	
020	1086889-0000		2	COVER	
025	1020637-0000		4	HOLDER	
A3/FLEX TBA 0500B, A3/FLEX TBA 1000B, A3/FLEX TBA 1000S, A3/FLEX TBA 1000SQ, A3/FLEX TPA 1000SQ, A3/FLEX TBA 0200S, A3/FLEX TBA 1500S, A3/FLEX TBA 0200B, A3/FLEX TBA 0250B, A3/FLEX TBA 0330S, A3/FLEX TPA 0330SQ, A3/FLEX TPA 0500SQ, A3/FLEX TBA 0200M, A3/FLEX TBA 0250S, A3/FLEX TBA 0500S, A3/FLEX TPA 0250SQ, A3/FLEX TPA 0200SQ, A3/FLEX TPA 0750SQ, A3/FLEX TBA 0200SQ, A3/FLEX TBA 0250SQ, A3/FLEX TBA 0500SQ (See drawing on pages: 5-296, 6-60)					
010	1285010-0000		2	HOLDER	
020	1086889-0000		2	COVER	
025	1020637-0000		2	HOLDER	
Common Parts					
030	312105-0287		8	SCREW M6S ISO 4017 M4X8 A470	
040	312105-0323		4	SCREW M6S ISO 4017 M5X8 A480	
050	312105-0327		4	SCREW M6S ISO 4017 M5X12 A480	
060	315105-0136		4	WASHER BRB 4,3X8 RFR	
070	315105-0146		16	WASHER BRB 5,3X10 RFR	
080	312605-0314		4	HEXAGON NUT, M6M M5 A280	
B5402	90232-0104		1	PH.CELL E3S-CT61-D-5M	
B5403	90232-0103		1	PH.CELL E3S-CT61-L-5M	
B5501	90232-0104		1	PH.CELL E3S-CT61-D-5M	
B5502	90232-0103		1	PH.CELL E3S-CT61-L-5M	

Pos	Part No	UN	Qty	Description	Page No

DROP CHUTE CRADLE

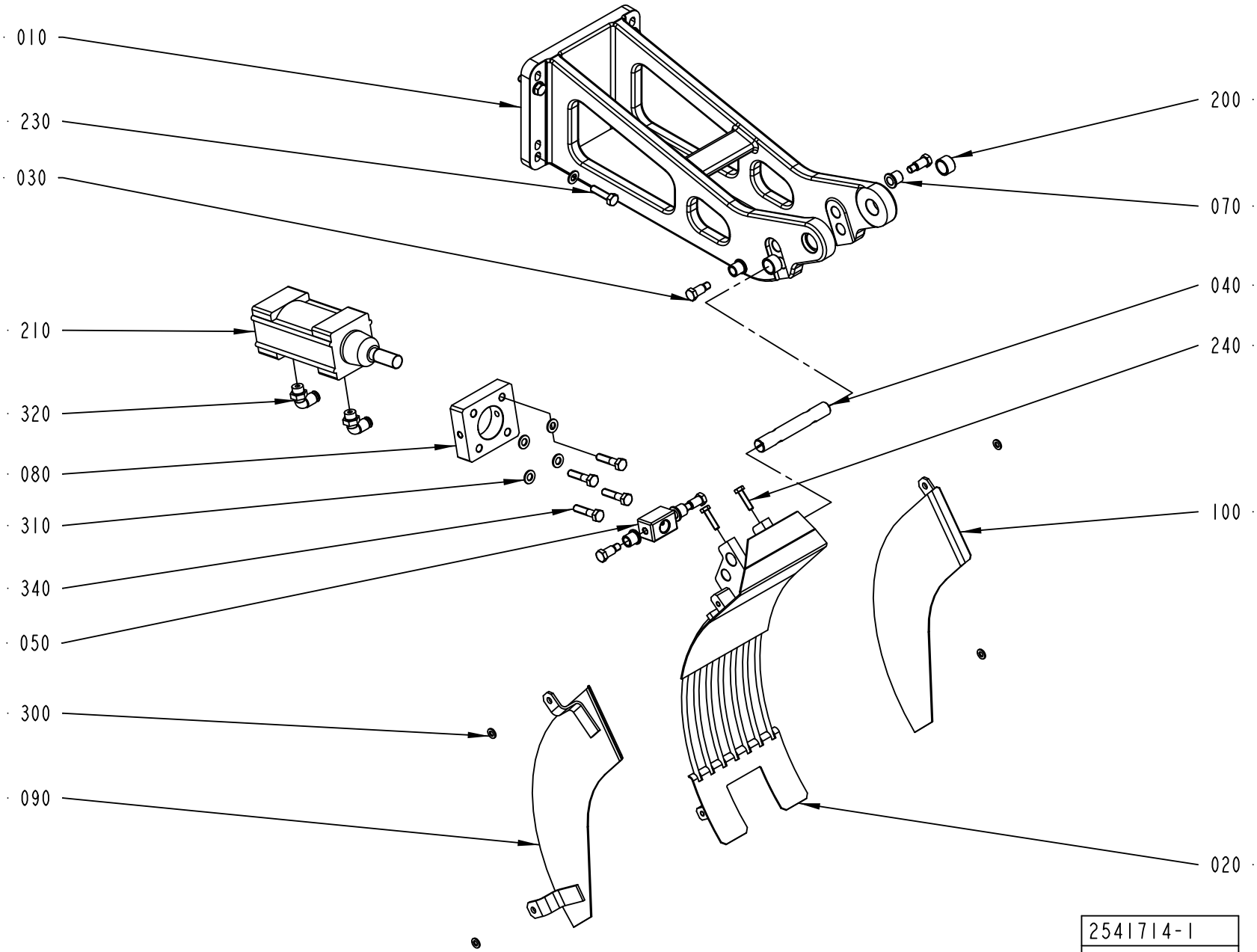

ECM: 389638 - 20090701
Group number: 2541714-0100
Assembly Drawing: 2541714-1_1_AA

This list covers pages from 5-300 to 5-303

Pos	Part No	UN	Qty	Description	Page No
TBA 1400B (See drawing on pages: 5-300, 6-4)					
020	2665204-0000		1	CRADLE	
030	449190-0000		4	SHAFT	
070	1478928-0000		4	BUSHING	
090	2770760-0000		1	PLATE	
100	2770761-0000		1	PLATE	
TBA 1500S (See drawing on pages: 5-300, 6-4)					
020	1348920-0000		1	CRADLE	
030	449190-0000		4	SHAFT	
070	1478928-0000		4	BUSHING	
090	1348854-0000		1	PLATE	
100	1349017-0000		1	PLATE	
300	315105-0153		4	WASHER BRB 6,4X12 RFR	
TBA 1890S QC, TBA 2000S QC (See drawing on pages: 5-300, 6-4)					
020	2665204-0000		1	CRADLE	
030	449190-0000		4	SHAFT	
070	1478928-0000		4	BUSHING	
090	2665205-0000		1	PLATE	
100	2665206-0000		1	PLATE	
TPA 1000SQ NOQC (See drawing on pages: 5-300, 6-4)					
020	2558146-0000		1	CRADLE	
030	449190-0000		4	SHAFT	
070	1478928-0000		4	BUSHING	
TPA 1000SQ QC, TPA 0750SQ QC (See drawing on pages: 5-300, 6-4)					
020	1348920-0000		1	CRADLE	
030	449190-0000		4	SHAFT	
070	1478928-0000		4	BUSHING	
090	1517472-0000		1	SIDE PLATE	
100	1517473-0000		1	SIDE PLATE	
300	315105-0153		4	WASHER BRB 6,4X12 RFR	
TPA 500SQ LIGHTCAP (See drawing on pages: 5-300, 6-4)					
020	2958180-0000		1	CRADLE	
030	449190-0000		4	SHAFT	
070	1478928-0000		4	BUSHING	
090	1285023-0000		1	SIDE PLATE	
100	1285022-0000		1	SIDE PLATE	
300	315105-0153		4	WASHER BRB 6,4X12 RFR	
TBA 0200B QC, TBA 0330S QC, TBA 0250B QC (See drawing on pages: 5-300, 6-4)					
020	2751788-0000		1	CRADLE	
030	449190-0000		4	SHAFT	
070	1478928-0000		4	BUSHING	
090	2650807-0000		1	SIDE PLATE	
100	2650808-0000		1	SIDE PLATE	
300	315105-0153		4	WASHER BRB 6,4X12 RFR	
TBA 0200M, TBA 0200S, TBA 0250S, TBA 0500S, TPA 0330SQ, TBA 0500B NOQC, TBA 1000B NOQC, TBA 1000S NOMOLDEDCAP, TBA 1000S STDA7, TBA 0200B NOQC, TBA 0330S NOQC, TBA 0250B NOQC, TPA 0200SQ QC, TPA 0250SQ QC, TPA 0250SQ NOQC, TBA 1000SQ NOQC, TBA 1000SQ QC, TPA 500SQ NOMOLDEDCAP (See drawing on pages: 5-300, 6-4)					
020	2751788-0000		1	CRADLE	
030	449190-0000		4	SHAFT	
070	1478928-0000		4	BUSHING	
090	1285023-0000		1	SIDE PLATE	
100	1285022-0000		1	SIDE PLATE	
300	315105-0153		4	WASHER BRB 6,4X12 RFR	
TBA 0200SQ, TBA 0250SQ (See drawing on pages: 5-302, 6-6)					
020	2751788-0000		1	CRADLE	
030	449190-0000		4	SHAFT	
070	1478928-0000		4	BUSHING	
090	1285023-0000		1	SIDE PLATE	
100	1285022-0000		1	SIDE PLATE	
TBA 0250B (See drawing on pages: 5-300, 6-4)					
030	449190-0000		4	SHAFT	
070	1478928-0000		4	BUSHING	
TBA 0500B QC (See drawing on pages: 5-300, 6-4)					
020	2751788-0000		1	CRADLE	
030	449190-0000		4	SHAFT	
070	1478928-0000		4	BUSHING	
090	2605993-0000		1	SIDE PLATE	
100	2605994-0000		1	SIDE PLATE	
TBA 0500SQ QC (See drawing on pages: 5-300, 6-4)					
020	2751788-0000		1	CRADLE	
030	449190-0000		4	SHAFT	
070	1478928-0000		4	BUSHING	
090	2854964-0000		1	SIDE PLATE	
100	2854963-0000		1	SIDE PLATE	
300	315105-0153		4	WASHER BRB 6,4X12 RFR	
TBA 1000B QC (See drawing on pages: 5-300, 6-4)					
020	2751788-0000		1	CRADLE	
030	449190-0000		4	SHAFT	
070	1478928-0000		4	BUSHING	
090	1285023-0000		1	SIDE PLATE	
100	1285022-0000		1	SIDE PLATE	
TBA 1000S LIGHTCAP (See drawing on pages: 5-300, 6-4)					
020	2748115-0000		1	CRADLE	

Machine Type | Group Description | Used-In | Group Number | Page No

DROP CHUTE CRADLE

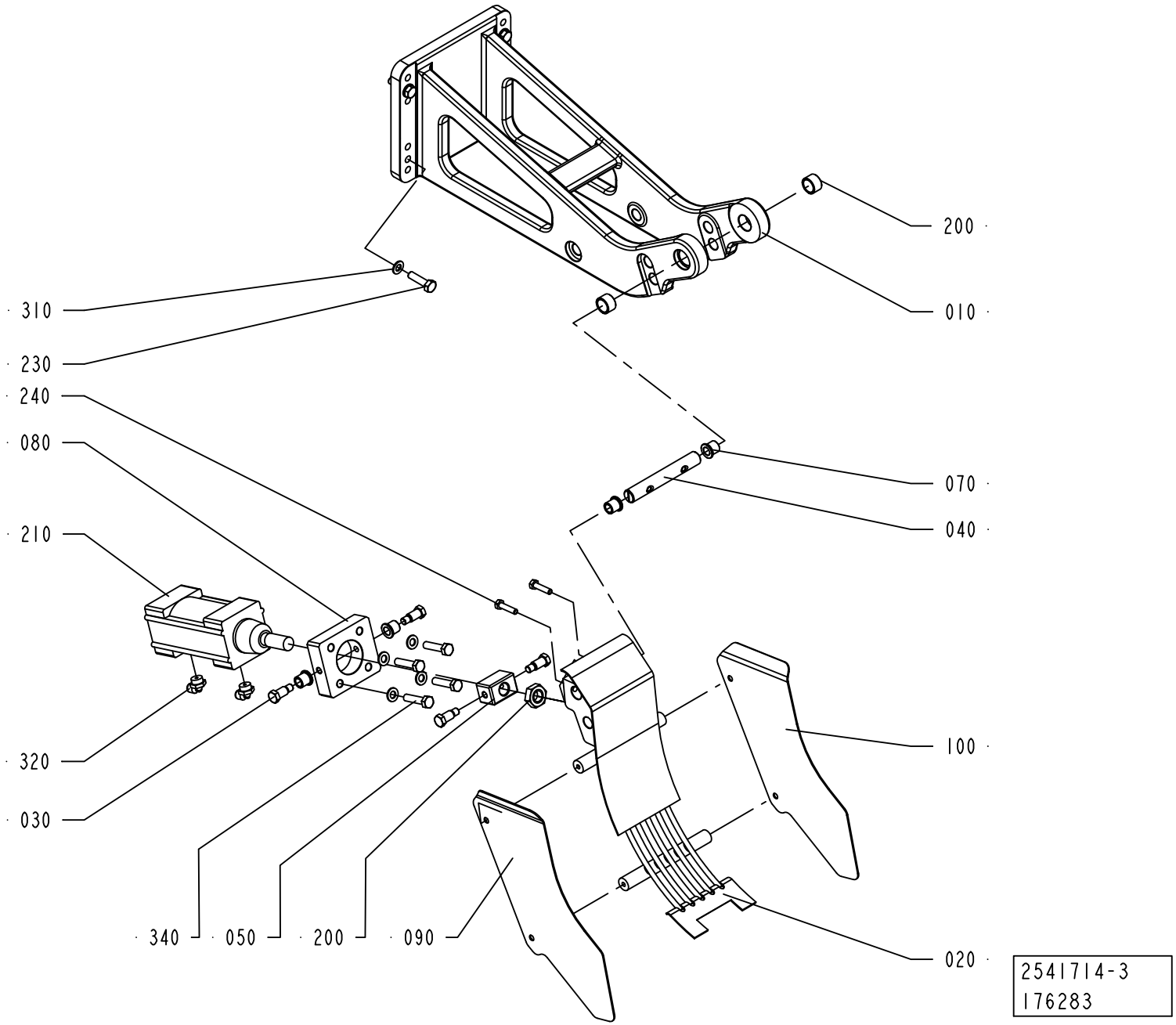

ECM: 389638 - 20090701
Group number: 2541714-0100
Assembly Drawing: 2541714-3_1_AA

This list covers pages from 5-300 to 5-303

Pos	Part No	UN	Qty	Description	Page No
TBA 1000S LIGHTCAP (Cont'd) (See drawing on pages: 5-300, 6-4)					
030	449190-0000		4	SHAFT	
070	1478928-0000		4	BUSHING	
090	1285023-0000		1	SIDE PLATE	
100	1285022-0000		1	SIDE PLATE	
300	315105-0153		4	WASHER BRB 6,4X12 RFR	
Common Parts					
010	2540823-0000		1	BRACKET	
040	1144579-0000		1	AXLE	
050	1144577-0000		1	BLOCK	
080	2594886-0000		1	PLATE	
200	321116-0234		2	BEARING BUSH W/O FLANGE, 16X20X12 MM	
210	90600-5800		1	DOUBLE ACTING, PROFILE,CYL 50-25	
230	312105-0455		4	SCREW M6S ISO 4017 M8X30 A480	
240	312105-0372		2	SCREW M6S ISO 4017 M6X25 A480	
310	315105-0165		8	WASHER BRB 8,4X16 RFR	
320	90458-2957		2	ELBOW PIPE JOINT, EXT.THREAD, D=6MM-G1/4	
340	312105-0457		4	SCREW M6S ISO 4014 M8X35 A480	

Pos	Part No	UN	Qty	Description	Page No

This page is intentionally left blank.

ECM: 343882 - 20080702
Group number: 1517298-0250
Assembly Drawing:

Pos	Part No	UN	Qty	Description	Page No
TBA 0200M, TBA 0200B, TBA 0200SQ, TBA 0200S, TBA 0250S, TBA 0250B, TBA 0500S, TBA 0500SQ, TBA 0500B, TBA 1000B, TBA 1000SQ, TBA 1000S, TPA 0330SQ, TPA 0250SQ, TPA 0200SQ, TPA 0500SQ, TBA 0250SQ					
010	1517299-0250		1	INFEED CONVEYOR LONG	**5-307**
TBA 1500S, TPA 1000SQ, TPA 0750SQ					
020	1517300-0350		1	INFEED CONVEYOR SHORT	**5-313**
TBA 1890S, TBA 2000S, TBA 1400B					
030	2678710-0150		1	INFEED CONVEYOR SHORT	**5-315**

Pos	Part No	UN	Qty	Description	Page No

Machine Type | Group Description | Used-In | Group Number | Page No

INFEED CONVEYOR LONG

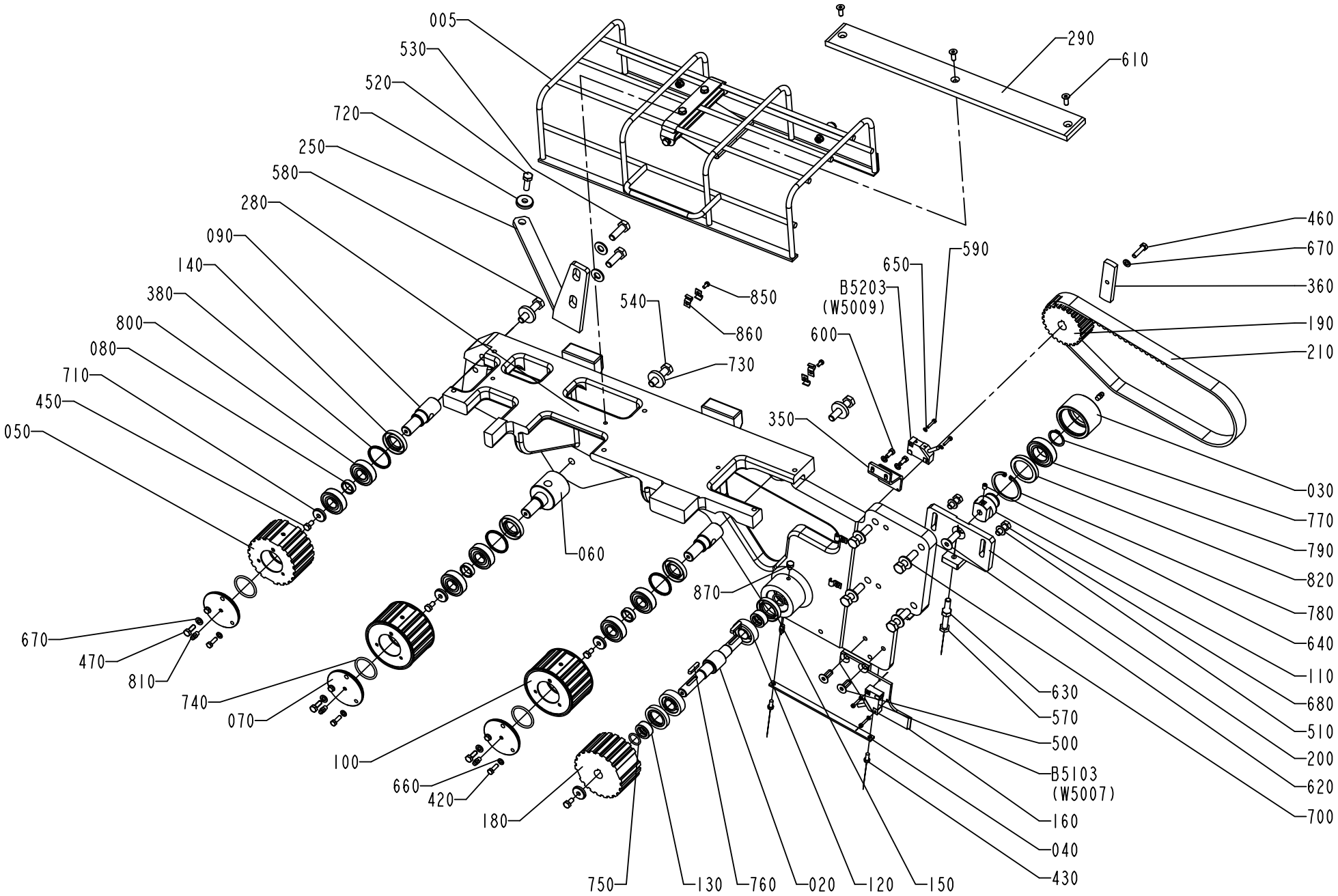

ECM: 387948 - 20090227
Group number: 1517299-0250
Assembly Drawing: 1517299-1_1_AC

Pos	Part No	UN	Qty	Description	Page No
A3/FLEX					
360	1347410-0000		1	ACTIVATOR	
590	312115-0228		2	SCREW ISO4762 M3X16 A4 80	
650	315105-0124		2	WASHER BRB 3,2X6 RFR	
Common Parts					
005	1144645-0200		1	PROTECTIVE COVER	**5-309, 5-311**
020	1144470-0000		1	SHAFT	
030	2958240-0000		1	ROLLER	
040	1144593-0000		1	PLATE	
050	2952684-0000		1	TOOTHED PULLEY	
060	2852228-0000		1	ECCENTRIC SHAFT	
070	2955104-0000		3	PLUG	
080	1144597-0000		3	SPACER	
090	1484620-0000		2	SHAFT	
100	2952685-0000		2	TOOTHED PULLEY	
110	2958241-0000		1	SHAFT	
120	90214-0219		2	CYL.ROLLER BEARING, 17X40X12 MM	
130	1144625-0000		2	SPACER	
140	90091-0440		3	RADIAL SEAL 22X40X7 MM DUST LIP	
150	1498068-0000		2	SEAL RING	
160	2610764-0000		1	PLATE	
180	1144784-0000		1	TOOTHED PULLEY	
190	1144788-0000		1	TOOTHED PULLEY	
200	1144794-0000		1	SUPPORT	
210	1144841-0000		1	TIMING BELT	
250	2552445-0000		1	SUPPORT	
280	1347699-0000		1	PLATE	
290	1260941-0000		1	SLIDE	
350	1279688-0000		1	SUPPORT	
380	2850481-0000		3	SPACER	
420	312105-0329		6	SCREW M6S ISO 4017 M5X16 A480	
430	312105-0327		2	SCREW M6S ISO 4017 M5X12 A480	
450	312105-0366		4	SCREW M6S ISO 4017 M6X12 A480	
460	312105-0372		1	SCREW M6S ISO 4017 M6X25 A480	
470	312105-0368		3	SCREW M6S ISO 4017 M6X16 A480	
500	312155-0449		2	SCREW DIN 7991 MF6S M8X16 A4 70	
510	312105-0451		2	SCREW M6S ISO 4017 M8X20 A480	
530	312105-0495		3	SCREW M6S ISO 4017 M10X30 A480	
540	312109-0499		5	SCREW M6S ISO 4017 M10X40 A480	
570	312109-0463		1	SCREW M6S ISO 4017 M8X60 A480	
580	312109-0500		2	SCREW M6S ISO 4017 M10X45 A480	
600	312125-0327		2	SCREW ISO 1207 M5X12 A4	
610	312155-0368		3	SCREW DIN 7991 MF6S M6X16 A4 70	
620	312155-0495		1	SCREW DIN 7991 MF6S M10X30 A4 70	
630	312605-0318		1	HEXAGON NUT, M6M M8 A280	
640	312318-0362		1	SCREW ISO4029 M6X8 A4	
660	315105-0146		8	WASHER BRB 5,3X10 RFR	
670	315105-0153		4	WASHER BRB 6,4X12 RFR	
680	315105-0165		2	WASHER BRB 8,4X16 RFR	
700	315105-0173		6	WASHER BRB 10,5X22 RFR	
710	315125-0153		5	WASHER TBRSB 6,4X22X4 A4	
730	315125-0173		4	WASHER TBRSB 10,5X28X6 A4	
740	315202-0221		3	O-RING 34,2X3 MM	
750	315202-0267		2	O-RING 16,3X2,4 MM	
760	315705-0202		2	PARALLEL KEY W ROUND ENDS 5X5X25MM	
770	315751-0119		1	RETAINING RING FOR SHAFT DIN 471 25 SS	
780	90141-0019		1	RETAINING RING FOR BORE DIN 472 50 A2	
790	321306-0105		1	BALL BEARING, 25X47X12 MM	
800	321309-0103		6	BALL BEARING, 17X40X12 MM	
810	344502-0021		5	GREASE NIPPLE STRAIGHT M6	
820	90091-0297		1	RADIAL SEAL 35X47X7 MM DUST LIP	
830	90296-0068		1	SHELL ALVANIA GREASE EP 2	
840	315105-0136		6	WASHER BRB 4,3X8 RFR	
850	312125-0287		6	SCREW ISO 1207 M4X8 A4	
860	90165-0057		6	PIPE CLIP FOR TUBE D=6 MM	
870	312105-0362		1	SCREW M6S ISO 4017 M6X8 A480	
900	316810-0106		2	PIPE CLIP FOR TUBE D=8 MM	
B5203	90044-0194		1	PROX.SW. IN5329/IN3002-BPKG(EX90044-104)	

Machine Type	Group Description	Used-In	Group Number	Page No

PROTECTIVE COVER

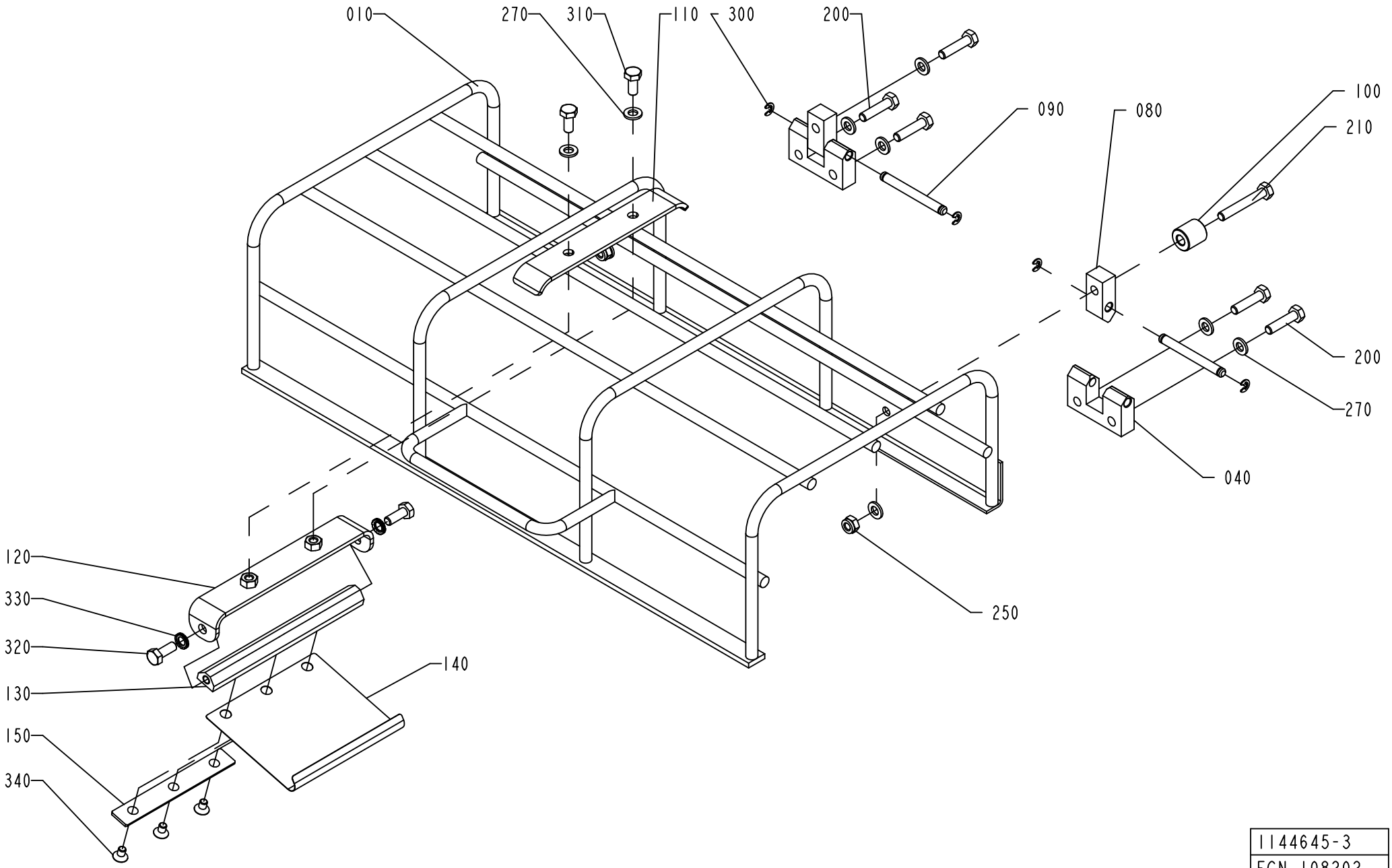

1144645-3
ECN 108202

ECM: 998084 - 20090701
Group number: 1144645-0200
Assembly Drawing: 1144645-3_1_AC

This list covers pages from 5-308 to 5-311

Pos	Part No	UN	Qty	Description	Page No
A3/FLEX TBA 0200S (See drawing on page: 5-308)					
110	1499476-0000		1	HOLDER	
120	2527792-0000		1	SUPPORT	
130	2527793-0000		1	SHAFT	
140	2767621-0000		1	SPRING	
150	2540612-0000		1	PLATE	
270	315105-0153		9	WASHER BRB 6,4X12 RFR	
310	312105-0367		2	SCREW M6S ISO 4017 M6X14 A480	
320	312105-0368		2	SCREW M6S ISO 4017 M6X16 A480	
330	90062-0061		2	LOCK WASHER NORD-LOCK,6,5/10,8, T=2,2	
340	312155-0323		3	SCREW DIN 7991 MF6S M5X8 A4 70	
A3/FLEX TBA 0500B, A3/FLEX TBA 1000B, A3/FLEX TBA 1000SQ, A3/FLEX TBA 0500SQ (See drawing on page: 5-310)					
110	1499476-0000		2	HOLDER	
120	2527792-0000		2	SUPPORT	
130	2527793-0000		2	SHAFT	
140	2530418-0000		1	SPRING	
150	2540612-0000		2	PLATE	
270	315105-0153		11	WASHER BRB 6,4X12 RFR	
310	312105-0367		4	SCREW M6S ISO 4017 M6X14 A480	
320	312105-0368		4	SCREW M6S ISO 4017 M6X16 A480	
330	90062-0061		4	LOCK WASHER NORD-LOCK,6,5/10,8, T=2,2	
340	312155-0323		6	SCREW DIN 7991 MF6S M5X8 A4 70	
A3/FLEX TBA 1000S, A3/FLEX TPA 1000SQ, A3/FLEX TBA 1500S, A3/FLEX TBA 0200B, A3/FLEX TBA 0250B, A3/FLEX TBA 0330S, A3/FLEX TPA 0330SQ, A3/FLEX TPA 0500SQ, A3/FLEX TBA 0200M, A3/FLEX TBA 0250S, A3/FLEX TBA 0500S, A3/FLEX TPA 0250SQ, A3/FLEX TPA 0200SQ, A3/FLEX TPA 0750SQ, A3/FLEX TBA 0200SQ, A3/FLEX TBA 0250SQ (See drawing on page: 5-308)					
110	1499476-0000		1	HOLDER	
120	2527792-0000		1	SUPPORT	
130	2527793-0000		1	SHAFT	
140	2530418-0000		1	SPRING	
150	2540612-0000		1	PLATE	
270	315105-0153		9	WASHER BRB 6,4X12 RFR	
310	312105-0367		2	SCREW M6S ISO 4017 M6X14 A480	
320	312105-0368		2	SCREW M6S ISO 4017 M6X16 A480	
330	90062-0061		2	LOCK WASHER NORD-LOCK,6,5/10,8, T=2,2	
340	312155-0323		3	SCREW DIN 7991 MF6S M5X8 A4 70	
Common Parts					
010	2895564-0000		1	PROTECTION	
040	1144667-0000		2	HINGE	
080	1144668-0000		2	HINGE	
090	1144669-0000		2	PIN	
100	1360149-0000		1	SPACER	
200	312105-0372		5	SCREW M6S ISO 4017 M6X25 A480	
210	312105-0379		1	SCREW M6S ISO 4014 M6X45 A480	
250	312812-0316		2	HEXAGON NUT, NY-LOCK M6 A480	
300	315755-0106		4	RETAINING RING SHAFT DIN 6799 4 A2	

Machine Type | Group Description | Used-In | Group Number | Page No

PROTECTIVE COVER

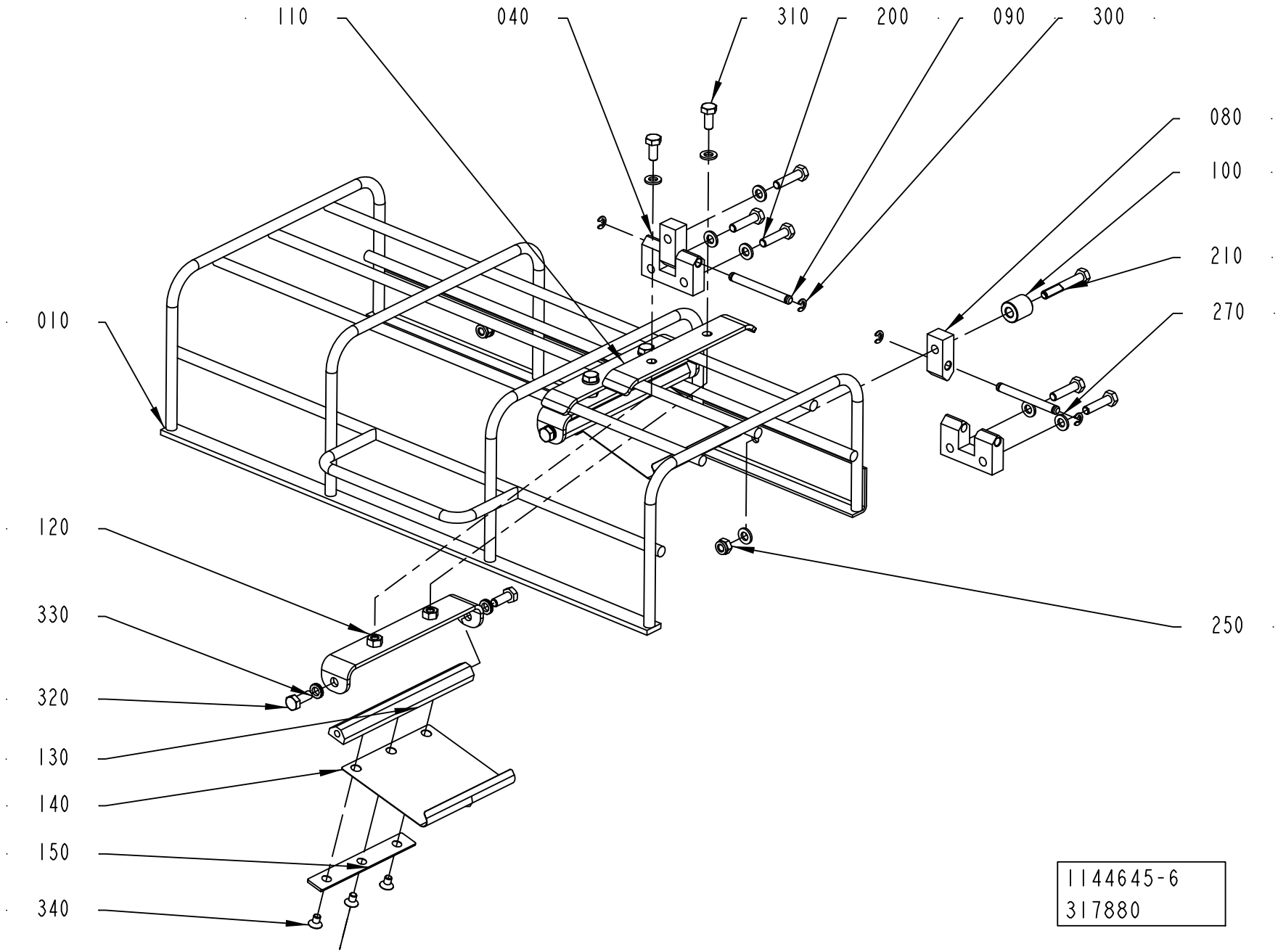

ECM: 998084 - 20090701
Group number: 1144645-0200
Assembly Drawing: 1144645-6_1_AA

This list covers pages from 5-308 to 5-311

Pos	Part No	UN	Qty	Description	Page No
A3/FLEX TBA 0200S (See drawing on page: 5-308)					
110	1499476-0000		1	HOLDER	
120	2527792-0000		1	SUPPORT	
130	2527793-0000		1	SHAFT	
140	2767621-0000		1	SPRING	
150	2540612-0000		1	PLATE	
270	315105-0153		9	WASHER BRB 6,4X12 RFR	
310	312105-0367		2	SCREW M6S ISO 4017 M6X14 A480	
320	312105-0368		2	SCREW M6S ISO 4017 M6X16 A480	
330	90062-0061		2	LOCK WASHER NORD-LOCK,6,5/10,8, T=2,2	
340	312155-0323		3	SCREW DIN 7991 MF6S M5X8 A4 70	
A3/FLEX TBA 0500B, A3/FLEX TBA 1000B, A3/FLEX TBA 1000SQ, A3/FLEX TBA 0500SQ (See drawing on page: 5-310)					
110	1499476-0000		2	HOLDER	
120	2527792-0000		2	SUPPORT	
130	2527793-0000		2	SHAFT	
140	2530418-0000		1	SPRING	
150	2540612-0000		2	PLATE	
270	315105-0153		11	WASHER BRB 6,4X12 RFR	
310	312105-0367		4	SCREW M6S ISO 4017 M6X14 A480	
320	312105-0368		4	SCREW M6S ISO 4017 M6X16 A480	
330	90062-0061		4	LOCK WASHER NORD-LOCK,6,5/10,8, T=2,2	
340	312155-0323		6	SCREW DIN 7991 MF6S M5X8 A4 70	
A3/FLEX TBA 1000S, A3/FLEX TPA 1000SQ, A3/FLEX TBA 1500S, A3/FLEX TBA 0200B, A3/FLEX TBA 0250B, A3/FLEX TBA 0330S, A3/FLEX TPA 0330SQ, A3/FLEX TPA 0500SQ, A3/FLEX TBA 0200M, A3/FLEX TBA 0250S, A3/FLEX TBA 0500S, A3/FLEX TPA 0250SQ, A3/FLEX TPA 0200SQ, A3/FLEX TPA 0750SQ, A3/FLEX TBA 0200SQ, A3/FLEX TBA 0250SQ (See drawing on page: 5-308)					
110	1499476-0000		1	HOLDER	
120	2527792-0000		1	SUPPORT	
130	2527793-0000		1	SHAFT	
140	2530418-0000		1	SPRING	
150	2540612-0000		1	PLATE	
270	315105-0153		9	WASHER BRB 6,4X12 RFR	
310	312105-0367		2	SCREW M6S ISO 4017 M6X14 A480	
320	312105-0368		2	SCREW M6S ISO 4017 M6X16 A480	
330	90062-0061		2	LOCK WASHER NORD-LOCK,6,5/10,8, T=2,2	
340	312155-0323		3	SCREW DIN 7991 MF6S M5X8 A4 70	
Common Parts					
010	2895564-0000		1	PROTECTION	
040	1144667-0000		2	HINGE	
080	1144668-0000		2	HINGE	
090	1144669-0000		2	PIN	
100	1360149-0000		1	SPACER	
200	312105-0372		5	SCREW M6S ISO 4017 M6X25 A480	
210	312105-0379		1	SCREW M6S ISO 4014 M6X45 A480	
250	312812-0316		2	HEXAGON NUT, NY-LOCK M6 A480	
300	315755-0106		4	RETAINING RING SHAFT DIN 6799 4 A2	

Machine Type | Group Description | Used-In | Group Number | Page No

INFEED CONVEYOR SHORT

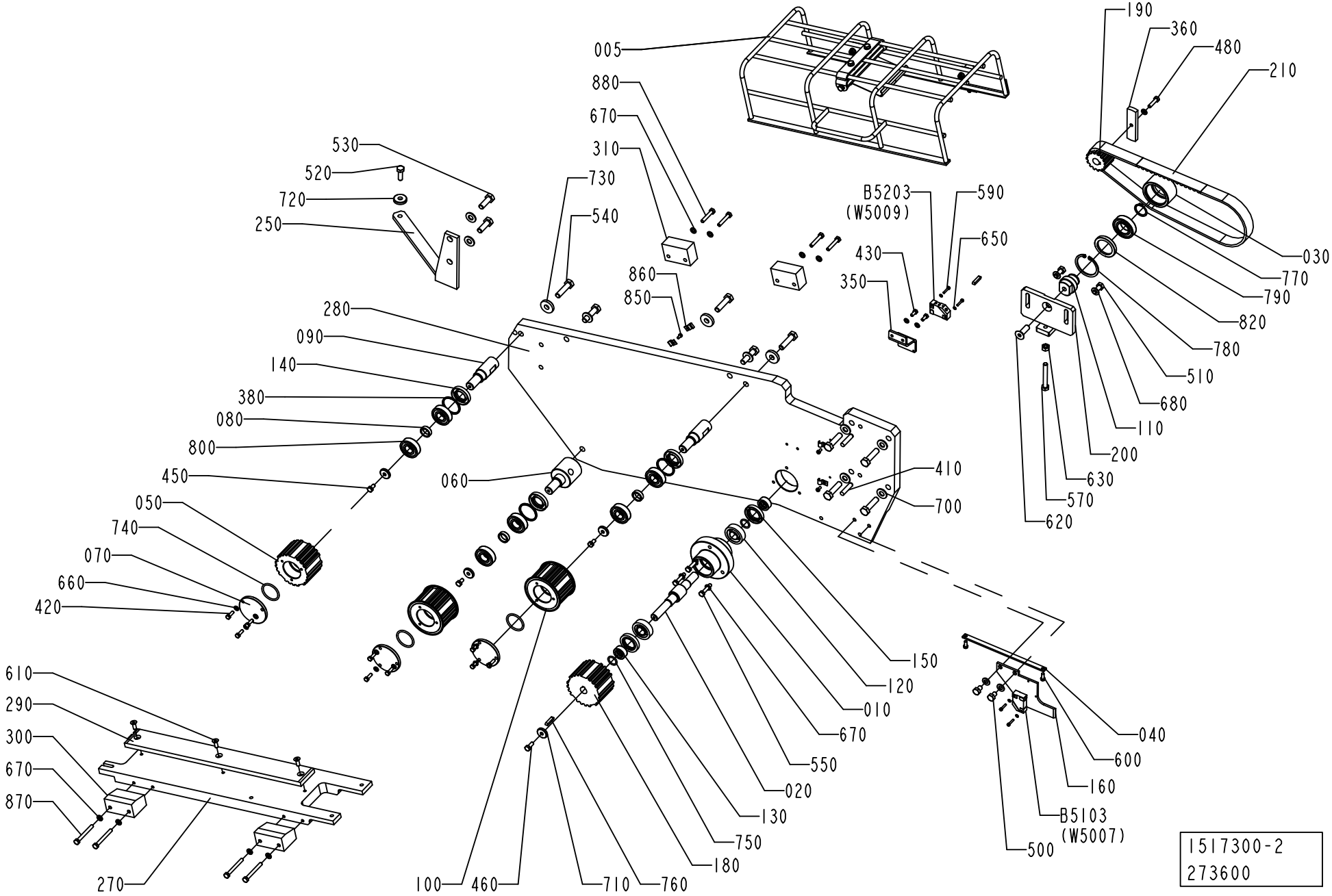

ECM: 387947 - 20090227
Group number: 1517300-0350
Assembly Drawing: 1517300-2_1_AB

Pos	Part No	UN	Qty	Description	Page No
A3/FLEX					
350	1279688-0000		1	SUPPORT	
360	1279689-0000		1	ACTIVATOR	
480	312105-0372		1	SCREW M6S ISO 4017 M6X25 A480	
590	312115-0228		2	SCREW ISO4762 M3X16 A4 80	
650	315105-0124		2	WASHER BRB 3,2X6 RFR	
670	315105-0153		15	WASHER BRB 6,4X12 RFR	
Common Parts					
005	1144645-0200		1	PROTECTIVE COVER	**5-309, 5-311**
010	2955763-0000		1	BEARING HOUSING	
020	1144470-0000		1	SHAFT	
030	2958240-0000		1	ROLLER	
040	1144593-0000		1	PLATE	
050	2952687-0000		1	TOOTHED PULLEY	
060	2852228-0000		1	ECCENTRIC SHAFT	
070	2955104-0000		3	PLUG	
080	1144597-0000		3	SPACER	
090	1144598-0000		2	SHAFT	
100	2952688-0000		2	TOOTHED PULLEY	
110	2958241-0000		1	SHAFT	
120	90214-0219		2	CYL.ROLLER BEARING, 17X40X12 MM	
130	1144625-0000		2	SPACER	
140	90091-0440		3	RADIAL SEAL 22X40X7 MM DUST LIP	
150	1498068-0000		2	SEAL RING	
160	2610764-0000		1	PLATE	
180	927859-0000		1	TOOTHED PULLEY	
190	1282681-0000		1	TOOTHED PULLEY	
200	1144794-0000		1	SUPPORT	
210	1144841-0000		1	TIMING BELT	
250	2572563-0000		1	SUPPORT	
270	1348957-0000		1	BRACKET	
280	2547187-0000		1	PLATE	
290	1348963-0000		1	SLIDE	
300	1285956-0000		2	BLOCK	
310	1285955-0000		2	PLATE	
380	2850481-0000		3	SPACER	
410	311103-0407		2	PARALLEL PIN ISO 2338 8M6X35 A1	
420	312105-0329		6	SCREW M6S ISO 4017 M5X16 A480	
430	312105-0327		2	SCREW M6S ISO 4017 M5X12 A480	
450	312105-0366		3	SCREW M6S ISO 4017 M6X12 A480	
460	312105-0368		4	SCREW M6S ISO 4017 M6X16 A480	
500	312155-0449		2	SCREW DIN 7991 MF6S M8X16 A4 70	
510	312105-0451		2	SCREW M6S ISO 4017 M8X20 A480	
530	312105-0495		3	SCREW M6S ISO 4017 M10X30 A480	
540	312109-0499		9	SCREW M6S ISO 4017 M10X40 A480	
550	312109-0374		3	SCREW M6S ISO 4017 M6X30 A480	
570	312109-0463		1	SCREW M6S ISO 4017 M8X60 A480	
600	312125-0327		2	SCREW ISO 1207 M5X12 A4	
610	312155-0368		3	SCREW DIN 7991 MF6S M6X16 A4 70	
620	312155-0495		1	SCREW DIN 7991 MF6S M10X30 A4 70	
630	312605-0318		1	HEXAGON NUT, M6M M8 A280	
660	315105-0146		8	WASHER BRB 5,3X10 RFR	
680	315105-0165		2	WASHER BRB 8,4X16 RFR	
690	312318-0362		1	SCREW ISO4029 M6X8 A4	
700	315105-0173		8	WASHER BRB 10,5X22 RFR	
710	315125-0153		5	WASHER TBRSB 6,4X22X4 A4	
730	315125-0173		4	WASHER TBRSB 10,5X28X6 A4	
740	315202-0221		3	O-RING 34,2X3 MM	
750	315202-0267		2	O-RING 16,3X2,4 MM	
760	315705-0202		2	PARALLEL KEY W ROUND ENDS 5X5X25MM	
770	315751-0119		1	RETAINING RING FOR SHAFT DIN 471 25 SS	
780	90141-0019		1	RETAINING RING FOR BORE DIN 472 50 A2	
790	321306-0105		1	BALL BEARING, 25X47X12 MM	
800	321309-0103		6	BALL BEARING, 17X40X12 MM	
810	344502-0021		5	GREASE NIPPLE STRAIGHT M6	
820	90091-0297		1	RADIAL SEAL 35X47X7 MM DUST LIP	
830	90296-0068		1	SHELL ALVANIA GREASE EP 2	
840	315105-0136		4	WASHER BRB 4,3X8 RFR	
850	312125-0287		4	SCREW ISO 1207 M4X8 A4	
860	90165-0057		4	PIPE CLIP FOR TUBE D=6 MM	
870	312105-0381		4	SCREW M6S ISO 4014 M6X55 A480	
880	312105-0376		4	SCREW M6S ISO 4014 M6X35 A480	
890	312105-0362		1	SCREW M6S ISO 4017 M6X8 A480	
900	316810-0106		2	PIPE CLIP FOR TUBE D=8 MM	
B5203	90044-0194		1	PROX.SW. IN5329/IN3002-BPKG(EX90044-104)	

Machine Type	Group Description	Used-In	Group Number	Page No

INFEED CONVEYOR SHORT

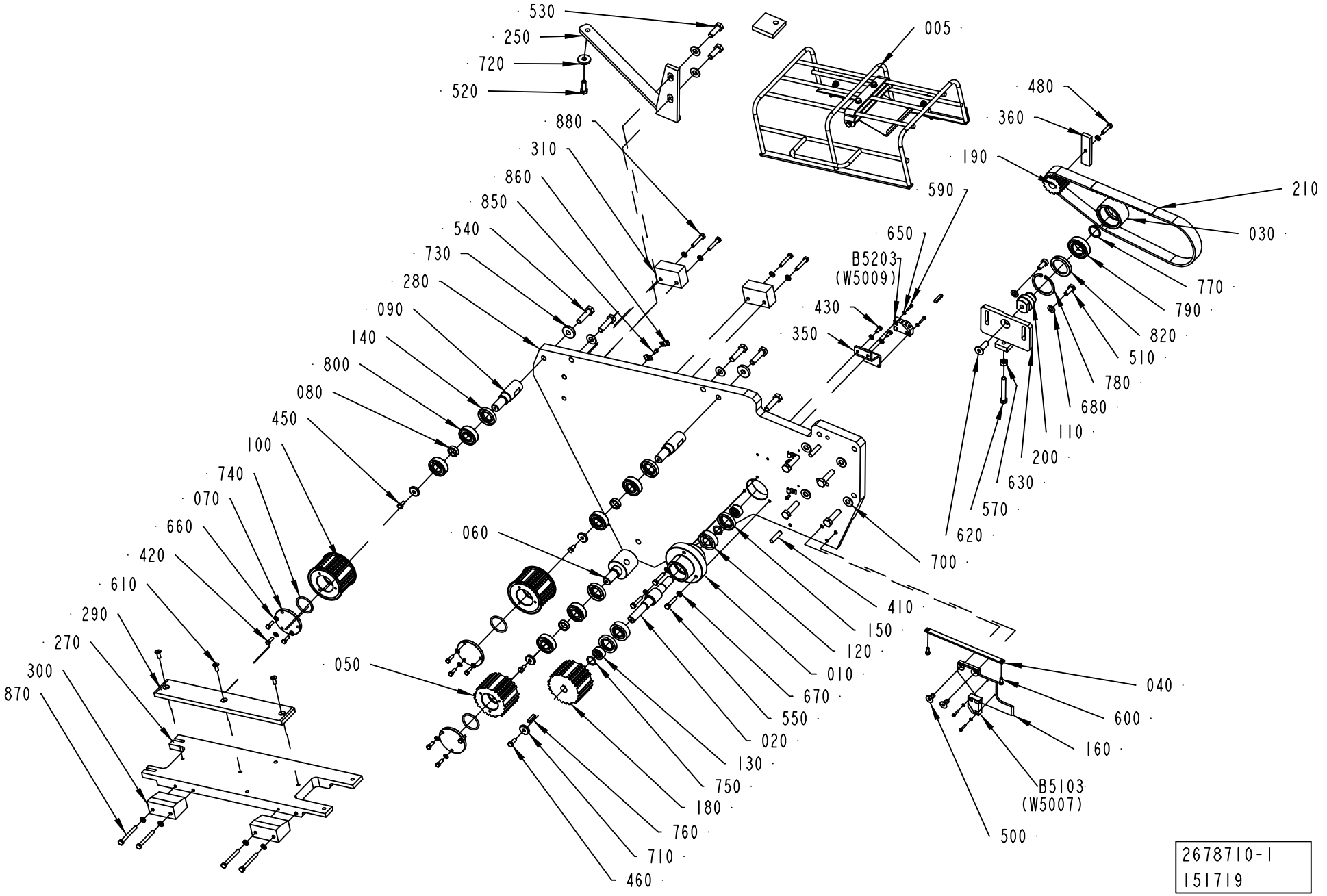

ECM: 383370 - 20090115
Group number: 2678710-0150
Assembly Drawing: 2678710-1_1_AA

Pos	Part No	UN	Qty	Description	Page No
A3/FLEX					
590	312115-0228		2	SCREW ISO4762 M3X16 A4 80	
650	315105-0124		2	WASHER BRB 3,2X6 RFR	
Common Parts					
005	2678709-0100		1	PROTECTIVE COVER	**5-317**
010	2955763-0000		1	BEARING HOUSING	
020	1144470-0000		1	SHAFT	
030	2958240-0000		1	ROLLER	
040	1144593-0000		1	PLATE	
050	2952687-0000		1	TOOTHED PULLEY	
060	2852228-0000		1	ECCENTRIC SHAFT	
070	2955104-0000		3	PLUG	
080	1144597-0000		3	SPACER	
090	1144598-0000		2	SHAFT	
100	2952688-0000		2	TOOTHED PULLEY	
110	2958241-0000		1	SHAFT	
120	90214-0219		2	CYL.ROLLER BEARING, 17X40X12 MM	
130	1144625-0000		2	SPACER	
140	90091-0440		3	RADIAL SEAL 22X40X7 MM DUST LIP	
150	1498068-0000		2	SEAL RING	
160	2610764-0000		1	PLATE	
180	927859-0000		1	TOOTHED PULLEY	
190	1282681-0000		1	TOOTHED PULLEY	
200	1144794-0000		1	SUPPORT	
210	1144841-0000		1	TIMING BELT	
250	2678708-0000		1	SUPPORT	
270	2665197-0000		1	BRACKET	
280	2678753-0000		1	PLATE	
290	2665199-0000		1	SLIDE	
300	1285956-0000		2	BLOCK	
310	1285955-0000		2	PLATE	
350	1279688-0000		1	SUPPORT	
360	1279689-0000		1	ACTIVATOR	
380	2850481-0000		3	SPACER	
410	311103-0407		2	PARALLEL PIN ISO 2338 8M6X35 A1	
420	312105-0329		6	SCREW M6S ISO 4017 M5X16 A480	
430	312105-0327		2	SCREW M6S ISO 4017 M5X12 A480	
450	312105-0366		3	SCREW M6S ISO 4017 M6X12 A480	
460	312105-0368		4	SCREW M6S ISO 4017 M6X16 A480	
480	312105-0372		1	SCREW M6S ISO 4017 M6X25 A480	
500	312155-0449		2	SCREW DIN 7991 MF6S M8X16 A4 70	
510	312105-0451		2	SCREW M6S ISO 4017 M8X20 A480	
520	312105-0495		1	SCREW M6S ISO 4017 M10X30 A480	
530	312105-0495		2	SCREW M6S ISO 4017 M10X30 A480	
540	312109-0499		9	SCREW M6S ISO 4017 M10X40 A480	
550	312109-0374		3	SCREW M6S ISO 4017 M6X30 A480	
570	312109-0463		1	SCREW M6S ISO 4017 M8X60 A480	
600	312125-0327		2	SCREW ISO 1207 M5X12 A4	
610	312155-0368		3	SCREW DIN 7991 MF6S M6X16 A4 70	
620	312155-0495		1	SCREW DIN 7991 MF6S M10X30 A4 70	
630	312605-0318		1	HEXAGON NUT, M6M M8 A280	
660	315105-0146		8	WASHER BRB 5,3X10 RFR	
670	315105-0153		15	WASHER BRB 6,4X12 RFR	
680	315105-0165		2	WASHER BRB 8,4X16 RFR	
690	312318-0362		1	SCREW ISO4029 M6X8 A4	
700	315105-0173		8	WASHER BRB 10,5X22 RFR	
710	315125-0153		4	WASHER TBRSB 6,4X22X4 A4	
720	315125-0173		1	WASHER TBRSB 10,5X28X6 A4	
730	315125-0173		3	WASHER TBRSB 10,5X28X6 A4	
740	315202-0221		3	O-RING 34,2X3 MM	
750	315202-0267		2	O-RING 16,3X2,4 MM	
760	315705-0202		2	PARALLEL KEY W ROUND ENDS 5X5X25MM	
770	315751-0119		1	RETAINING RING FOR SHAFT DIN 471 25 SS	
780	90141-0019		1	RETAINING RING FOR BORE DIN 472 50 A2	
790	321306-0105		1	BALL BEARING, 25X47X12 MM	
800	321309-0103		6	BALL BEARING, 17X40X12 MM	
810	344502-0021		5	GREASE NIPPLE STRAIGHT M6	
820	90091-0297		1	RADIAL SEAL 35X47X7 MM DUST LIP	
830	90296-0068		1	SHELL ALVANIA GREASE EP 2	
850	312125-0287		4	SCREW ISO 1207 M4X8 A4	
860	90165-0057		6	PIPE CLIP FOR TUBE D=6 MM	
870	312105-0381		4	SCREW M6S ISO 4014 M6X55 A480	
880	312105-0376		4	SCREW M6S ISO 4014 M6X35 A480	
890	312105-0362		1	SCREW M6S ISO 4017 M6X8 A480	
B5203	90044-0194		1	PROX.SW. IN5329/IN3002-BPKG(EX90044-104)	

Machine Type	Group Description	Used-In	Group Number	Page No

PROTECTIVE COVER

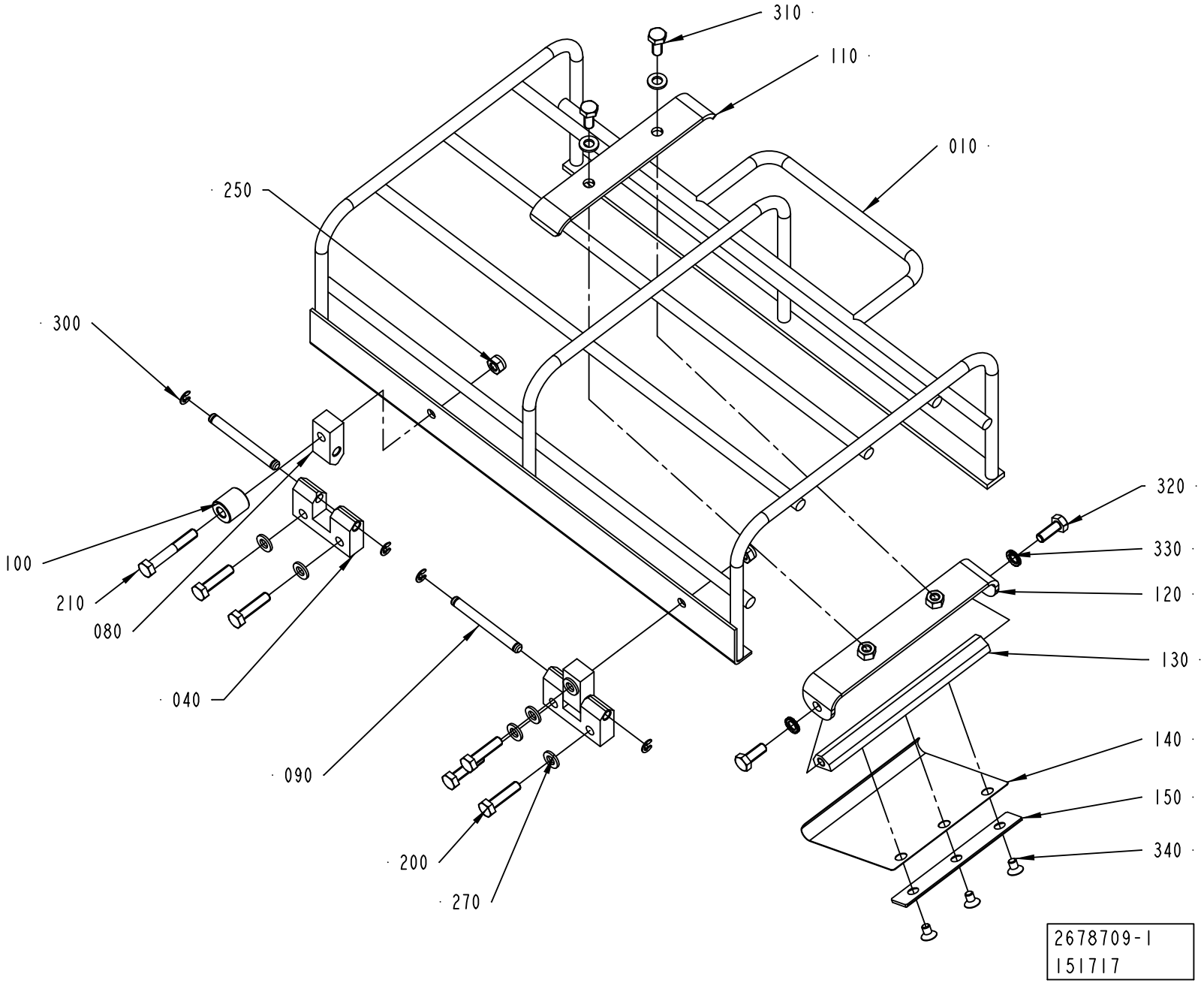

ECM: 190930 - 20041104
Group number: 2678709-0100
Assembly Drawing: 2678709-1_1_AA

Pos	Part No	UN	Qty	Description	Page No
-					
010	2665198-0000		1	PROTECTION	
040	1144667-0000		2	HINGE	
080	1144668-0000		2	HINGE	
090	1144669-0000		2	PIN	
100	1360149-0000		1	SPACER	
110	1499476-0000		1	HOLDER	
120	2527792-0000		1	SUPPORT	
130	2527793-0000		1	SHAFT	
140	2530418-0000		1	SPRING	
150	2540612-0000		1	PLATE	
200	312105-0372		5	SCREW M6S ISO 4017 M6X25 A480	
210	312105-0378		1	SCREW M6S ISO 4014 M6X40 A480	
250	312812-0316		2	HEXAGON NUT, NY-LOCK M6 A480	
270	315105-0153		9	WASHER BRB 6,4X12 RFR	
300	315755-0106		4	RETAINING RING SHAFT DIN 6799 4 A2	
310	312105-0367		2	SCREW M6S ISO 4017 M6X14 A480	
320	312105-0368		2	SCREW M6S ISO 4017 M6X16 A480	
330	90062-0061		2	LOCK WASHER NORD-LOCK,6,5/10,8, T=2,2	
340	312155-0323		3	SCREW DIN 7991 MF6S M5X8 A4 70	

Pos	Part No	UN	Qty	Description	Page No

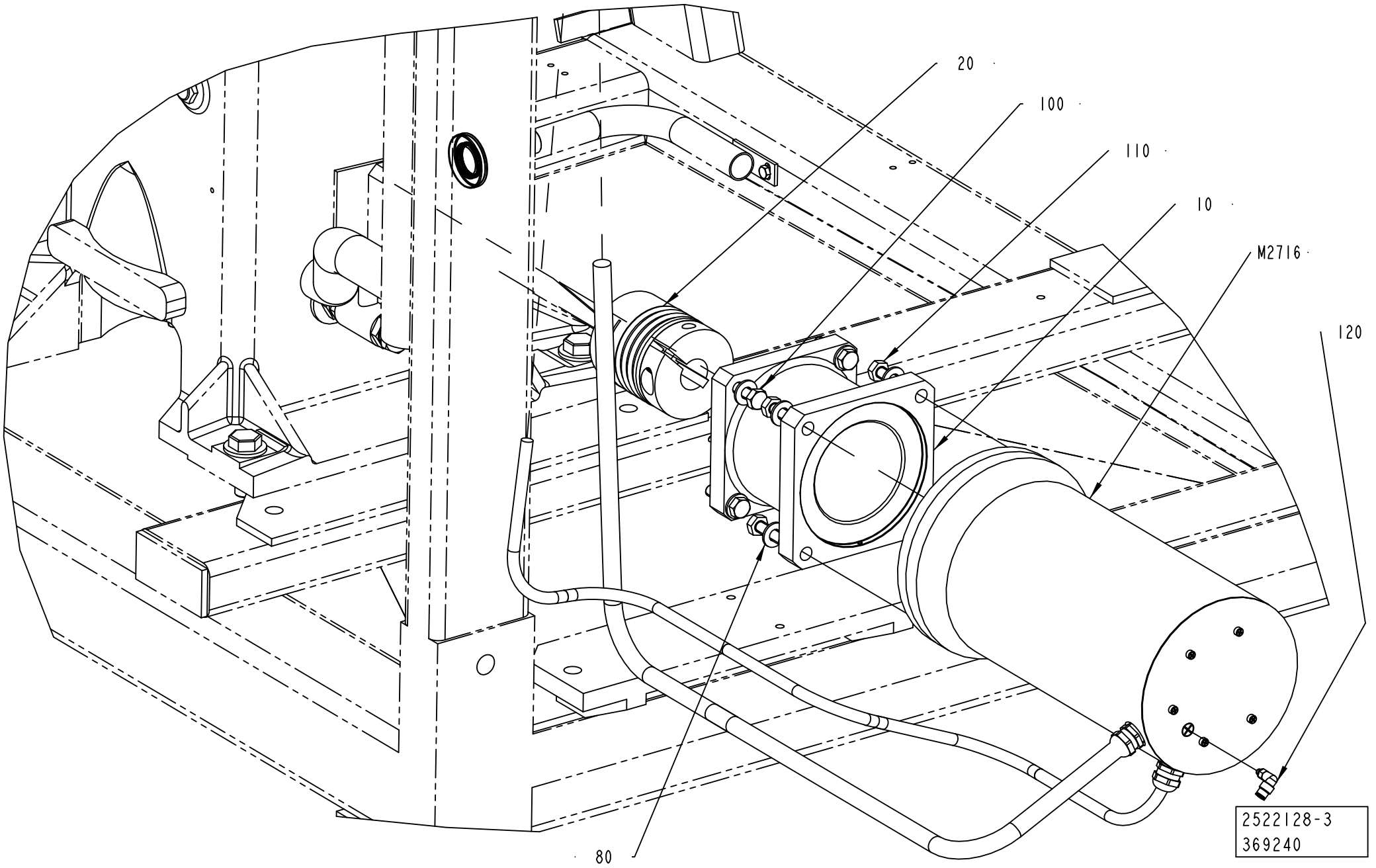
20
100
110
10
M2716
120
80
2522128-3
369240

ECM: 369240 - 20090101
Group number: 2522128-0150
Assembly Drawing: 2522128-3_1_AC

Pos	Part No	UN	Qty	Description	Page No
-					
010	2705896-0000		1	FLANGE	
020	90459-5278		1	BELLOW COUPLING, 24X28 MM	
080	315105-0173		8	WASHER BRB 10,5X22 RFR	
100	312109-0499		4	SCREW M6S ISO 4017 M10X40 A480	
110	312105-0497		4	SCREW M6S ISO 4017 M10X35 A480	
120	350002-0001		1	PUSH-IN L-FITTING QSL-F-M5-4	
M2716	90600-5611		1	SERVO MOTOR MPS-B560F-MJ52DF	

Pos	Part No	UN	Qty	Description	Page No

CRANK

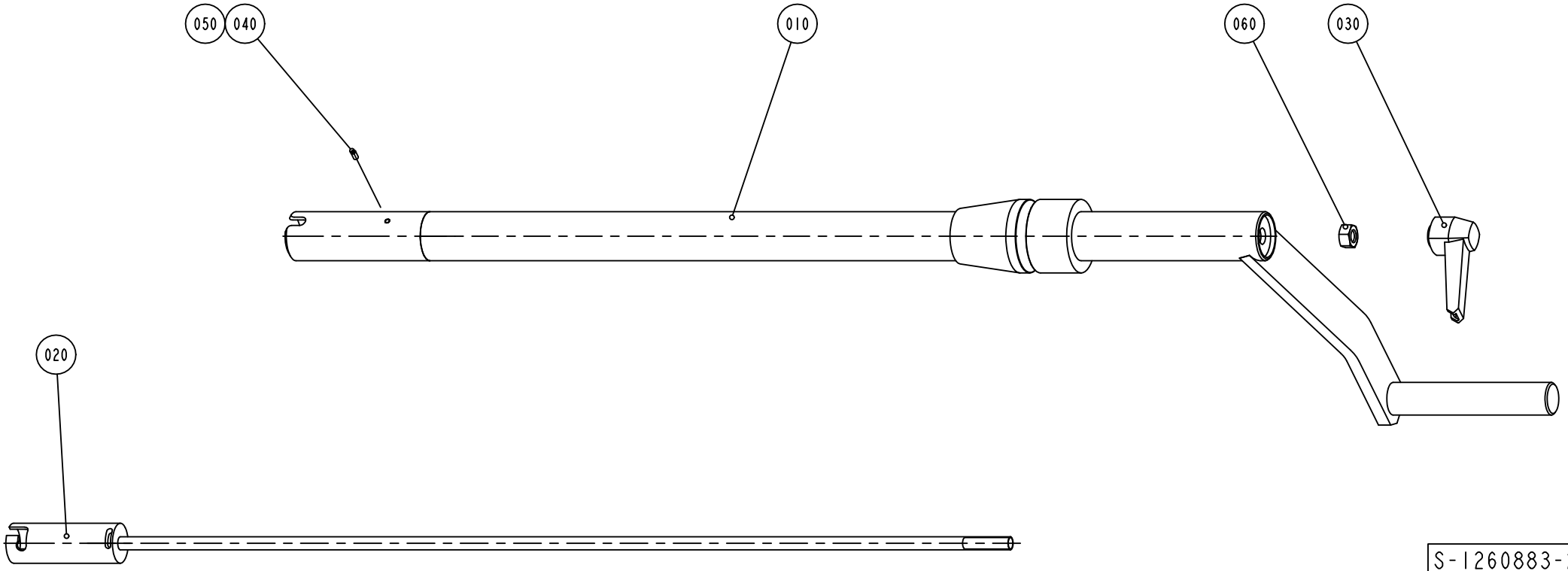

S-1260883-2
ECN 72704

ECM: 181277 - 20041104
Group number: 1260883-0200
Assembly Drawing: 1260883-2_1_AA

Pos	Part No	UN	Qty	Description	Page No
-					
010	1260712-0000		1	CRANK	
020	1140082-0000		1	LOCK SHAFT	
030	90117-0030		1	LOCKING HANDLE, M8/F	
040	90157-0016		1	LOCKING FLUID LOCTITE 242 50 ML	
050	312318-0220		1	SCREW ISO4029 M3X6 A4	
060	312605-0318		1	HEXAGON NUT, M6M M8 A280	

Pos	Part No	UN	Qty	Description	Page No

ELECTRICAL CONNECTION

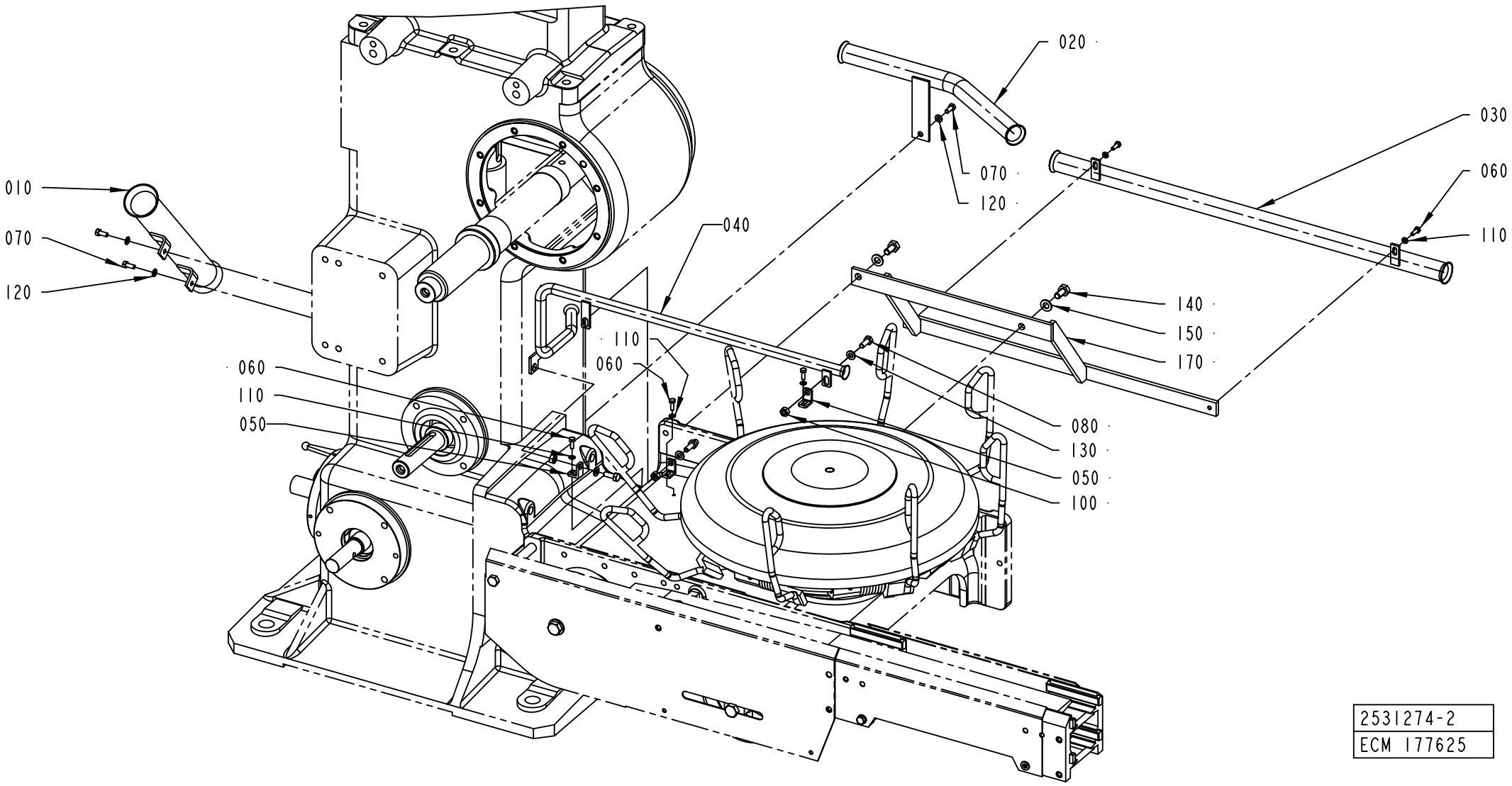

2531274-2
ECM 177625

ECM: 389637 - 20090701
Group number: 2531274-0100
Assembly Drawing: 2531274-2_1_AC

This list covers pages from 5-322 to 5-325

Pos	Part No	UN	Qty	Description	Page No
TBA 0200M, TBA 0200B, TBA 0200S, TBA 0250S, TBA 0250B, TBA 0330S, TBA 0500S, TBA 0500B, TBA 1000B, TBA 1000S, TBA 1500S (See drawing on page: 5-322)					
010	1279680-0000		1	PIPE	
020	2633439-0000		1	PIPE	
040	2693322-0000		1	PIPE	
050	2531276-0000		3	BRACKET	
060	312105-0291		5	SCREW M6S ISO 4017 M4X12 A470	
070	312105-0327		3	SCREW M6S ISO 4017 M5X12 A480	
080	312105-0367		3	SCREW M6S ISO 4017 M6X14 A480	
090	312605-0312		2	HEXAGON NUT, M6M M4 A280	
100	312605-0316		3	HEXAGON NUT, M6M M6 A280	
110	315105-0136		5	WASHER BRB 4,3X8 RFR	
120	315105-0146		3	WASHER BRB 5,3X10 RFR	
130	315105-0156		6	WASHER BRB 6,7X14 RFR	
170	2996051-0000		1	BRACKET	
TBA 0200SQ, TPA 1000SQ, TPA 0500SQ, TPA 0750SQ, TBA 0250SQ, TBA 1000SQ NOQC, TBA 0500SQ QC, TBA 1000SQ QC, TPA 0330SQ L_OUT, TPA 0250SQ L_OUT, TPA 0200SQ L_OUT (See drawing on page: 5-322)					
010	1279680-0000		1	PIPE	
020	2633439-0000		1	PIPE	
040	2693322-0000		1	PIPE	
050	2531276-0000		3	BRACKET	
060	312105-0287		3	SCREW M6S ISO 4017 M4X8 A470	
070	312105-0327		6	SCREW M6S ISO 4017 M5X12 A480	
080	312105-0367		3	SCREW M6S ISO 4017 M6X14 A480	
100	312605-0316		3	HEXAGON NUT, M6M M6 A280	
110	315105-0136		3	WASHER BRB 4,3X8 RFR	
120	315105-0146		6	WASHER BRB 5,3X10 RFR	
130	315105-0156		3	WASHER BRB 6,7X14 RFR	
140	312105-0449		2	SCREW M6S ISO 4017 M8X16 A480	
150	315105-0165		2	WASHER BRB 8,4X16 RFR	
170	2633441-0000		1	BRACKET	
TBA 1890S, TBA 2000S, TBA 1400B (See drawing on page: 5-324)					
010	1279680-0000		1	PIPE	
020	2633439-0000		1	PIPE	
040	2693322-0000		1	PIPE	
050	2531276-0000		3	BRACKET	
060	312105-0291		6	SCREW M6S ISO 4017 M4X12 A470	
070	312105-0327		3	SCREW M6S ISO 4017 M5X12 A480	
080	312105-0367		3	SCREW M6S ISO 4017 M6X14 A480	
090	312605-0312		1	HEXAGON NUT, M6M M4 A280	
100	312605-0316		3	HEXAGON NUT, M6M M6 A280	
110	315105-0136		7	WASHER BRB 4,3X8 RFR	
120	315105-0146		3	WASHER BRB 5,3X10 RFR	
130	315105-0153		6	WASHER BRB 6,4X12 RFR	
170	2728241-0000		1	BRACKET	
TPA 0330SQ R_OUT, TPA 0250SQ R_OUT, TPA 0200SQ R_OUT (See drawing on page: 5-322)					
010	1279680-0000		1	PIPE	
020	2633439-0000		1	PIPE	
040	2693322-0000		1	PIPE	
050	2531276-0000		3	BRACKET	
060	312105-0287		3	SCREW M6S ISO 4017 M4X8 A470	
070	312105-0327		6	SCREW M6S ISO 4017 M5X12 A480	
080	312105-0367		3	SCREW M6S ISO 4017 M6X14 A480	
100	312605-0316		3	HEXAGON NUT, M6M M6 A280	
110	315105-0136		3	WASHER BRB 4,3X8 RFR	
120	315105-0146		6	WASHER BRB 5,3X10 RFR	
130	315105-0156		3	WASHER BRB 6,7X14 RFR	
140	312105-0449		2	SCREW M6S ISO 4017 M8X16 A480	
150	315105-0165		2	WASHER BRB 8,4X16 RFR	
170	2996051-0000		1	BRACKET	
Common Parts					
030	2633440-0000		1	PIPE	

Machine Type | Group Description | Used-In | Group Number | Page No

ELECTRICAL CONNECTION

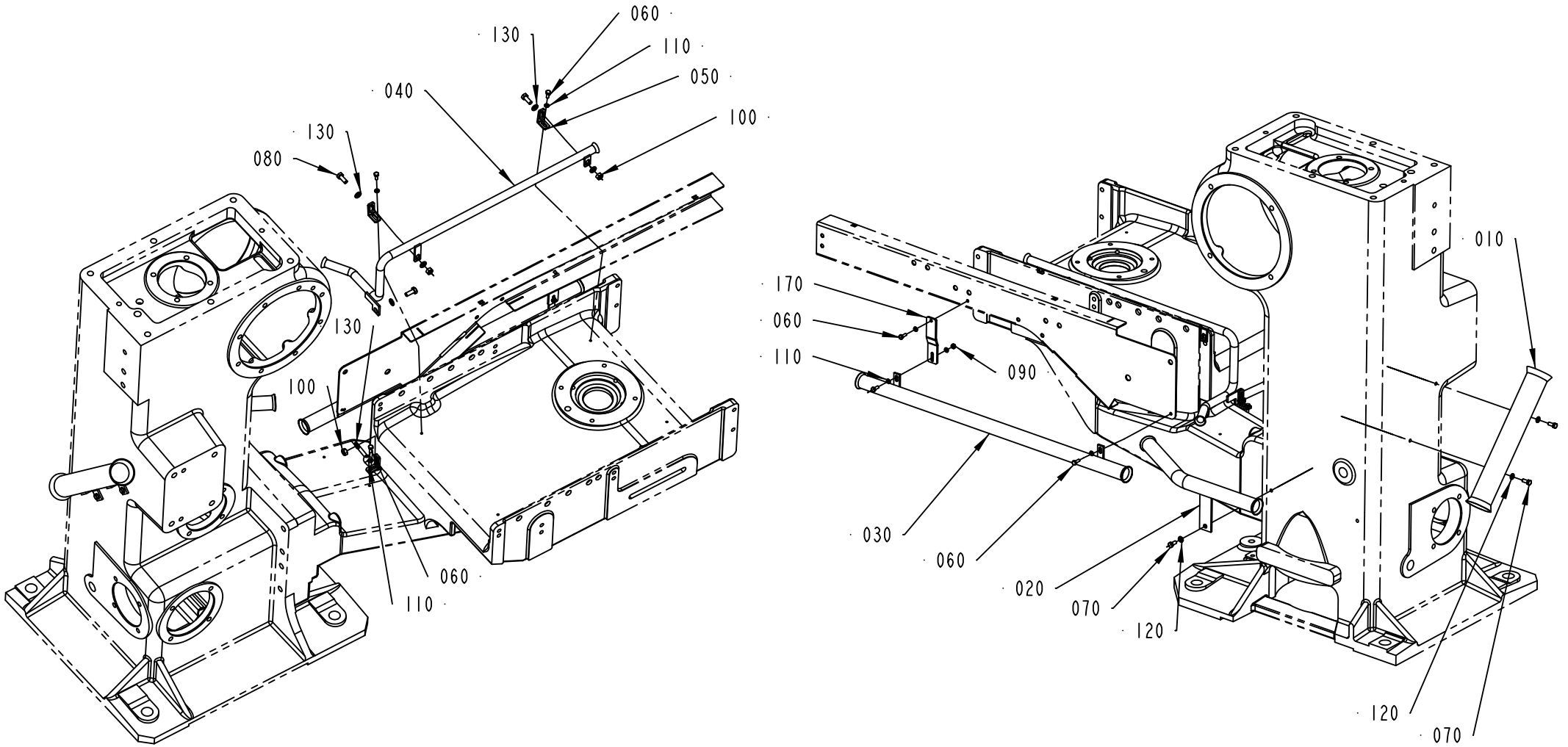

2531274-3
215731

Pos	Part No	UN	Qty	Description	Page No
TBA 0200M, TBA 0200B, TBA 0200S, TBA 0250S, TBA 0250B, TBA 0330S, TBA 0500S, TBA 0500B, TBA 1000B, TBA 1000S, TBA 1500S (See drawing on page: 5-322)					
010	1279680-0000		1	PIPE	
020	2633439-0000		1	PIPE	
040	2693322-0000		1	PIPE	
050	2531276-0000		3	BRACKET	
060	312105-0291		5	SCREW M6S ISO 4017 M4X12 A470	
070	312105-0327		3	SCREW M6S ISO 4017 M5X12 A480	
080	312105-0367		3	SCREW M6S ISO 4017 M6X14 A480	
090	312605-0312		2	HEXAGON NUT, M6M M4 A280	
100	312605-0316		3	HEXAGON NUT, M6M M6 A280	
110	315105-0136		5	WASHER BRB 4,3X8 RFR	
120	315105-0146		3	WASHER BRB 5,3X10 RFR	
130	315105-0156		6	WASHER BRB 6,7X14 RFR	
170	2996051-0000		1	BRACKET	
TBA 0200SQ, TPA 1000SQ, TPA 0500SQ, TPA 0750SQ, TBA 0250SQ, TBA 1000SQ NOQC, TBA 0500SQ QC, TBA 1000SQ QC, TPA 0330SQ L_OUT, TPA 0250SQ L_OUT, TPA 0200SQ L_OUT (See drawing on page: 5-322)					
010	1279680-0000		1	PIPE	
020	2633439-0000		1	PIPE	
040	2693322-0000		1	PIPE	
050	2531276-0000		3	BRACKET	
060	312105-0287		3	SCREW M6S ISO 4017 M4X8 A470	
070	312105-0327		6	SCREW M6S ISO 4017 M5X12 A480	
080	312105-0367		3	SCREW M6S ISO 4017 M6X14 A480	
100	312605-0316		3	HEXAGON NUT, M6M M6 A280	
110	315105-0136		3	WASHER BRB 4,3X8 RFR	
120	315105-0146		6	WASHER BRB 5,3X10 RFR	
130	315105-0156		3	WASHER BRB 6,7X14 RFR	
140	312105-0449		2	SCREW M6S ISO 4017 M8X16 A480	
150	315105-0165		2	WASHER BRB 8,4X16 RFR	
170	2633441-0000		1	BRACKET	
TBA 1890S, TBA 2000S, TBA 1400B (See drawing on page: 5-324)					
010	1279680-0000		1	PIPE	
020	2633439-0000		1	PIPE	
040	2693322-0000		1	PIPE	
050	2531276-0000		3	BRACKET	
060	312105-0291		6	SCREW M6S ISO 4017 M4X12 A470	
070	312105-0327		3	SCREW M6S ISO 4017 M5X12 A480	
080	312105-0367		3	SCREW M6S ISO 4017 M6X14 A480	
090	312605-0312		1	HEXAGON NUT, M6M M4 A280	
100	312605-0316		3	HEXAGON NUT, M6M M6 A280	
110	315105-0136		7	WASHER BRB 4,3X8 RFR	
120	315105-0146		3	WASHER BRB 5,3X10 RFR	
130	315105-0153		6	WASHER BRB 6,4X12 RFR	
170	2728241-0000		1	BRACKET	
TPA 0330SQ R_OUT, TPA 0250SQ R_OUT, TPA 0200SQ R_OUT (See drawing on page: 5-322)					
010	1279680-0000		1	PIPE	
020	2633439-0000		1	PIPE	
040	2693322-0000		1	PIPE	
050	2531276-0000		3	BRACKET	
060	312105-0287		3	SCREW M6S ISO 4017 M4X8 A470	
070	312105-0327		6	SCREW M6S ISO 4017 M5X12 A480	
080	312105-0367		3	SCREW M6S ISO 4017 M6X14 A480	
100	312605-0316		3	HEXAGON NUT, M6M M6 A280	
110	315105-0136		3	WASHER BRB 4,3X8 RFR	
120	315105-0146		6	WASHER BRB 5,3X10 RFR	
130	315105-0156		3	WASHER BRB 6,7X14 RFR	
140	312105-0449		2	SCREW M6S ISO 4017 M8X16 A480	
150	315105-0165		2	WASHER BRB 8,4X16 RFR	
170	2996051-0000		1	BRACKET	
Common Parts					
030	2633440-0000		1	PIPE	

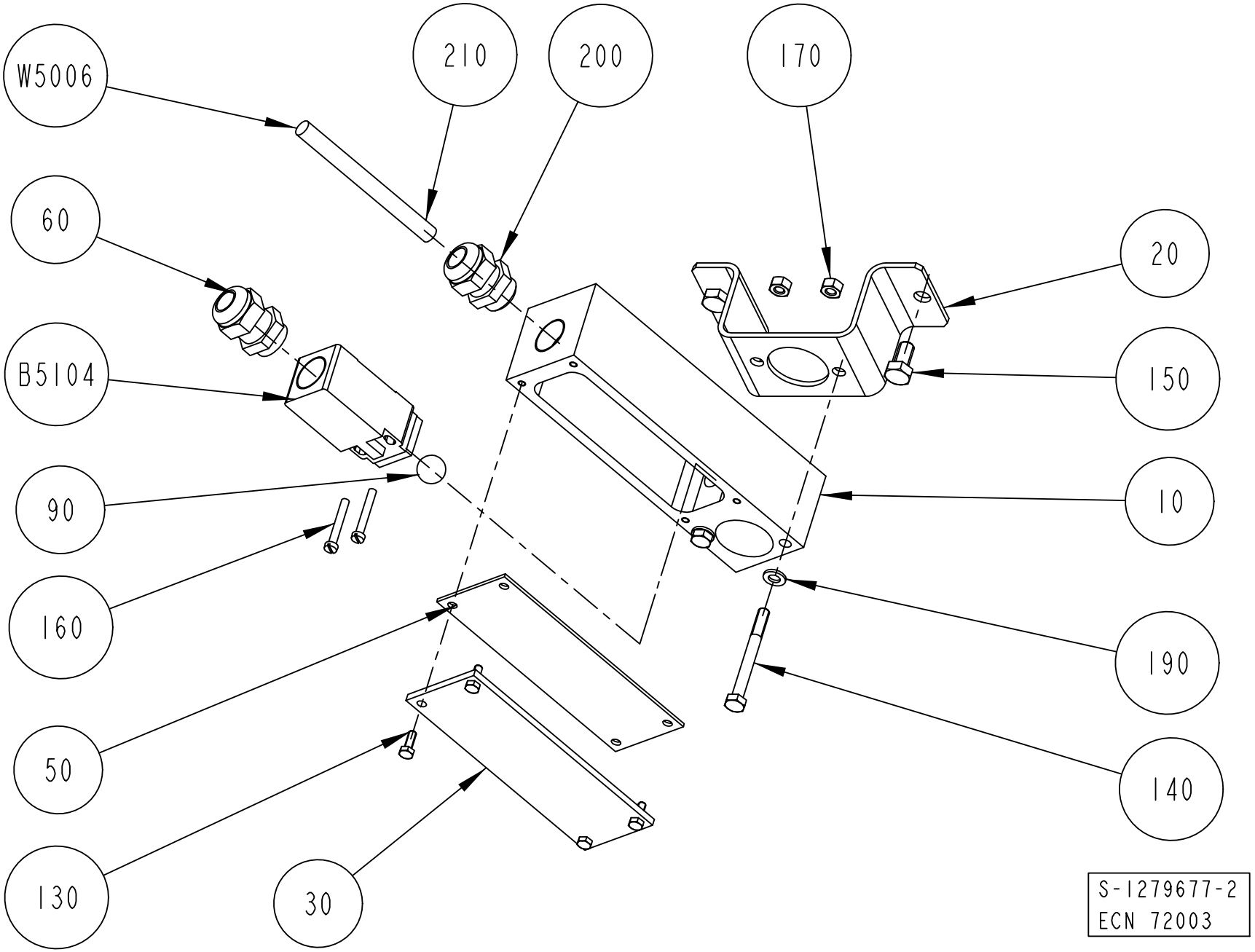
W5006
210
200
170
60
20
B5104
150
90
10
160
190
50
140
130
30
S-1279677-2
ECN 72003

ECM: 368993 - 20090101
Group number: 1279677-0100
Assembly Drawing: 1279677-2_1_AB

Pos	Part No	UN	Qty	Description	Page No
-					
010	1346307-0000		1	HOLDER	
020	1348990-0000		1	SUPPORT	
030	1348663-0000		1	PLATE	
050	1348635-0000		1	RUBBER SEAL	
060	1349020-0000		1	GLAND FITTING	
090	321390-0145		1	STEEL BALL 15MM, RB-15 RS	
130	312105-0291		4	SCREW M6S ISO 4017 M4X12 A470	
140	312105-0382		2	SCREW M6S ISO 4014 M6X60 A480	
150	312105-0449		2	SCREW M6S ISO 4017 M8X16 A480	
160	312125-0299		2	SCREW ISO 1207 M4X30 A4	
170	312812-0316		2	HEXAGON NUT, NY-LOCK M6 A480	
190	315105-0153		2	WASHER BRB 6,4X12 RFR	
200	352103-0108		1	CABLE GLAND, ST 13,5 , PR20,4/PG13,5	
210	353001-0103		4	END SLEEVE 0,75 MM2	
B 5104	1144653-0000		1	SWITCH	
W 5006	351150-0405	MM	4100	CABLE OLFLEX 5X0,75 MM2 LIGHT/GREY	

Pos	Part No	UN	Qty	Description	Page No

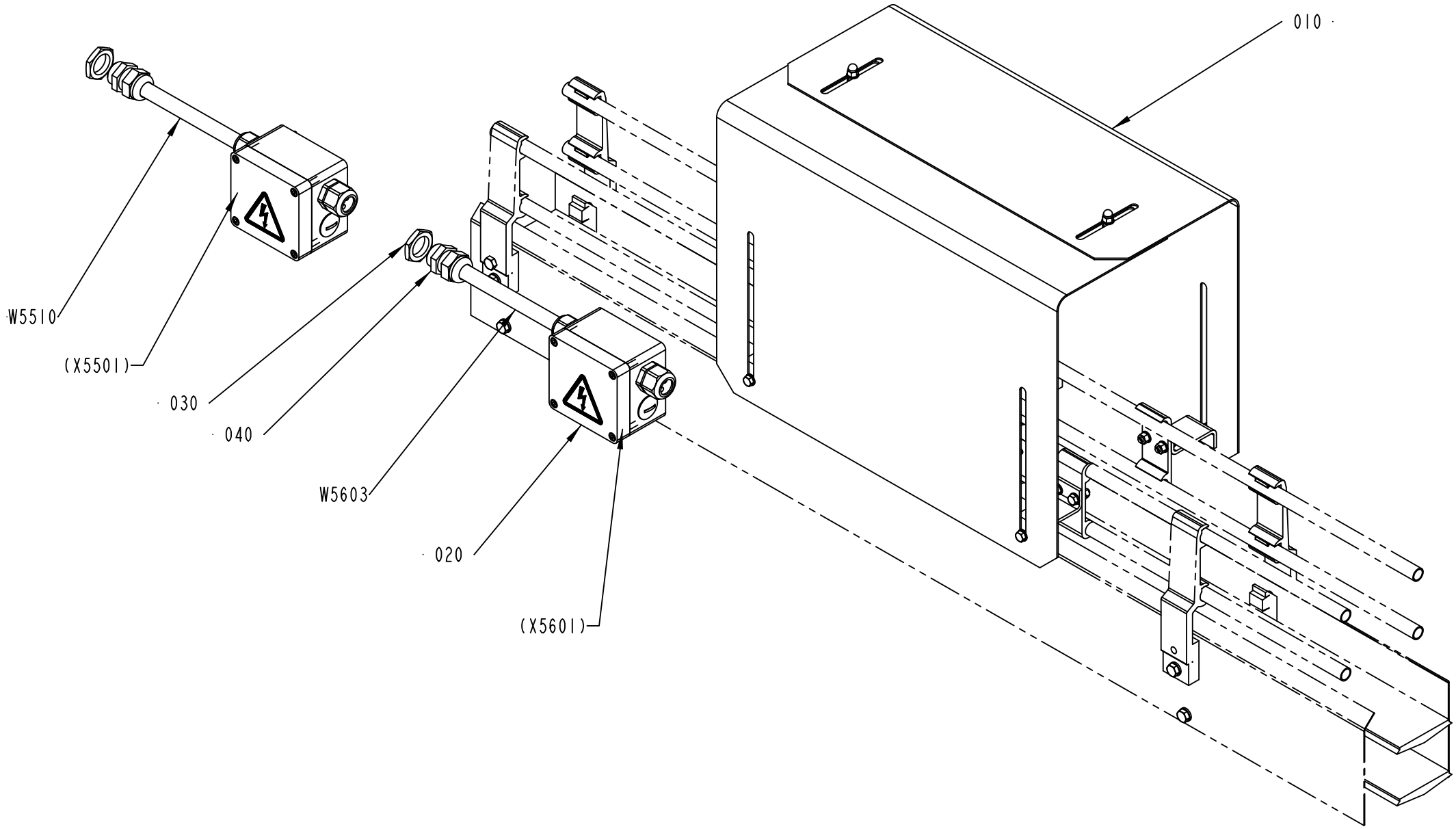

2579995-1
ECM 116811

ECM: 189522 - 20041104
Group number: 2579995-0100
Assembly Drawing: 2579995-1_1_AA

Pos	Part No	UN	Qty	Description	Page No
-					
010	1484196-0100		1	PACK COUNTER	**5-331, 6-81**
020	1484197-0100		2	CONNECTION BOX	**5-333, 6-83**
030	90099-0118		2	NUT, PR 20,4 (PG13,5)	
040	352103-0108		2	CABLE GLAND, ST 13,5 , PR20,4/PG13,5	
W5510	351150-0405	M	10	CABLE OLFLEX 5X0,75 MM2 LIGHT/GREY	
W5603	351150-0405	M	100	CABLE OLFLEX 5X0,75 MM2 LIGHT/GREY	

Pos	Part No	UN	Qty	Description	Page No

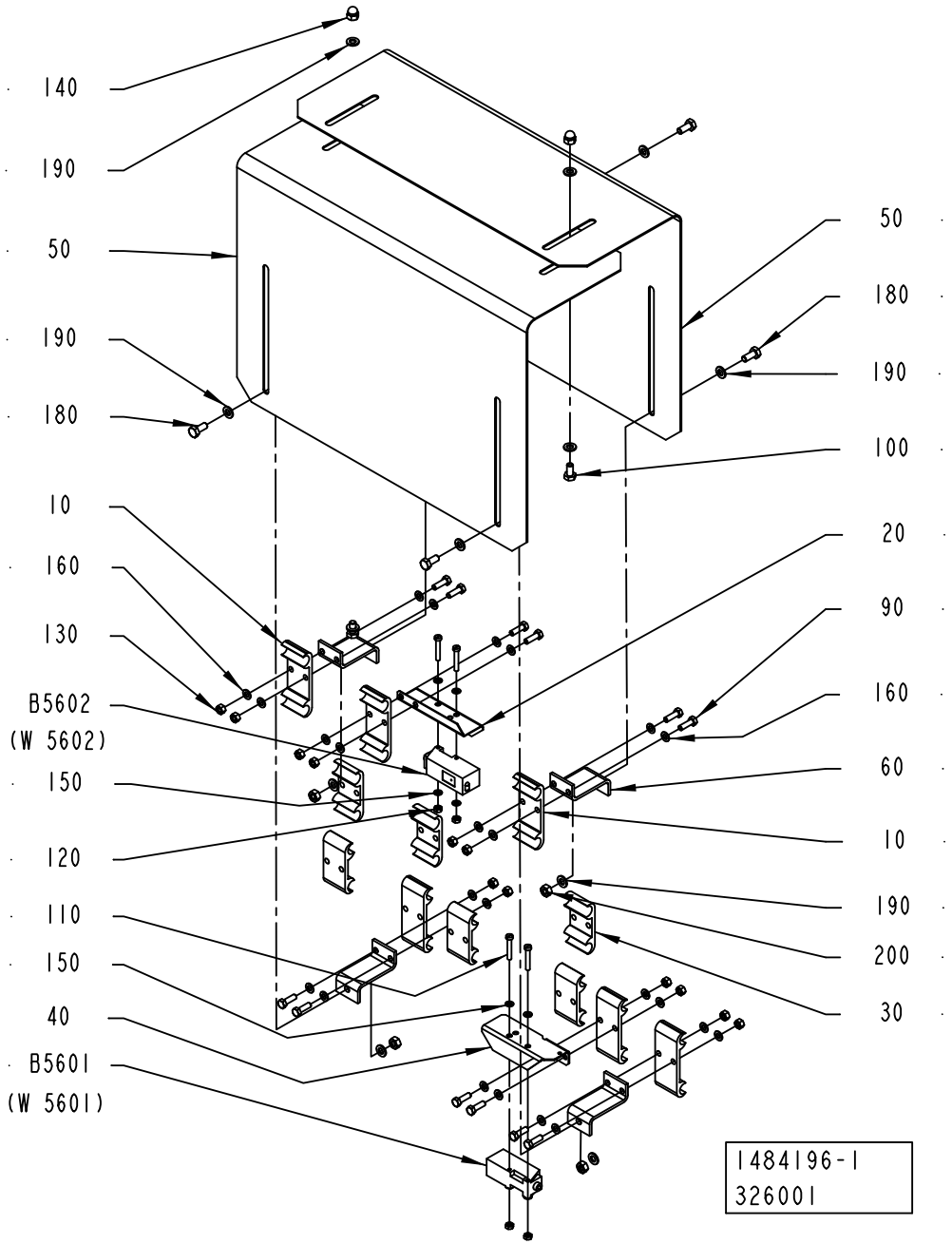
140
190
50
190
180
10
160
130
B5602
(W 5602)
150
120
110
150
40
B5601
(W 5601)
50
180
190
100
20
90
160
60
10
190
200
30
1484196-1
326001

ECM: 348338 - 20090114
Group number: 1484196-0100
Assembly Drawing: 1484196-1_1_AB

Pos	Part No	UN	Qty	Description	Page No
-					
010	1020637-0000		6	HOLDER	
020	1086889-0000		1	COVER	
030	1020638-0000		6	HOLDER	
040	1086888-0000		1	COVER	
050	1349566-0000		2	COVER	
060	1478659-0000		4	BRACKET	
090	312105-0329		12	SCREW M6S ISO 4017 M5X16 A480	
100	312105-0323		2	SCREW M6S ISO 4017 M5X8 A480	
100	312105-0366		2	SCREW M6S ISO 4017 M6X12 A480	
110	312125-0297		4	SCREW ISO 1207 M4X25 A4	
120	312605-0312		4	HEXAGON NUT, M6M M4 A280	
130	312605-0314		16	HEXAGON NUT, M6M M5 A280	
140	312705-0314		2	NUT HEX. DOMED CAP MHM-6 M5 A280	
140	312705-0316		2	NUT HEX. DOMED CAP MHM-6 M6 A280	
150	315105-0136		8	WASHER BRB 4,3X8 RFR	
160	315105-0146		24	WASHER BRB 5,3X10 RFR	
170	312105-0327		4	SCREW M6S ISO 4017 M5X12 A480	
180	312105-0367		4	SCREW M6S ISO 4017 M6X14 A480	
190	315105-0153		12	WASHER BRB 6,4X12 RFR	
200	312605-0316		4	HEXAGON NUT, M6M M6 A280	
B5601	90232-0103		1	PH.CELL E3S-CT61-L-5M	
B5602	90232-0104		1	PH.CELL E3S-CT61-D-5M	

Pos	Part No	UN	Qty	Description	Page No

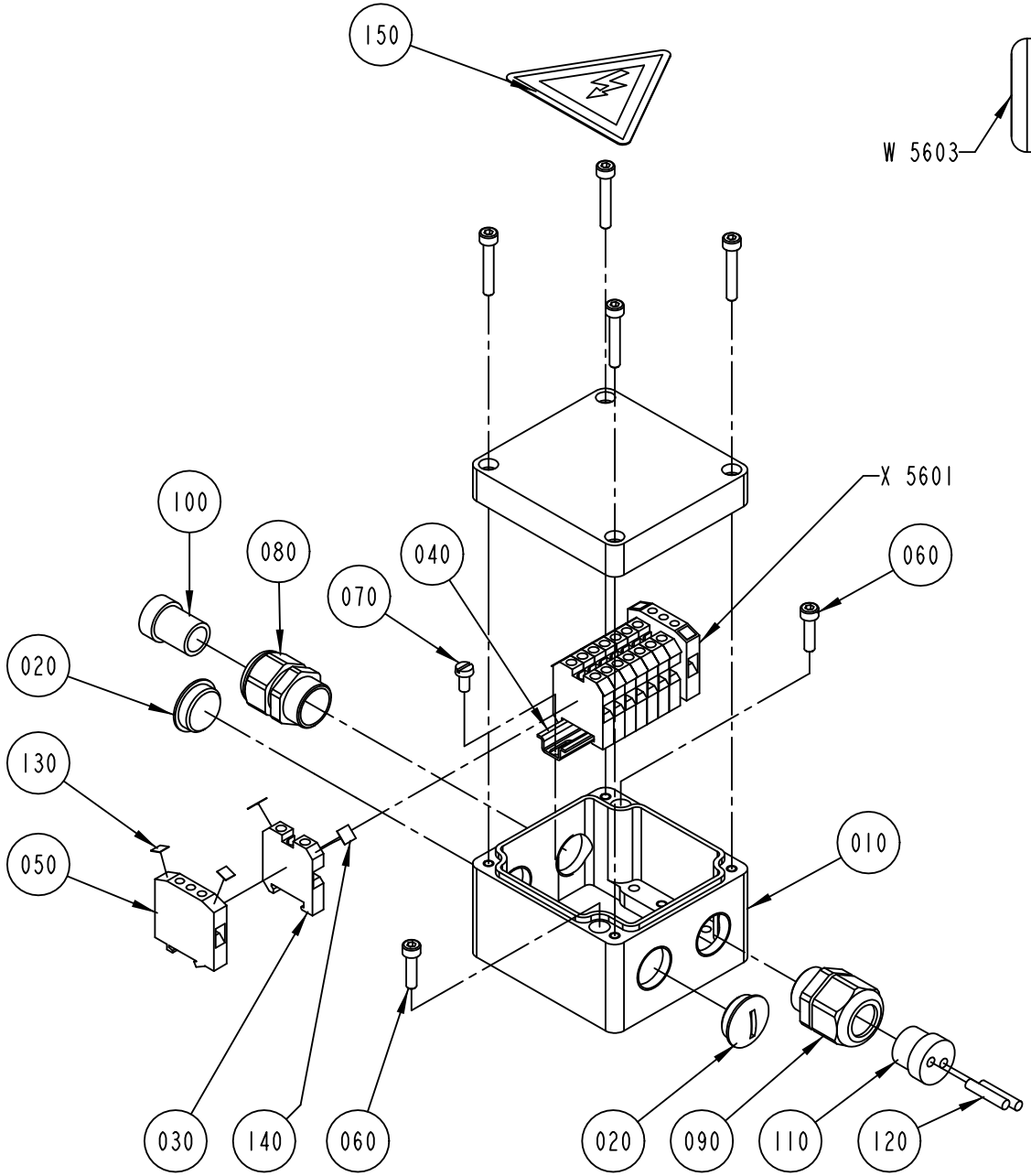

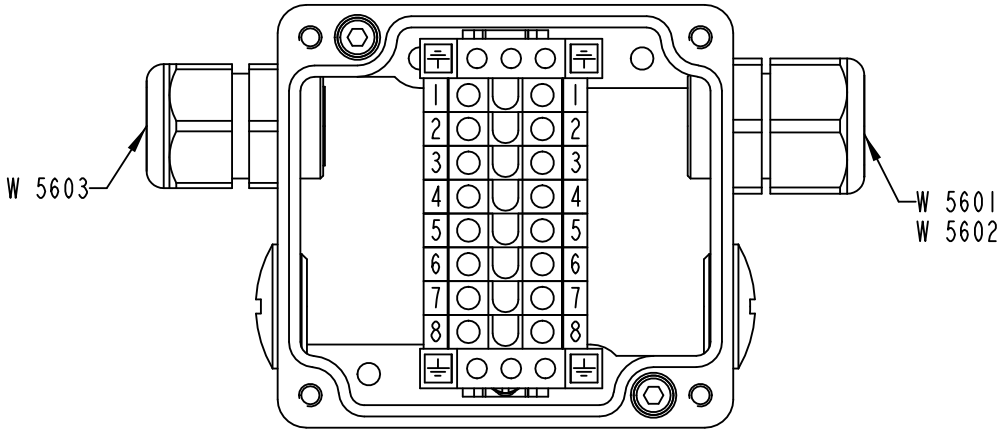

S-1484197-1
ECN 72704

ECM: 189524 - 20041104
Group number: 1484197-0100
Assembly Drawing: 1484197-1_1_AA

Pos	Part No	UN	Qty	Description	Page No
-					
010	1349568-0000		1	CONNECTION BOX	
020	90002-0009		2	BLANK-OFF PLUG, PR 18.6 SKINDICHT-BLK11	
030	90077-0079		8	FEED THROUGH TERMINAL, 02943.6	
040	90077-0328	MM	65	RAIL TS15/5	
050	90135-0026		2	EARTH TERMINAL, 3802.6	
060	312115-0293		2	SCREW ISO4762 M4X16 A4 80	
070	312125-0287		2	SCREW ISO 1207 M4X8 A4	
080	353240-0002		1	GLAND W/O INSERT PG11 NORMAL	
090	353241-0002		1	GLAND W/O INSERT PG11 EXTENDED	
100	353249-0003		1	INSERT, SINGLE HOLE, E151/11	
110	353249-0036		1	INSERT, MULTI HOLE, EK152 M 2X4	
120	353249-0301		2	SEALING PIN, 4X20	
130	359011-0819		4	MARKING PLATES 5-GW (EARTH)	
140	359011-0821		2	SET OF SIGNS 6-FW 1-50	
150	359705-0015		1	WARNING SIGN ISO, RISK OF ELECTRIC SHOCK	

Pos	Part No	UN	Qty	Description	Page No

Tetra Pak

SPC
Spare Parts Catalogue

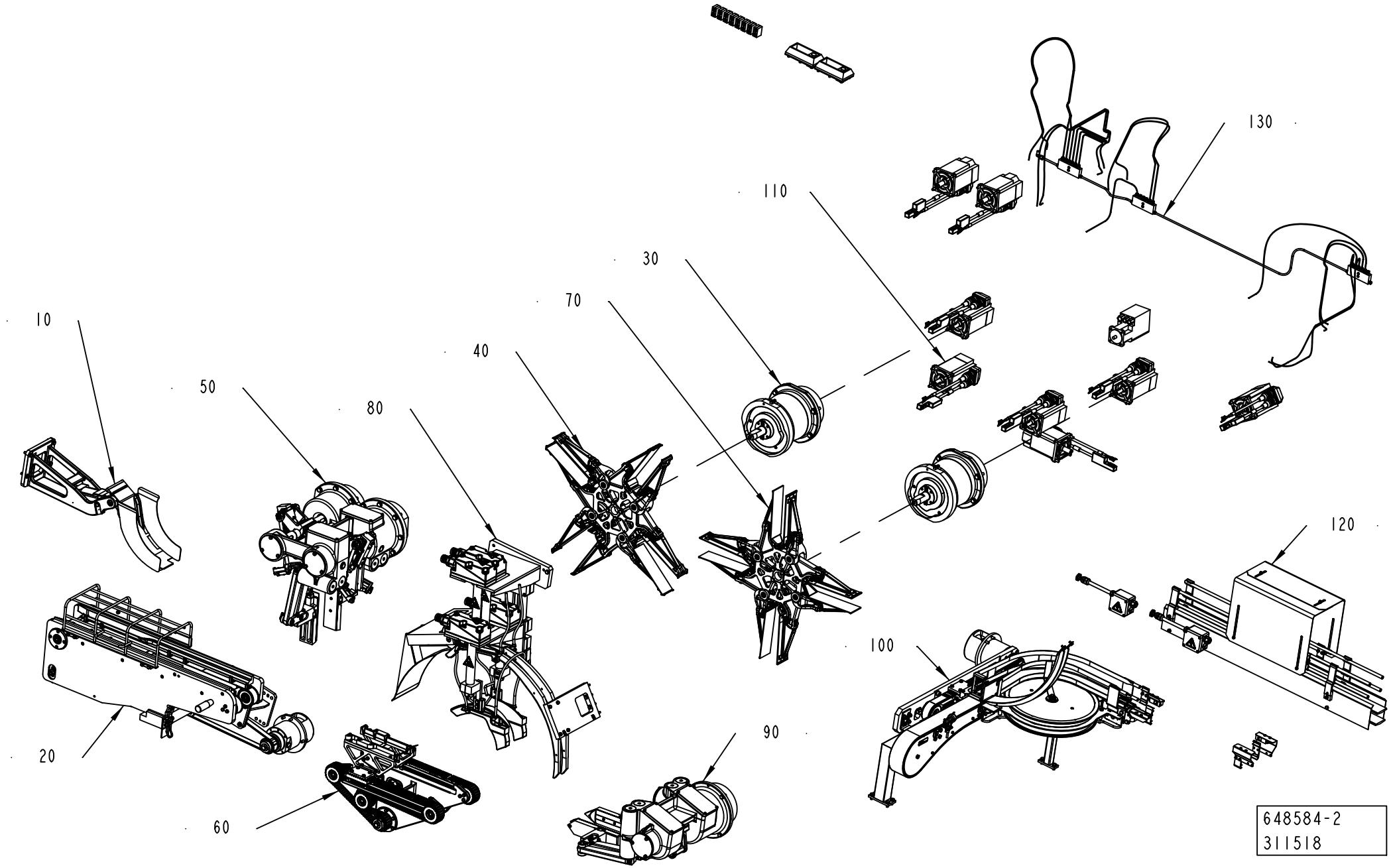
10
20
30
40
50
60
70
80
90
100
110
120
130
648584-2
311518

ECM: 319890 - 20080101
Group number: 648584-0200
Assembly Drawing: 648584-2_1_AA

Pos	Part No	UN	Qty	Description	Page No
-					
010	2541714-0200		1	DROP CHUTE CRADLE	**6-5, 6-7, 6-9**
020	2843970-0200		1	INFEED	**6-11**
030	2746750-0100		1	DRIVE	**6-15**
040	2746756-0100		1	WHEEL	**6-19**
050	2789210-0200		1	TOP FOLDER	**6-25, 6-27**
060	2761946-0100		1	TRANSFER	**6-33**
070	2746765-0100		1	WHEEL	**6-35**
080	2777401-0200		1	FLAP HEATER	**6-43, 6-45**
090	2789220-0200		1	PRESSURE DEVICE	**6-51, 6-53**
100	2774933-0100		1	OUT FEED	**6-59**
110	2826700-0200		1	MOTOR	**6-77**
120	2579995-0100		1	LAST POINT DE	**5-329, 6-79**
130	2878110-0100		1	LUBRICATING SYSTEM	**6-85**

Pos	Part No	UN	Qty	Description	Page No

DROP CHUTE CRADLE

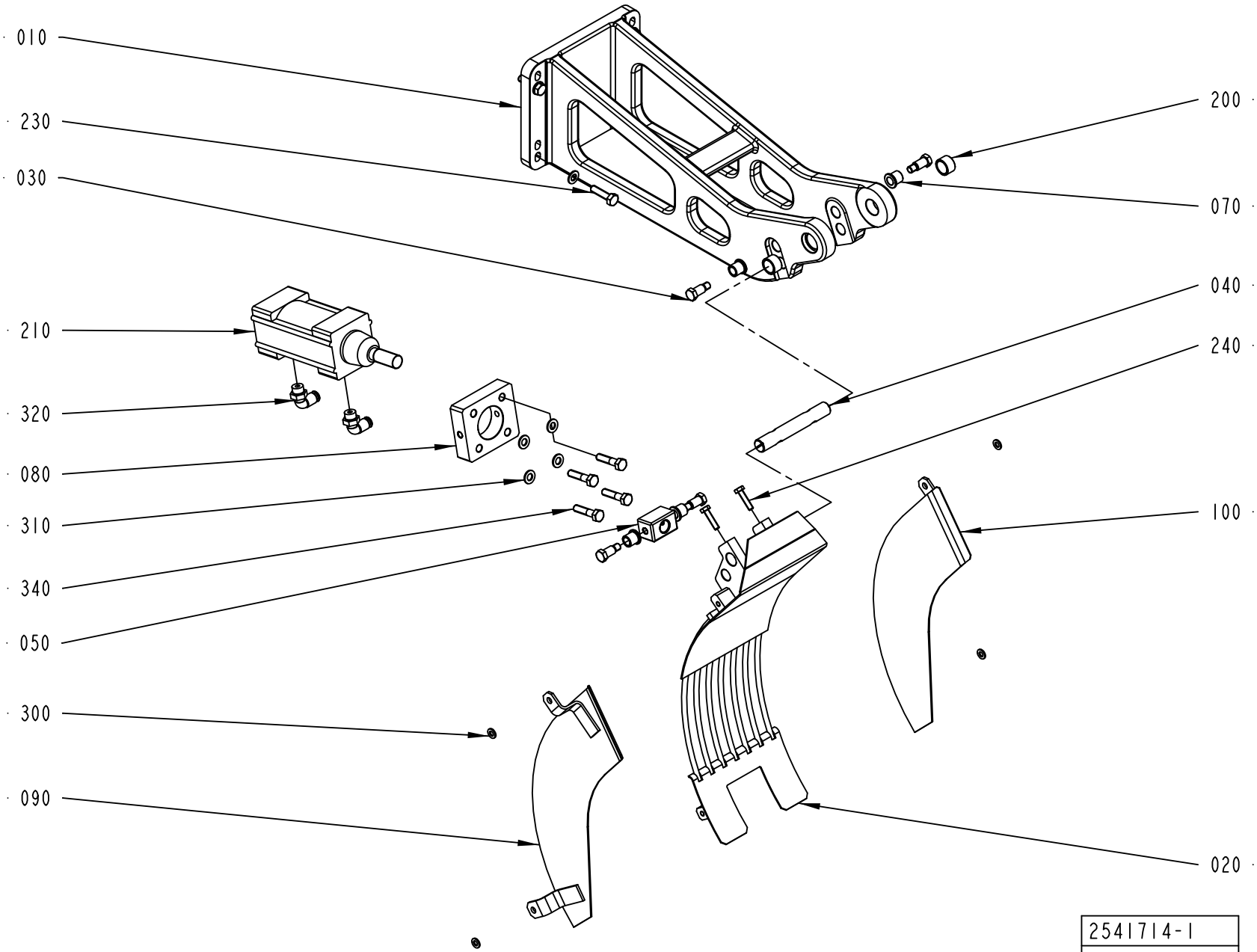

ECM: 369810 - 20090101
Group number: 2541714-0200
Assembly Drawing: 2541714-1_1_AA

This list covers pages from 6-4 to 6-9

Pos	Part No	UN	Qty	Description	Page No
TPA 1000SQ NOQC, TPA 1000SQ QC, TPA 0750SQ QC (See drawing on pages: 5-300, 6-4)					
010	2540823-0000		1	BRACKET	
020	1348920-0000		1	CRADLE	
090	1517472-0000		1	SIDE PLATE	
100	1517473-0000		1	SIDE PLATE	
300	315105-0165		4	WASHER BRB 8,4X16 RFR	
TBA 0200B QC, TBA 0330S QC, TBA 0250B QC (See drawing on pages: 5-300, 6-4)					
010	2540823-0000		1	BRACKET	
020	2751788-0000		1	CRADLE	
090	2650807-0000		1	SIDE PLATE	
100	2650808-0000		1	SIDE PLATE	
300	315105-0165		4	WASHER BRB 8,4X16 RFR	
TBA 0200M, TBA 0200S, TBA 0250S, TBA 0500S, TBA 1000SQ, TPA 0330SQ, TPA 0500SQ, TBA 0500B NOQC, TBA 1000B NOQC, TBA 1000S NOMOLDEDCAP, TBA 1000S STDA7, TBA 0200B NOQC, TBA 0330S NOQC, TBA 0250B NOQC, TPA 0200SQ QC, TPA 0250SQ NOQC (See drawing on pages: 5-300, 6-4)					
010	2540823-0000		1	BRACKET	
020	2751788-0000		1	CRADLE	
030	449190-0000		4	SHAFT	
070	1478928-0000		4	BUSHING	
090	1285023-0000		1	SIDE PLATE	
100	1285022-0000		1	SIDE PLATE	
300	315105-0165		4	WASHER BRB 8,4X16 RFR	
TBA 0200SQ, TBA 0250SQ (See drawing on pages: 5-302, 6-6)					
010	2540823-0000		1	BRACKET	
020	2751788-0000		1	CRADLE	
030	449190-0000		4	SHAFT	
070	1478928-0000		4	BUSHING	
090	1285023-0000		1	SIDE PLATE	
100	1285022-0000		1	SIDE PLATE	
TBA 0250B (See drawing on pages: 5-300, 6-4)					
010	2540823-0000		1	BRACKET	
TBA 0500B QC (See drawing on pages: 5-300, 6-4)					
010	2540823-0000		1	BRACKET	
020	2751788-0000		1	CRADLE	
090	2605993-0000		1	SIDE PLATE	
100	2605994-0000		1	SIDE PLATE	
TBA 1000B QC (See drawing on pages: 5-300, 6-4)					
010	2540823-0000		1	BRACKET	
020	2751788-0000		1	CRADLE	
090	1285023-0000		1	SIDE PLATE	
100	1285022-0000		1	SIDE PLATE	
TBA 1000S LIGHTCAP (See drawing on pages: 5-300, 6-4)					
010	2540823-0000		1	BRACKET	
020	2748115-0000		1	CRADLE	
030	449190-0000		4	SHAFT	
070	1478928-0000		4	BUSHING	
090	1285023-0000		1	SIDE PLATE	
100	1285022-0000		1	SIDE PLATE	
300	315105-0165		4	WASHER BRB 8,4X16 RFR	
TBA 1500S (See drawing on pages: 5-300, 6-4)					
010	2540823-0000		1	BRACKET	
020	1348920-0000		1	CRADLE	
090	1348854-0000		1	PLATE	
100	1349017-0000		1	PLATE	
300	315105-0165		4	WASHER BRB 8,4X16 RFR	
TBA 1890S QC, TBA 2000S QC (See drawing on pages: 5-300, 6-4)					
010	2540823-0000		1	BRACKET	
020	2665204-0000		1	CRADLE	
090	2665205-0000		1	PLATE	
100	2665206-0000		1	PLATE	
TGA 1000SQ, TGA 0750SQ, TGA 0500SQ (See drawing on page: 6-8)					
010	2807156-0000		1	BRACKET	
020	2866646-0000		1	CRADLE	
030	449190-0000		4	SHAFT	
060	2883280-0000		1	COVER	
070	1478928-0000		4	BUSHING	
360	90457-0922		1	ELBOW PIPE JOINT, EXT.THREAD, D=6MM M5	
TPA 0250SQ QC (See drawing on pages: 5-300, 6-4)					
010	2540823-0000		1	BRACKET	
020	2751788-0000		1	CRADLE	
090	1285023-0000		1	SIDE PLATE	
100	1285022-0000		1	SIDE PLATE	
300	315105-0165		4	WASHER BRB 8,4X16 RFR	
Common Parts					
040	1144579-0000		1	AXLE	
050	1144577-0000		1	BLOCK	
080	2594886-0000		1	PLATE	
150	2864758-0000		1	NOZZLE	
200	321116-0234		2	BEARING BUSH W/O FLANGE, 16X20X12 MM	
210	90450-0504		1	DOUBLE ACTING, PROFILE, CYL 50-25	
230	312105-0455		4	SCREW M6S ISO 4017 M8X30 A480	
240	312105-0372		2	SCREW M6S ISO 4017 M6X25 A480	
250	312115-0325		2	SCREW ISO4762 M5X10 A4 80	
310	315105-0165		8	WASHER BRB 8,4X16 RFR	

Machine Type | Group Description | Used-In | Group Number | Page No

DROP CHUTE CRADLE

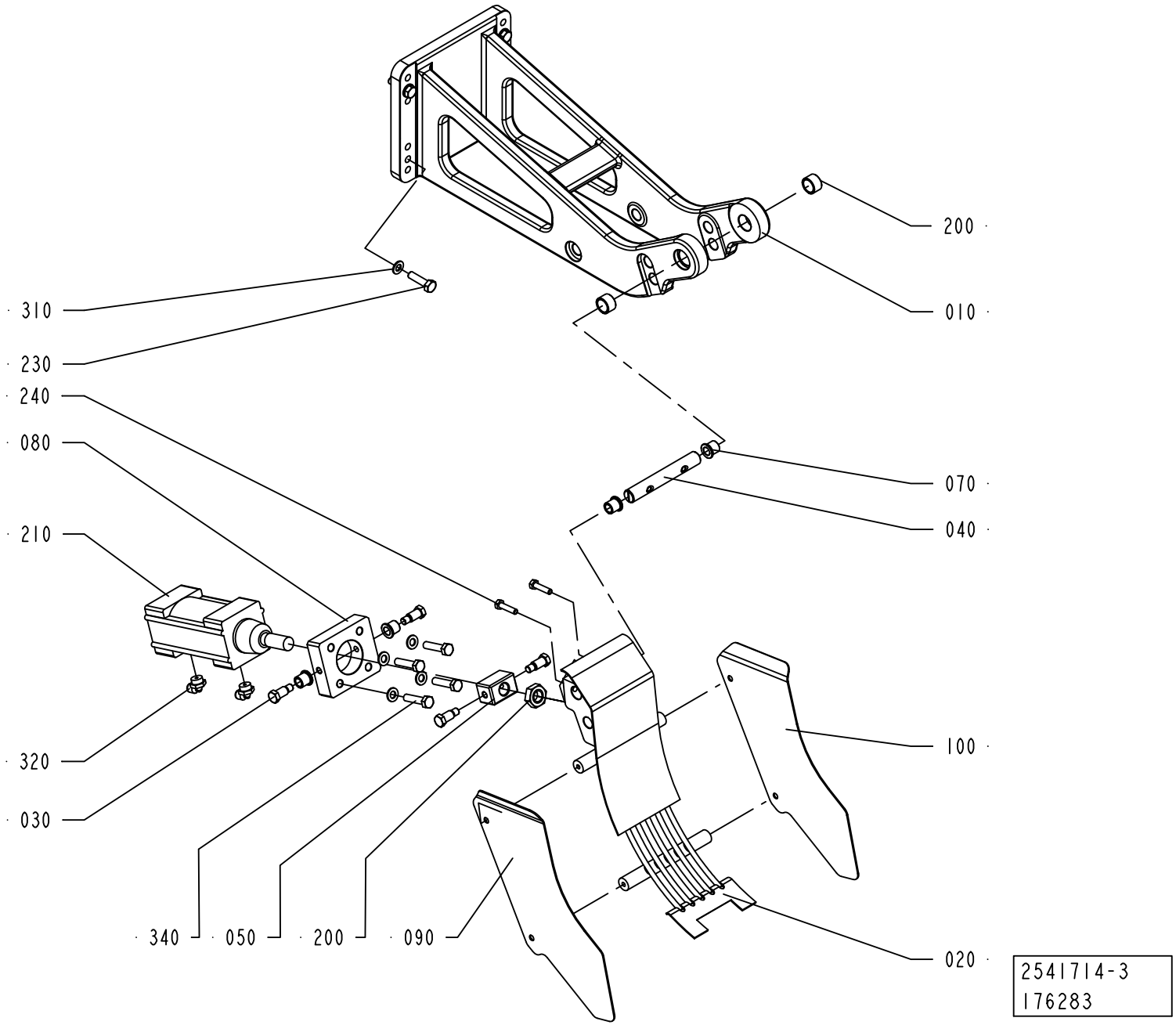

ECM: 369810 - 20090101
Group number: 2541714-0200
Assembly Drawing: 2541714-3_1_AA

This list covers pages from 6-4 to 6-9

Pos	Part No	UN	Qty	Description	Page No
Common Parts (Cont'd)					
320	90458-2957		2	ELBOW PIPE JOINT, EXT.THREAD, D=6MM-G1/4	
340	312105-0457		4	SCREW M6S ISO 4014 M8X35 A480	

Pos	Part No	UN	Qty	Description	Page No

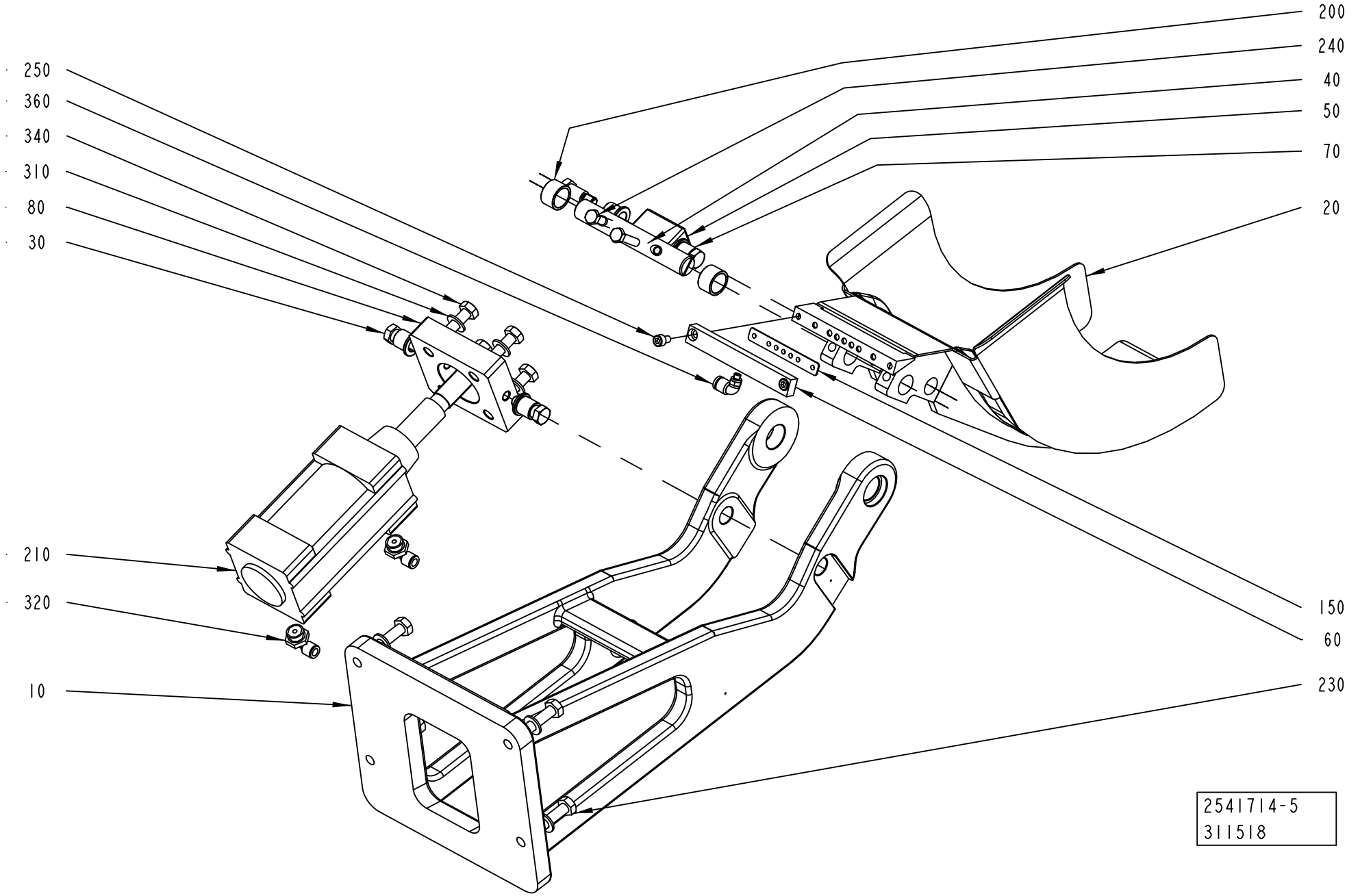
200
240
40
50
70
20
250
360
340
310
80
30
210
320
10
150
60
230
2541714-5
311518

Pos	Part No	UN	Qty	Description	Page No

SEE PREVIOUS LISTS PAGES: 6-5, 6-7.

Pos	Part No	UN	Qty	Description	Page No

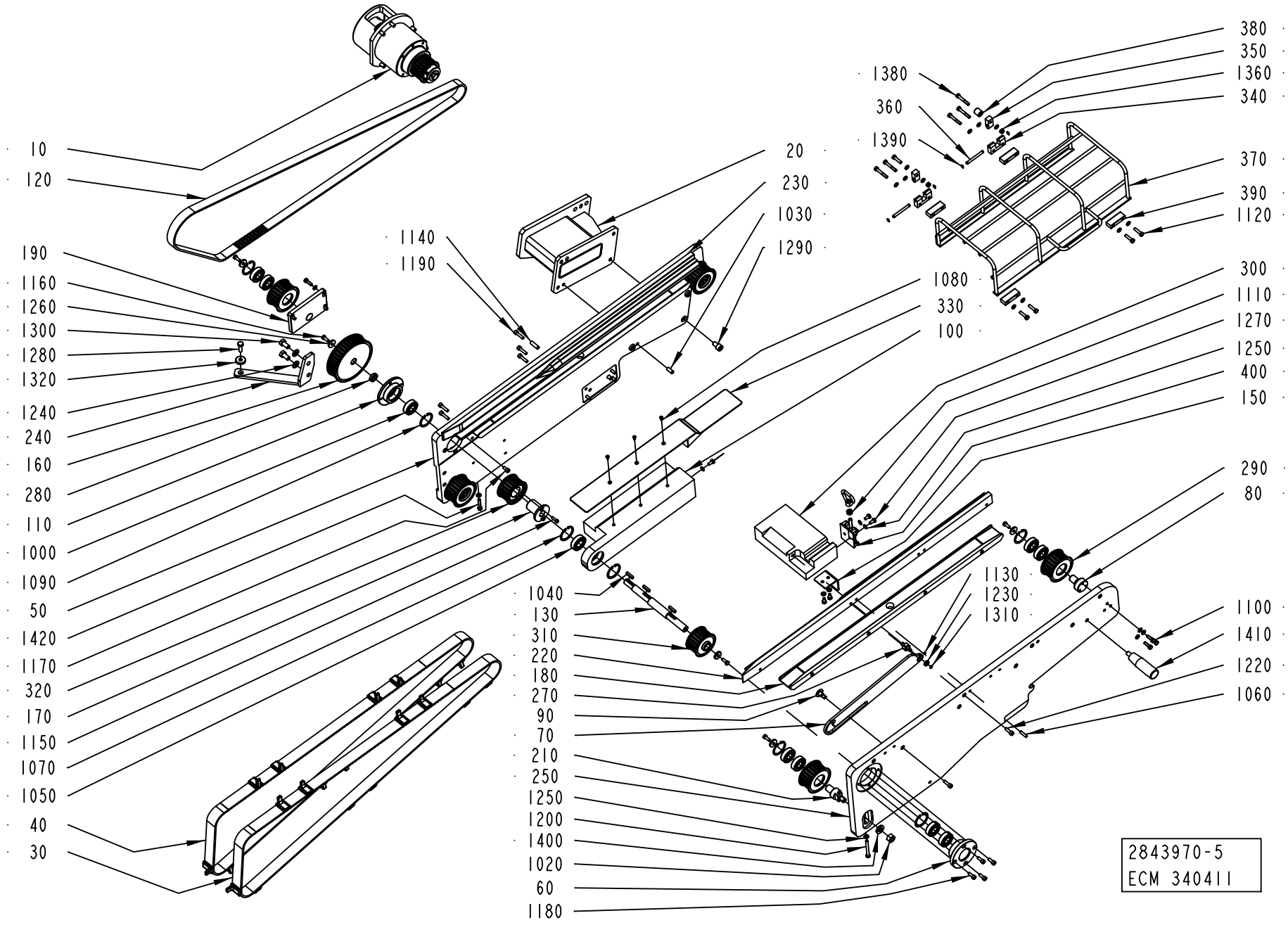
10
120
190
1160
1260
1300
1280
1320
1240
240
160
280
110
1000
1090
50
1420
1170
320
170
1150
1070
1050
40
30
1140
1190
20
230
1030
1290
1080
330
100
1040
130
310
220
180
270
90
70
210
250
1250
1200
1400
1020
60
1180
1380
360
1390
380
350
1360
340
370
390
1120
300
1110
1270
1250
400
150
290
80
1130
1230
1310
1100
1410
1220
1060
2843970-5
ECM 340411

ECM: 389570 - 20090505
Group number: 2843970-0200
Assembly Drawing: 2843970-5_1_AB

Pos	Part No	UN	Qty	Description	Page No
-					
010	2762008-0100		1	DRIVE	**6-13**
020	2852191-0000		1	SUPPORT	
030	2926852-0000		1	BELT	
040	2926853-0000		1	BELT	
050	2902483-0000		1	PLATE	
060	2866671-0000		1	FLANGE	
070	2902447-0000		1	SLIDER	
080	2902446-0000		2	SHAFT	
090	2878029-0000		1	SPACER	
100	2866672-0000		1	SUPPORT	
1000	90214-0189		13	BALL BEARING, 17X40X12 MM	
1020	312605-0322		2	HEXAGON NUT, M6M M12 A280	
1030	311103-0401		2	PARALLEL PIN ISO 2338 8M6X20 A1	
1040	315705-0202		3	PARALLEL KEY W ROUND ENDS 5X5X25MM	
1050	90214-0225		1	BALL BEARING SOLID OIL 20X42X12 MM	
1060	311103-1355		4	PARALLEL PIN ISO 2338 6M6X24 A1	
1070	90141-0020		2	RETAINING RING FOR BORE DIN 472 42 A2	
1080	312155-0289		3	SCREW DIN 7991 MF6S M4X10 A4 70	
1090	315753-0127		7	RETAINING RING FOR BORE DIN 472 40 A2	
110	2843976-0000		1	FLANGE	
1100	312105-0370		9	SCREW M6S ISO 4017 M6X20 A480	
1110	312605-0318		1	HEXAGON NUT, M6M M8 A280	
1120	312105-0372		5	SCREW M6S ISO 4017 M6X25 A480	
1130	312318-0283		1	SCREW ISO4029 M4X4 A4	
1140	311103-0404		4	PARALLEL PIN ISO 2338 8M6X28 A1	
1150	312115-0329		2	SCREW ISO4762 M5X16 A4 80	
1160	312105-0368		7	SCREW M6S ISO 4017 M6X16 A480	
1170	312115-0366		4	SCREW ISO4762 M6X12 A4 80	
1180	312115-0368		4	SCREW ISO4762 M6X16 A4 80	
1190	312115-0370		8	SCREW ISO4762 M6X20 A4 80	
120	2926854-0000		1	TIMING BELT	
1200	312105-0382		2	SCREW M6S ISO 4014 M6X60 A480	
1220	312115-0370		16	SCREW ISO4762 M6X20 A4 80	
1230	90600-3582		1	SPHERICAL BEARING, GE 6 TGR	
1240	315106-0173		2	WASHER ISO 7089-10-200 HV A4	
1250	315105-0153		29	WASHER BRB 6,4X12 RFR	
1260	315125-0153		7	WASHER TBRSB 6,4X22X4 A4	
1270	312105-0366		5	SCREW M6S ISO 4017 M6X12 A480	
1280	312105-0493		1	SCREW M6S ISO 4017 M10X25 A480	
1290	312115-0489		4	SCREW ISO4762 M10X16 A4 80	
130	2866685-0000		1	SHAFT	
1300	312105-0491		2	SCREW M6S ISO 4017 M10X20 A480	
1310	315751-0103		1	RETAINING RING FOR SHAFT DIN 471 6 SS	
1320	315125-0173		1	WASHER TBRSB 10,5X28X6 A4	
1360	312812-0316		2	HEXAGON NUT, NY-LOCK M6 A480	
1380	312105-0378		5	SCREW M6S ISO 4014 M6X40 A480	
1390	315755-0106		4	RETAINING RING SHAFT DIN 6799 4 A2	
1400	315115-0178		2	WASHER PLAIN, TBRB 13/24 H=4	
1410	90051-0127		1	HANDLE, NO. .601/90+X-M10-INOX	
1420	312109-0376		2	SCREW M6S ISO 4017 M6X35 A480	
150	2866695-0000		1	PLATE	
160	2926843-0000		1	TOOTHED PULLEY	
170	2866686-0000		1	FLANGE	
180	2866684-0000		2	GUIDE	
190	2902485-0000		1	SUPPORT	
210	2866666-0000		2	COLUMN	
220	2866670-0000		1	GUIDE	
230	2866669-0000		1	GUIDE	
240	2866693-0000		1	SUPPORT	
250	2902484-0000		1	PLATE	
270	2902448-0000		1	PIN	
280	2843973-0000		1	SPACER	
290	2926844-0000		5	TOOTHED PULLEY	
300	2866683-0000		1	SUPPORT	
310	2926839-0000		1	TOOTHED PULLEY	
320	2926840-0000		1	TOOTHED PULLEY	
330	2866691-0000		1	PLATE	
340	1144667-0000		2	HINGE	
350	1144668-0000		2	HINGE	
360	1144669-0000		2	PIN	
370	1260894-0000		1	PROTECTION	
380	1360149-0000		1	SPACER	
390	2882179-0000		4	SPACER	
400	2955762-0000		1	LOCK HANDLE	

Machine Type | Group Description | Used-In | Group Number | Page No

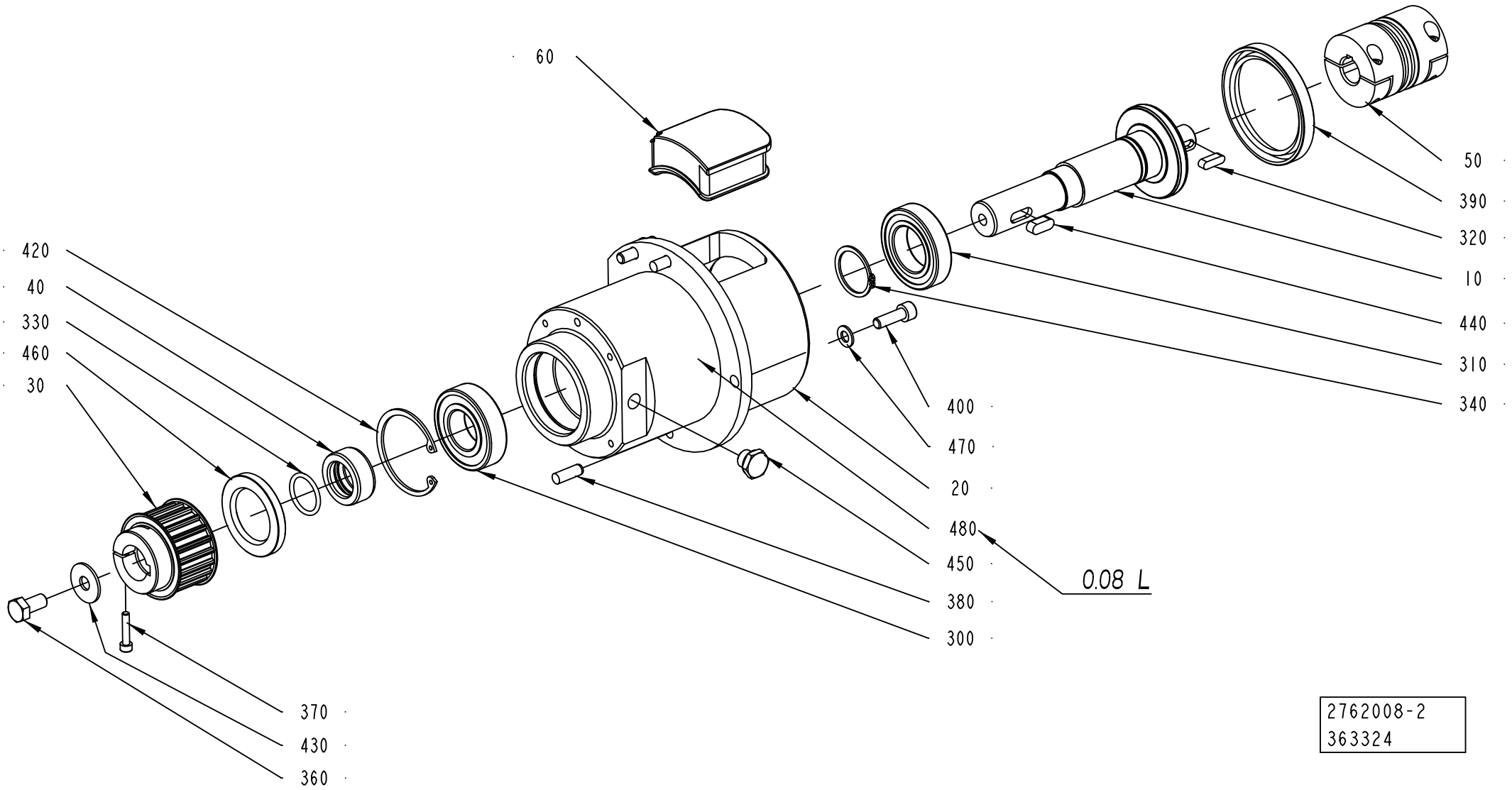
60
420
40
330
460
30
50
390
320
10
440
310
340
400
470
20
480
450
380
300
0.08 L
370
430
360
2762008-2
363324

ECM: 374474 - 20090102
Group number: 2762008-0100
Assembly Drawing: 2762008-2_1_AC

Pos	Part No	UN	Qty	Description	Page No
TBA, TPA					
030	2761956-0000		1	DRIVE PULLEY	
TGA					
030	2926826-0000		1	DRIVE PULLEY	
Common Parts					
010	2789197-0000		1	SHAFT	
020	2789196-0000		1	FLANGE	
040	2761957-0000		1	SPACER	
050	90600-5704		1	BELLOW COUPLING, 19X19 MM	
060	2945996-0000		1	PLUG	
300	90458-2362		1	BALL BEARING, 30X62X16 MM	
310	321308-0207		1	BALL BEARING, 35X62X14 MM	
320	315705-0232		1	PARALLEL KEY W. ROUND ENDS 6X6X20 MM	
330	315202-0218		1	O-RING 26,2X3 MM	
340	315751-0124		1	RETAINING RING FOR SHAFT DIN 471 35 SS	
360	312105-0491		1	SCREW M6S ISO 4017 M10X20 A480	
370	312115-0333		1	SCREW ISO4762 M5X25 A4 80	
380	311103-1403		2	PARALLEL PIN ISO 2338 8M6X24 A1	
390	315221-0221		1	RADIAL SEAL 70X90X10 MM	
400	312115-0453		3	SCREW ISO4762 M8X25 A4 80	
420	90458-0048		1	RETAINING RING FOR HOLE, 62X2 MM	
430	90005-0140		1	WASHER PLAIN ROUND 10,5(M10)/30, H=2	
440	315705-0263		1	PARALLEL KEY W. ROUND ENDS 8X7X20 MM	
450	90330-0026		1	PLUG, EXT. G-THREAD, G1/4	
460	315221-0185		1	RADIAL SEAL 40X62X7 MM	
470	315105-0165		3	WASHER BRB 8,4X16 RFR	
480	90296-0072	L	1	SHELL OMALA OIL 150, CAN 20 LITRES	

Pos	Part No	UN	Qty	Description	Page No

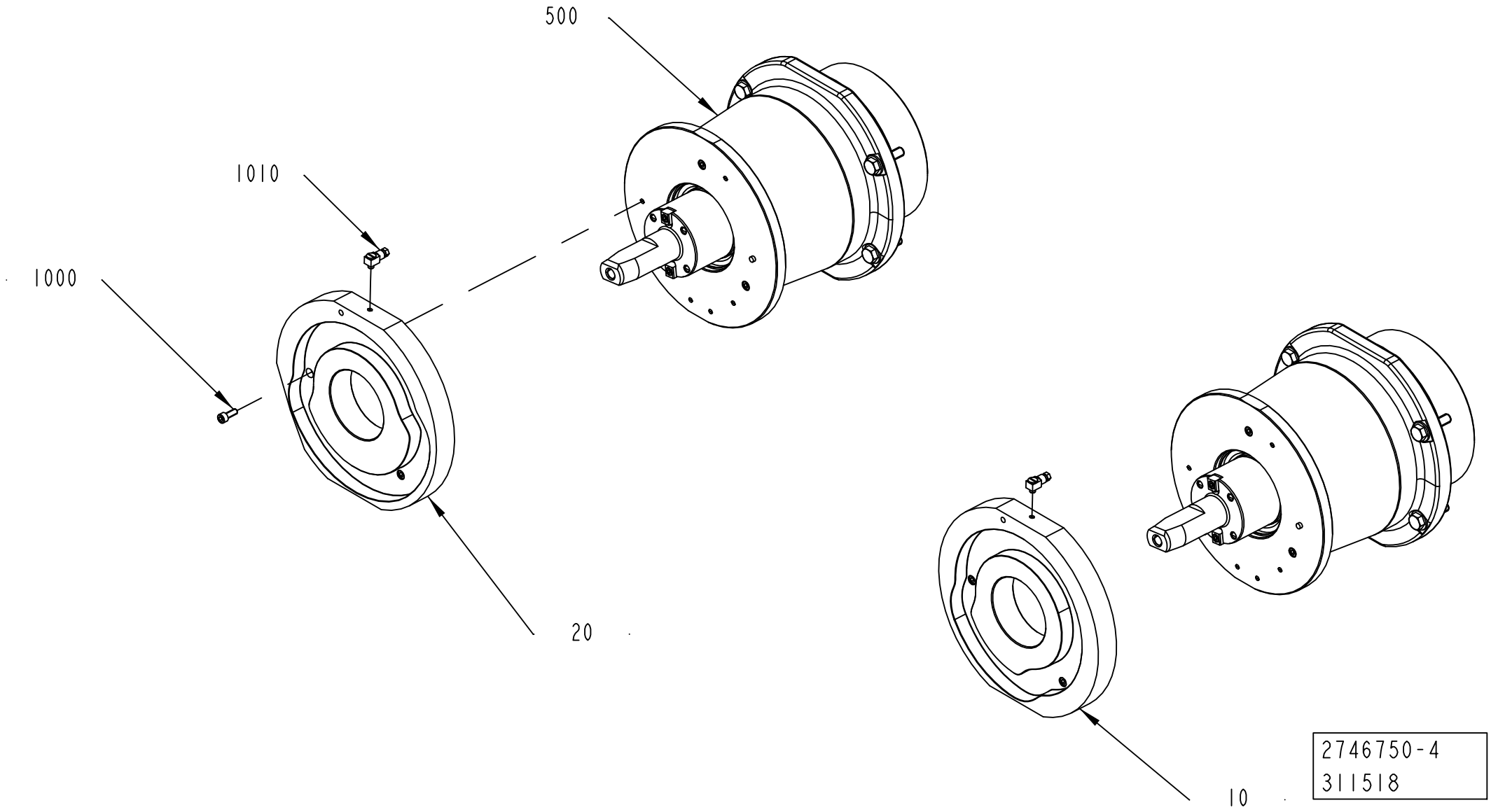
500
1010
1000
20
10
2746750-4
311518

ECM: 318900 - 20080101
Group number: 2746750-0100
Assembly Drawing: 2746750-4_1_AA

Pos	Part No	UN	Qty	Description	Page No
-					
010	2746755-0000		1	CAM	
020	2746754-0000		1	CAM	
1000	312115-0368		6	SCREW ISO4762 M6X16 A4 80	
1010	90134-0058		2	CONNECTION	
500	2746751-0100		2	DRIVE	**6-17**

Pos	Part No	UN	Qty	Description	Page No

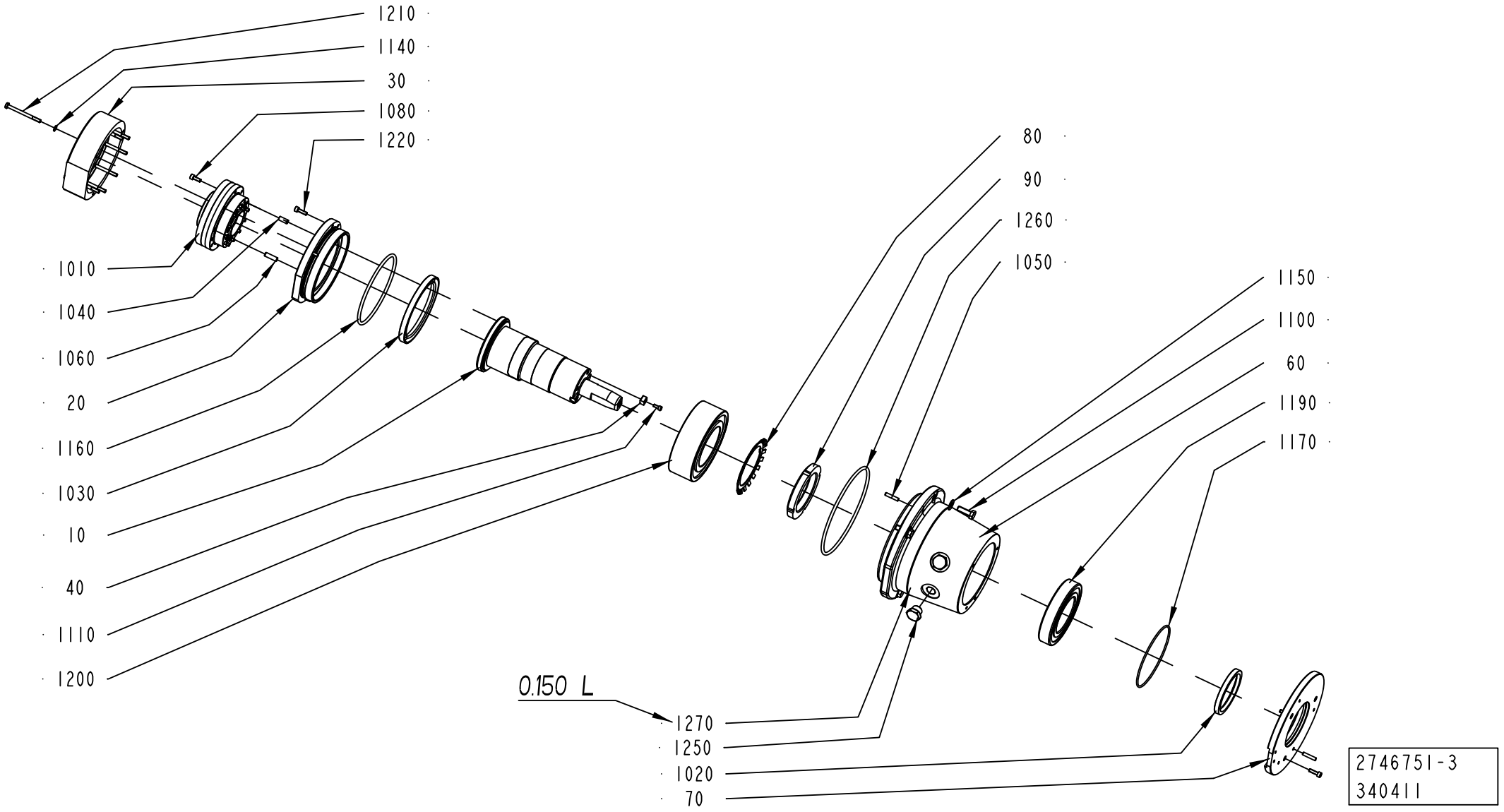
1210
1140
30
1080
1220
1010
1040
1060
20
1160
1030
10
40
1110
1200
80
90
1260
1050
1150
1100
60
1190
1170
0.150 L
1270
1250
1020
70
2746751-3
340411

ECM: 383369 - 20090115
Group number: 2746751-0100
Assembly Drawing: 2746751-3_1_AC

Pos	Part No	UN	Qty	Description	Page No
-					
010	2789218-0000		1	SHAFT	
020	2789232-0000		1	FLANGE	
030	2805185-0000		1	FLANGE	
040	2685732-0000		2	KEY	
060	2789217-0000		1	HUB	
070	2746752-0000		1	CAP	
080	2838219-0000		1	LOCK WASHER	
090	2838220-0000		1	ROUND NUT	
1010	90600-0415		1	GEARS, PLANETARY FC-A25G-29	
1020	90091-0055		1	RADIAL SEAL 80X100X10 MM	
1030	90091-0058		1	RADIAL SEAL 120X150X12 MM	
1040	311103-0401		2	PARALLEL PIN ISO 2338 8M6X20 A1	
1050	311103-0357		2	PARALLEL PIN ISO 2338 6M6X30 A1	
1060	311103-0404		2	PARALLEL PIN ISO 2338 8M6X28 A1	
1080	312115-0368		11	SCREW ISO4762 M6X16 A4 80	
1100	312105-0495		4	SCREW M6S ISO 4017 M10X30 A480	
1110	312115-0327		2	SCREW ISO4762 M5X12 A4 80	
1140	315105-0153		7	WASHER BRB 6,4X12 RFR	
1150	315105-0173		4	WASHER BRB 10,5X22 RFR	
1160	315202-0321		1	O-RING 149,3X5,7 MM	
1170	315204-0318		1	O-RING 134,5X3 MM	
1190	321309-0116		1	BALL BEARING, 80X140X26 MM	
1200	321330-0118		1	ANG. BALL BEAR, 90X160X52,4 MM	
1210	90287-0312		7	SCREW M6S ISO 4014 M6X75 A480	
1220	312115-0370		7	SCREW ISO4762 M6X20 A4 80	
1250	90330-0037		2	PLUG, EXT. G-THREAD, G1/2	
1260	315202-0329		1	O-RING 189,3X5,7 MM	
1270	90296-0072	L	1	SHELL OMALA OIL 150, CAN 20 LITRES	

Pos	Part No	UN	Qty	Description	Page No

Machine Type | Group Description | Used-In | Group Number | Page No

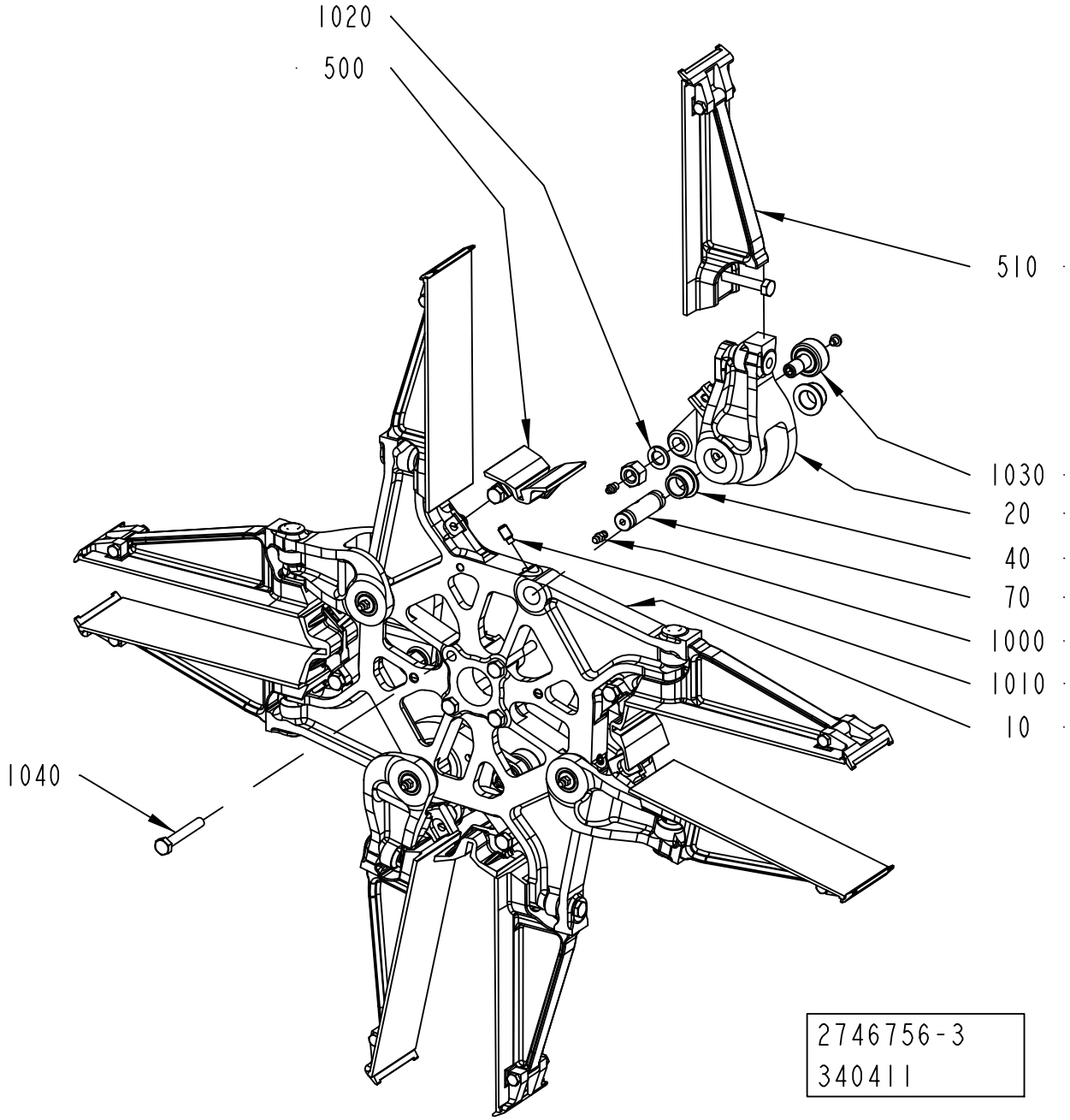
1020
500
510
1030
20
40
70
1000
1010
10
1040
2746756-3
340411

ECM: 383368 - 20090115
Group number: 2746756-0100
Assembly Drawing: 2746756-3_1_AB

Pos	Part No	UN	Qty	Description	Page No
-					
010	2798294-0000		1	WHEEL	
	2798290-0000		*1*	*WHEEL*	
020	2798295-0000		4	ARM	
	2798291-0000		*1*	*ARM*	
040	2805193-0000		8	BUSHING	
070	2878100-0000		4	SHAFT	
1000	90286-0013		4	GREASE NIPPLE STRAIGHT, H1 M6X1 2346	
1010	90287-0166		4	SCREW, SOCK.SET DOGPOINT M8X16	
1020	315402-0178		4	LOCK WASHER FBB 12,2	
1030	90600-0808		4	CAM ROLLER 12X30X40 MM, CFT 12 M UU N	
1040	312105-0460		4	SCREW M6S ISO 4014 M8X45 A480	
500	2902419-0100		4	BOTTOM	**6-21**
510	2902418-0100		8	FLAP	**6-23**

Pos	Part No	UN	Qty	Description	Page No

Machine Type | Group Description | Used-In | Group Number | Page No

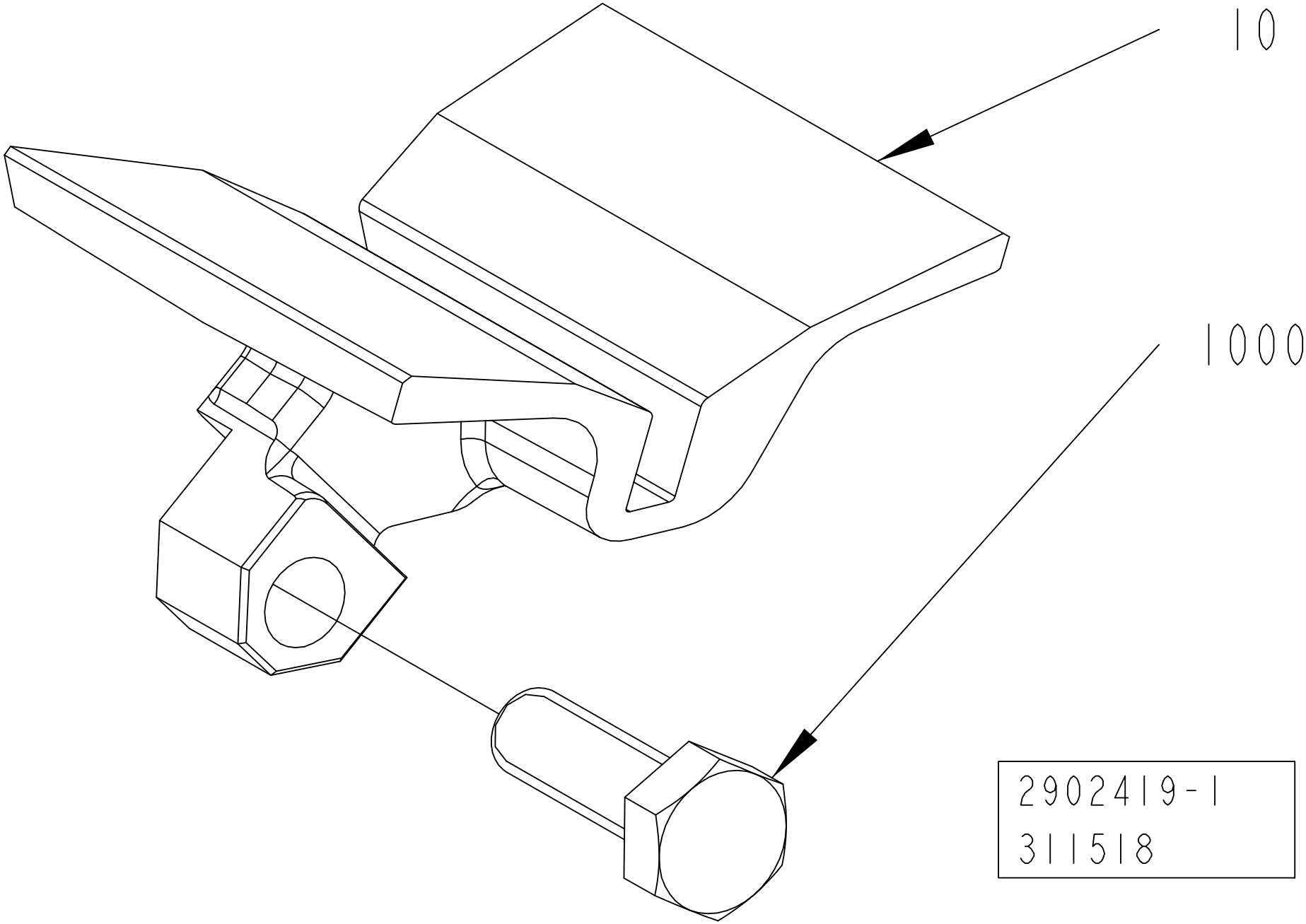
10
1000
2902419-1
311518

ECM: 318637 - 20080101
Group number: 2902419-0100
Assembly Drawing: 2902419-1_1_AA

Pos	Part No	UN	Qty	Description	Page No
TGA 0500SQ					
010	2866701-0000		1	BOTTOM	
TGA 0750SQ					
010	2866700-0000		1	BOTTOM	
TGA 1000SQ					
010	2798304-0000		1	BOTTOM	
Common Parts					
1000	312105-0453		1	SCREW M6S ISO 4017 M8X25 A480	

Pos	Part No	UN	Qty	Description	Page No

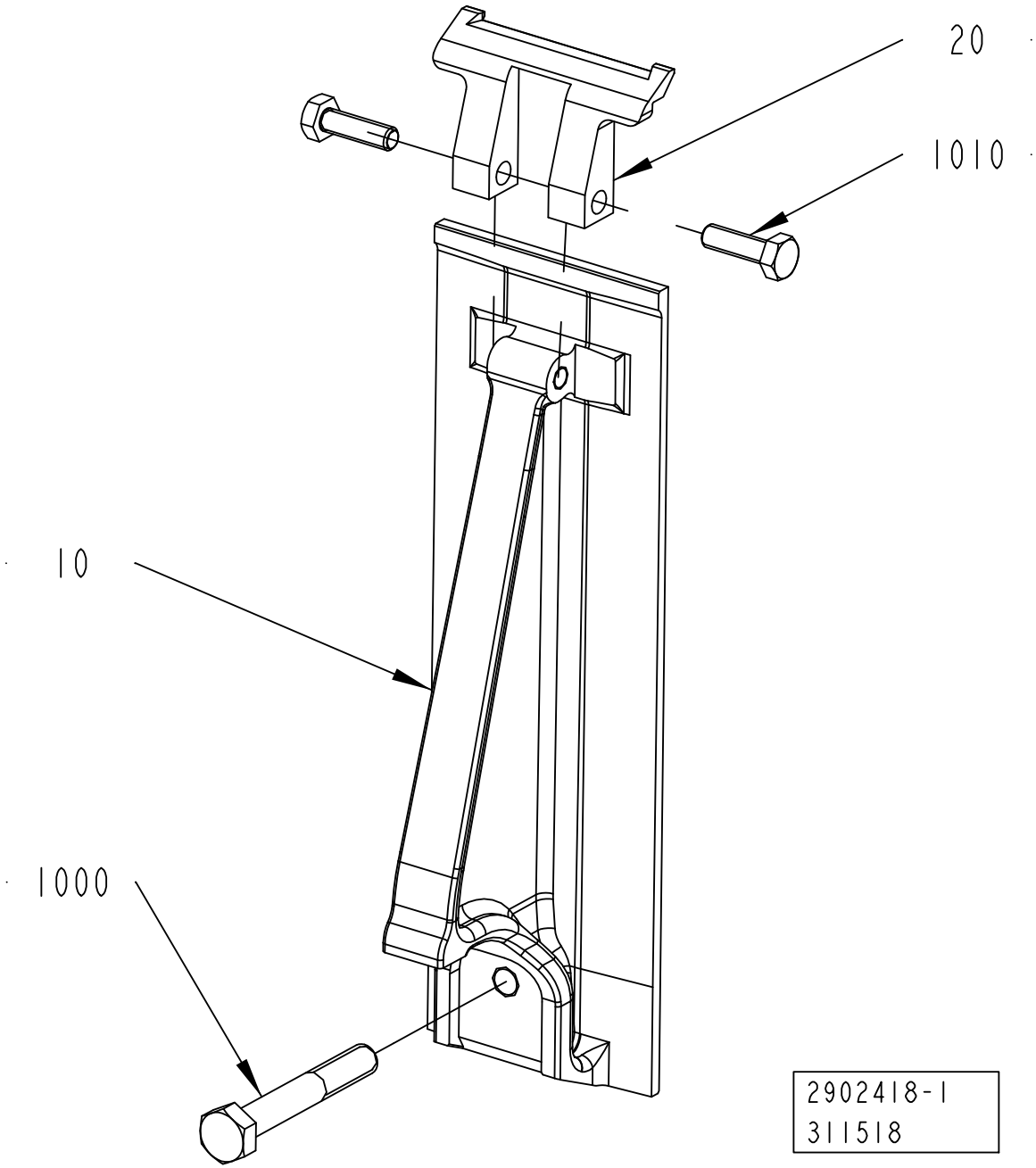
20
1010
10
1000
2902418-1
311518

ECM: 369828 - 20090101
Group number: 2902418-0100
Assembly Drawing: 2902418-1_1_AA

Pos	Part No	UN	Qty	Description	Page No
-					
010	2798296-0000		1	FLAP	
	2798292-0000		*1*	*FLAP*	
020	2764324-0000		1	HOLD-DOWN	
1000	312105-0462		1	SCREW M6S ISO 4014 M8X55 A480	
1010	312105-0368		2	SCREW M6S ISO 4017 M6X16 A480	

Pos	Part No	UN	Qty	Description	Page No

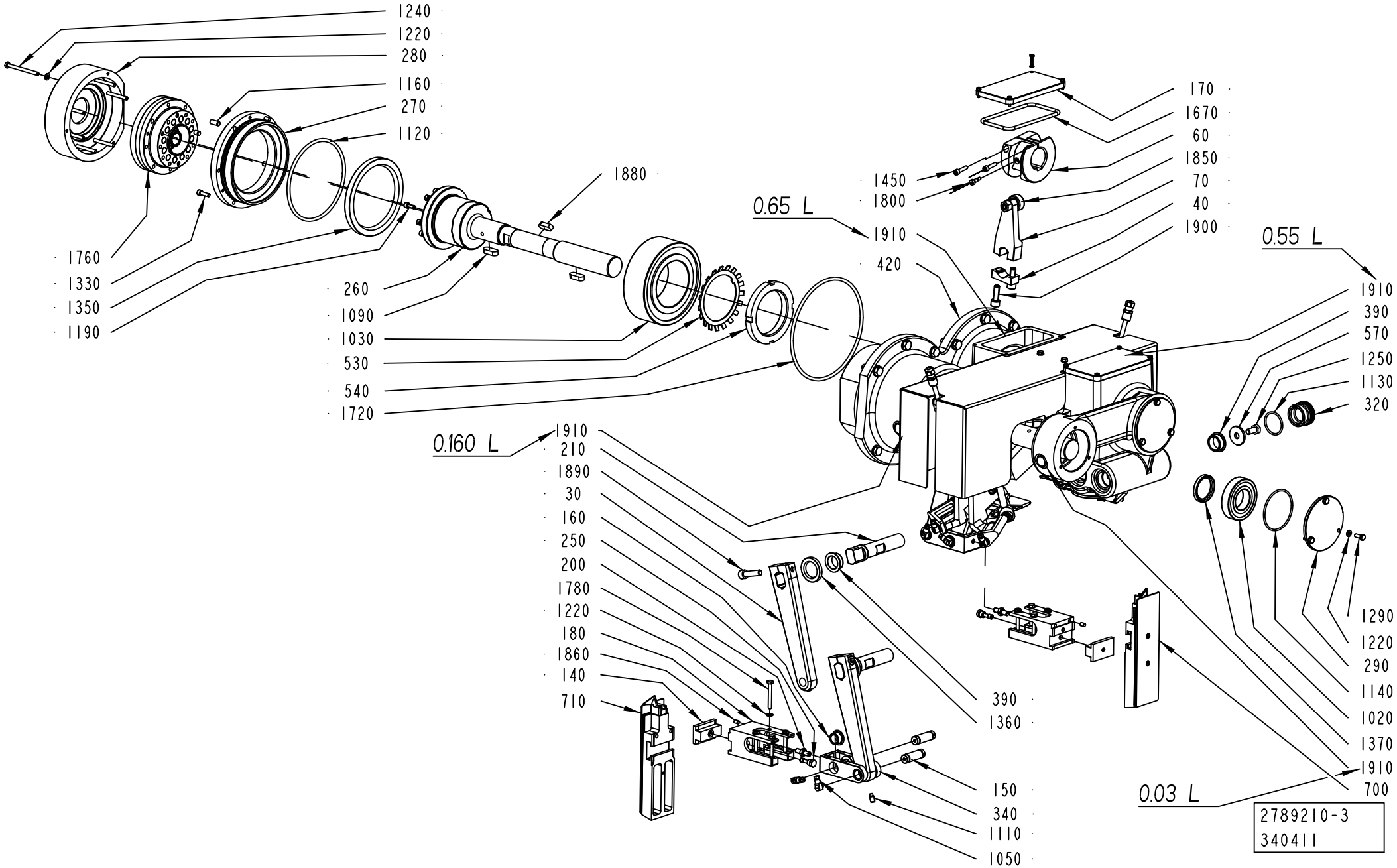
1240
1220
280
1160
270
1120
1880
1760
1330
1350
1190
260
1090
1030
530
540
1720
1450
1800
0.65 L
1910
420
170
1670
60
1850
70
40
1900
0.55 L
1910
390
570
1250
1130
320
0.160 L
1910
210
1890
30
160
250
200
1780
1220
180
1860
140
710
390
1360
150
340
1110
1050
1290
1220
290
1140
1020
1370
1910
700
0.03 L
2789210-3
340411

ECM: 397499 - 20090505
Group number: 2789210-0200
Assembly Drawing: 2789210-3_1_AB

This list covers pages from 6-24 to 6-27

Pos	Part No	UN	Qty	Description	Page No
-					
010	2878095-0000		1	PIN	
020	2805164-0000		4	SHAFT	
030	2902463-0000		4	LEVER	
040	2878117-0000		2	CLAMP	
050	2805186-0000		2	CLAMP	
060	2805174-0000		2	CAM	
070	2878116-0000		2	LEVER	
080	2805188-0000		2	LEVER	
090	2878096-0000		1	LEVER	
100	2878097-0000		1	LEVER	
1000	90600-0847		8	SPHERICAL BEARING, S8-DNIRO BMF C1	
1010	90214-0189		4	BALL BEARING, 17X40X12 MM	
1020	321313-0108		2	BALL BEARING, 40X80X18 MM	
1030	321330-0118		2	ANG. BALL BEAR, 90X160X52,4 MM	
1040	321101-0172		8	FLANGE BUSHING, 12X18X10 MM	
1050	90134-0058		10	CONNECTION	
1060	90141-0017		2	RETAINING RING FOR SHAFT DIN 471 17 SS	
1070	312605-0318		2	HEXAGON NUT, M6M M8 A280	
1080	90165-0060		1	PIPE CLIP FOR TUBE D=5 MM	
1090	315701-0330		2	PARALLEL KEY W. ROUND ENDS 12X8X32 MM	
110	2826677-0000		2	MAIN BODY	
1100	312115-0287		5	SCREW ISO4762 M4X8 A4 80	
1110	90287-0166		4	SCREW, SOCK.SET DOGPOINT M8X16	
1120	315202-0321		2	O-RING 149,3X5,7 MM	
1130	315202-0223		4	O-RING 39,2X3 MM	
1140	315202-0306		2	O-RING 74,5X3 MM	
1150	312115-0455		4	SCREW ISO4762 M8X30 A4 80	
1160	311103-0401		6	PARALLEL PIN ISO 2338 8M6X20 A1	
1170	90458-0305		4	CABLE GLAND, M12X1,5, NO.5311 1000	
1180	312105-0366		4	SCREW M6S ISO 4017 M6X12 A480	
1190	312115-0368		22	SCREW ISO4762 M6X16 A4 80	
120	2805167-0000		4	WASHER	
1200	312605-0316		4	HEXAGON NUT, M6M M6 A280	
1210	312155-0329		4	SCREW DIN 7991 MF6S M5X16 A4 70	
1220	315105-0153		36	WASHER BRB 6,4X12 RFR	
1240	90287-0312		14	SCREW M6S ISO 4014 M6X75 A480	
1250	312105-0489		4	SCREW M6S ISO 4017 M10X16 A480	
1260	312105-0457		9	SCREW M6S ISO 4014 M8X35 A480	
1270	312105-0293		18	SCREW M6S ISO 4017 M4X16 A470	
1290	312105-0368		6	SCREW M6S ISO 4017 M6X16 A480	
130	2826678-0000		2	SUPPORT	
1300	312115-0291		10	SCREW ISO4762 M4X12 A4 80	
1320	312115-0329		4	SCREW ISO4762 M5X16 A4 80	
1330	312115-0370		8	SCREW ISO4762 M6X20 A4 80	
1340	312115-0451		8	SCREW ISO4762 M8X20 A4 80	
1350	90091-0058		2	RADIAL SEAL 120X150X12 MM	
1360	315221-0169		4	RADIAL SEAL 30X47X7 MM	
1370	315221-0183		4	RADIAL SEAL 40X52X7 MM	
1380	315753-0117		8	RETAINING RING FOR BORE DIN 472 22 A2	
1390	315106-0173		9	WASHER ISO 7089-10-200 HV A4	
140	2805209-0000		2	LOCK NUT	
1410	315105-0165		2	WASHER BRB 8,4X16 RFR	
1450	312115-0372		4	SCREW ISO4762 M6X25 A4 80	
1470	90287-0154		4	SCREW, SOCK.SET DOGPOINT M6X10	
150	2878105-0000		4	SHAFT	
1570	315105-0136		28	WASHER BRB 4,3X8 RFR	
160	2805193-0000		8	BUSHING	
1660	315202-0303		2	O-RING 59,5X3 MM	
1670	315202-0242		2	O-RING 124,3X5,7 MM	
1680	315753-0121		8	RETAINING RING FOR BORE DIN 472 28 A2	
170	2805183-0000		2	CAP	
1700	312115-0453		2	SCREW ISO4762 M8X25 A4 80	
1720	315202-0329		2	O-RING 189,3X5,7 MM	
1760	90600-0415		2	GEARS, PLANETARY FC-A25G-29	
1770	90330-0026		4	PLUG, EXT. G-THREAD, G1/4	
1780	312109-0380		8	SCREW M6S ISO 4017 M6X50 A480	
1790	312115-0327		2	SCREW ISO4762 M5X12 A4 80	
180	2807182-0000		2	CLAMP	
1800	312180-0364		2	SCREW ISO7379 H6X10	
1820	90600-0412		2	CARRIAGE, SSR15XV1 QZ SS HH FMS	
1830	90214-0093		8	BALL BEARING, 12X28X8 MM	
1850	90600-0808		2	CAM ROLLER 12X30X40 MM, CFT 12 M UU N	
1860	311103-0348		2	PARALLEL PIN ISO 2338 6M6X10 A1	
1880	315705-0298		2	PARALLEL KEY W. ROUND ENDS 10X8X30 MM	
1890	312115-0499		4	SCREW ISO4762 M10X40 A4 80	
190	2902467-0000		2	SHAFT	
1900	312115-0493		4	SCREW ISO4762 M10X25 A4 80	
1910	90296-0072	L	1	SHELL OMALA OIL 150, CAN 20 LITRES	
200	2807183-0000		2	SCREW	
210	2902466-0000		2	SHAFT	
220	2878099-0000		2	BUSHING	
230	2805171-0000		1	VOLUME BULGE	
240	2805172-0000		1	VOLUME BULGE	

Machine Type | Group Description | Used-In | Group Number | Page No

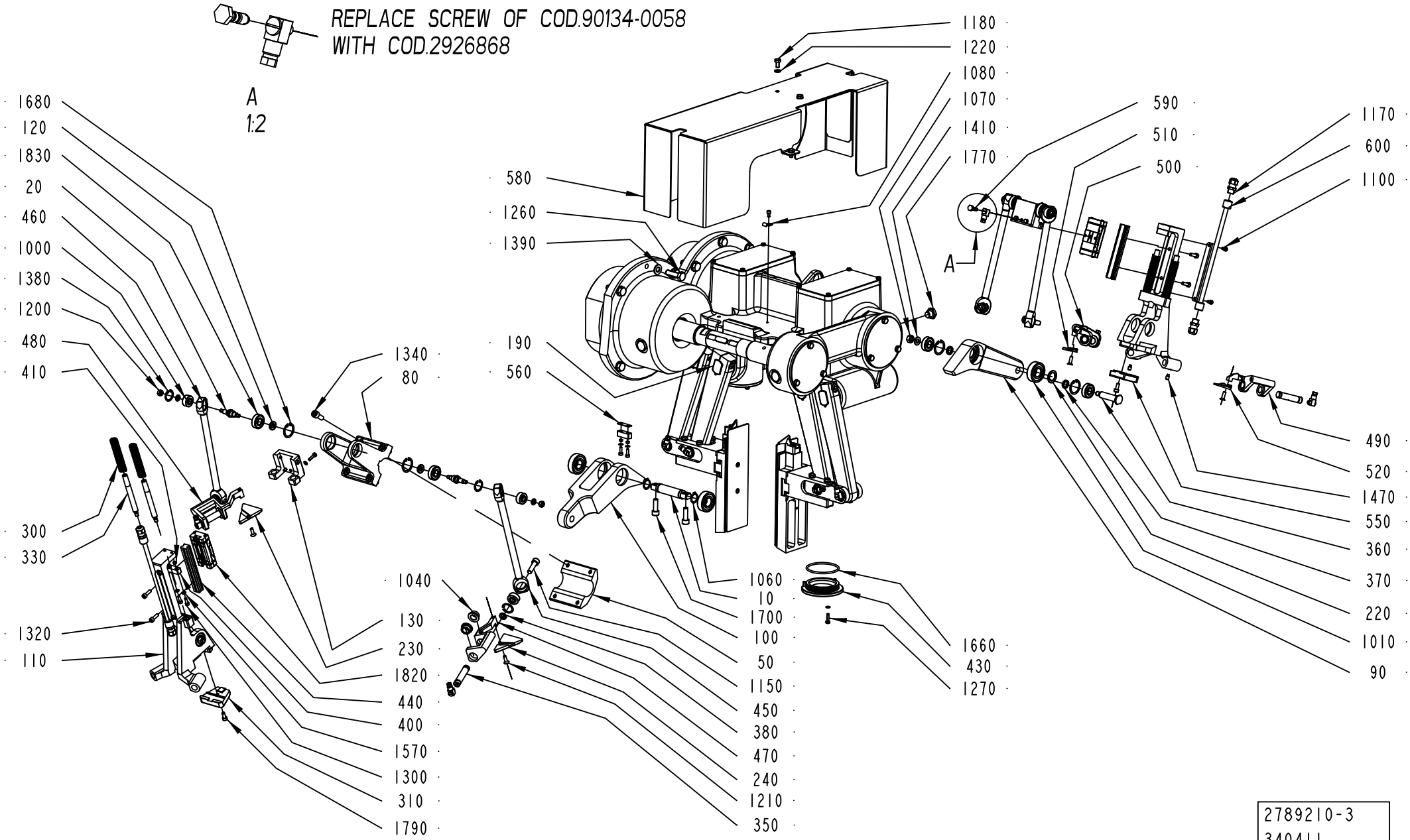
REPLACE SCREW OF COD.90134-0058
WITH COD.2926868
A
1:2
1680
120
1830
20
460
1000
1380
1200
480
410
300
330
1320
110
1340
80
1040
130
230
1820
440
400
1570
1300
310
1790
580
1260
1390
190
560
1060
10
1700
100
50
1150
450
380
470
240
1210
350
1180
1220
1080
1070
1410
1770
A
590
510
500
1660
430
1270
1170
600
1100
490
520
1470
550
360
370
220
1010
90
2789210-3
340411

Pos	Part No	UN	Qty	Description	Page No
- (Cont'd)					
250	2761928-0000		2	KNOB	
260	2826679-0000		2	SHAFT	
270	2789232-0000		2	FLANGE	
280	2805185-0000		2	FLANGE	
290	2805198-0000		2	CAP	
300	2807185-0000		4	SPRING	
310	2805170-0000		1	PLATE	
320	2805208-0000		4	PLUG	
330	2805169-0000		4	SHAFT	
340	2807181-0000		2	SUPPORT	
350	2878104-0000		4	SHAFT	
360	2805210-0000		2	SHAFT	
370	2807149-0000		4	SPACER	
380	541165-0000		4	WASHER	
390	2807151-0000		8	BUSHING	
400	2805184-0000		5	DAMPER	
410	2807147-0000		10	SPACER	
420	2807160-0000		1	BOX	
430	2807157-0000		2	CAP	
440	2789231-0000		2	GUIDE	
450	2826717-0000		2	LEVER	
460	2826718-0000		2	LEVER	
470	2826713-0000		1	SUPPORT	
480	2826714-0000		1	SUPPORT	
490	2836243-0000		1	SUPPORT	
500	2836242-0000		1	SUPPORT	
510	2836248-0000		1	TOOL	
520	2836247-0000		1	TOOL	
530	2838219-0000		2	LOCK WASHER	
540	2838220-0000		2	ROUND NUT	
550	2836244-0000		1	PLATE	
560	2878048-0000		3	SHIM	
570	2902472-0000		4	WASHER	
580	2926871-0000		1	COVER	
590	2926868-0000		2	SCREW	
600	2926880-0000		2	SUPPORT	
700	2826710-0100		1	FORMING PLATE	**6-29**
710	2838217-0100		1	FORMING PLATE	**6-31**

Pos	Part No	UN	Qty	Description	Page No

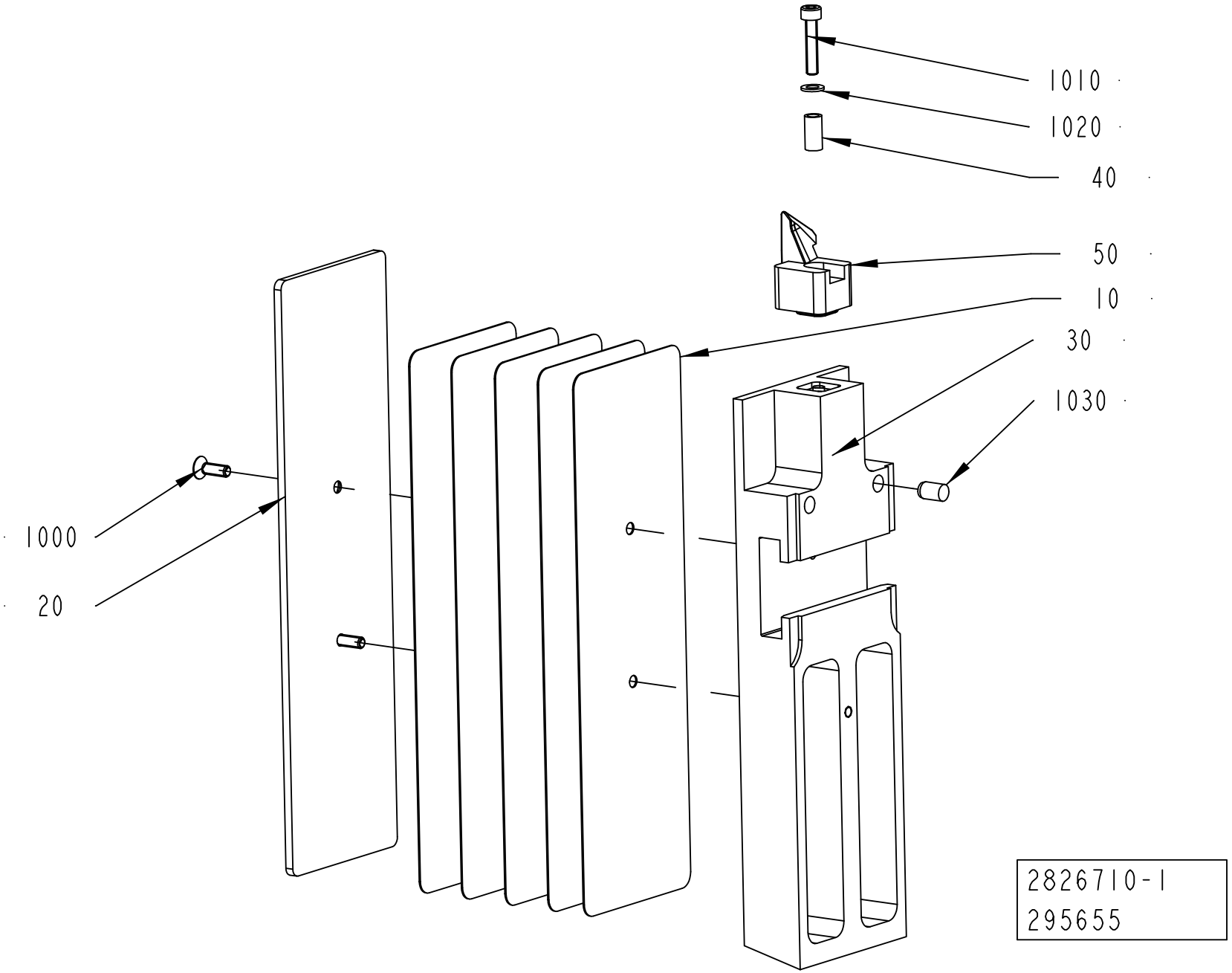
1010
1020
40
50
10
30
1030
1000
20
2826710-1
295655

ECM: 318903 - 20080101
Group number: 2826710-0100
Assembly Drawing: 2826710-1_1_AB

Pos	Part No	UN	Qty	Description	Page No
TGA 0500SQ					
010	2838224-0000		4	SHIM	
020	2895718-0000		1	VOLUME BULGE	
030	2838227-0000		1	PUSHER	
TGA 0750SQ					
010	2843899-0000		4	SHIM	
020	2843900-0000		1	VOLUME BULGE	
030	2843902-0000		1	PUSHER	
TGA 1000SQ					
010	2743397-0000		5	SHIM	
020	2756091-0000		1	VOLUME BULGE	
030	2805182-0000		1	PUSHER	
Common Parts					
040	2807152-0000		1	SPACER	
050	2836249-0000		1	TOOL	
1000	312155-0291		2	SCREW DIN 7991 MF6S M4X12 A4 70	
1010	312115-0295		1	SCREW ISO4762 M4X20 A4 80	
1020	315105-0136		1	WASHER BRB 4,3X8 RFR	
1030	311103-0348		1	PARALLEL PIN ISO 2338 6M6X10 A1	

Pos	Part No	UN	Qty	Description	Page No

Machine Type | Group Description | Used-In | Group Number | Page No

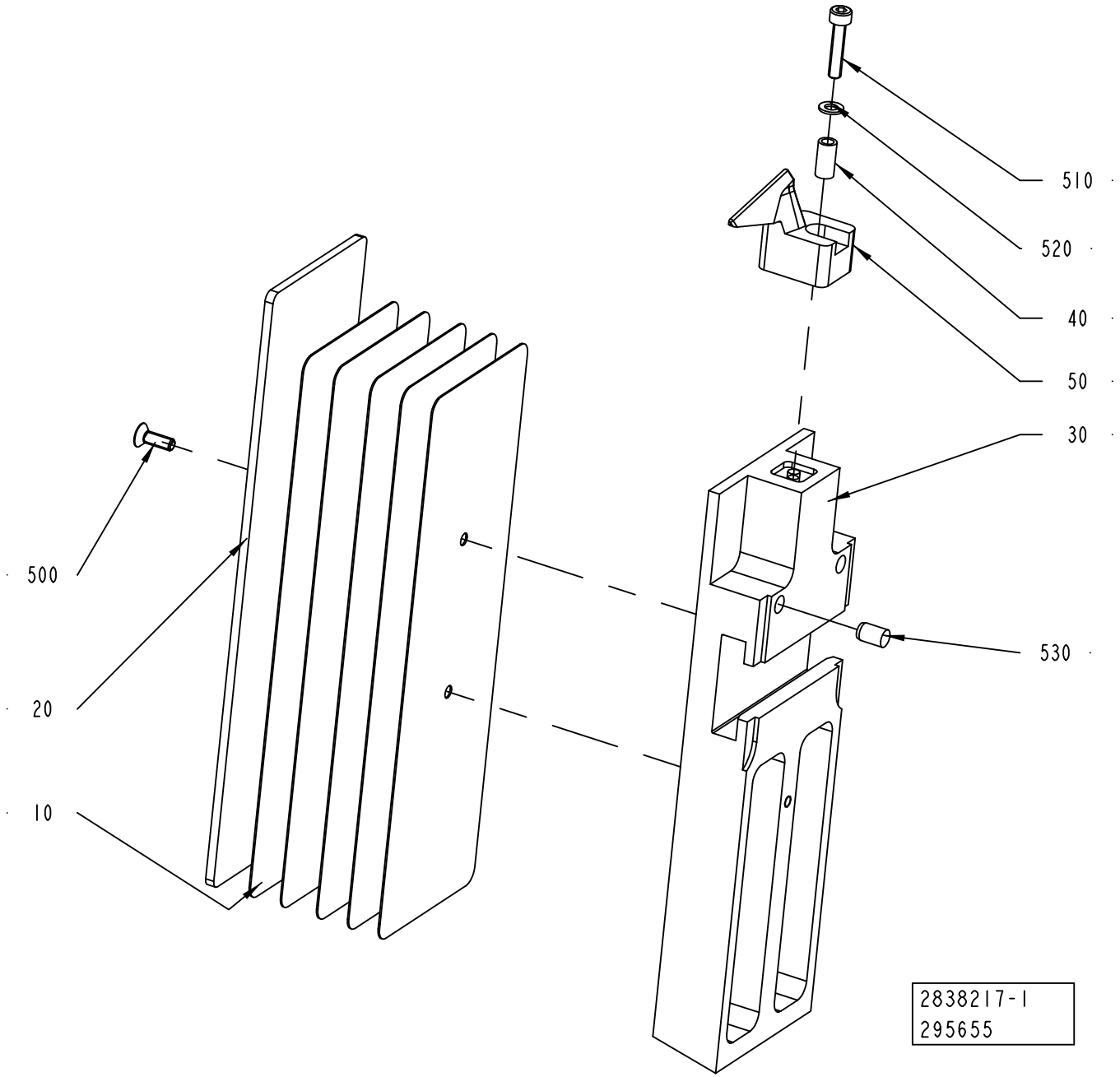
510
520
40
50
30
500
20
10
530
2838217-1
295655

ECM: 318904 - 20080101
Group number: 2838217-0100
Assembly Drawing: 2838217-1_1_AB

Pos	Part No	UN	Qty	Description	Page No
TGA 0500SQ					
010	2838224-0000		4	SHIM	
020	2895718-0000		1	VOLUME BULGE	
030	2838227-0000		1	PUSHER	
TGA 0750SQ					
010	2843899-0000		4	SHIM	
020	2843900-0000		1	VOLUME BULGE	
030	2843902-0000		1	PUSHER	
TGA 1000SQ					
010	2743397-0000		5	SHIM	
020	2756091-0000		1	VOLUME BULGE	
030	2805182-0000		1	PUSHER	
Common Parts					
040	2807152-0000		1	SPACER	
050	2836250-0000		1	TOOL	
500	312155-0291		2	SCREW DIN 7991 MF6S M4X12 A4 70	
510	312115-0295		1	SCREW ISO4762 M4X20 A4 80	
520	315105-0136		1	WASHER BRB 4,3X8 RFR	
530	311103-0348		1	PARALLEL PIN ISO 2338 6M6X10 A1	

Pos	Part No	UN	Qty	Description	Page No

Machine Type | Group Description | Used-In | Group Number | Page No

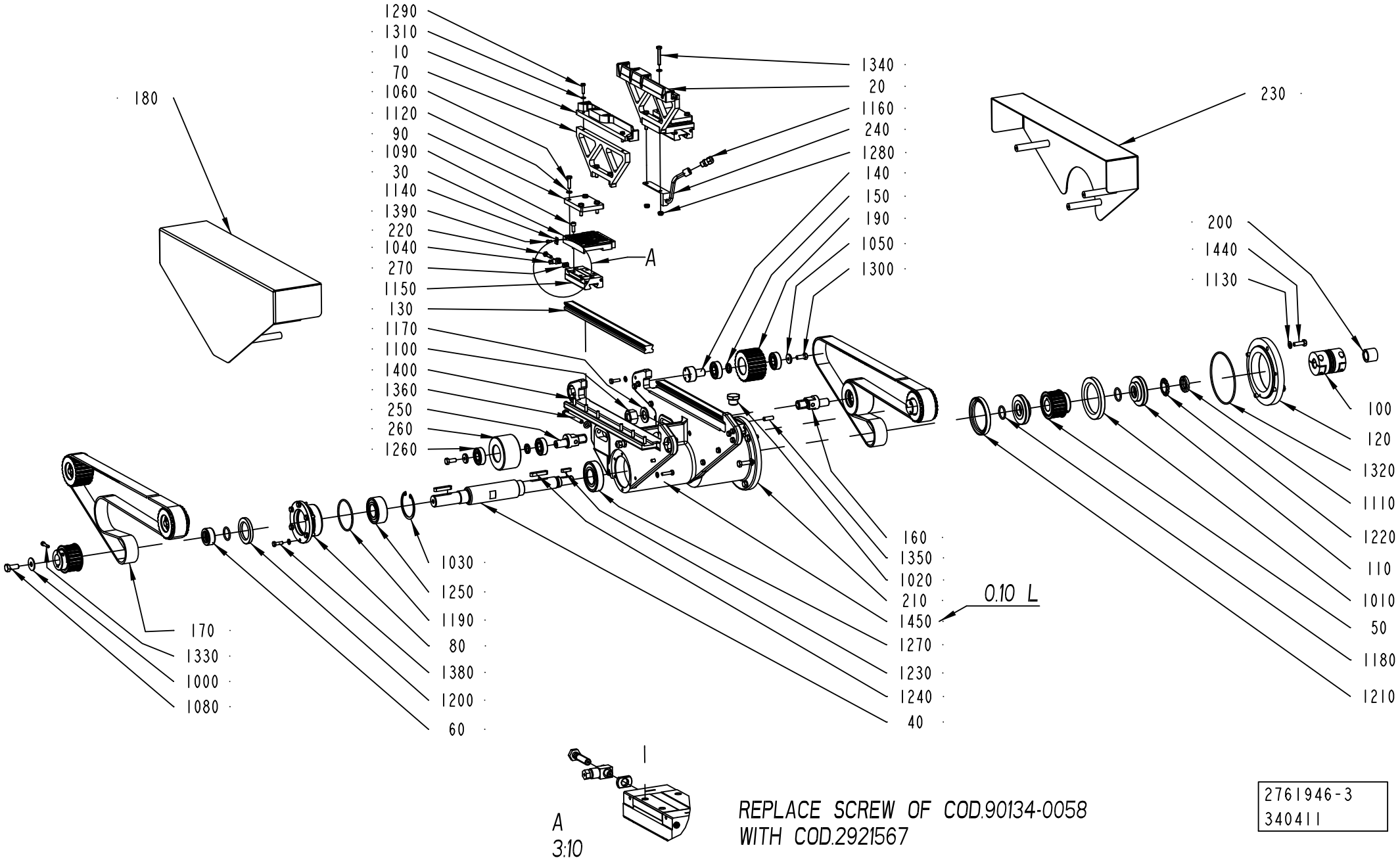

2761946-3
340411

ECM: 397501 - 20090505
Group number: 2761946-0100
Assembly Drawing: 2761946-3_1_AC

Pos	Part No	UN	Qty	Description	Page No
-					
010	2761950-0000		1	CRADLE	
020	2761951-0000		1	CRADLE	
030	2926876-0000		2	PLATE	
040	2789223-0000		1	MAIN SHAFT	
050	2926826-0000		2	DRIVE PULLEY	
060	2761957-0000		1	SPACER	
070	2761958-0000		2	CRADLE	
080	2826703-0000		1	FLANGE	
090	2926875-0000		2	PLATE	
100	2761998-0000		1	COUPLING	
1000	90005-0140		1	WASHER PLAIN ROUND 10,5(M10)/30, H=2	
1010	90091-0056		1	RADIAL SEAL 70X100X10 MM	
1020	90330-0037		3	PLUG, EXT. G-THREAD, G1/2	
1030	90458-0048		1	RETAINING RING FOR HOLE, 62X2 MM	
1040	90134-0058		2	CONNECTION	
1050	315125-0165		6	WASHER TBRSB 8,4X26X5 A4	
1060	312105-0372		16	SCREW M6S ISO 4017 M6X25 A480	
1080	312105-0491		1	SCREW M6S ISO 4017 M10X20 A480	
1090	312115-0366		8	SCREW ISO4762 M6X12 A4 80	
110	2762014-0000		2	SPACER	
1100	312605-0326		2	HEXAGON NUT, M6M M20 A280	
1110	312805-0105		1	NUT ROUND WITH SLOTS M25X1,5 FE	
1120	315105-0153		36	WASHER BRB 6,4X12 RFR	
1130	315105-0165		12	WASHER BRB 8,4X16 RFR	
1140	90165-0058		2	PIPE CLIP FOR TUBE D=2,5 MM	
1150	90600-3595		2	CARRIAGE, SSR25XW1SSHHC1FME	
1160	90458-0313		3	CABLE GLAND, M12X1,5, NO.5311 1100	
1170	315105-0192		2	WASHER BRB 21X36 RFR	
1180	315202-0218		3	O-RING 26,2X3 MM	
1190	315202-0305		1	O-RING 69,5X3 MM	
120	2826724-0000		1	FLANGE	
1200	315221-0185		1	RADIAL SEAL 40X62X7 MM	
1210	315221-0221		1	RADIAL SEAL 70X90X10 MM	
1220	315410-0105		1	LOCK WASHER MB 5 D=25 H=1,25	
1230	315705-0234		1	PARALLEL KEY W. ROUND ENDS 6X6X25 MM	
1240	315705-0271		2	PARALLEL KEY W. ROUND ENDS 8X7X45 MM	
1250	321330-0106		1	ANG. BALL BEAR, 30X62X23,8 MM	
1260	90214-0189		12	BALL BEARING, 17X40X12 MM	
1270	90458-2363		1	BALL BEARING, 35X72X17 MM	
1280	312812-0316		2	HEXAGON NUT, NY-LOCK M6 A480	
1290	312105-0331		4	SCREW M6S ISO 4017 M5X20 A480	
130	2774953-0000		2	RAIL	
1300	312105-0451		6	SCREW M6S ISO 4017 M8X20 A480	
1310	315106-0146		4	WASHER ISO 7089-5-200 HV A4	
1320	315202-0315		1	O-RING 119,5X3 MM	
1330	312115-0333		2	SCREW ISO4762 M5X25 A4 80	
1340	312109-0376		2	SCREW M6S ISO 4017 M6X35 A480	
1350	311103-1403		1	PARALLEL PIN ISO 2338 8M6X24 A1	
1360	312109-0467		2	SCREW M6S ISO 4017 M8X80 A480	
1380	312105-0370		18	SCREW M6S ISO 4017 M6X20 A480	
1390	312109-0374		2	SCREW M6S ISO 4017 M6X30 A480	
140	2761961-0000		4	SHAFT	
1400	312115-0366		12	SCREW ISO4762 M6X12 A4 80	
1440	312105-0453		10	SCREW M6S ISO 4017 M8X25 A480	
1450	90296-0072	L	1	SHELL OMALA OIL 150, CAN 20 LITRES	
150	2761962-0000		6	SPACER	
160	2941043-0000		1	COLUMN	
170	2926836-0000		2	BELT	
180	2926861-0000		1	COVER	
190	2926822-0000		4	PULLEY	
200	2826723-0000		1	SPACER	
210	2826702-0000		1	BODY	
220	2921567-0000		2	SCREW	
230	2926862-0000		1	COVER	
240	2926870-0000		1	PIPE	
250	2951097-0000		1	COLUMN	
260	2926834-0000		2	PULLEY	
270	2951104-0000		2	SPACER	

Machine Type	Group Description	Used-In	Group Number	Page No

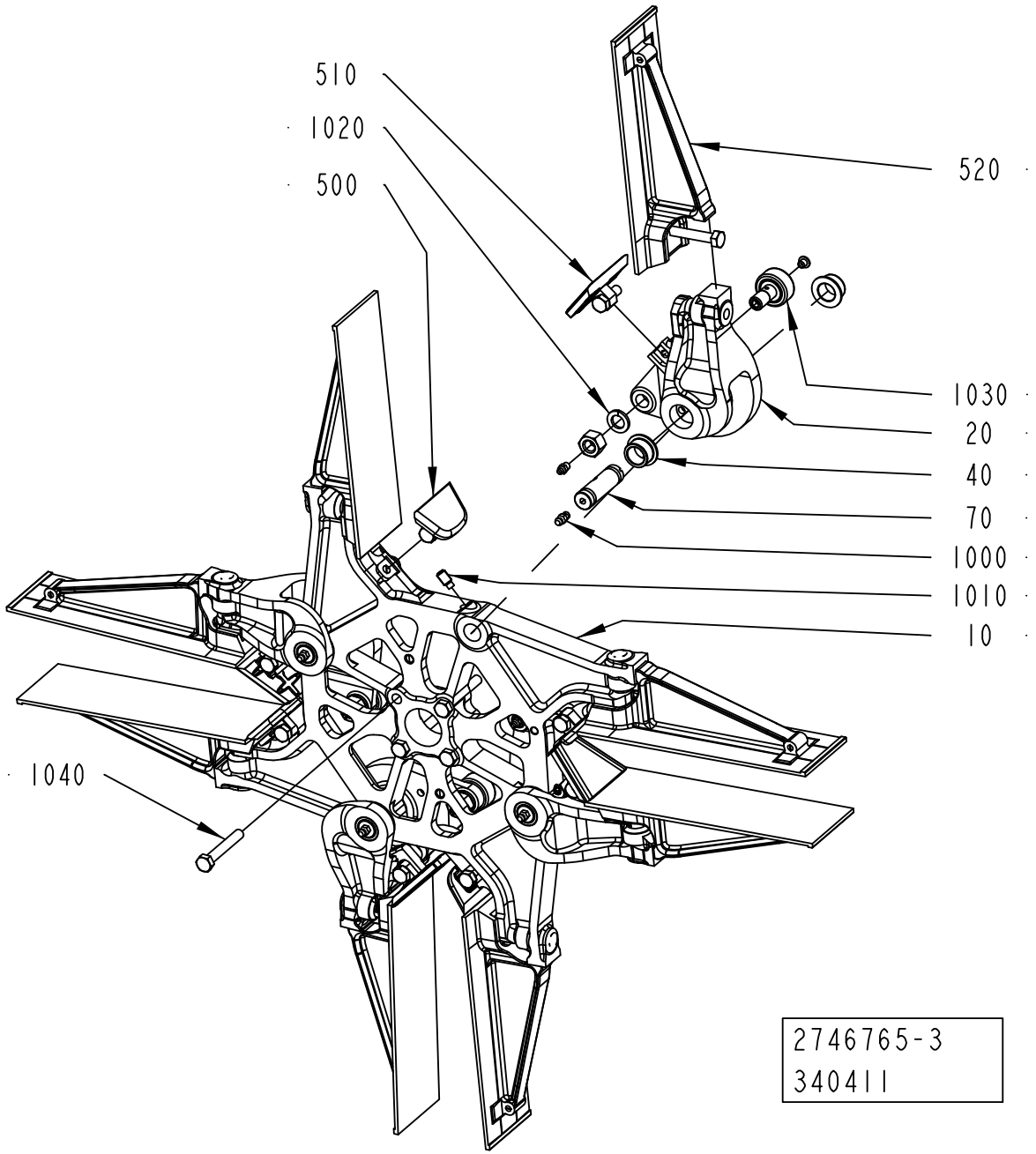
510
1020
500
520
1030
20
40
70
1000
1010
10
1040
2746765-3
340411

ECM: 383367 - 20090115
Group number: 2746765-0100
Assembly Drawing: 2746765-3_1_AB

Pos	Part No	UN	Qty	Description	Page No
-					
010	2798294-0000		1	WHEEL	
	2798290-0000		*1*	*WHEEL*	
020	2798295-0000		4	ARM	
	2798291-0000		*1*	*ARM*	
040	2805193-0000		8	BUSHING	
070	2878100-0000		4	SHAFT	
1000	90286-0013		4	GREASE NIPPLE STRAIGHT, H1 M6X1 2346	
1010	90287-0166		4	SCREW, SOCK.SET DOGPOINT M8X16	
1020	315402-0178		4	LOCK WASHER FBB 12,2	
1030	90600-0808		4	CAM ROLLER 12X30X40 MM, CFT 12 M UU N	
1040	312105-0460		4	SCREW M6S ISO 4014 M8X45 A480	
500	2902422-0100		4	BOTTOM	**6-37**
510	2902423-0100		4	BOTTOM	**6-39**
520	2902421-0100		8	FLAP	**6-41**

Pos	Part No	UN	Qty	Description	Page No

Machine Type | Group Description | Used-In | Group Number | Page No

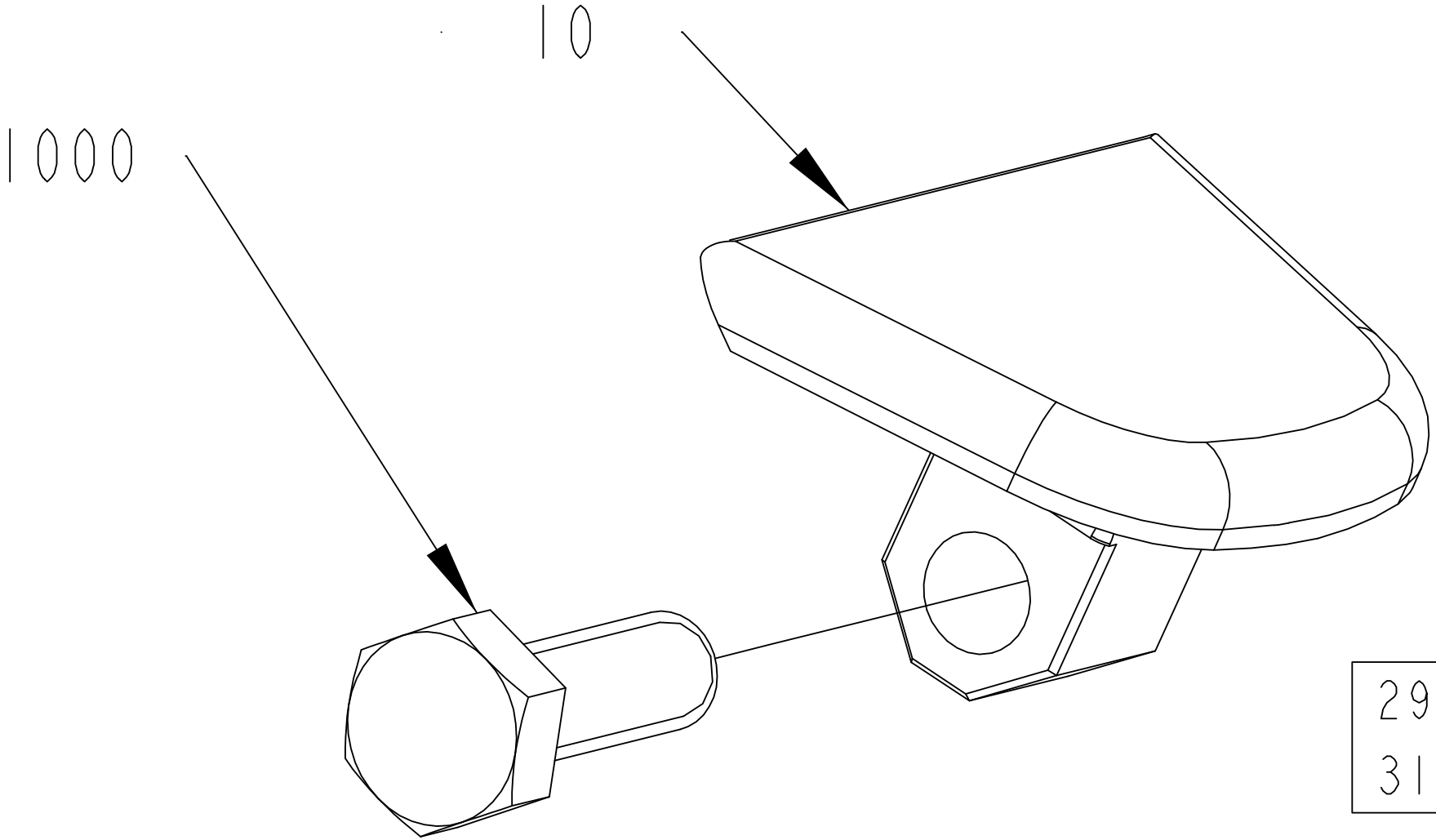
10
1000
2902422-1
311518

ECM: 318638 - 20080101
Group number: 2902422-0100
Assembly Drawing: 2902422-1_1_AA

Pos	Part No	UN	Qty	Description	Page No
TGA 0500SQ					
010	2866704-0000		1	BOTTOM	
TGA 0750SQ					
010	2866703-0000		1	BOTTOM	
TGA 1000SQ					
010	2798299-0000		1	BOTTOM	
Common Parts					
1000	312105-0453		1	SCREW M6S ISO 4017 M8X25 A480	

Pos	Part No	UN	Qty	Description	Page No

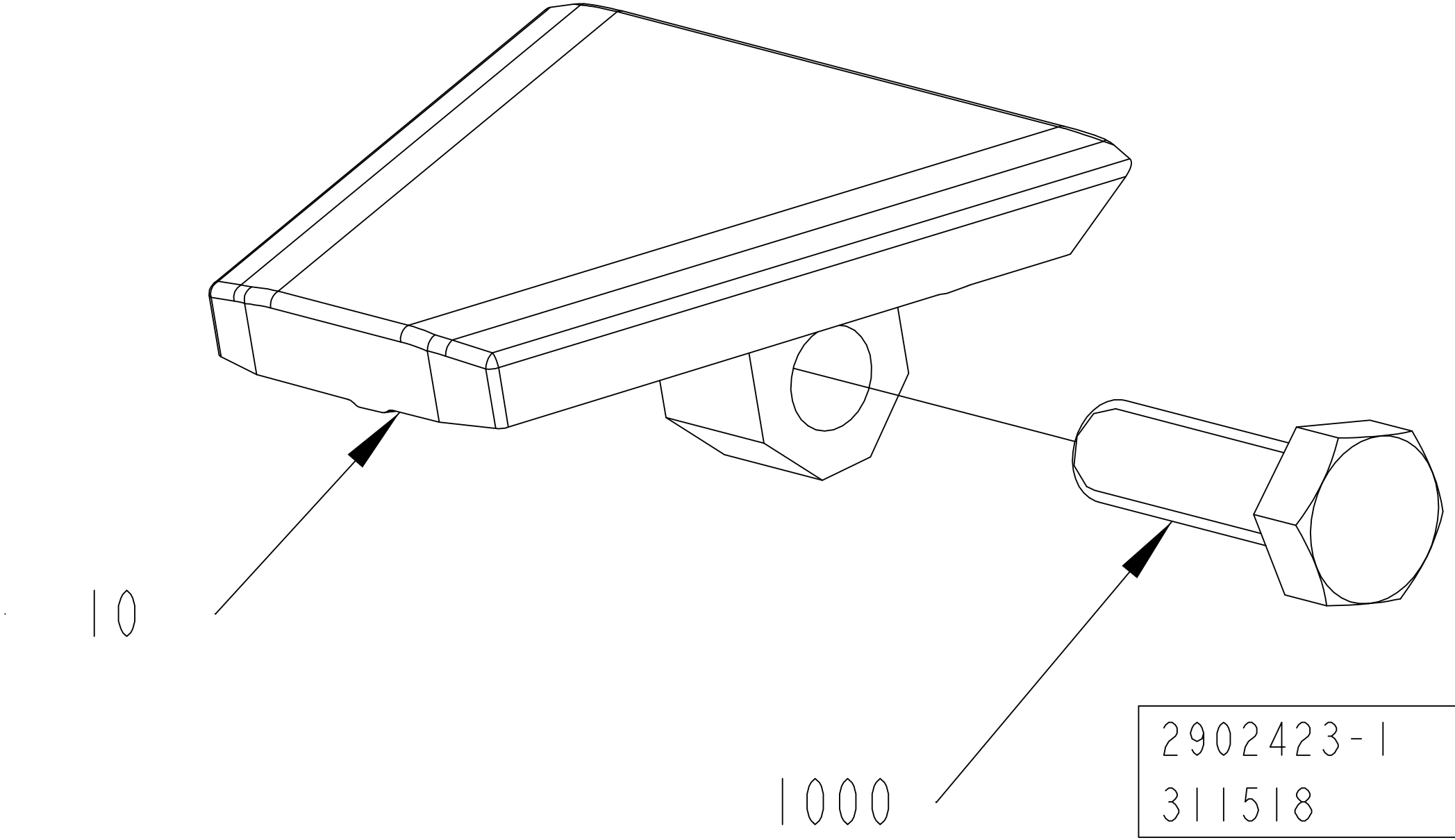
10
1000
2902423-1
311518

ECM: 318639 - 20080101
Group number: 2902423-0100
Assembly Drawing: 2902423-1_1_AA

Pos	Part No	UN	Qty	Description	Page No
TGA 0500SQ					
010	2866707-0000		1	BOTTOM	
TGA 0750SQ					
010	2866706-0000		1	BOTTOM	
TGA 1000SQ					
010	2798298-0000		1	BOTTOM	
Common Parts					
1000	312105-0453		1	SCREW M6S ISO 4017 M8X25 A480	

Pos	Part No	UN	Qty	Description	Page No

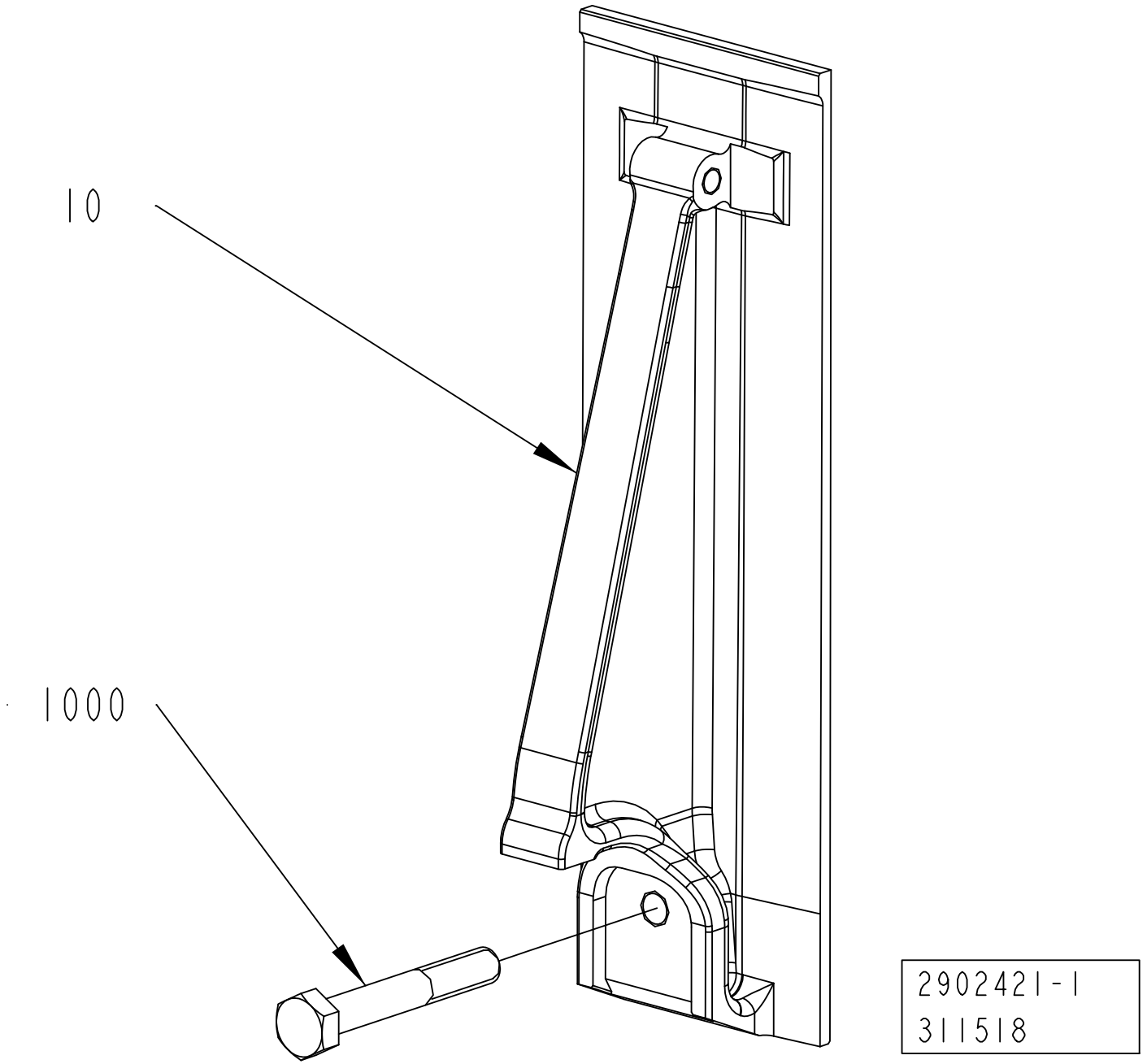
10
1000
2902421-1
311518

ECM: 318636 - 20080101
Group number: 2902421-0100
Assembly Drawing: 2902421-1_1_AA

Pos	Part No	UN	Qty	Description	Page No
-					
010	2798296-0000		1	FLAP	
	2798292-0000		*1*	*FLAP*	
1000	312105-0462		1	SCREW M6S ISO 4014 M8X55 A480	

Pos	Part No	UN	Qty	Description	Page No

FLAP HEATER

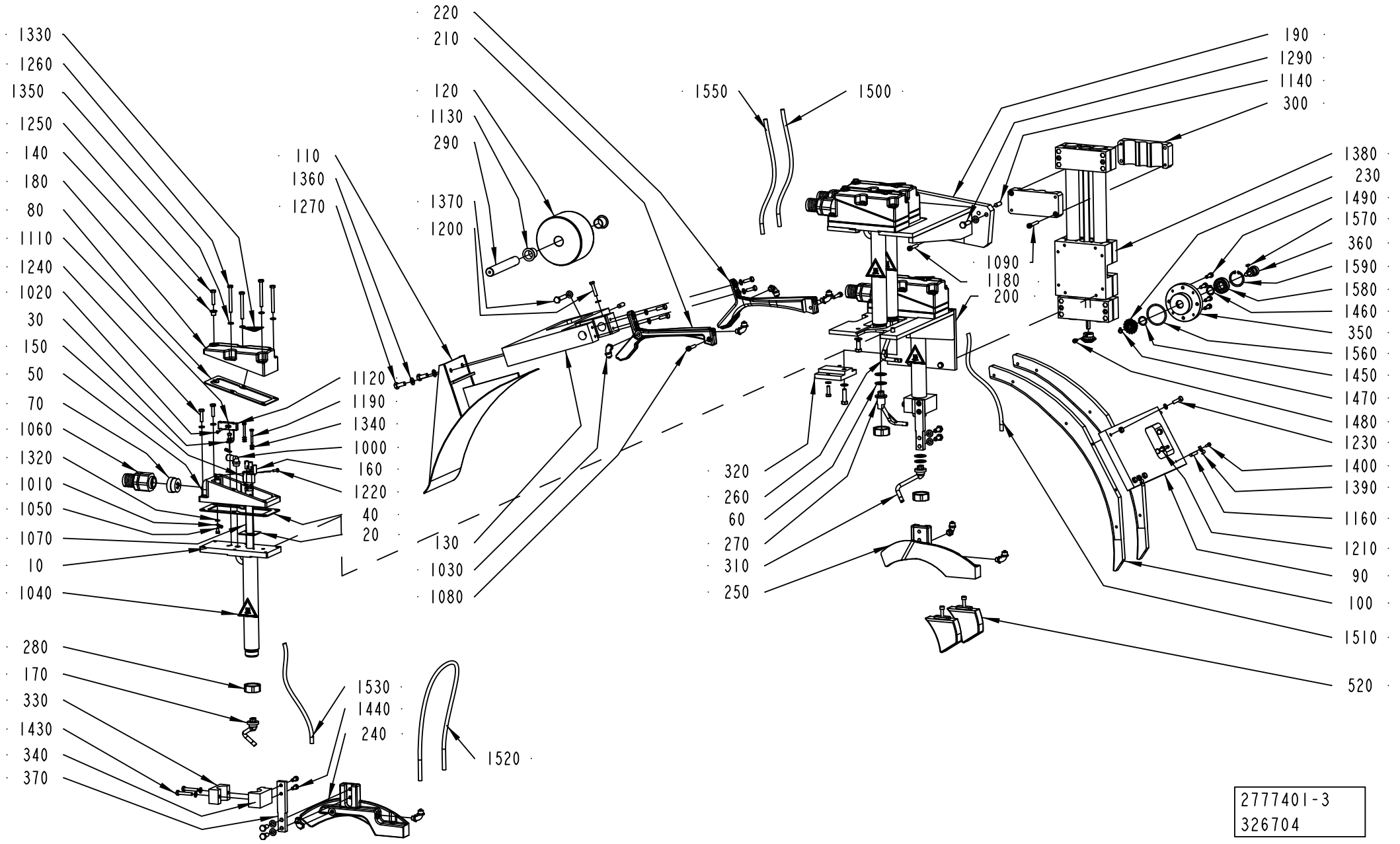
1330
1260
1350
1250
140
180
80
1110
1240
1020
30
150
50
70
1060
1320
1010
1050
1070
10
1040
280
170
330
1430
340
370
220
210
120
1130
290
1370
1200
110
1360
1270
1120
1190
1340
1000
160
1220
40
20
130
1030
1080
1530
1440
240
1520
1550
1500
190
1290
1140
300
1090
1180
200
320
260
60
270
310
250
1380
230
1490
1570
360
1590
1580
1460
350
1560
1450
1470
1480
1230
1400
1390
1160
1210
90
100
1510
520
2777401-3
326704

ECM: 389569 - 20090505
Group number: 2777401-0200
Assembly Drawing: 2777401-3_1_AB

This list covers pages from 6-42 to 6-45

Pos	Part No	UN	Qty	Description	Page No
-					
010	2503429-0000		4	HEATING PIPE	
020	1498077-0000		4	GASKET	
030	1519206-0000		4	SUPPORT	
040	1285312-0000		4	GASKET	
050	1512114-0000		4	COVER	
060	263673-0000		10	GASKET	
070	1499092-0000		4	INSERT	
080	1512115-0000		4	GASKET	
090	2777418-0000		1	SUPPORT	
100	2878047-0000		2	GUIDE	
1000	90458-2958		4	ELBOW PIPE JOINT, EXT.THREAD, D=8MM-G1/4	
1010	353101-0132		8	CABLE SHOE 1,5-2,5MM2 M5 BLUE	
1020	312155-0226		4	SCREW DIN 7991 MF6S M3X12 A4 70	
1030	342931-0121		8	ELBOW 90 COUPL.,EXT.THREAD 8/6-G1/8"	
1040	359710-0001		4	WARNING SIGN ISO, HOT SURFACE	
1050	312125-0323		8	SCREW ISO 1207 M5X8 A4	
1060	353247-0005		4	HOSE GLAND EMC PG21 EXTENDED	
1070	90206-0132		4	HOT AIR ELEMENT	
1080	312115-0374		2	SCREW ISO4762 M6X30 A4 80	
1090	312115-0378		2	SCREW ISO4762 M6X40 A4 80	
110	2777422-0000		1	TOP SECTION	
1110	90458-0136		4	FEMALE PLUG, COD 220-0381	
1120	90458-0135		4	MALE PLUG, COD.220-0397	
1130	90240-0265		2	FLANGE BUSHING, 20X23X21 MM	
1140	311103-0405		4	PARALLEL PIN ISO 2338 8M6X30 A1	
1160	311103-0353		2	PARALLEL PIN ISO 2338 6M6X20 A1	
1180	312115-0376		4	SCREW ISO4762 M6X35 A4 80	
1190	312105-0299		8	SCREW M6S ISO 4017 M4X30 A470	
120	2685813-0000		1	BOWL	
1200	312105-0374		1	SCREW M6S ISO 4014 M6X30 A480	
1210	312105-0378		2	SCREW M6S ISO 4014 M6X40 A480	
1220	312105-0289		8	SCREW M6S H4X10 A4 70 ISO4017/DIN933	
1230	312105-0370		16	SCREW M6S ISO 4017 M6X20 A480	
1240	312105-0372		8	SCREW M6S ISO 4017 M6X25 A480	
1250	312109-0374		4	SCREW M6S ISO 4017 M6X30 A480	
1260	312105-0382		16	SCREW M6S ISO 4014 M6X60 A480	
1270	312105-0451		12	SCREW M6S ISO 4017 M8X20 A480	
1290	312105-0455		4	SCREW M6S ISO 4017 M8X30 A480	
130	2807166-0000		1	BRACKET	
1320	315105-0146		8	WASHER BRB 5,3X10 RFR	
1330	359705-0015		4	WARNING SIGN ISO, RISK OF ELECTRIC SHOCK	
1340	315105-0136		24	WASHER BRB 4,3X8 RFR	
1350	315105-0153		48	WASHER BRB 6,4X12 RFR	
1360	315105-0165		18	WASHER BRB 8,4X16 RFR	
1370	312105-0459		2	SCREW M6S ISO 4014 M8X40 A480	
1380	90600-0863		1	LINEAR UNIT, 7000 22000 2051	
1390	90165-0056		2	PIPE CLIP FOR TUBE D=4 MM	
140	1519205-0000		4	BUSHING	
1400	312115-0287		2	SCREW ISO4762 M4X8 A4 80	
1430	312109-0376		4	SCREW M6S ISO 4017 M6X35 A480	
1440	312115-0368		4	SCREW ISO4762 M6X16 A4 80	
1450	315202-0267		1	O-RING 16,3X2,4 MM	
1460	90141-0017		1	RETAINING RING FOR SHAFT DIN 471 17 SS	
1470	90141-0015		1	RETAINING RING FOR SHAFT DIN 471 8 SS	
1480	312115-0323		1	SCREW ISO4762 M5X8 A4 80	
1490	312115-0370		4	SCREW ISO4762 M6X20 A4 80	
150	1498999-0000		4	CLAMP	
1500	90166-0118	M	1	TUBE 8 MM PA BLACK	
1510	90166-0118	MM	325	TUBE 8 MM PA BLACK	
1520	90166-0118	MM	750	TUBE 8 MM PA BLACK	
1530	90166-0118	MM	325	TUBE 8 MM PA BLACK	
1550	90166-0118	M	1	TUBE 8 MM PA BLACK	
1560	315202-0225		1	O-RING 44,2X3 MM	
1570	315705-0135		1	PARALLEL KEY W. ROUND ENDS 3X3X12 MM	
1580	90458-0533		1	BALL BEARING, 17X35X10 MM	
1590	315753-0124		1	RETAINING RING FOR BORE DIN 472 35 A2	
160	1512463-0000		4	THERMOCOUPLE	
170	2918305-0000		1	NOZZLE	
180	1512116-0000		4	COVER	
190	2807168-0000		1	SUPPORT	
200	2807169-0000		1	FRAME	
210	2878054-0000		1	GUIDE	
220	2878055-0000		1	GUIDE	
230	2902479-0000		2	GEAR WHEEL	
240	2878132-0000		1	GUIDE	
250	2902426-0000		1	GUIDE	
260	2777402-0000		1	NOZZLE	
270	2777403-0000		1	NOZZLE	
280	1317085-0000		4	NUT	
290	2685812-0000		1	PIN	
300	2902454-0000		2	CLAMP	
310	2921156-0000		1	NOZZLE	
320	2777410-0000		2	PLATE	

Machine Type | Group Description | Used-In | Group Number | Page No

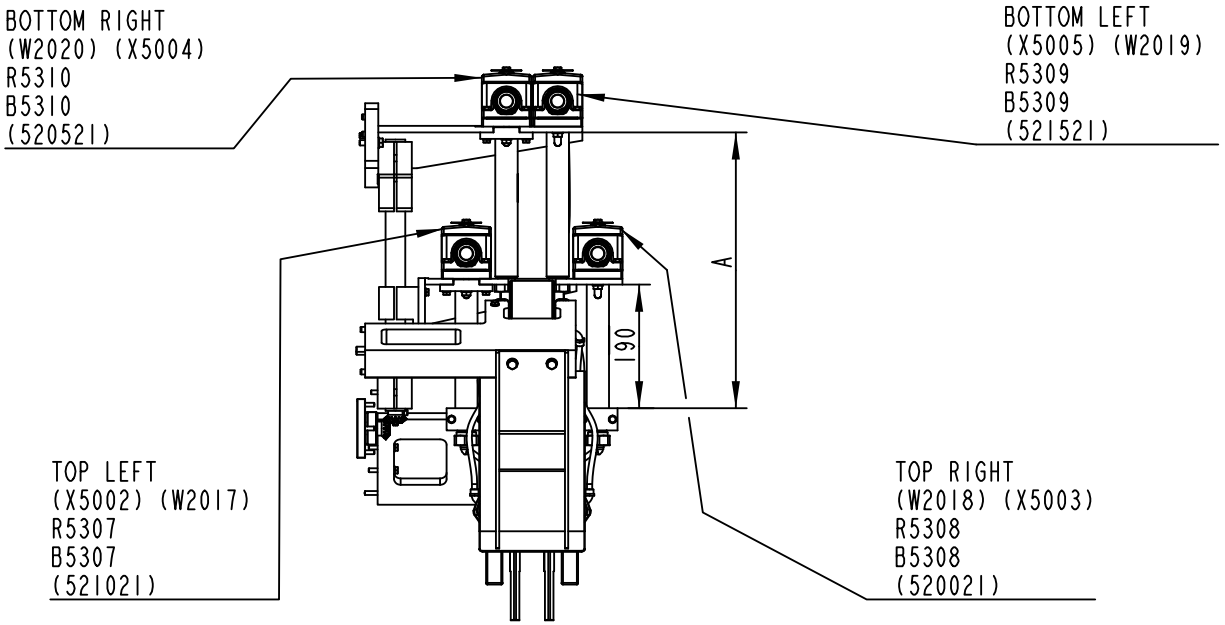

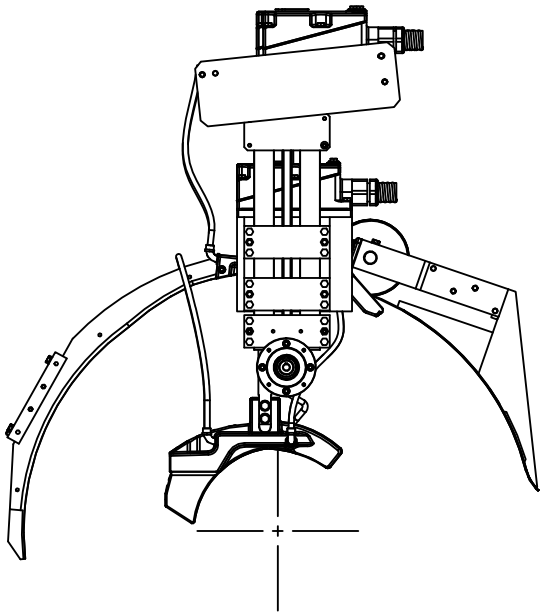

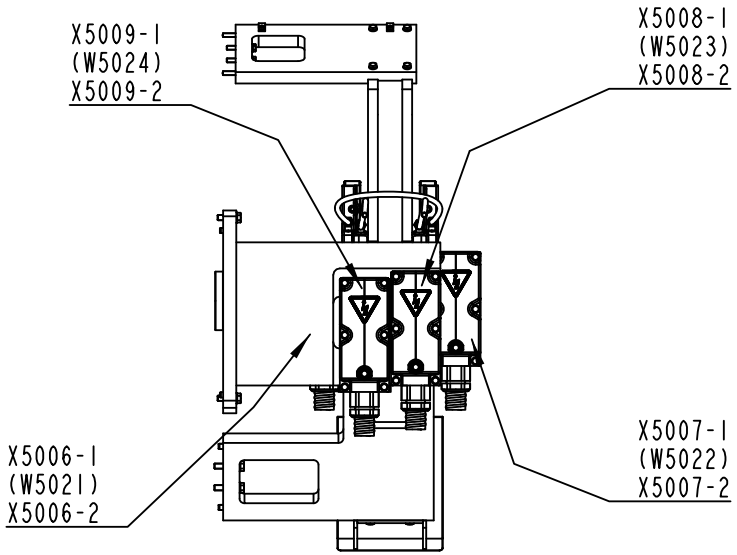

PACKAGE	A
TGA 1000 SQ.	424
TGA 750 SQ.	370
TGA 500 SQ.	314

2777401-3
326704

Pos	Part No	UN	Qty	Description	Page No
- (Cont'd)					
330	2703169-0000		2	CLAMP	
340	2703170-0000		2	CLAMP	
350	2902473-0000		1	FLANGE	
360	2902474-0000		1	SHAFT	
370	2878060-0000		2	PLATE	
520	2902424-0100		1	GUIDE	**6-47, 6-49**

Pos	Part No	UN	Qty	Description	Page No

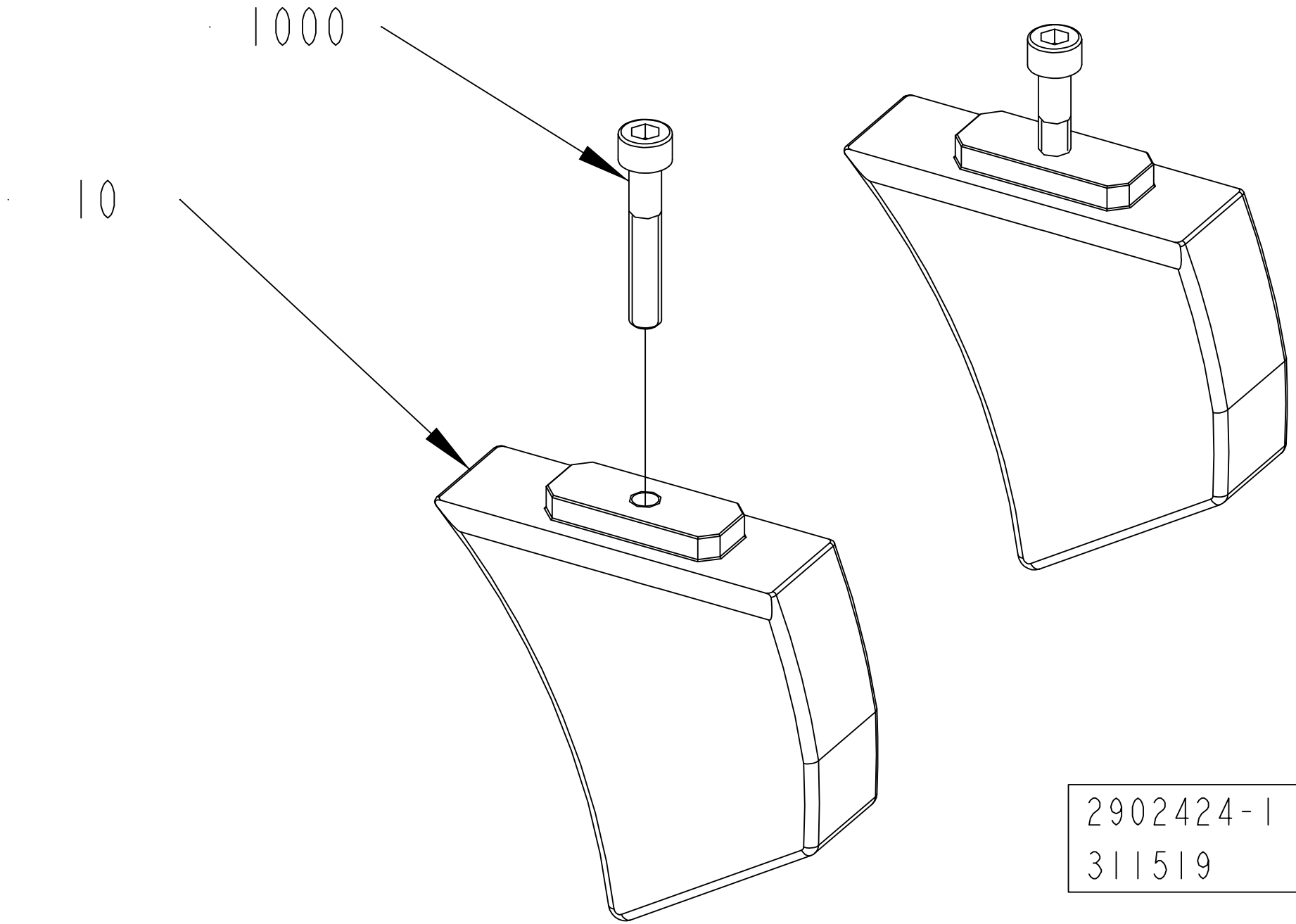
1000
10
2902424-1
311519

ECM: 383362 - 20090115
Group number: 2902424-0100
Assembly Drawing: 2902424-1_1_AA

This list covers pages from 6-46 to 6-49

Pos	Part No	UN	Qty	Description	Page No
TGA 0500SQ (See drawing on page: 6-48)					
010	2902440-0000		1	GUIDE	
020	2902441-0000		1	GUIDE	
TGA 0750SQ (See drawing on page: 6-48)					
010	2902438-0000		1	GUIDE	
020	2902439-0000		1	GUIDE	
TGA 1000SQ (See drawing on page: 6-46)					
010	2878080-0000		2	GUIDE	
Common Parts					
1000	312115-0374		2	SCREW ISO4762 M6X30 A4 80	

Pos	Part No	UN	Qty	Description	Page No

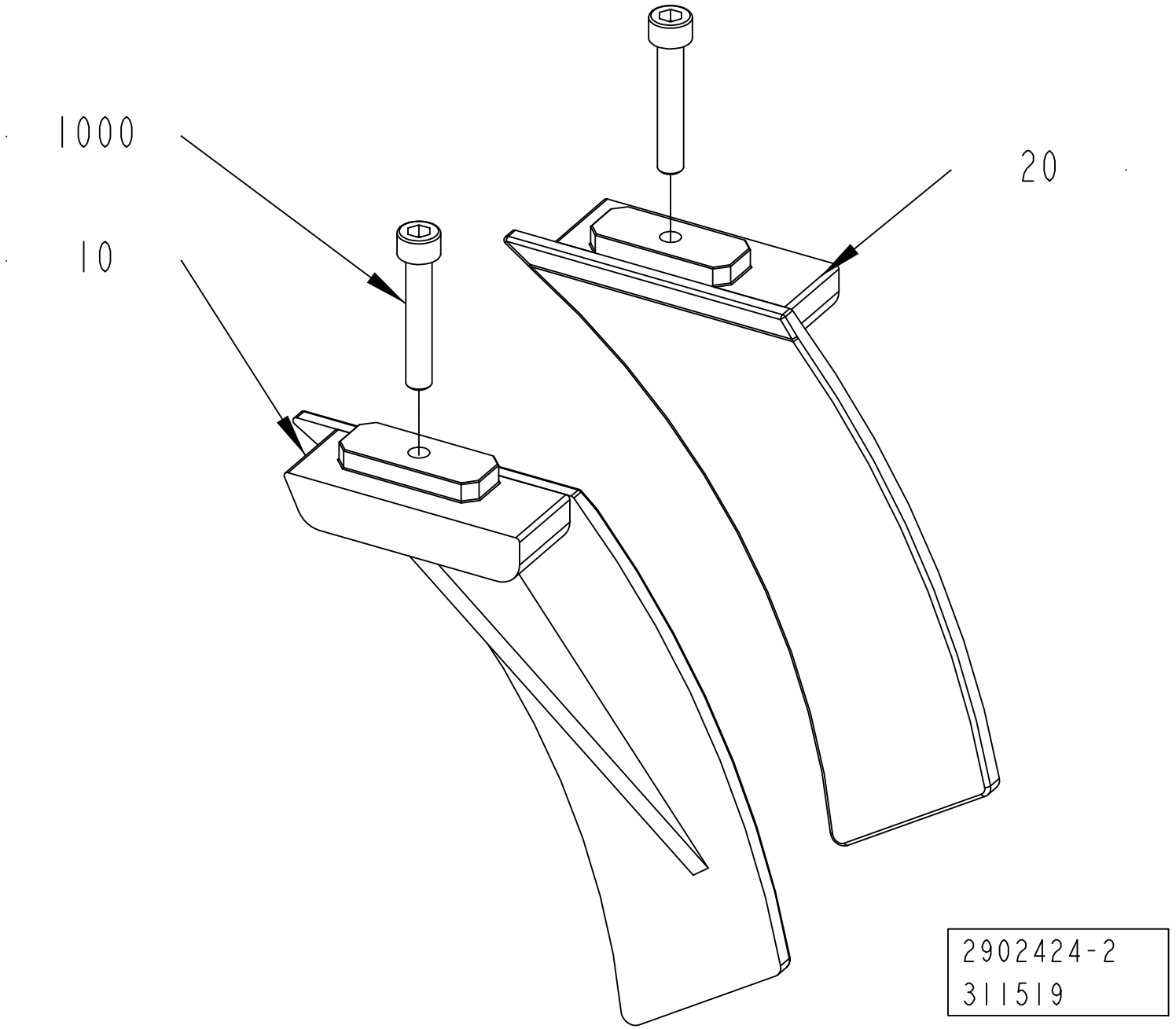
1000
10
20
2902424-2
311519

ECM: 383362 - 20090115
Group number: 2902424-0100
Assembly Drawing: 2902424-2_1_AA

This list covers pages from 6-46 to 6-49

Pos	Part No	UN	Qty	Description	Page No
TGA 0500SQ (See drawing on page: 6-48)					
010	2902440-0000		1	GUIDE	
020	2902441-0000		1	GUIDE	
TGA 0750SQ (See drawing on page: 6-48)					
010	2902438-0000		1	GUIDE	
020	2902439-0000		1	GUIDE	
TGA 1000SQ (See drawing on page: 6-46)					
010	2878080-0000		2	GUIDE	
Common Parts					
1000	312115-0374		2	SCREW ISO4762 M6X30 A4 80	

Pos	Part No	UN	Qty	Description	Page No

PRESSURE DEVICE

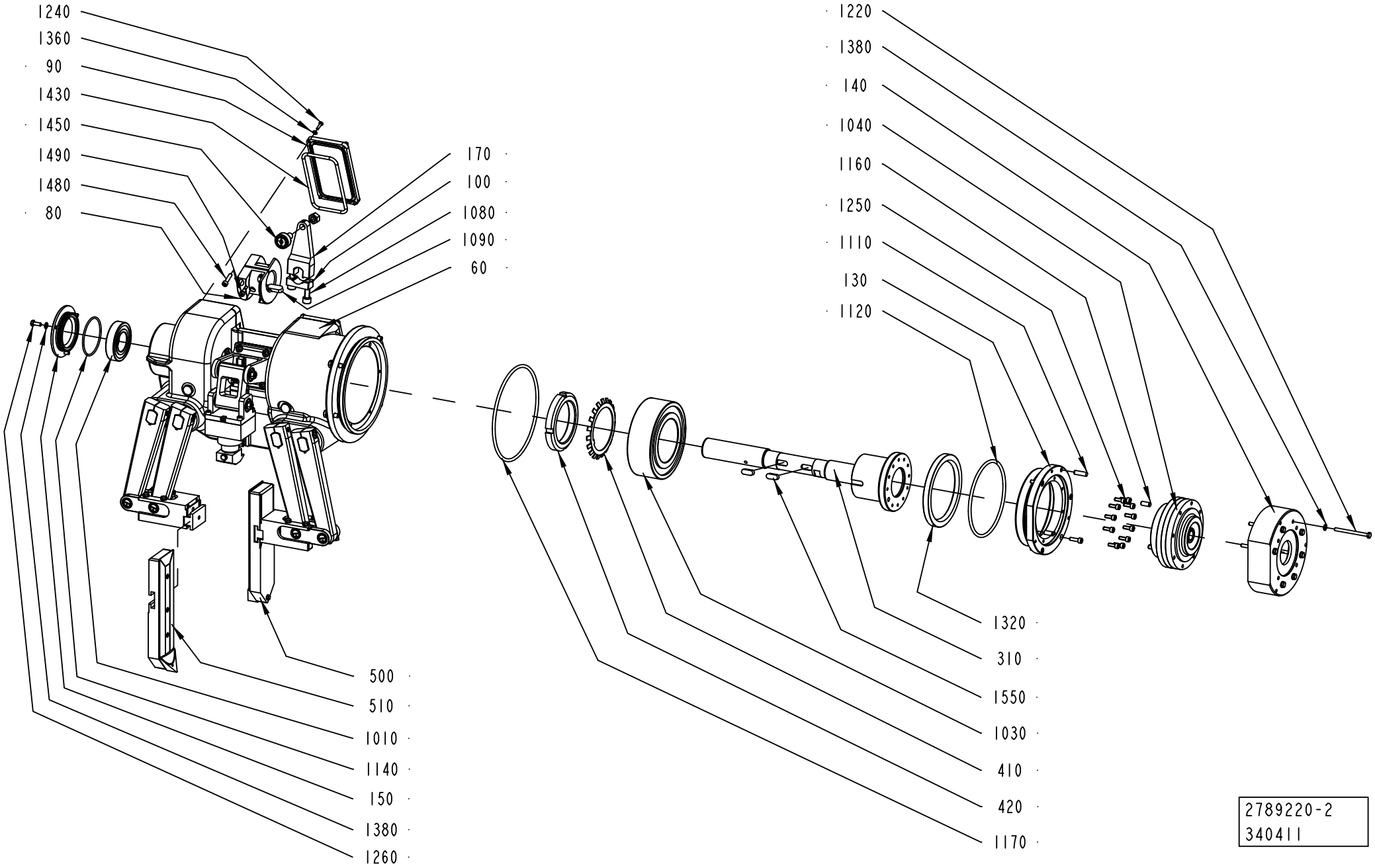

ECM: 397500 - 20090505
Group number: 2789220-0200
Assembly Drawing: 2789220-2_1_AB

This list covers pages from 6-50 to 6-53

Pos	Part No	UN	Qty	Description	Page No
-					
010	2807182-0000		2	CLAMP	
020	2902472-0000		4	WASHER	
040	2805201-0000		1	LEVER	
050	2805208-0000		4	PLUG	
060	2852122-0000		1	BOX	
070	2805193-0000		8	BUSHING	
080	2805174-0000		2	CAM	
090	2805183-0000		2	CAP	
100	2878117-0000		2	CLAMP	
1010	321313-0108		1	BALL BEARING, 40X80X18 MM	
1020	321133-0375		1	BUSHING, 35X39X30 MM	
1030	321330-0118		1	ANG. BALL BEAR, 90X160X52,4 MM	
1040	90600-0415		1	GEARS, PLANETARY FC-A25G-29	
1050	90287-0166		4	SCREW, SOCK.SET DOGPOINT M8X16	
1060	312605-0318		2	HEXAGON NUT, M6M M8 A280	
1070	90134-0058		5	CONNECTION	
1080	312115-0493		4	SCREW ISO4762 M10X25 A4 80	
1090	315701-0330		2	PARALLEL KEY W. ROUND ENDS 12X8X32 MM	
110	2805186-0000		1	CLAMP	
1100	312105-0331		2	SCREW M6S ISO 4017 M5X20 A480	
1110	311103-0404		1	PARALLEL PIN ISO 2338 8M6X28 A1	
1120	315202-0321		1	O-RING 149,3X5,7 MM	
1130	315202-0223		4	O-RING 39,2X3 MM	
1140	315202-0306		1	O-RING 74,5X3 MM	
1150	90165-0058		1	PIPE CLIP FOR TUBE D=2,5 MM	
1160	311103-0401		4	PARALLEL PIN ISO 2338 8M6X20 A1	
1170	315202-0329		1	O-RING 189,3X5,7 MM	
1180	315753-0121		4	RETAINING RING FOR BORE DIN 472 28 A2	
1190	315105-0146		2	WASHER BRB 5,3X10 RFR	
120	2789229-0000		1	FLANGE	
1200	312115-0287		1	SCREW ISO4762 M4X8 A4 80	
1210	312105-0453		4	SCREW M6S ISO 4017 M8X25 A480	
1220	90287-0312		7	SCREW M6S ISO 4014 M6X75 A480	
1230	312105-0491		4	SCREW M6S ISO 4017 M10X20 A480	
1240	312105-0293		8	SCREW M6S ISO 4017 M4X16 A470	
1250	312115-0368		11	SCREW ISO4762 M6X16 A4 80	
1260	312105-0368		3	SCREW M6S ISO 4017 M6X16 A480	
1270	312105-0370		1	SCREW M6S ISO 4017 M6X20 A480	
1280	312105-0291		6	SCREW M6S ISO 4017 M4X12 A470	
1290	312115-0370		8	SCREW ISO4762 M6X20 A4 80	
130	2789232-0000		1	FLANGE	
1300	312115-0451		4	SCREW ISO4762 M8X20 A4 80	
1320	90091-0058		1	RADIAL SEAL 120X150X12 MM	
1330	315221-0169		4	RADIAL SEAL 30X47X7 MM	
1340	315221-0183		2	RADIAL SEAL 40X52X7 MM	
1360	315106-0136		14	WASHER ISO 7089-4-200 HV A4	
1380	315105-0153		19	WASHER BRB 6,4X12 RFR	
1390	312115-0293		2	SCREW ISO4762 M4X16 A4 80	
140	2805185-0000		1	FLANGE	
1400	315105-0165		6	WASHER BRB 8,4X16 RFR	
1420	315202-0303		2	O-RING 59,5X3 MM	
1430	315202-0242		2	O-RING 124,3X5,7 MM	
1450	90600-0808		2	CAM ROLLER 12X30X40 MM, CFT 12 M UU N	
1460	90330-0026		2	PLUG, EXT. G-THREAD, G1/4	
1470	312109-0380		8	SCREW M6S ISO 4017 M6X50 A480	
1480	312115-0372		4	SCREW ISO4762 M6X25 A4 80	
1490	312180-0364		2	SCREW ISO7379 H6X10	
150	2805198-0000		1	CAP	
1520	90600-0412		1	CARRIAGE, SSR15XV1 QZ SS HH FMS	
1530	90214-0093		4	BALL BEARING, 12X28X8 MM	
1550	315705-0296		2	PARALLEL KEY W. ROUND ENDS 10X8X25 MM	
1560	311103-0348		2	PARALLEL PIN ISO 2338 6M6X10 A1	
1570	312115-0499		4	SCREW ISO4762 M10X40 A4 80	
1580	90296-0072	L	1	SHELL OMALA OIL 150, CAN 20 LITRES	
160	2902463-0000		4	LEVER	
170	2878116-0000		2	LEVER	
180	2805188-0000		1	LEVER	
190	2805209-0000		2	LOCK NUT	
200	2807157-0000		2	CAP	
210	2789230-0000		1	PUSHER	
230	2926878-0000		1	SUPPORT	
240	2878105-0000		4	SHAFT	
250	2902464-0000		2	SHAFT	
260	2902465-0000		2	SHAFT	
270	2805192-0000		2	SHAFT	
280	2789219-0000		4	SPACER	
290	2807183-0000		2	SCREW	
300	2807151-0000		8	BUSHING	
310	2889886-0000		1	SHAFT	
320	2807181-0000		2	SUPPORT	
330	2761928-0000		2	KNOB	
370	1498029-0000		1	PIN	
380	1260895-0000		1	SPRING	

Machine Type	Group Description	Used-In	Group Number	Page No

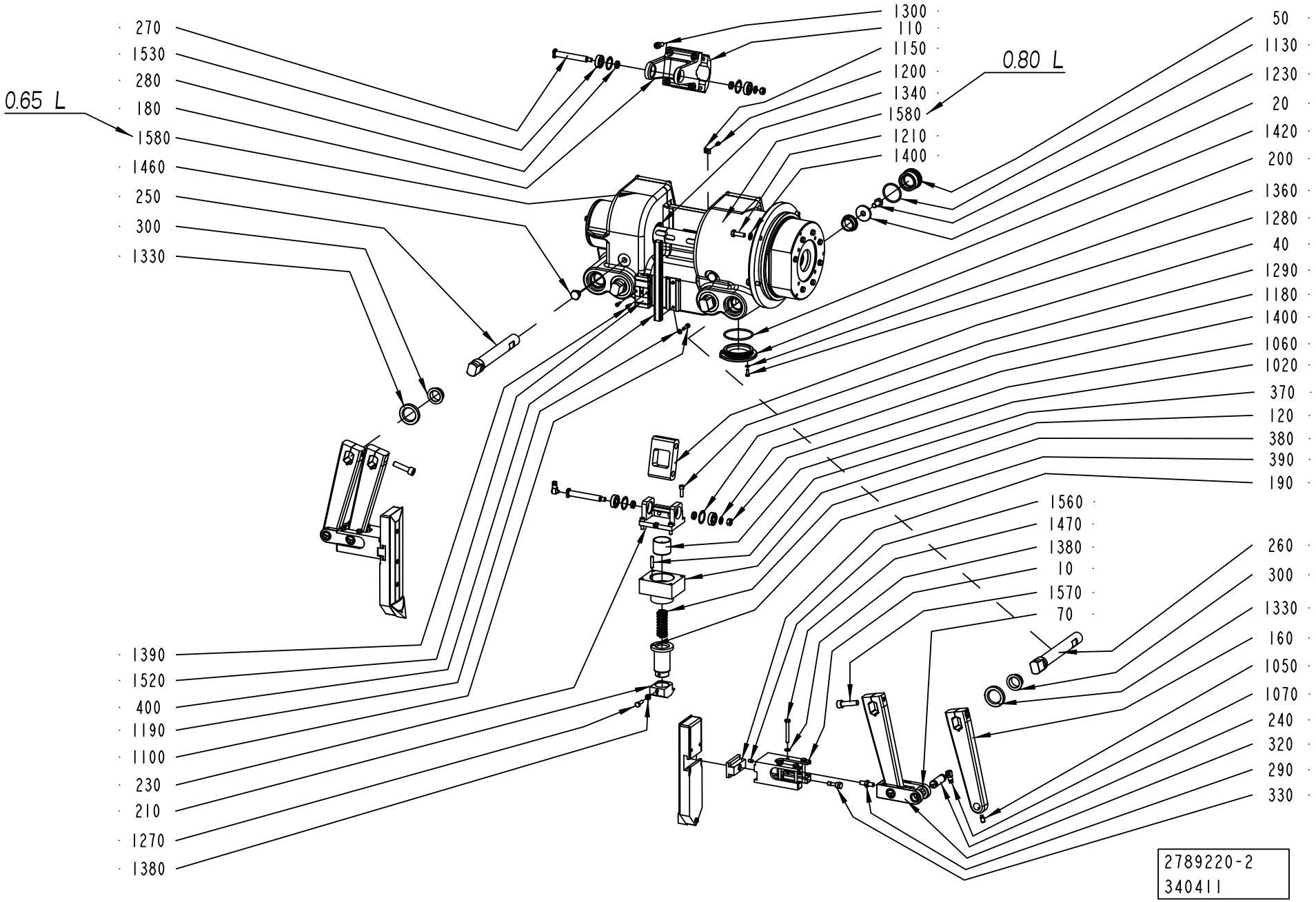
0.65 L
0.80 L
270
1530
280
180
1580
1460
250
300
1330
1390
1520
400
1190
1100
230
210
1270
1380
1300
110
1150
1200
1340
1580
1210
1400
50
1130
1230
20
1420
200
1360
1280
40
1290
1180
1400
1060
1020
370
120
380
390
190
1560
1470
1380
10
1570
70
260
300
1330
160
1050
1070
240
320
290
330
2789220-2
340411

ECM: 397500 - 20090505
Group number: 2789220-0200
Assembly Drawing: 2789220-2_2_AB

This list covers pages from 6-50 to 6-53

Pos	Part No	UN	Qty	Description	Page No
- (Cont'd)					
390	1478189-0000		1	SUPPORT	
400	2805199-0000		1	GUIDE	
410	2838219-0000		1	LOCK WASHER	
420	2838220-0000		1	ROUND NUT	
500	2826720-0200		1	FORMING PLATE	**6-55**
510	2838218-0200		1	FORMING PLATE	**6-57**

Pos	Part No	UN	Qty	Description	Page No

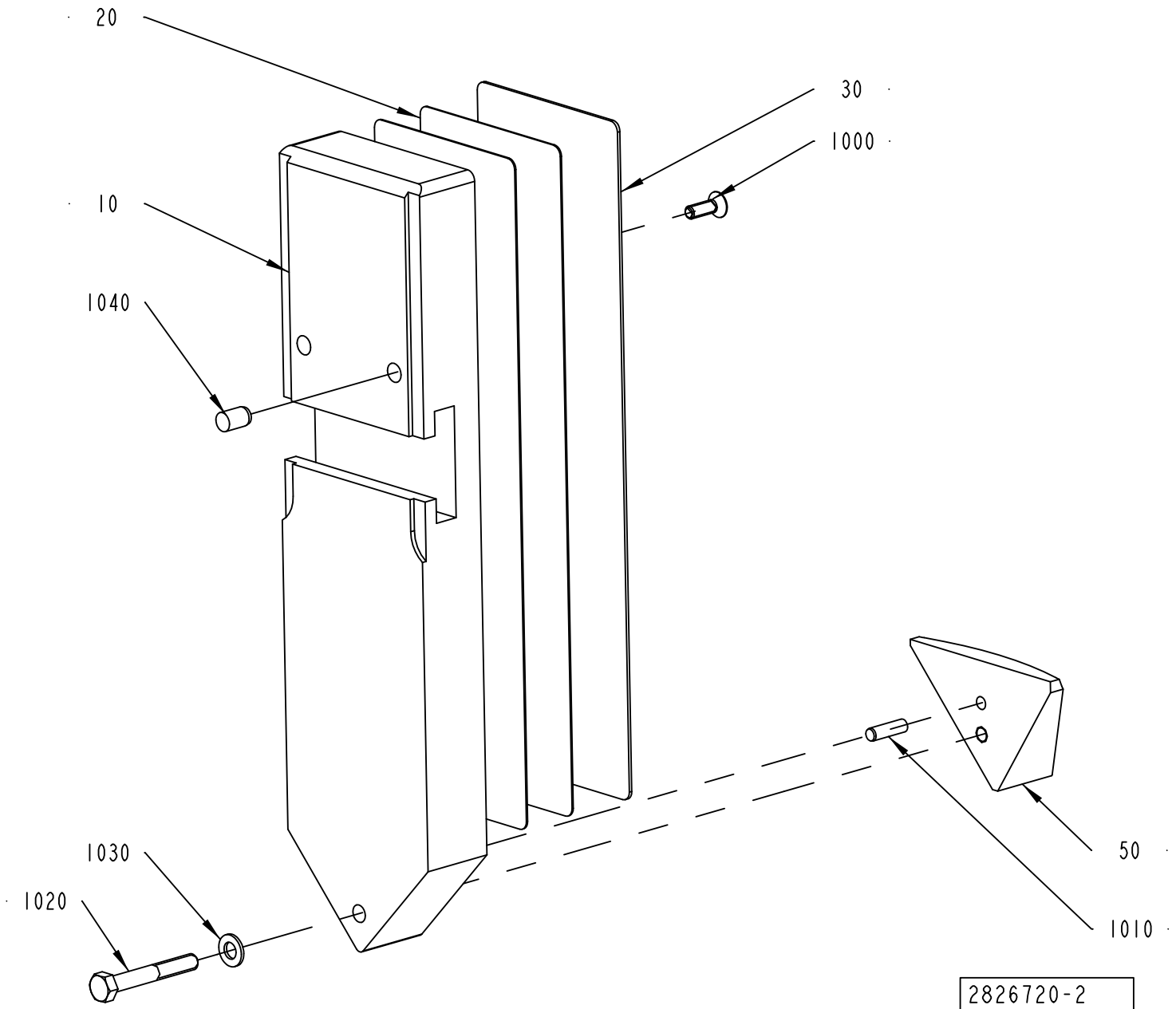
20
30
1000
10
1040
1030
1020
50
1010
2826720-2
311519

ECM: 343647 - 20080701
Group number: 2826720-0200
Assembly Drawing: 2826720-2_1_AA

Pos	Part No	UN	Qty	Description	Page No
TGA 0500SQ					
010	2838226-0000		1	PUSHER	
020	2838228-0000		6	SHIM	
030	2838229-0000		1	VOLUME BULGE	
050	2899242-0000		1	VOLUME BULGE	
1000	312155-0291		2	SCREW DIN 7991 MF6S M4X12 A4 70	
TGA 0750SQ					
010	2843901-0000		1	PUSHER	
020	2843903-0000		4	SHIM	
030	2843904-0000		1	VOLUME BULGE	
050	2899242-0000		1	VOLUME BULGE	
1000	312155-0291		2	SCREW DIN 7991 MF6S M4X12 A4 70	
TGA 1000SQ					
010	2789228-0000		1	PUSHER	
020	2680332-0000		2	SHIM	
030	2789183-0000		1	VOLUME BULGE	
050	2798289-0000		1	VOLUME BULGE	
1000	312155-0291		3	SCREW DIN 7991 MF6S M4X12 A4 70	
Common Parts					
1010	311103-0269		1	PARALLEL PIN ISO 2338 4M6X14 A1	
1020	312105-0337		1	SCREW M6S ISO 4014 M5X35 A480	
1030	315106-0146		1	WASHER ISO 7089-5-200 HV A4	
1040	311103-0348		1	PARALLEL PIN ISO 2338 6M6X10 A1	

Pos	Part No	UN	Qty	Description	Page No

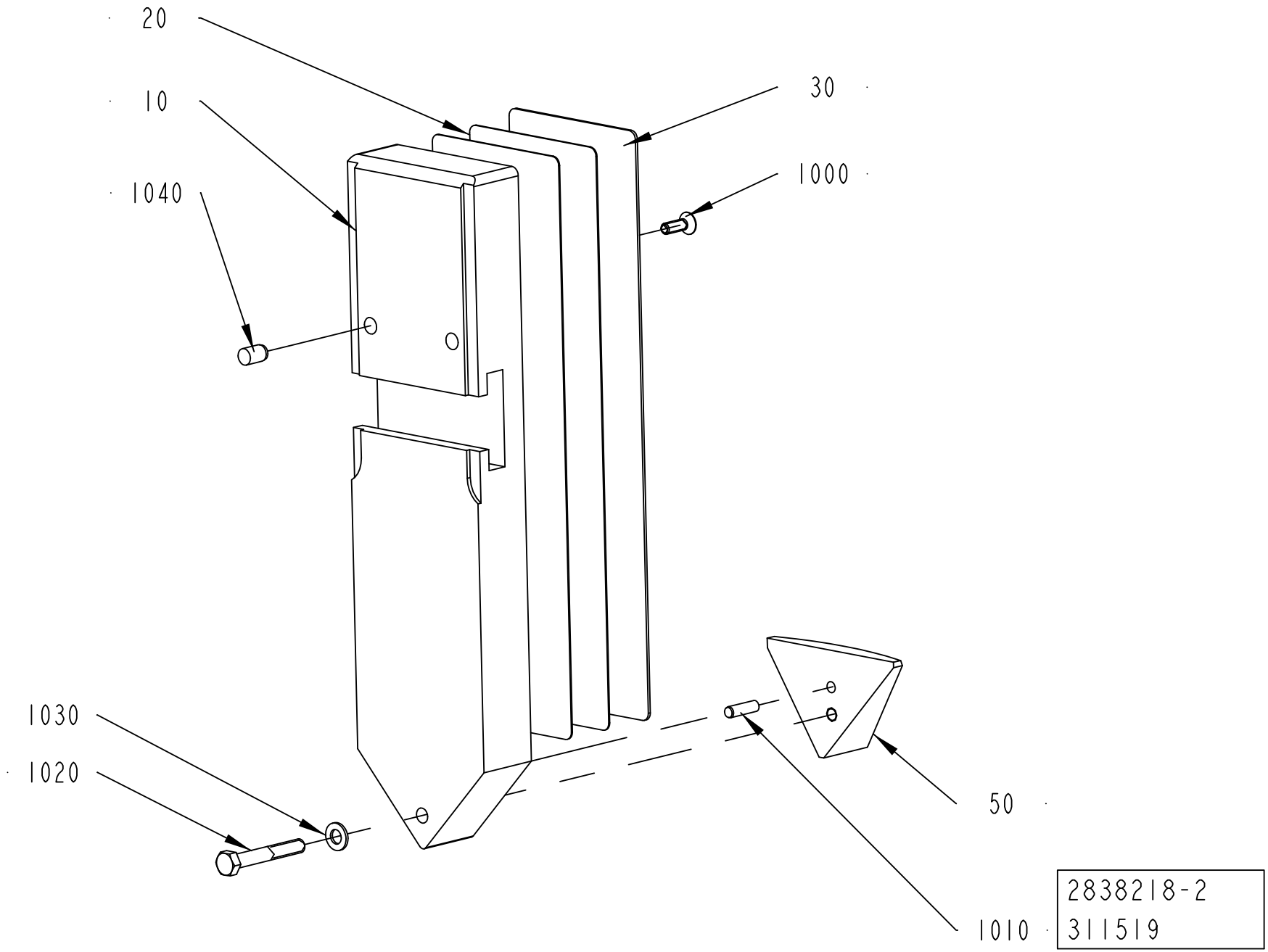
20
10
1040
30
1000
1030
1020
50
1010
2838218-2
311519

ECM: 343646 - 20080701
Group number: 2838218-0200
Assembly Drawing: 2838218-2_1_AA

Pos	Part No	UN	Qty	Description	Page No
TGA 0500SQ					
010	2838226-0000		1	PUSHER	
020	2838228-0000		6	SHIM	
030	2838229-0000		1	VOLUME BULGE	
050	2899240-0000		1	VOLUME BULGE	
1000	312155-0291		2	SCREW DIN 7991 MF6S M4X12 A4 70	
TGA 0750SQ					
010	2843901-0000		1	PUSHER	
020	2843903-0000		4	SHIM	
030	2843904-0000		1	VOLUME BULGE	
050	2899240-0000		1	VOLUME BULGE	
1000	312155-0291		2	SCREW DIN 7991 MF6S M4X12 A4 70	
TGA 1000SQ					
010	2789228-0000		1	PUSHER	
020	2680332-0000		2	SHIM	
030	2789183-0000		1	VOLUME BULGE	
050	2798288-0000		1	VOLUME BULGE	
1000	312155-0291		3	SCREW DIN 7991 MF6S M4X12 A4 70	
Common Parts					
1010	311103-0269		1	PARALLEL PIN ISO 2338 4M6X14 A1	
1020	312105-0337		1	SCREW M6S ISO 4014 M5X35 A480	
1030	315106-0146		1	WASHER ISO 7089-5-200 HV A4	
1040	311103-0348		1	PARALLEL PIN ISO 2338 6M6X10 A1	

Pos	Part No	UN	Qty	Description	Page No

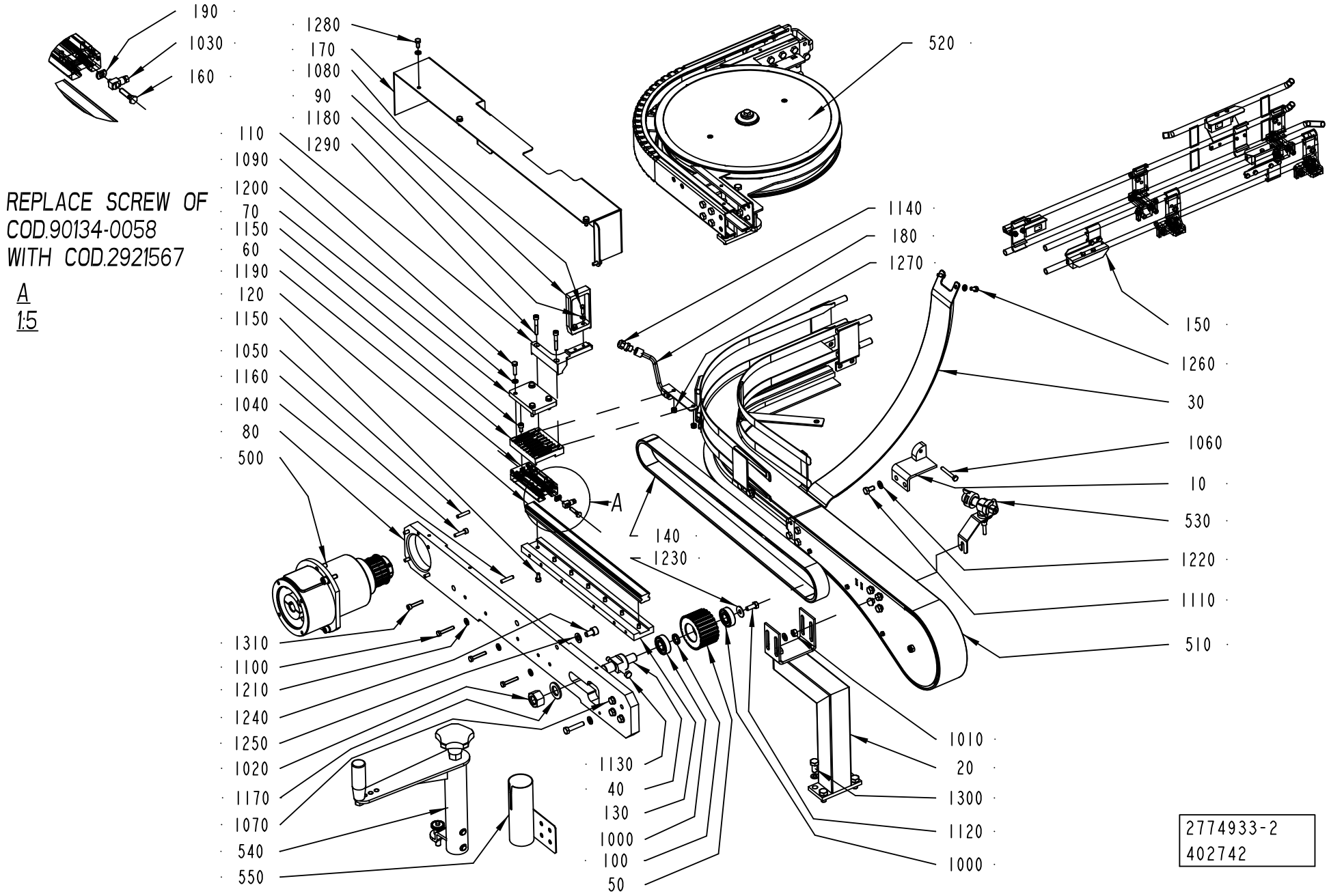
190
1030
160
1280
170
1080
90
1180
1290
110
1090
1200
70
1150
60
1190
120
1150
1050
1160
1040
80
500
520
1140
180
1270
150
1260
30
1060
10
530
1220
1110
510
A
140
1230
1310
1100
1210
1240
1250
1020
1170
1070
540
550
1130
40
130
1000
100
50
1010
20
1300
1120
1000
REPLACE SCREW OF
COD.90134-0058
WITH COD.2921567
A
1:5
2774933-2
402742

ECM: 402742 - 20090610
Group number: 2774933-0100
Assembly Drawing: 2774933-2_1_AD

Pos	Part No	UN	Qty	Description	Page No
-					
010	2774938-0000		1	GUIDE	
020	2774942-0000		1	SUPPORT	
030	2826705-0000		1	GUIDE	
040	2761965-0000		1	COLUMN	
050	2926822-0000		1	PULLEY	
060	2926877-0000		1	PLATE	
070	2926875-0000		1	PLATE	
080	2789209-0000		1	PLATE	
090	2774936-0000		1	PUSHER	
100	2761962-0000		1	SPACER	
1000	90214-0189		2	BALL BEARING, 17X40X12 MM	
1010	312605-0318		4	HEXAGON NUT, M6M M8 A280	
1020	312605-0326		1	HEXAGON NUT, M6M M20 A280	
1030	90134-0058		1	CONNECTION	
1040	311103-0357		3	PARALLEL PIN ISO 2338 6M6X30 A1	
1050	311103-0357		1	PARALLEL PIN ISO 2338 6M6X30 A1	
1060	312105-0379		1	SCREW M6S ISO 4014 M6X45 A480	
1070	312105-0459		4	SCREW M6S ISO 4014 M8X40 A480	
1080	312105-0329		2	SCREW M6S ISO 4017 M5X16 A480	
1090	312105-0372		4	SCREW M6S ISO 4017 M6X25 A480	
110	2774935-0000		1	SUPPORT	
1100	312109-0376		3	SCREW M6S ISO 4017 M6X35 A480	
1110	312105-0449		2	SCREW M6S ISO 4017 M8X16 A480	
1120	312105-0451		5	SCREW M6S ISO 4017 M8X20 A480	
1130	312109-0465		1	SCREW M6S ISO 4017 M8X70 A480	
1140	90458-0313		1	CABLE GLAND, M12X1,5, NO.5311 1100	
1150	312115-0366		11	SCREW ISO4762 M6X12 A4 80	
1160	312115-0372		4	SCREW ISO4762 M6X25 A4 80	
1170	315105-0192		1	WASHER BRB 21X36 RFR	
1180	315106-0146		2	WASHER ISO 7089-5-200 HV A4	
1190	90600-3595		1	CARRIAGE, SSR25XW1SSHHC1FME	
120	2774953-0000		1	RAIL	
1200	315105-0153		11	WASHER BRB 6,4X12 RFR	
1210	315105-0156		4	WASHER BRB 6,7X14 RFR	
1220	315105-0165		14	WASHER BRB 8,4X16 RFR	
1230	90005-0105		1	WASHER PLAIN ROUND 8,4(M8)/24, H=1,5	
1240	312115-0489		1	SCREW ISO4762 M10X16 A4 80	
1250	315106-0173		1	WASHER ISO 7089-10-200 HV A4	
1260	312105-0366		2	SCREW M6S ISO 4017 M6X12 A480	
1270	312812-0316		2	HEXAGON NUT, NY-LOCK M6 A480	
1280	312105-0367		4	SCREW M6S ISO 4017 M6X14 A480	
1290	312115-0378		2	SCREW ISO4762 M6X40 A4 80	
130	2789216-0000		1	PLATE	
1300	312105-0491		4	SCREW M6S ISO 4017 M10X20 A480	
1310	312115-0374		1	SCREW ISO4762 M6X30 A4 80	
140	2926846-0000		1	BELT	
150	1512339-0100		1	PHOTOCELL OUTFEED	**5-297, 5-299, 6-61, 6-63**
160	2921567-0000		1	SCREW	
170	2926863-0000		1	COVER	
180	2926870-0000		1	PIPE	
190	2951104-0000		1	SPACER	
500	2762008-0100		1	DRIVE	**6-13**
510	2789200-0100		1	END UNIT	**6-65**
520	2826722-0100		1	OUT FEED	**6-69**
530	2737340-0100		1	SPRAYING STATION	**6-73**
540	2902490-0100		1	TOOL	**6-75**
550	2902501-0000		1	SUPPORT	

Machine Type	Group Description	Used-In	Group Number	Page No

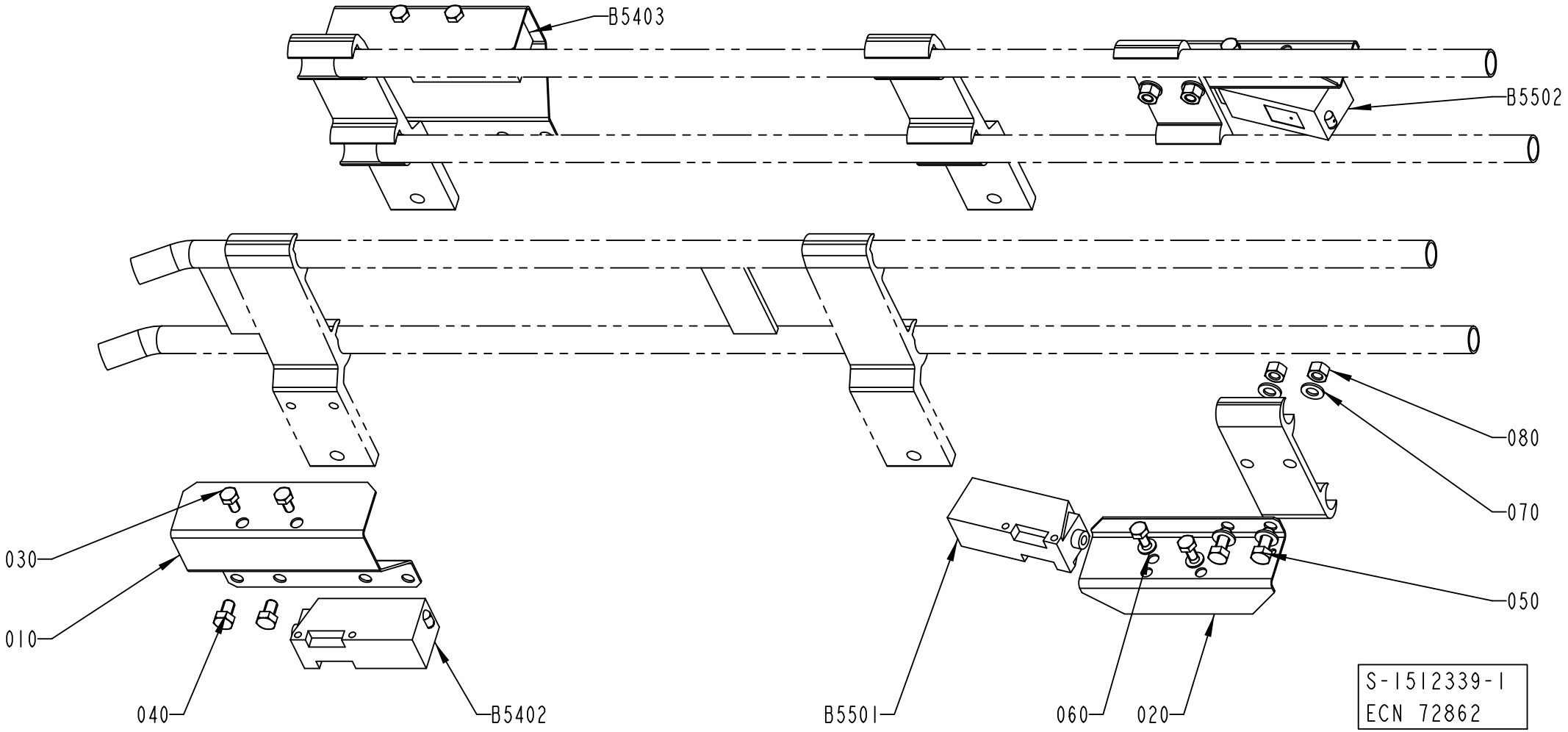
B5403
B5502
080
070
050
030
010
040
B5402
B5501
060
020
S-1512339-1
ECN 72862

Pos	Part No	UN	Qty	Description	Page No
A3/FLEX TBA 1890S, A3/FLEX TBA 2000S, A3/FLEX TBA 1400B, A3/FLEX TGA 1000SQ, A3/FLEX TGA 0500SQ, A3/FLEX TGA 0750SQ (See drawing on pages: 5-298, 6-62)					
010	1285010-0000		2	HOLDER	
020	1086889-0000		2	COVER	
025	1020637-0000		4	HOLDER	
A3/FLEX TBA 0500B, A3/FLEX TBA 1000B, A3/FLEX TBA 1000S, A3/FLEX TBA 1000SQ, A3/FLEX TPA 1000SQ, A3/FLEX TBA 0200S, A3/FLEX TBA 1500S, A3/FLEX TBA 0200B, A3/FLEX TBA 0250B, A3/FLEX TBA 0330S, A3/FLEX TPA 0330SQ, A3/FLEX TPA 0500SQ, A3/FLEX TBA 0200M, A3/FLEX TBA 0250S, A3/FLEX TBA 0500S, A3/FLEX TPA 0250SQ, A3/FLEX TPA 0200SQ, A3/FLEX TPA 0750SQ, A3/FLEX TBA 0200SQ, A3/FLEX TBA 0250SQ, A3/FLEX TBA 0500SQ (See drawing on pages: 5-296, 6-60)					
010	1285010-0000		2	HOLDER	
020	1086889-0000		2	COVER	
025	1020637-0000		2	HOLDER	
Common Parts					
030	312105-0287		8	SCREW M6S ISO 4017 M4X8 A470	
040	312105-0323		4	SCREW M6S ISO 4017 M5X8 A480	
050	312105-0327		4	SCREW M6S ISO 4017 M5X12 A480	
060	315105-0136		4	WASHER BRB 4,3X8 RFR	
070	315105-0146		16	WASHER BRB 5,3X10 RFR	
080	312605-0314		4	HEXAGON NUT, M6M M5 A280	
B5402	90232-0104		1	PH.CELL E3S-CT61-D-5M	
B5403	90232-0103		1	PH.CELL E3S-CT61-L-5M	
B5501	90232-0104		1	PH.CELL E3S-CT61-D-5M	
B5502	90232-0103		1	PH.CELL E3S-CT61-L-5M	

Pos	Part No	UN	Qty	Description	Page No

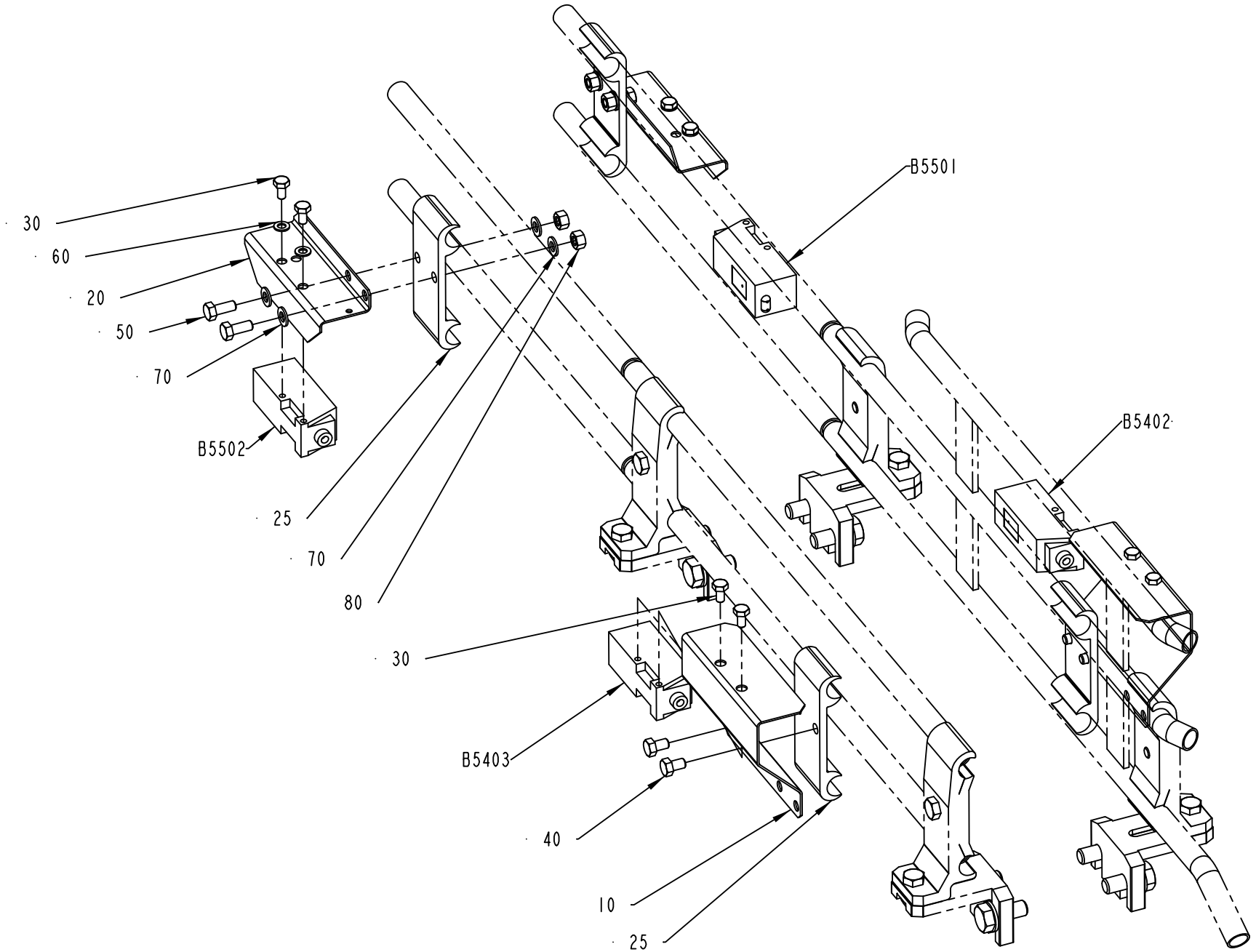

1512339-3
193145

Pos	Part No	UN	Qty	Description	Page No
A3/FLEX TBA 1890S, A3/FLEX TBA 2000S, A3/FLEX TBA 1400B, A3/FLEX TGA 1000SQ, A3/FLEX TGA 0500SQ, A3/FLEX TGA 0750SQ (See drawing on pages: 5-298, 6-62)					
010	1285010-0000		2	HOLDER	
020	1086889-0000		2	COVER	
025	1020637-0000		4	HOLDER	
A3/FLEX TBA 0500B, A3/FLEX TBA 1000B, A3/FLEX TBA 1000S, A3/FLEX TBA 1000SQ, A3/FLEX TPA 1000SQ, A3/FLEX TBA 0200S, A3/FLEX TBA 1500S, A3/FLEX TBA 0200B, A3/FLEX TBA 0250B, A3/FLEX TBA 0330S, A3/FLEX TPA 0330SQ, A3/FLEX TPA 0500SQ, A3/FLEX TBA 0200M, A3/FLEX TBA 0250S, A3/FLEX TBA 0500S, A3/FLEX TPA 0250SQ, A3/FLEX TPA 0200SQ, A3/FLEX TPA 0750SQ, A3/FLEX TBA 0200SQ, A3/FLEX TBA 0250SQ, A3/FLEX TBA 0500SQ (See drawing on pages: 5-296, 6-60)					
010	1285010-0000		2	HOLDER	
020	1086889-0000		2	COVER	
025	1020637-0000		2	HOLDER	
Common Parts					
030	312105-0287		8	SCREW M6S ISO 4017 M4X8 A470	
040	312105-0323		4	SCREW M6S ISO 4017 M5X8 A480	
050	312105-0327		4	SCREW M6S ISO 4017 M5X12 A480	
060	315105-0136		4	WASHER BRB 4,3X8 RFR	
070	315105-0146		16	WASHER BRB 5,3X10 RFR	
080	312605-0314		4	HEXAGON NUT, M6M M5 A280	
B5402	90232-0104		1	PH.CELL E3S-CT61-D-5M	
B5403	90232-0103		1	PH.CELL E3S-CT61-L-5M	
B5501	90232-0104		1	PH.CELL E3S-CT61-D-5M	
B5502	90232-0103		1	PH.CELL E3S-CT61-L-5M	

Pos	Part No	UN	Qty	Description	Page No

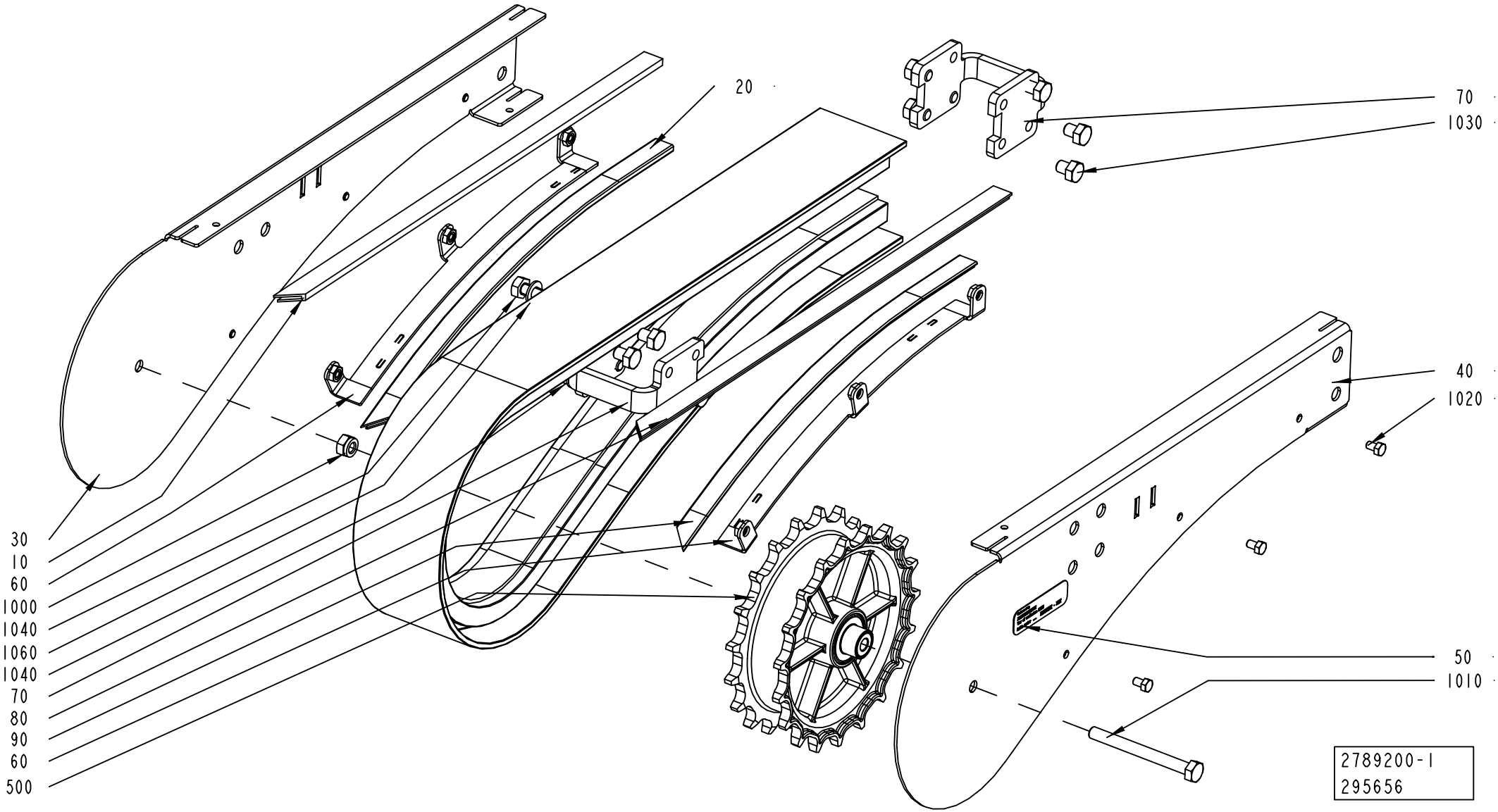
20
70
1030
40
1020
50
1010
30
10
60
1000
1040
1060
1040
70
80
90
60
500
2789200-1
295656

ECM: 369818 - 20090101
Group number: 2789200-0100
Assembly Drawing: 2789200-1_1_AB

Pos	Part No	UN	Qty	Description	Page No
-					
010	1550595-4153		1	SLIDING STRIP	
020	2589960-3353		1	SLIDING STRIP	
030	2656686-0000		1	SIDE PLATE	
040	2656687-0000		1	SIDE PLATE	
050	1086870-0000		1	SIGN	
060	2656407-0000		2	SLIDE RAIL	
070	2561206-0000		2	SPACER	
080	1550595-4154		1	SLIDING STRIP	
090	2589960-3354		1	SLIDING STRIP	
100	2561244-0200		1	DRIVE WHEEL	**5-257, 6-67**
1000	312812-0318		1	HEXAGON NUT, NY-LOCK M8 A480	
1010	312105-0467		1	SCREW M6S ISO 4014 M8X80 A480	
1020	312105-0323		6	SCREW M6S ISO 4017 M5X8 A480	
1030	90459-4735		9	SCREW M6S ISO 4017 M8X10 A480	
1040	312105-0449		4	SCREW M6S ISO 4017 M8X16 A480	
1060	315105-0165		4	WASHER BRB 8,4X16 RFR	

Pos	Part No	UN	Qty	Description	Page No

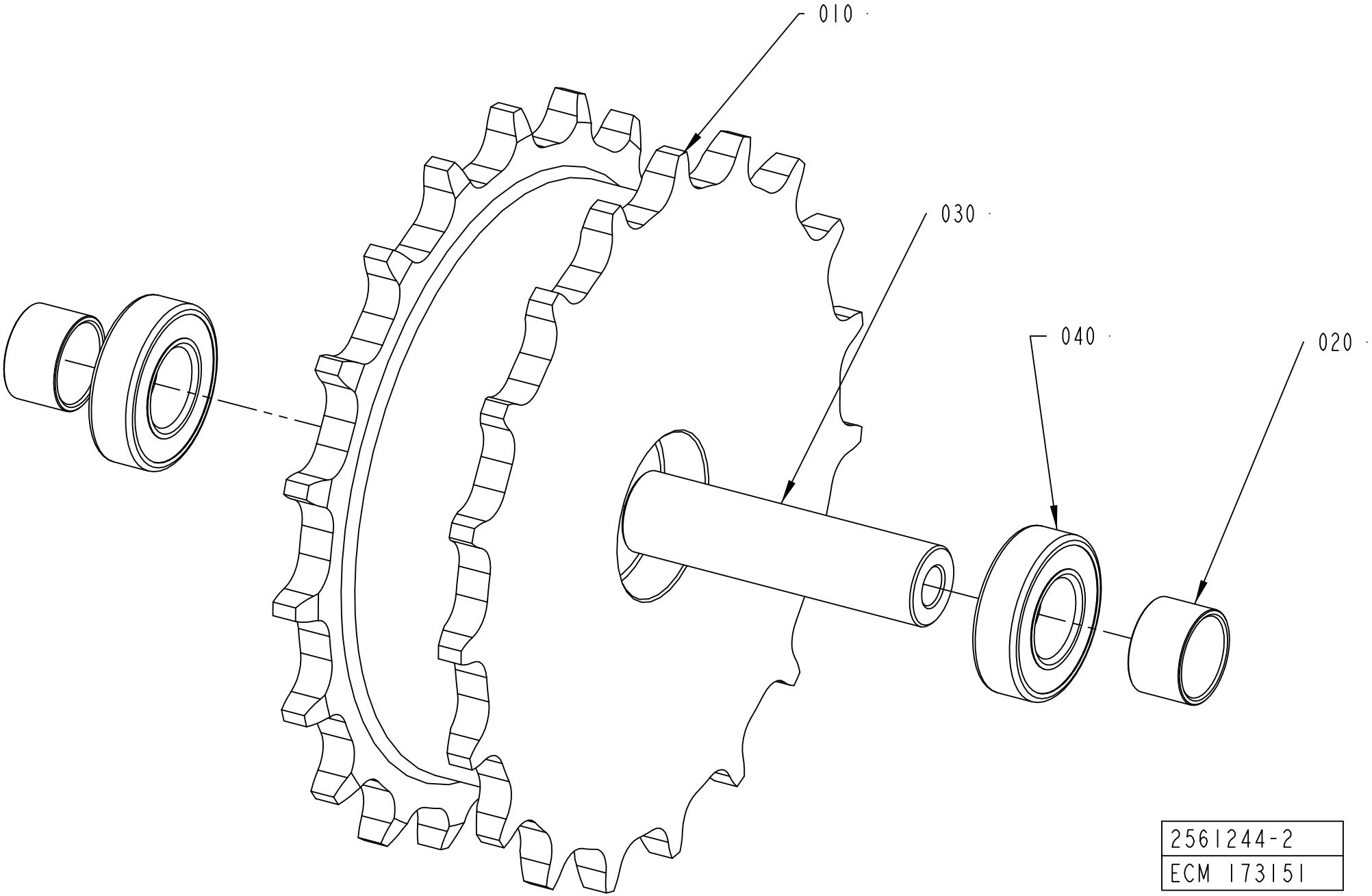
010
030
040
020
2561244-2
ECM 173151

ECM: 306227 - 20070817
Group number: 2561244-0200
Assembly Drawing: 2561244-2_1_AA

Pos	Part No	UN	Qty	Description	Page No
-					
010	2656672-0000		1	SPROCKET	
020	2656673-0000		2	SPACER	
030	2561267-0000		1	SHAFT	
040	1550348-0001		2	BEARING	

Pos	Part No	UN	Qty	Description	Page No

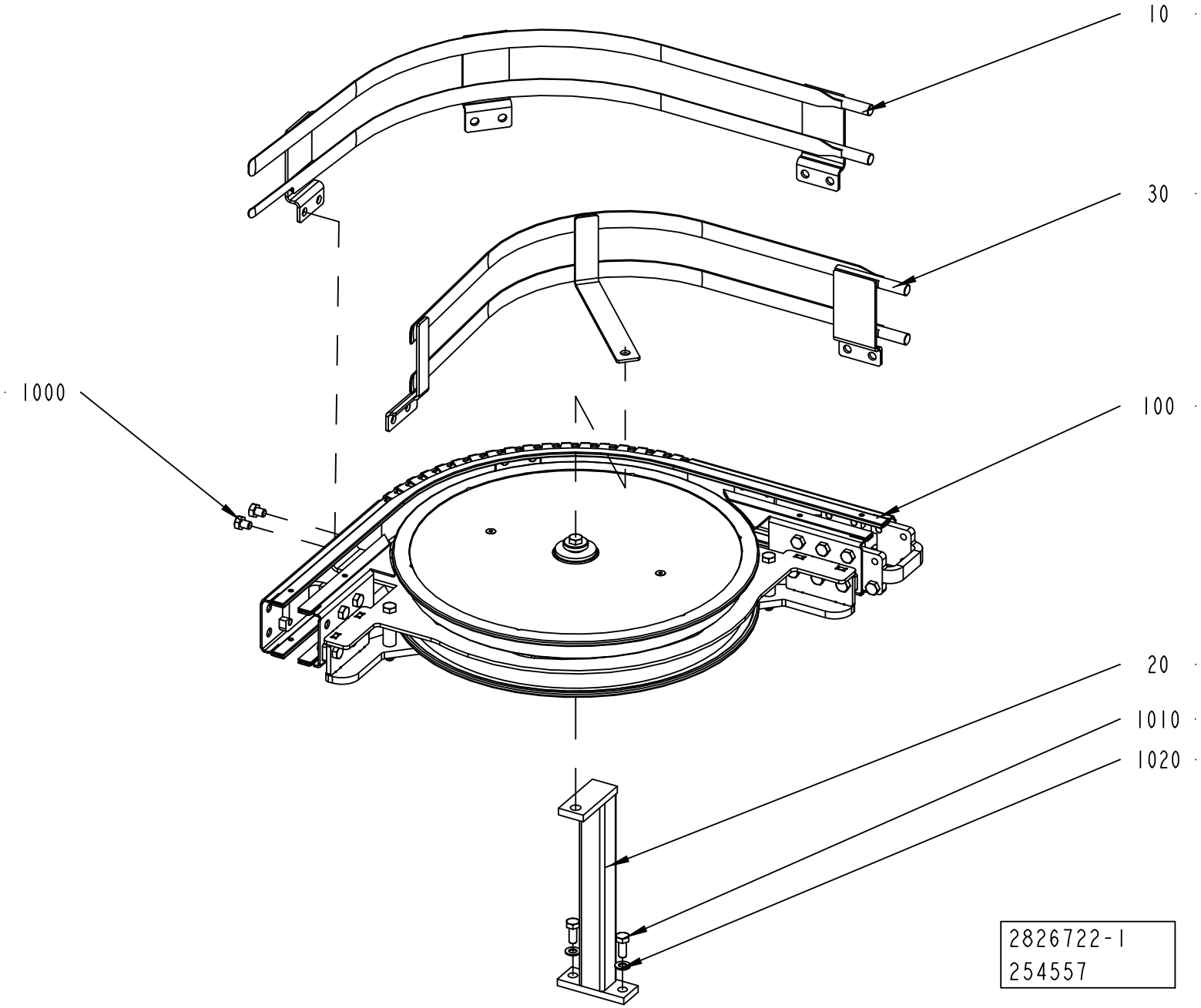
10
30
1000
100
20
1010
1020
2826722-1
254557

ECM: 369822 - 20090101
Group number: 2826722-0100
Assembly Drawing: 2826722-1_1_AA

Pos	Part No	UN	Qty	Description	Page No
-					
010	2838235-0000		1	GUIDE	
020	2807186-0000		1	SUPPORT	
030	2789215-0000		1	ARCH	
100	1550698-0200		1	WHEEL CURVE 90 DEGREES	**6-71**
1010	312105-0451		2	SCREW M6S ISO 4017 M8X20 A480	
1020	315105-0165		2	WASHER BRB 8,4X16 RFR	

Pos	Part No	UN	Qty	Description	Page No

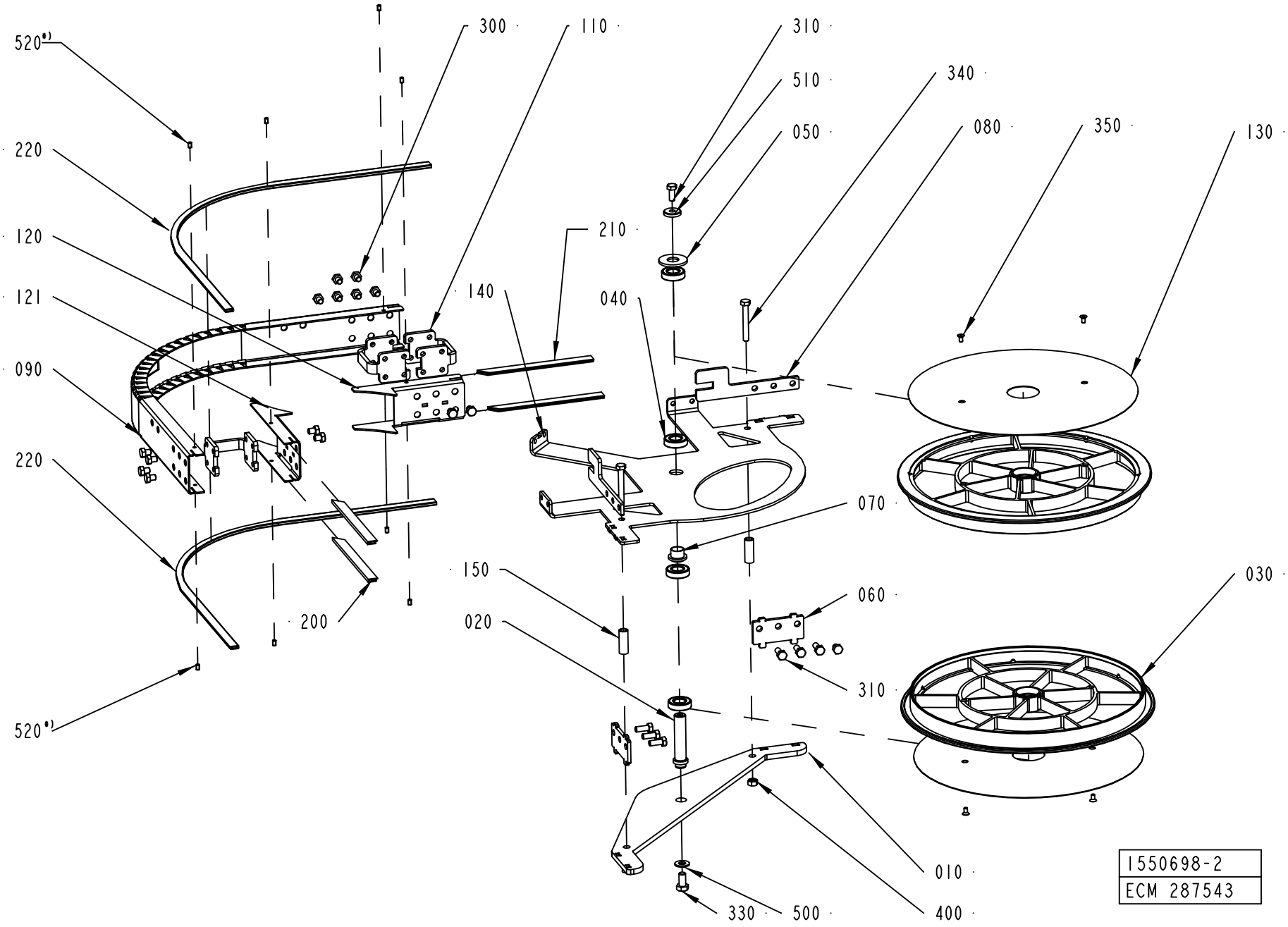
520*)
220
120
121
090
220
520*)
300
110
310
510
050
340
080
350
130
210
140
040
070
150
020
200
060
310
030
010
400
330
500
1550698-2
ECM 287543

ECM: 383372 - 20090115
Group number: 1550698-0200
Assembly Drawing: 1550698-2_1_AF

Pos	Part No	UN	Qty	Description	Page No
-					
010	1550667-0000		1	BOTTOM PANEL	
020	1550689-0000		1	SHAFT	
030	2656655-0000		2	WHEEL	
040	1550348-0001		4	BEARING	
050	1550693-0000		1	WASHER	
060	2561257-0000		2	SPACER	
070	1550690-0000		1	SLEEVE	
080	2561603-0000		2	SPACER	
090	1550669-0000		1	SIDE PLATE	
110	2561206-0000		3	SPACER	
120	1550687-0001		1	SIDE PLATE	
121	1550687-0002		1	SIDE PLATE	
130	2561232-0000		2	COVER	
140	1550668-0000		1	BRACKET	
150	1550626-0005		2	SPACER	
200	1550595-1801		2	SLIDING STRIP	
210	1550595-1802		2	SLIDING STRIP	
220	2699584-0830		2	SLIDING STRIP	
300	90459-4735		15	SCREW M6S ISO 4017 M8X10 A480	
310	312105-0451		7	SCREW M6S ISO 4017 M8X20 A480	
330	312105-0491		1	SCREW M6S ISO 4017 M10X20 A480	
340	312105-0463		2	SCREW M6S ISO 4014 M8X60 A480	
350	312155-0325		4	SCREW DIN 7991 MF6S M5X10 A4 70	
400	312605-0318		2	HEXAGON NUT, M6M M8 A280	
500	315105-0173		1	WASHER BRB 10,5X22 RFR	
510	315125-0165		1	WASHER TBRSB 8,4X26X5 A4	
520	90459-7293		8	SET SCREW DIN 551M5X8 PA66	

Pos	Part No	UN	Qty	Description	Page No

Machine Type | Group Description | Used-In | Group Number | Page No

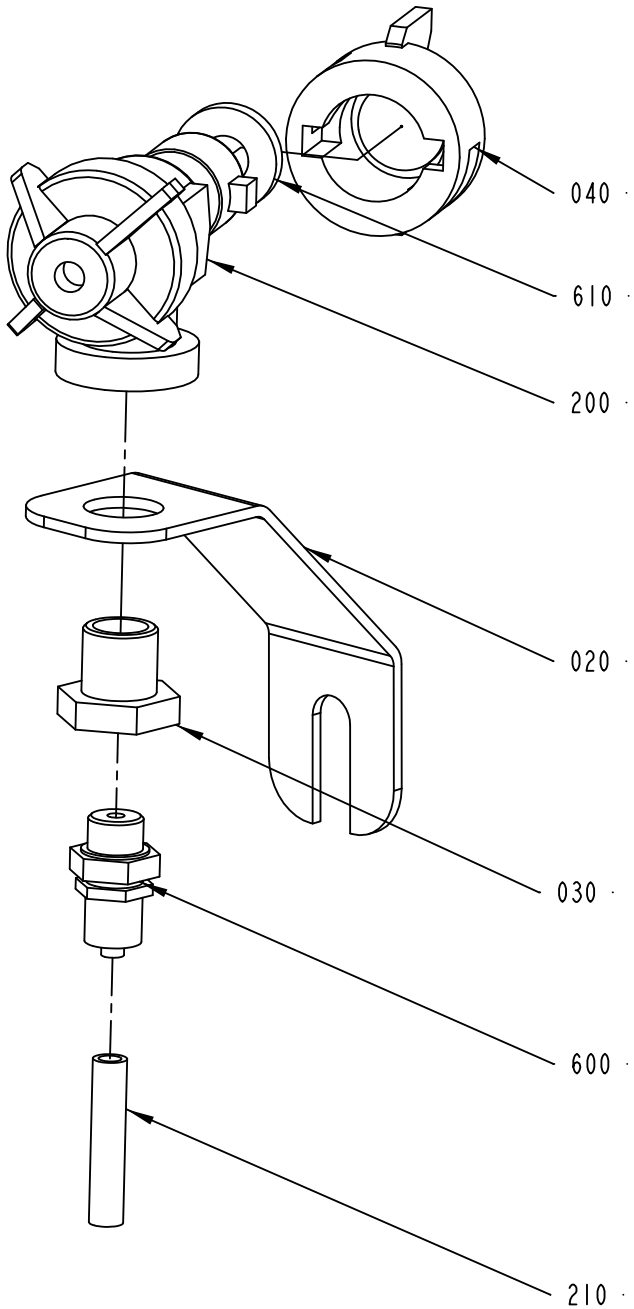

2737340-1
257694

ECM: 259947 - 20061212
Group number: 2737340-0100
Assembly Drawing: 2737340-1_1_AB

Pos	Part No	UN	Qty	Description	Page No
-					
020	2750776-0000		1	BRACKET	
030	532413-0000		1	REDUCING NIPPLE	
040	534310-0001		1	NOZZLE	
200	90230-0027		1	NON-RETURN VALVE QJ 8355-1/4"	
	90230-0301		*1*	*DIAPHRAGM*	
	90230-0300		*1*	*STRAINER*	
210	90166-0266	MM	1700	TUBE 6 MM PA BLACK	
600	342921-0113		1	STRAIGHT COUPLING,EXT.THREADED 6/4-G1/8"	
610	90005-0094		1	GASKET C 19438-EPR	

Pos	Part No	UN	Qty	Description	Page No

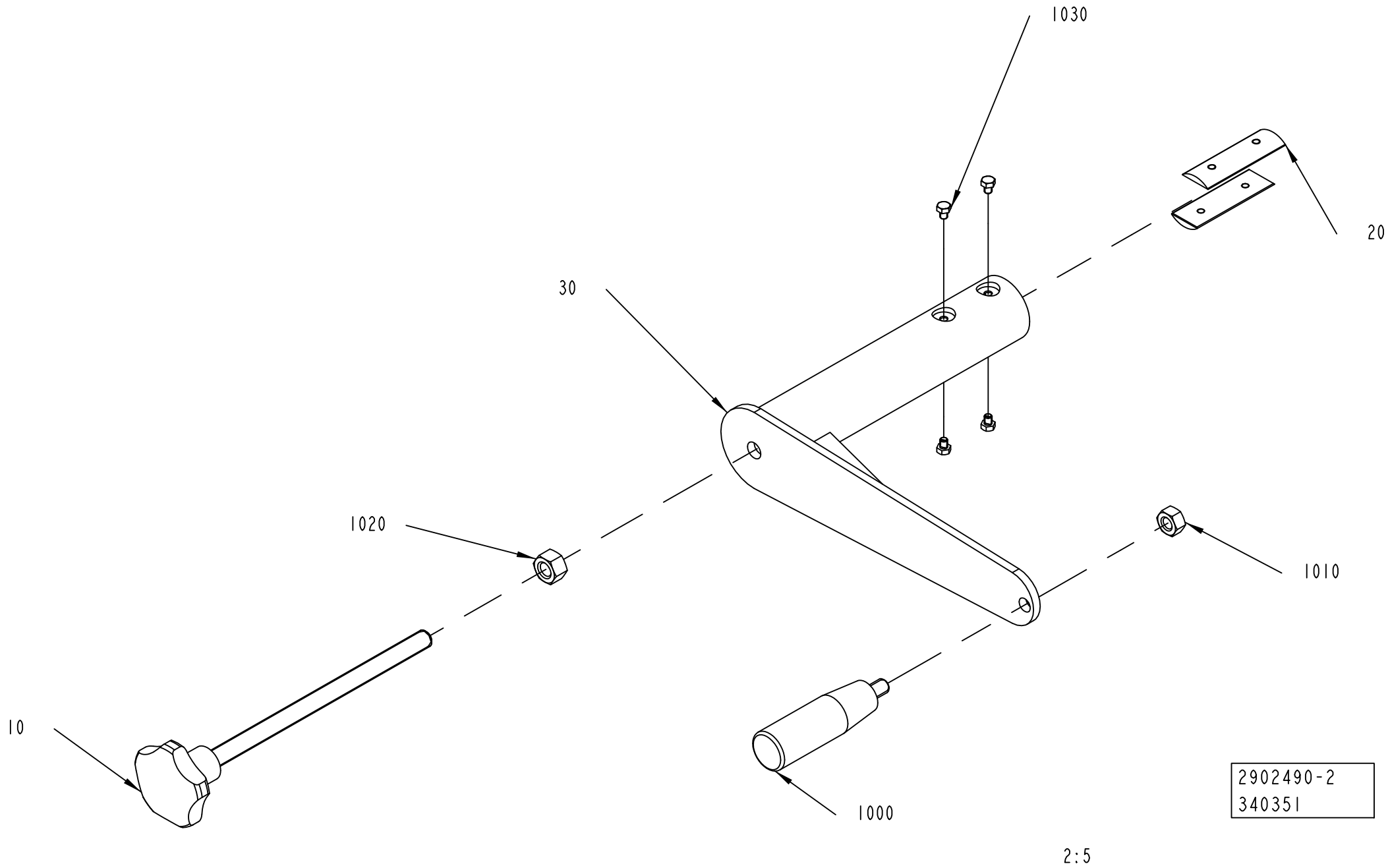
1030
20
30
1020
1010
10
1000
2902490-2
340351
2:5

ECM: 342210 - 20080327
Group number: 2902490-0100
Assembly Drawing: 2902490-2_1_AA

Pos	Part No	UN	Qty	Description	Page No
-					
010	2961981-0000		1	HANDLE	
020	2902491-0000		2	PLATE	
030	2902489-0000		1	TOOL	
1000	90051-0127		1	HANDLE, NO. .601/90+X-M10-INOX	
1010	312605-0320		1	HEXAGON NUT, M6M M10 A280	
1020	312605-0322		1	HEXAGON NUT, M6M M12 A280	
1030	90287-0199		4	SCREW M6S ISO 4017 M5X6 A480	

Pos	Part No	UN	Qty	Description	Page No

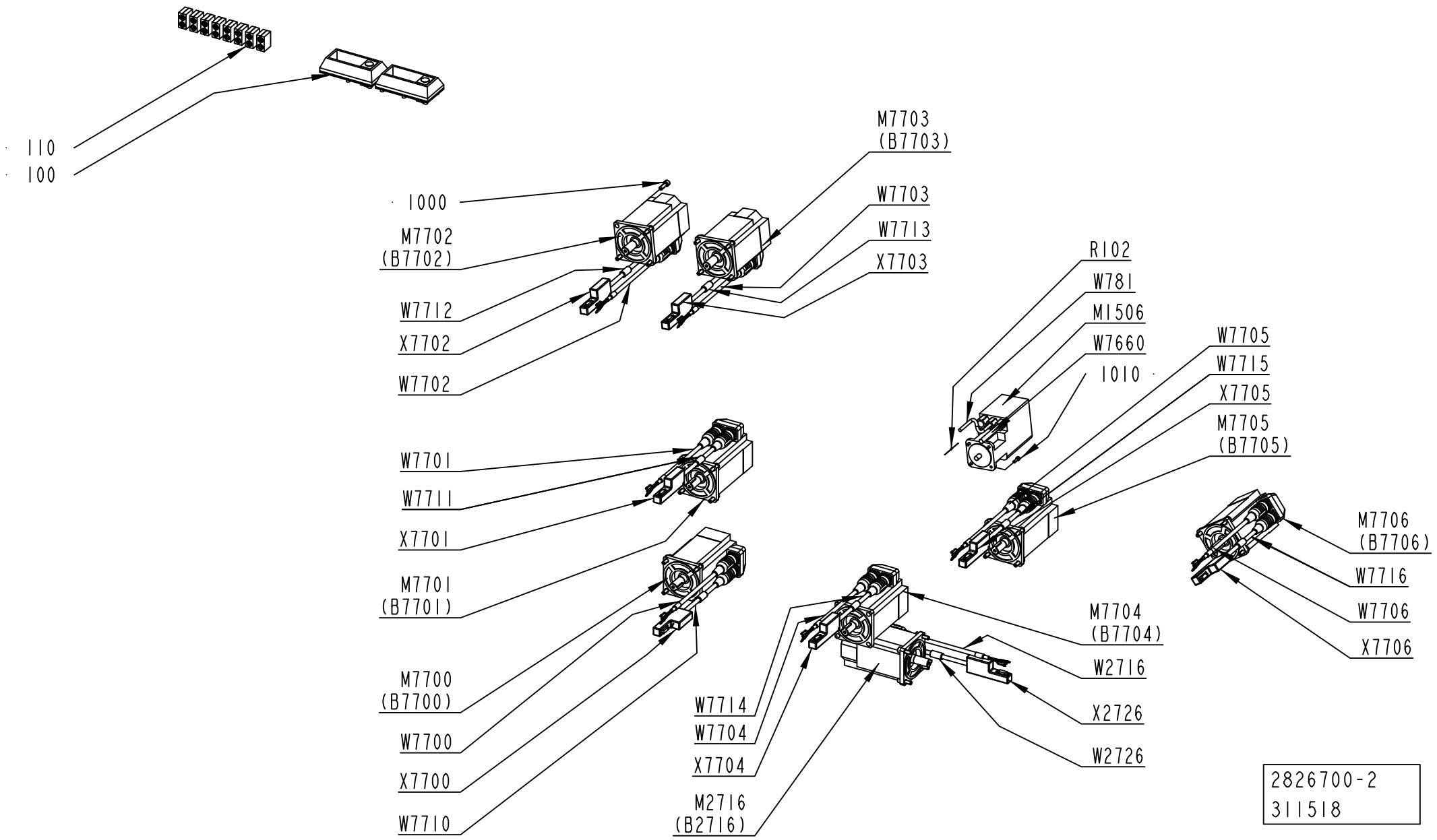
110
100
1000
M7702
(B7702)
W7712
X7702
W7702
M7703
(B7703)
W7703
W7713
X7703
R102
W781
M1506
W7660
1010
W7705
W7715
X7705
M7705
(B7705)
M7706
(B7706)
W7716
W7706
X7706
W7701
W7711
X7701
M7701
(B7701)
M7700
(B7700)
W7700
X7700
W7710
M7704
(B7704)
W2716
X2726
W2726
W7714
W7704
X7704
M2716
(B2716)
2826700-2
311518

ECM: 319148 - 20080101
Group number: 2826700-0200
Assembly Drawing: 2826700-2_1_AA

Pos	Part No	UN	Qty	Description	Page No
-					
100	90458-1178		2	FRAME CF 8	
1000	312115-0453		28	SCREW ISO4762 M8X25 A4 80	
1010	312115-0329		4	SCREW ISO4762 M5X16 A4 80	
110	90458-1174		8	MULTI DIAMETER MODULE, CM 20W40	
M1506	90459-7195		1	STEPPER MOTOR HRA71-DLB04075	
M7700	90600-0753		1	SERVO MOTOR MPL-B430P-MJ22AA	
M7701	90600-0753		1	SERVO MOTOR MPL-B430P-MJ22AA	
M7702	90600-0753		1	SERVO MOTOR MPL-B430P-MJ22AA	
M7703	90600-0753		1	SERVO MOTOR MPL-B430P-MJ22AA	
M7704	90600-0753		1	SERVO MOTOR MPL-B430P-MJ22AA	
M7705	90600-0753		1	SERVO MOTOR MPL-B430P-MJ22AA	
M7706	90600-0753		1	SERVO MOTOR MPL-B430P-MJ22AA	
M7707	90600-0753		1	SERVO MOTOR MPL-B430P-MJ22AA	
R102	90459-1297		1	RESISTANCE FIXED, 120 OHM, 0,25 W	
W2716	90459-2566		1	MOTOR CABLE 16 AWG 2090-XXNPMP-16S15	
W2726	90600-3189		1	MOTOR FEEDBACK CABLE 2090-XXNFMP-S12/C	
W7660	90220-0096	M	5	SCR. CABLE 3X1,5MM2	
W7700	90459-2566		1	MOTOR CABLE 16 AWG 2090-XXNPMP-16S15	
W7701	90459-2566		1	MOTOR CABLE 16 AWG 2090-XXNPMP-16S15	
W7702	90459-2566		1	MOTOR CABLE 16 AWG 2090-XXNPMP-16S15	
W7703	90459-2566		1	MOTOR CABLE 16 AWG 2090-XXNPMP-16S15	
W7704	90459-2566		1	MOTOR CABLE 16 AWG 2090-XXNPMP-16S15	
W7705	90459-2566		1	MOTOR CABLE 16 AWG 2090-XXNPMP-16S15	
W7706	90459-2566		1	MOTOR CABLE 16 AWG 2090-XXNPMP-16S15	
W7710	90459-7207		1	MOTOR FEEDBACK CABLE 2090-XXNFMP-S09/C	
W7711	90600-3189		1	MOTOR FEEDBACK CABLE 2090-XXNFMP-S12/C	
W7712	90600-3189		1	MOTOR FEEDBACK CABLE 2090-XXNFMP-S12/C	
W7713	90600-3189		1	MOTOR FEEDBACK CABLE 2090-XXNFMP-S12/C	
W7714	90600-3189		1	MOTOR FEEDBACK CABLE 2090-XXNFMP-S12/C	
W7715	90600-3189		1	MOTOR FEEDBACK CABLE 2090-XXNFMP-S12/C	
W7716	90600-3189		1	MOTOR FEEDBACK CABLE 2090-XXNFMP-S12/C	
W781	90459-2530	M	12	DEVICENET CABLE THIN	
X2716	90459-2551		1	CONNECTOR, MOTOR FEEDBACK 15 PIN MALE	
X7700	90459-2551		1	CONNECTOR, MOTOR FEEDBACK 15 PIN MALE	
X7701	90459-2551		1	CONNECTOR, MOTOR FEEDBACK 15 PIN MALE	
X7702	90459-2551		1	CONNECTOR, MOTOR FEEDBACK 15 PIN MALE	
X7703	90459-2551		1	CONNECTOR, MOTOR FEEDBACK 15 PIN MALE	
X7704	90459-2551		1	CONNECTOR, MOTOR FEEDBACK 15 PIN MALE	
X7705	90459-2551		1	CONNECTOR, MOTOR FEEDBACK 15 PIN MALE	
X7706	90459-2551		1	CONNECTOR, MOTOR FEEDBACK 15 PIN MALE	

Pos	Part No	UN	Qty	Description	Page No

Machine Type | Group Description | Used-In | Group Number | Page No

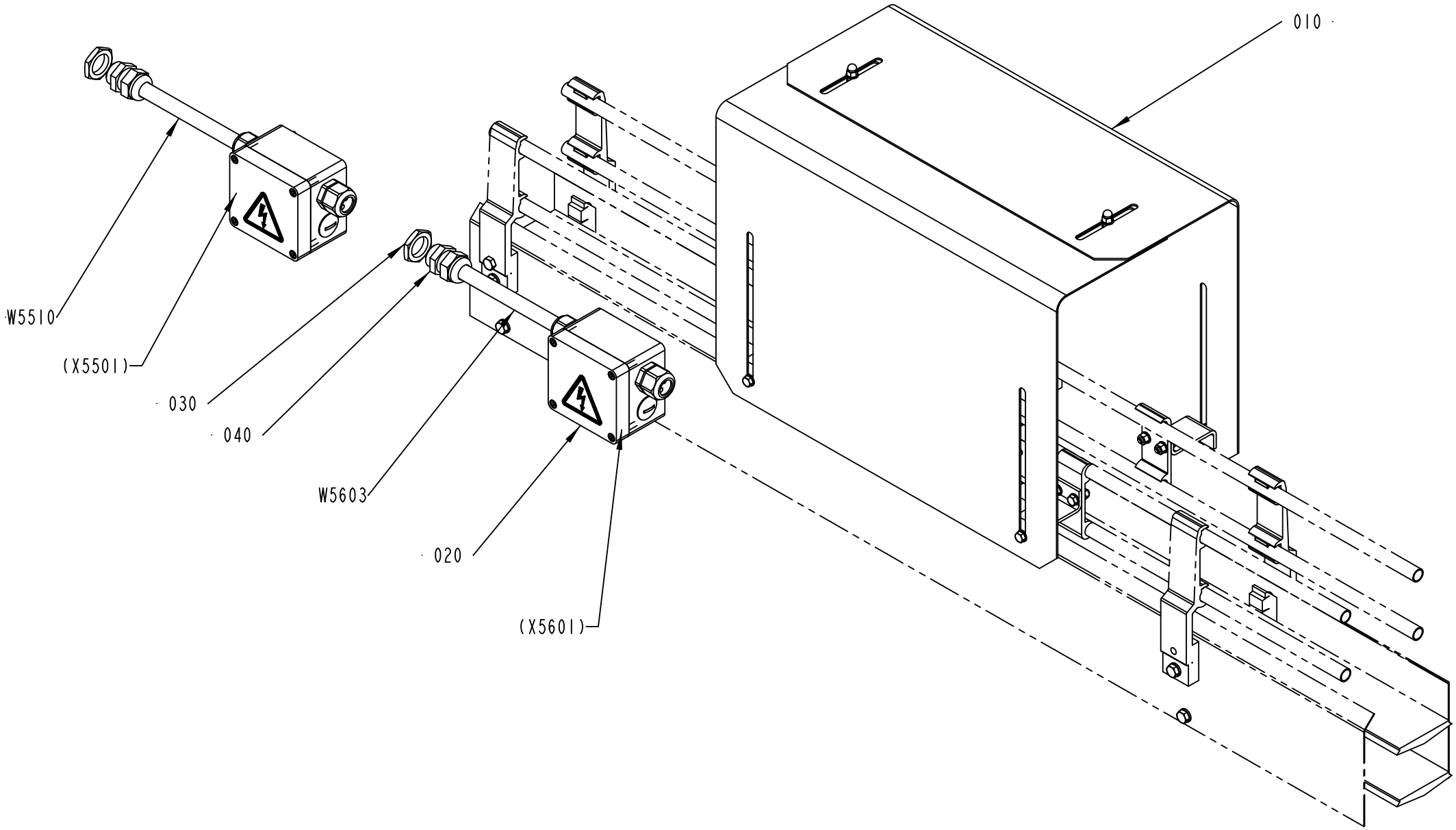

2579995-1
ECM 116811

ECM: 189522 - 20041104
Group number: 2579995-0100
Assembly Drawing: 2579995-1_1_AA

Pos	Part No	UN	Qty	Description	Page No
-					
010	1484196-0100		1	PACK COUNTER	**5-331, 6-81**
020	1484197-0100		2	CONNECTION BOX	**5-333, 6-83**
030	90099-0118		2	NUT, PR 20,4 (PG13,5)	
040	352103-0108		2	CABLE GLAND, ST 13,5 , PR20,4/PG13,5	
W5510	351150-0405	M	10	CABLE OLFLEX 5X0,75 MM2 LIGHT/GREY	
W5603	351150-0405	M	100	CABLE OLFLEX 5X0,75 MM2 LIGHT/GREY	

Pos	Part No	UN	Qty	Description	Page No

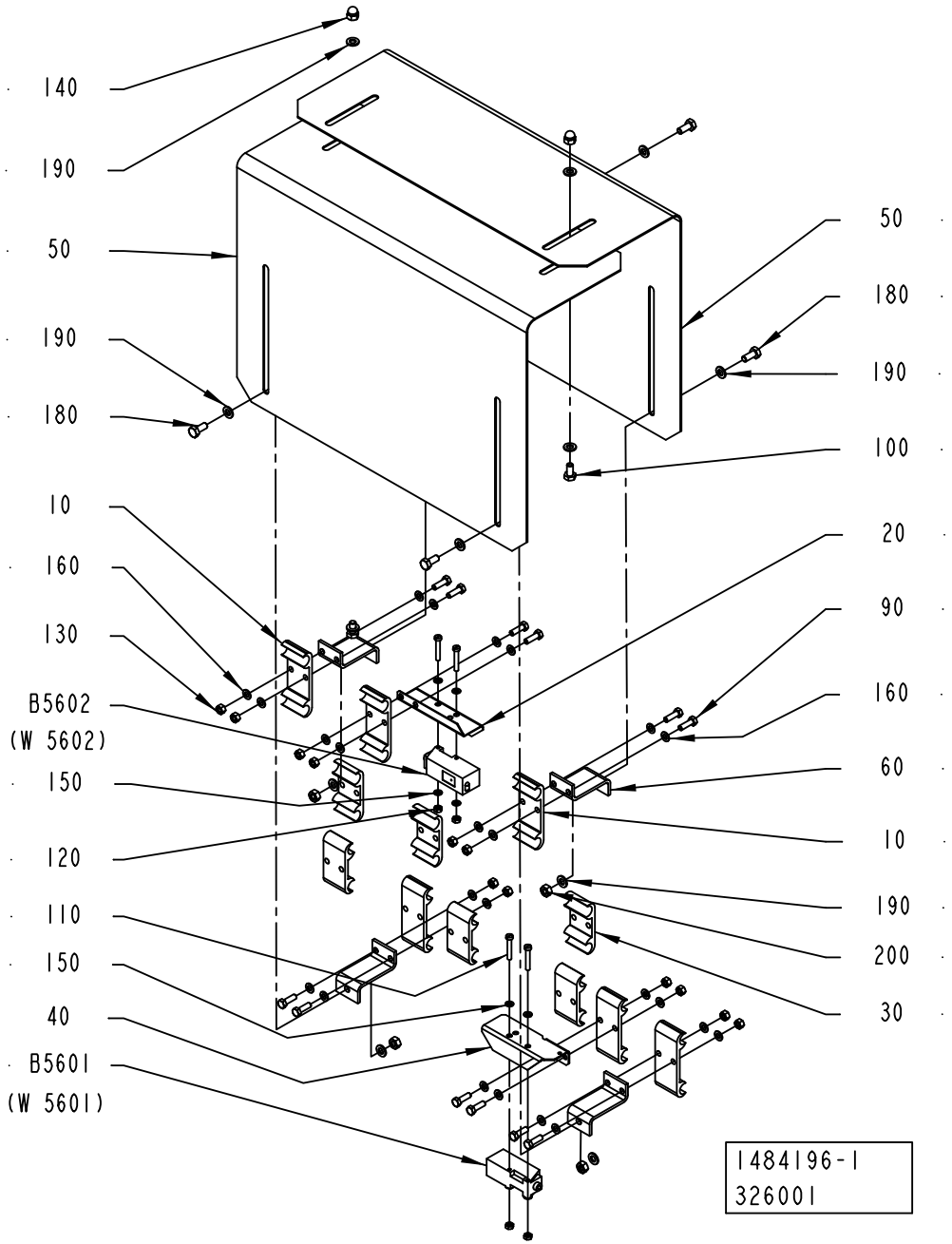
140
190
50
190
180
10
160
130
B5602
(W 5602)
150
120
110
150
40
B5601
(W 5601)
50
180
190
100
20
90
160
60
10
190
200
30
1484196-1
326001

ECM: 348338 - 20090114
Group number: 1484196-0100
Assembly Drawing: 1484196-1_1_AB

Pos	Part No	UN	Qty	Description	Page No
-					
010	1020637-0000		6	HOLDER	
020	1086889-0000		1	COVER	
030	1020638-0000		6	HOLDER	
040	1086888-0000		1	COVER	
050	1349566-0000		2	COVER	
060	1478659-0000		4	BRACKET	
090	312105-0329		12	SCREW M6S ISO 4017 M5X16 A480	
100	312105-0323		2	SCREW M6S ISO 4017 M5X8 A480	
100	312105-0366		2	SCREW M6S ISO 4017 M6X12 A480	
110	312125-0297		4	SCREW ISO 1207 M4X25 A4	
120	312605-0312		4	HEXAGON NUT, M6M M4 A280	
130	312605-0314		16	HEXAGON NUT, M6M M5 A280	
140	312705-0314		2	NUT HEX. DOMED CAP MHM-6 M5 A280	
140	312705-0316		2	NUT HEX. DOMED CAP MHM-6 M6 A280	
150	315105-0136		8	WASHER BRB 4,3X8 RFR	
160	315105-0146		24	WASHER BRB 5,3X10 RFR	
170	312105-0327		4	SCREW M6S ISO 4017 M5X12 A480	
180	312105-0367		4	SCREW M6S ISO 4017 M6X14 A480	
190	315105-0153		12	WASHER BRB 6,4X12 RFR	
200	312605-0316		4	HEXAGON NUT, M6M M6 A280	
B5601	90232-0103		1	PH.CELL E3S-CT61-L-5M	
B5602	90232-0104		1	PH.CELL E3S-CT61-D-5M	

Pos	Part No	UN	Qty	Description	Page No

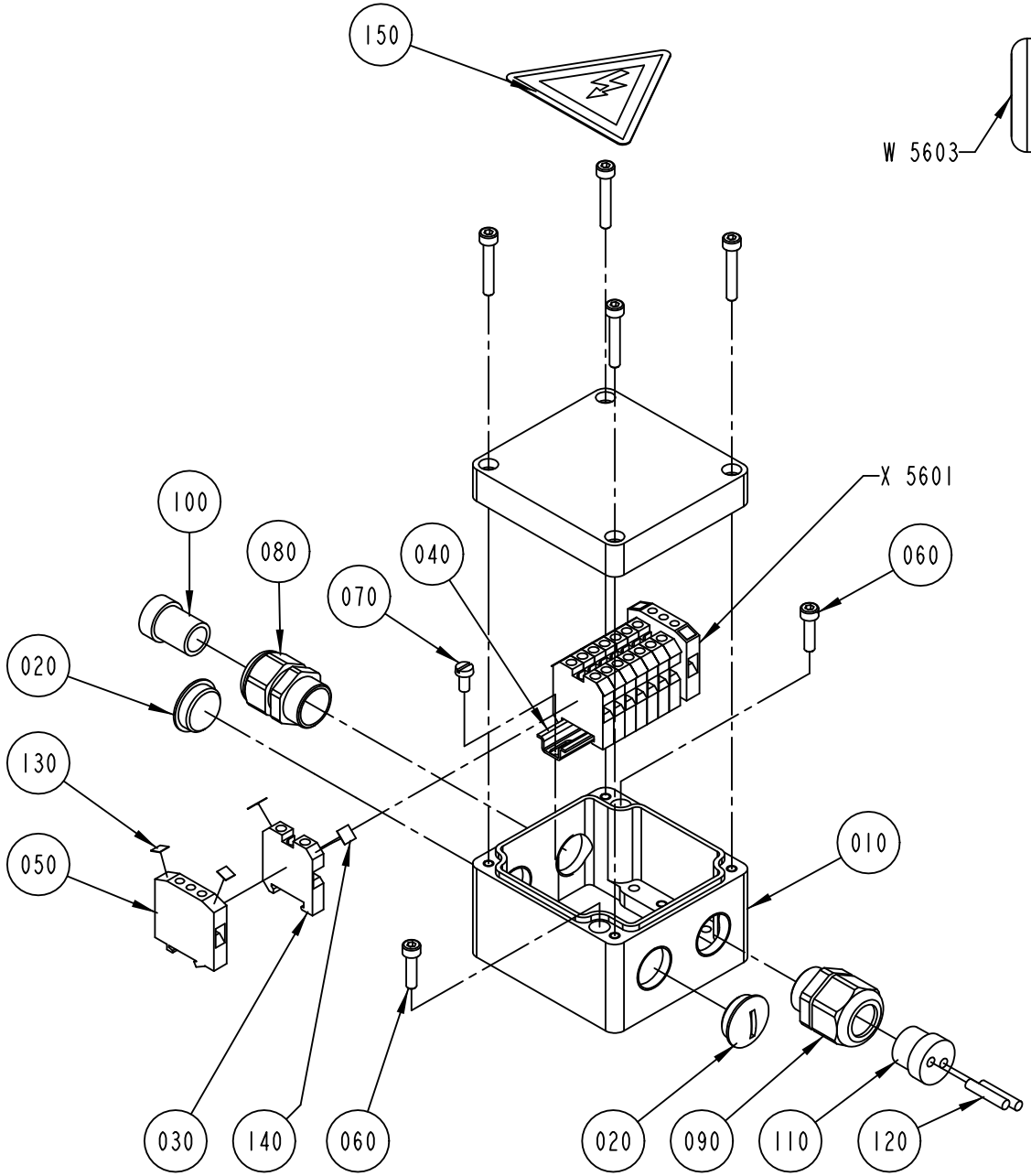

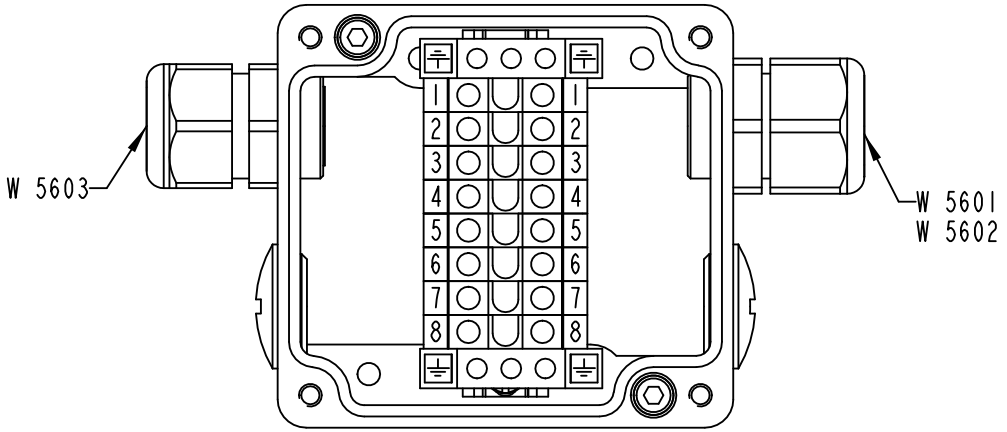

S-1484197-1
ECN 72704

ECM: 189524 - 20041104
Group number: 1484197-0100
Assembly Drawing: 1484197-1_1_AA

Pos	Part No	UN	Qty	Description	Page No
-					
010	1349568-0000		1	CONNECTION BOX	
020	90002-0009		2	BLANK-OFF PLUG, PR 18.6 SKINDICHT-BLK11	
030	90077-0079		8	FEED THROUGH TERMINAL, 02943.6	
040	90077-0328	MM	65	RAIL TS15/5	
050	90135-0026		2	EARTH TERMINAL, 3802.6	
060	312115-0293		2	SCREW ISO4762 M4X16 A4 80	
070	312125-0287		2	SCREW ISO 1207 M4X8 A4	
080	353240-0002		1	GLAND W/O INSERT PG11 NORMAL	
090	353241-0002		1	GLAND W/O INSERT PG11 EXTENDED	
100	353249-0003		1	INSERT, SINGLE HOLE, E151/11	
110	353249-0036		1	INSERT, MULTI HOLE, EK152 M 2X4	
120	353249-0301		2	SEALING PIN, 4X20	
130	359011-0819		4	MARKING PLATES 5-GW (EARTH)	
140	359011-0821		2	SET OF SIGNS 6-FW 1-50	
150	359705-0015		1	WARNING SIGN ISO, RISK OF ELECTRIC SHOCK	

Pos	Part No	UN	Qty	Description	Page No

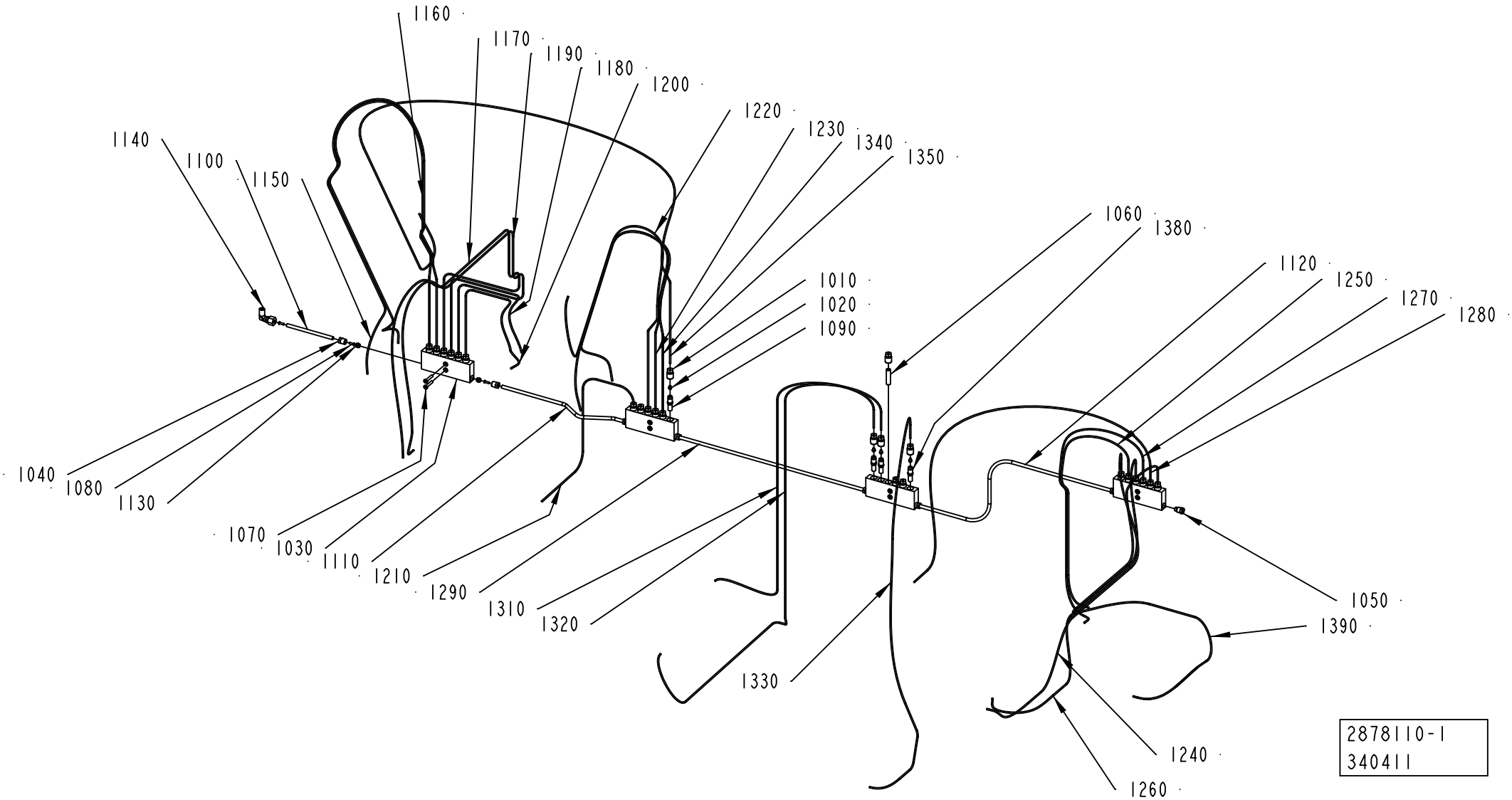
1160
1170
1190
1180
1200
1220
1230
1340
1350
1140
1100
1150
1060
1380
1120
1250
1270
1280
1010
1020
1090
1040
1080
1130
1070
1030
1110
1210
1290
1310
1320
1050
1390
1330
1240
1260
2878110-1
340411

ECM: 369827 - 20090101
Group number: 2878110-0100
Assembly Drawing: 2878110-1_1_AB

Pos	Part No	UN	Qty	Description	Page No
-					
1010	90134-0039		24	BUSHING VALVE CONNECTION 2,5 MM	
1020	90028-0020		20	CONE TUBE 2,5MM	
1030	90459-5652		4	LUBRICATION BLOCK, HFS4666	
1040	90134-0055		7	BUSHING/NUT INLET/OUTLET 6 MM	
1050	90087-0019		1	PLUG M10X1 STAINLESS	
1060	90134-0052		4	PLUG DOSING BLOCK	
1070	312155-0297		8	SCREW DIN 7991 MF6S M4X25 A4 70	
1080	90134-0030		8	SLEEVE FOR PLASTIC TUBE	
1090	90092-0052		17	METERING VALVE 10 MM3	
1100	90166-0108	M	3	TUBE 6 MM PA TRANSP.	
1110	90166-0108	MM	290	TUBE 6 MM PA TRANSP.	
1120	90166-0108	MM	494	TUBE 6 MM PA TRANSP.	
1130	90028-0022		7	CONE TUBE 6 MM	
1140	90030-0200		1	CONN. ELBOW, 6-M10X1, EXT.THREAD	
1150	90166-0143	MM	1170	TUBE 2,5 MM PA TRANSP.	
1160	90166-0143	MM	1170	TUBE 2,5 MM PA TRANSP.	
1170	90166-0143	MM	1075	TUBE 2,5 MM PA TRANSP.	
1180	90166-0143	MM	440	TUBE 2,5 MM PA TRANSP.	
1190	90166-0143	MM	1220	TUBE 2,5 MM PA TRANSP.	
1200	90166-0143	MM	450	TUBE 2,5 MM PA TRANSP.	
1210	90166-0143	MM	520	TUBE 2,5 MM PA TRANSP.	
1220	90166-0143	MM	1720	TUBE 2,5 MM PA TRANSP.	
1230	90166-0143	MM	1290	TUBE 2,5 MM PA TRANSP.	
1240	90166-0143	MM	1050	TUBE 2,5 MM PA TRANSP.	
1250	90166-0143	MM	665	TUBE 2,5 MM PA TRANSP.	
1260	90166-0143	MM	1085	TUBE 2,5 MM PA TRANSP.	
1270	90166-0143	MM	715	TUBE 2,5 MM PA TRANSP.	
1280	90166-0143	MM	930	TUBE 2,5 MM PA TRANSP.	
1290	90166-0108	MM	445	TUBE 6 MM PA TRANSP.	
1310	90166-0143	MM	1500	TUBE 2,5 MM PA TRANSP.	
1320	90166-0143	MM	1390	TUBE 2,5 MM PA TRANSP.	
1330	90166-0143	MM	1200	TUBE 2,5 MM PA TRANSP.	
1340	90166-0143	MM	1200	TUBE 2,5 MM PA TRANSP.	
1350	90166-0143	MM	1200	TUBE 2,5 MM PA TRANSP.	
1380	90092-0054		3	METERING VALVE 50 MM3	
1390	90166-0143	MM	1200	TUBE 2,5 MM PA TRANSP.	

Pos	Part No	UN	Qty	Description	Page No

Machine Type | Group Description | Used-In | Group Number | Page No

Tetra Pak

SPC
Spare Parts Catalogue

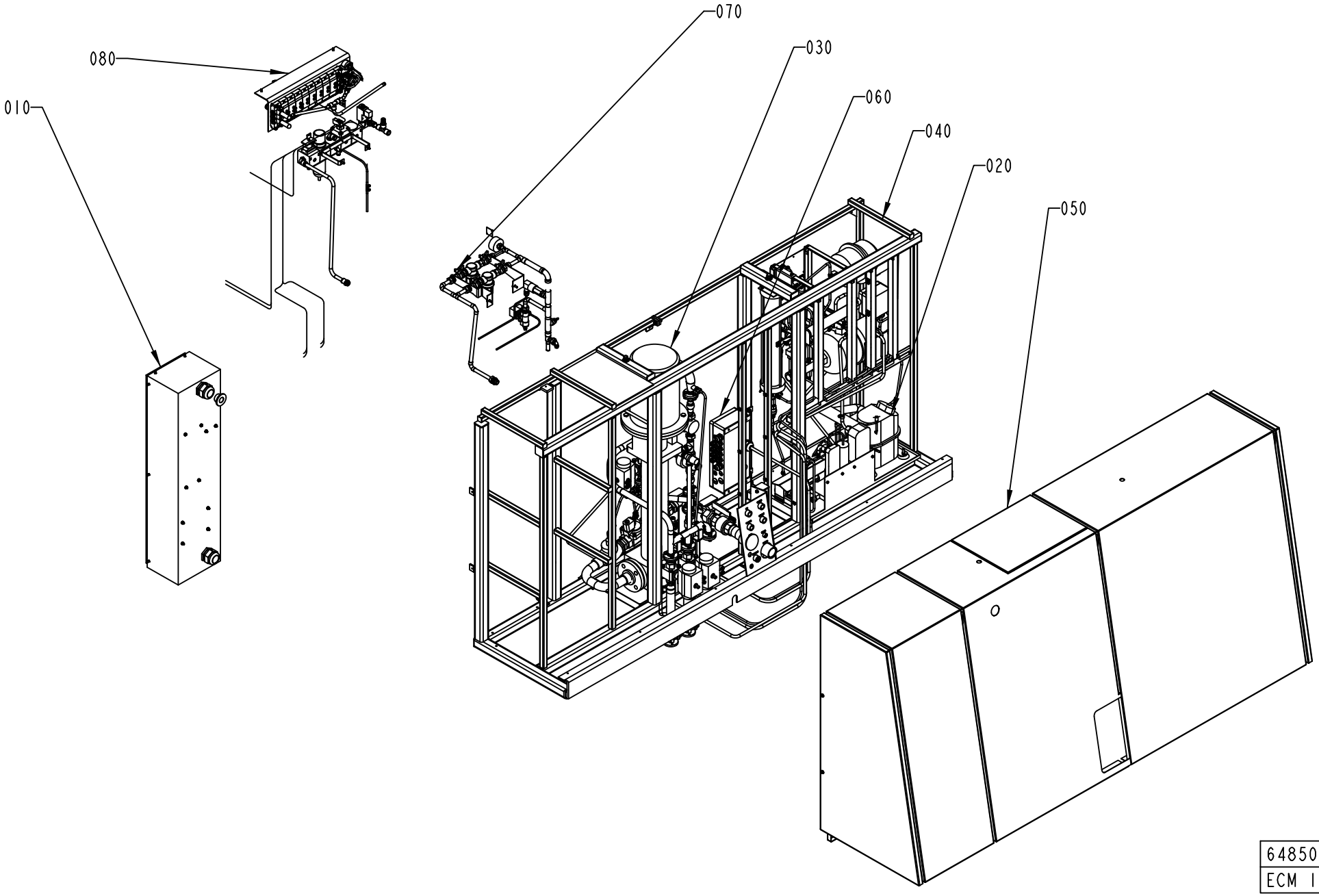
070
030
060
040
020
050
080
010
648506-2
ECM 139813

ECM: 268357 - 20060703
Group number: 648506-0400
Assembly Drawing: 648506-2_1_AD

This list covers pages from 7-2 to 7-5

Pos	Part No	UN	Qty	Description	Page No
A3/FLEX DIMC/FLEX, A3/FLEX TBA 2000S NODIMC, A3/FLEX TBA 1890S NODIMC, A3/FLEX TBA 1400B NODIMC (See drawing on page: 7-4)					
090	2623714-0100		1	PEROXIDE REDUCER	**7-7**
100	2623718-0100		1	PEROXIDE REDUCER	**7-9**
Common Parts					
010	1095610-0300		1	MAIN SWITCH	**7-11**
020	1095612-0300		1	COOLING WATER SYSTEM	**7-13, 7-15**
030	1095627-0300		1	FOAM CLEANING UNIT	**7-33**
040	2613034-0100		1	MACHINE BODY	**7-49**
050	1095607-0200		1	COVERING PANEL	**7-51**
060	1095630-0200		1	CONNECTION BOX	**7-69**
070	1095608-0100		1	WATER PANEL	**7-71, 7-73**
080	1095714-0300		1	SUPPLY SYSTEM	**7-75**

Pos	Part No	UN	Qty	Description	Page No

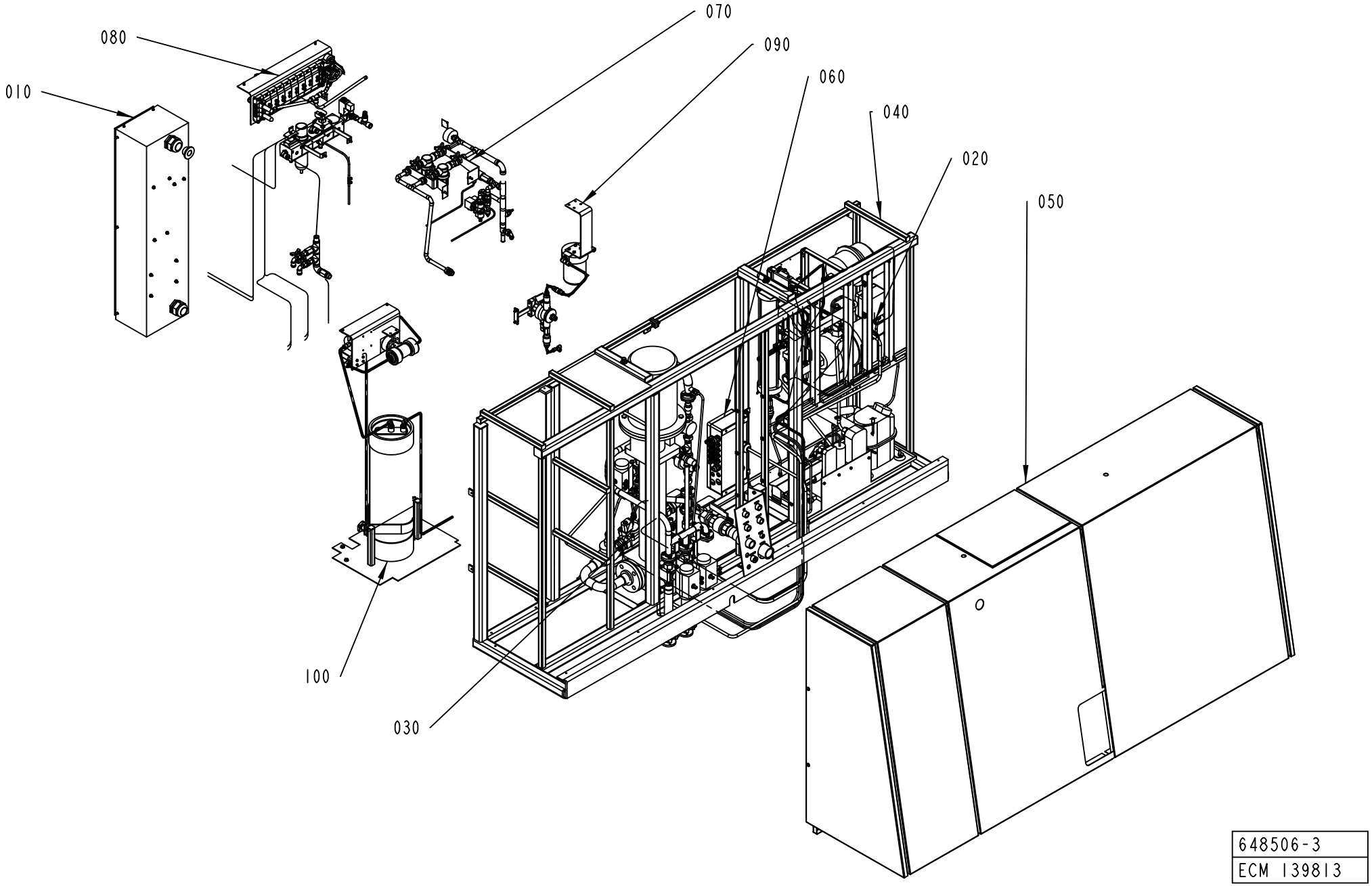
070
080
090
060
010
040
020
050
100
030
648506-3
ECM 139813

ECM: 268357 - 20060703
Group number: 648506-0400
Assembly Drawing: 648506-3_1_AB

This list covers pages from 7-2 to 7-5

Pos	Part No	UN	Qty	Description	Page No
A3/FLEX DIMC/FLEX, A3/FLEX TBA 2000S NODIMC, A3/FLEX TBA 1890S NODIMC, A3/FLEX TBA 1400B NODIMC (See drawing on page: 7-4)					
090	2623714-0100		1	PEROXIDE REDUCER	**7-7**
100	2623718-0100		1	PEROXIDE REDUCER	**7-9**
Common Parts					
010	1095610-0300		1	MAIN SWITCH	**7-11**
020	1095612-0300		1	COOLING WATER SYSTEM	**7-13, 7-15**
030	1095627-0300		1	FOAM CLEANING UNIT	**7-33**
040	2613034-0100		1	MACHINE BODY	**7-49**
050	1095607-0200		1	COVERING PANEL	**7-51**
060	1095630-0200		1	CONNECTION BOX	**7-69**
070	1095608-0100		1	WATER PANEL	**7-71, 7-73**
080	1095714-0300		1	SUPPLY SYSTEM	**7-75**

Pos	Part No	UN	Qty	Description	Page No

PEROXIDE REDUCER

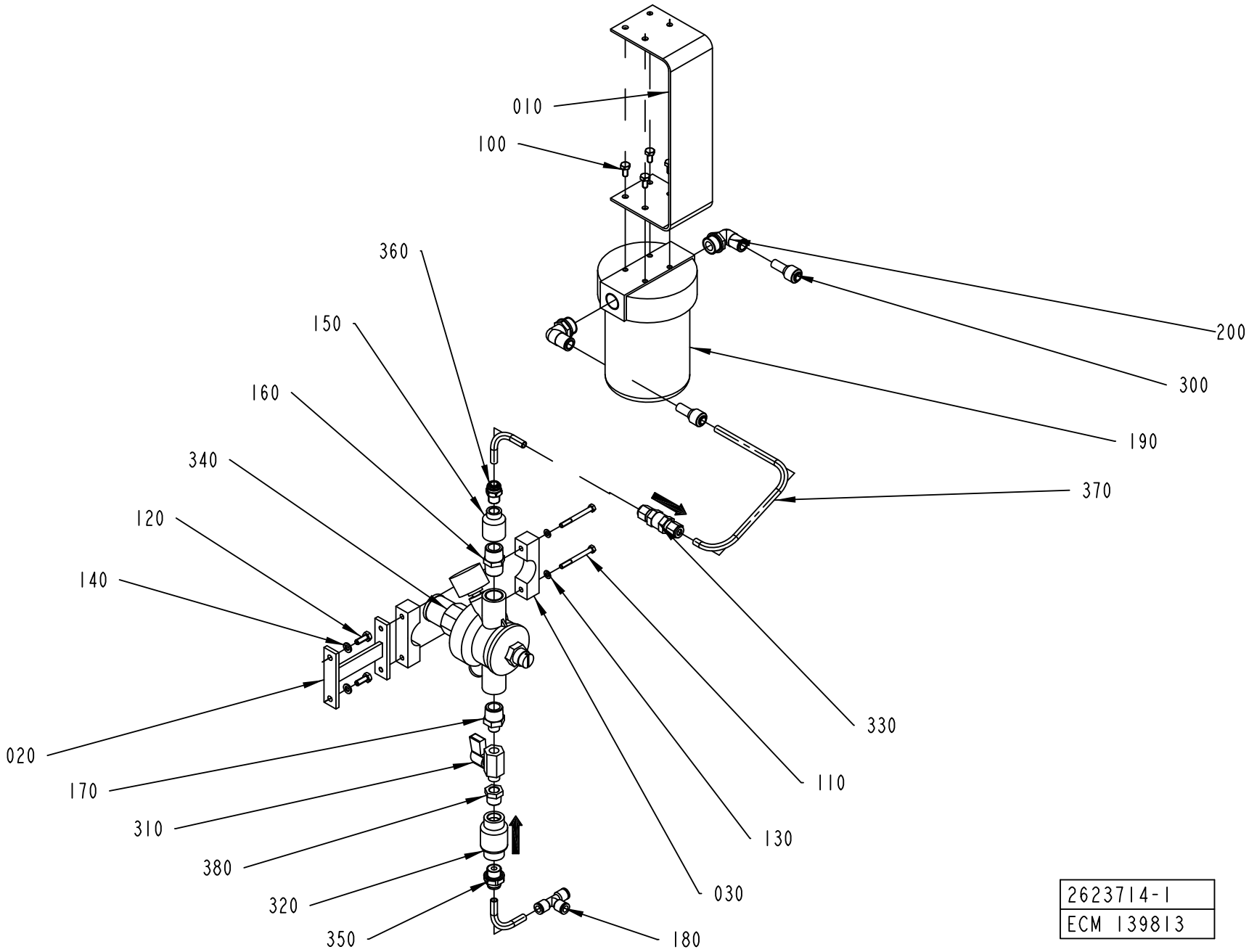

2623714-1
ECM 139813

ECM: 383503 - 20090115
Group number: 2623714-0100
Assembly Drawing: 2623714-1_1_AB

Pos	Part No	UN	Qty	Description	Page No
-					
010	2604069-0000		1	BRACKET	
020	2623715-0000		1	HOLDER	
030	2623717-0000		2	HOLDER	
100	312105-0366		4	SCREW M6S ISO 4017 M6X12 A480	
110	312105-0341		2	SCREW M6S ISO 4014 M5X50 A480	
120	312105-0368		2	SCREW M6S ISO 4017 M6X16 A480	
130	315105-0146		2	WASHER BRB 5,3X10 RFR	
140	315105-0153		2	WASHER BRB 6,4X12 RFR	
150	342217-0103		1	SLEEVE, REDUCTION, INT, R-2021/2X1/4	
160	90330-0021		1	NIPPLES, EXT. THREAD. R-207R1/2	
170	342203-0107		1	NIPPLES, EXT. THREAD, HEXAGON,ÿNO. 209	
180	90055-0276		1	T-CONNECTION 8 MM	
190	90415-0065		1	FILTER	
010	*90415-0357*		*1*	*FILTER INSERT*	
200	90459-2769		2	ELBOW PIPE JOINT, EXT.THREAD,D=10MM-G1/2	
300	90055-0249		2	REDUCER 8-10	
310	90187-0045		1	BALL VALVE G1/4 CR PL	
320	90230-0040		1	NON-RETURN VALVE, R3/8, L=55	
330	90230-0032		1	NON-RETURN VALVE, 8MM, L=63,25	
340	90458-0201		1	FLUID AUT. FEEDER, ALINOX 1/2 46.04.00	
350	90458-1963		1	STRAIGHT COUPLING D=8-G3/8"	
360	90459-0997		1	STRAIGHT COUPLING D=8-R1/4"	
370	90166-0188	MM	700	PLASTIC HOSE	
380	90330-0042		1	BUSHING, INT/EXT. THR. R3/8-RP1/4	

Pos	Part No	UN	Qty	Description	Page No

Machine Type | Group Description | Used-In | Group Number | Page No

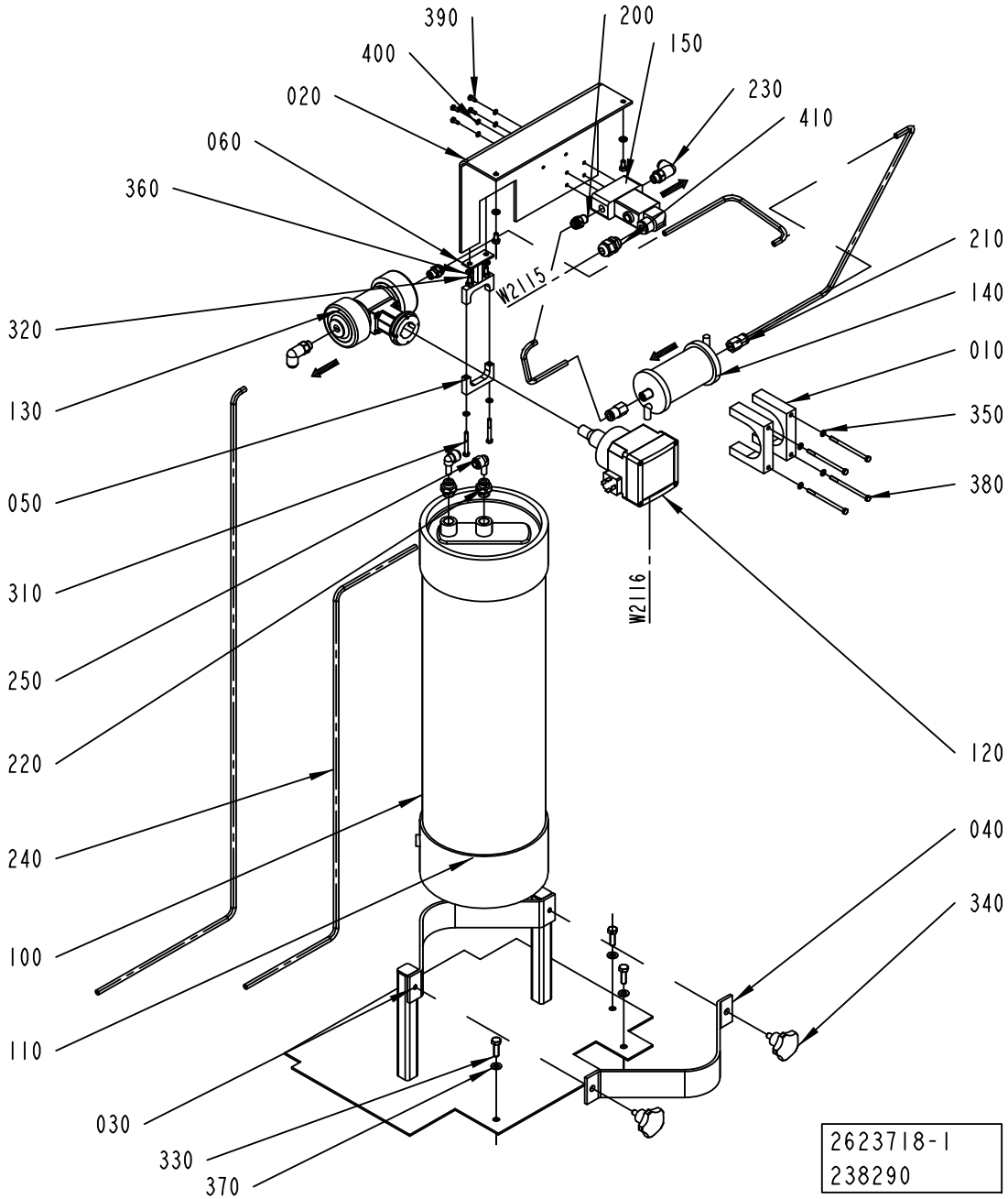
390
200
400
150
020
230
060
410
360
210
W2115
320
140
130
010
350
050
380
310
W2116
250
120
220
040
240
340
100
110
030
330
370
2623718-1
238290

ECM: 383502 - 20090115
Group number: 2623718-0100
Assembly Drawing: 2623718-1_1_AC

Pos	Part No	UN	Qty	Description	Page No
-					
010	2623712-0000		2	HANGER	
020	2623713-0000		1	HOLDER	
030	2623719-0000		1	HOLDER	
040	2623720-0000		1	HOLDER	
050	1549344-0000		1	HOLDER	
060	2510755-0000		1	BRACKET	
100	90459-1996		1	FILTER CULLIGAN REFILL LINE 10 760665	
	90459-2004		*1*	*FILTER CARTRIDGE ION-EXCHANGE, 759807*	
110	90459-2004		1	FILTER CARTRIDGE ION-EXCHANGE, 759807	
120	90458-2174		1	CONDUCTIVITY TRANSMITTER, 418962Z	
130	90458-2173		1	PIPE CONNECTION, 552608M	
140	90459-1472		1	FILTER, KW0604NP3	
150	90042-0170		1	SOLENOID VALVE BüRKERT	
200	90459-0997		2	STRAIGHT COUPLING D=8-R1/4"	
210	90055-0266		2	STRAIGHT CONNECTION	
220	90458-1963		2	STRAIGHT COUPLING D=8-G3/8"	
230	90055-0267		2	ELBOW PIPE JOINT,EXT.THREAD,D=8 MM G1/4	
240	90166-0118	M	10	TUBE 8 MM PA BLACK	
250	90055-0250		2	ELBOW WITH TAILPIECE 8/8 MM	
310	312105-0339		2	SCREW M6S ISO 4014 M5X40 A480	
320	312105-0366		4	SCREW M6S ISO 4017 M6X12 A480	
330	312105-0453		3	SCREW M6S ISO 4017 M8X25 A480	
340	318856-0112		2	KNOB, EXTERNAL THREAD. NO. 8306-0227	
350	315105-0146		6	WASHER BRB 5,3X10 RFR	
360	315105-0153		4	WASHER BRB 6,4X12 RFR	
370	315105-0165		3	WASHER BRB 8,4X16 RFR	
380	90458-1614		4	SCREW M6S ISO 4014 M5X80 A480	
390	312105-0289		4	SCREW M6S H4X10 A4 70 ISO4017/DIN933	
400	315105-0136		4	WASHER BRB 4,3X8 RFR	
410	352103-0106		1	CABLE GLAND, ST 11, PR18,6/PG11	

Pos	Part No	UN	Qty	Description	Page No

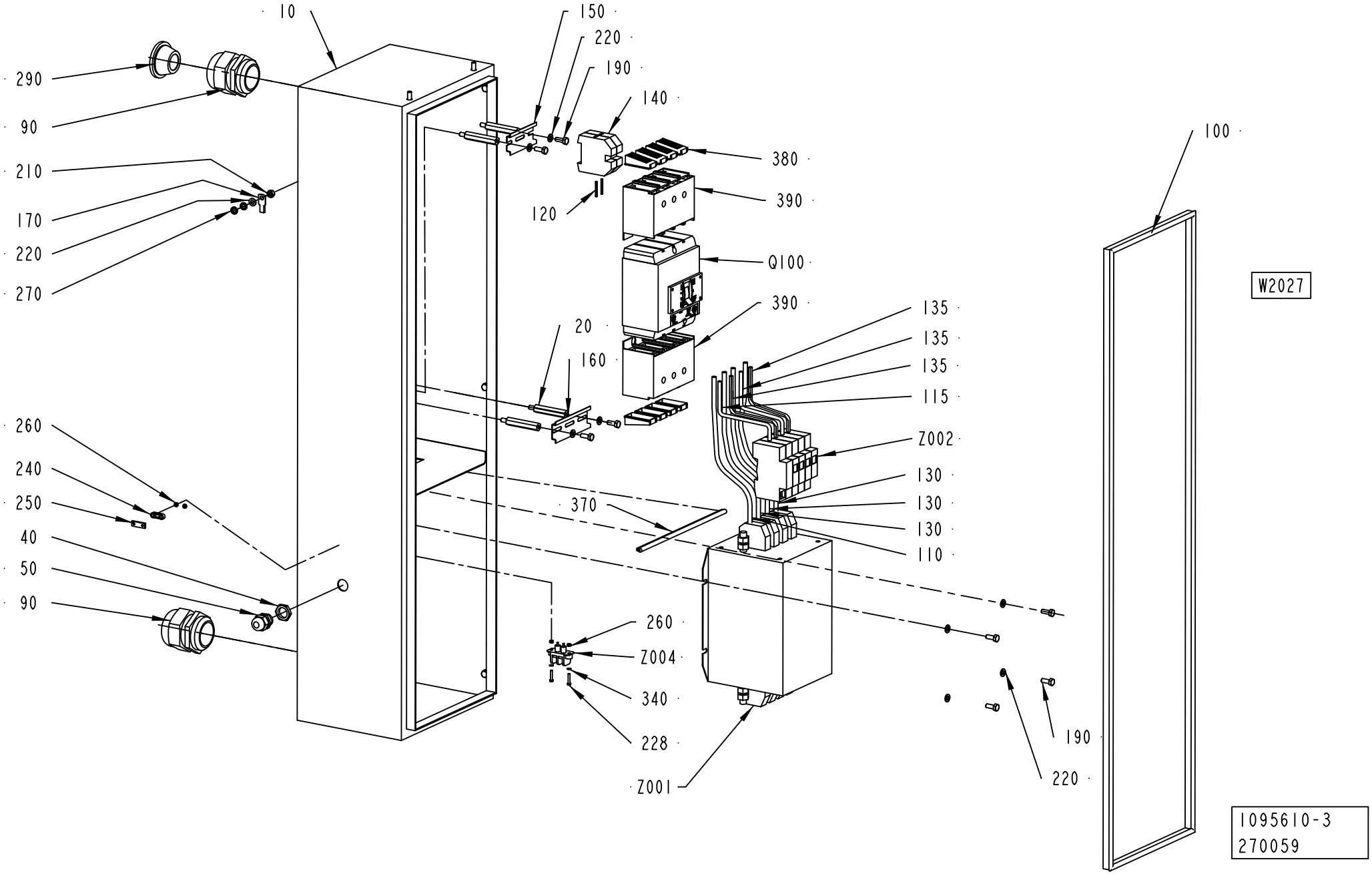
10
150
220
190
140
380
390
120
Q100
390
20
160
135
135
135
115
Z002
130
130
130
110
370
100
W2027
290
90
210
170
220
270
260
240
250
40
50
90
260
Z004
340
228
Z001
190
220
1095610-3
270059

ECM: 384871 - 20090402
Group number: 1095610-0300
Assembly Drawing: 1095610-3_1_AD

Pos	Part No	UN	Qty	Description	Page No
-					
010	2842999-0000		1	CABINET	
020	1037184-0000		4	SPACER SCREW	
040	90099-0117		1	NUT, PR 18,6 (PG11)	
050	352103-0106		1	CABLE GLAND, ST 11, PR18,6/PG11	
060	90099-0085		1	NUT	
070	90099-0096		1	NUT	
090	352103-0123		2	CABLE GLAND, ST 42, PR54,0/PG42	
100	90143-0057	MM	2600	STRIP EMKA 1011-05 21X11MM	
110	351161-0110	MM	2400	WIRE AWM 1X25 MM2 LIGHTBLUE	
115	351161-0111	MM	240	WIRE AWM 1X35 MM2 LIGHTBLUE	
120	351162-0109	MM	850	WIRE AWM 1X16 MM2 YELLOW-GREEN	
130	351164-0111	MM	6000	WIRE AWM 1X35 MM2 BLACK	
135	351164-0111	MM	600	WIRE AWM 1X35 MM2 BLACK	
140	353024-0209		2	EARTH TERMINAL, 1010.5	
150	353042-0005	MM	75	RAIL TS 35/7.5	
160	353042-0005	MM	100	RAIL TS 35/7.5	
170	353104-0168		1	CABLE SHOE, RING UNINS., YAV 16 M 6	
180	353105-0200		9	PIN CABLE SHOE A4630SR	
190	312105-0368		13	SCREW M6S ISO 4017 M6X16 A480	
210	312605-0316		1	HEXAGON NUT, M6M M6 A280	
220	315105-0153		16	WASHER BRB 6,4X12 RFR	
230	90143-0060	MM	600	EDGE STRIP 9,5X6,3MM BLACK PVC	
240	90220-0303		1	CLAMP FOR SCR.CABLE, 10MM, 55-016-22	
250	90220-0305		1	CLAMP FOR SCR.CABLE, 16MM,	
260	312605-0310		2	HEXAGON NUT, M6M M3 A280	
270	90062-0015		2	LOCK WASHER SERRAT.EXT.GEAR,6,4/11 H=0,7	
280	90166-0232	MM	500	SHRINKABLE HOSE	
290	90015-0025		1	LEAD-IN, TET26-35, E-1458041	
300	1129402-0000		4	SPACER SCREW	
340	315105-0124		4	WASHER BRB 3,2X6 RFR	
370	90143-0060	MM	250	EDGE STRIP 9,5X6,3MM BLACK PVC	
380	90459-6616		1	FINGER PROTECTION IP20, NZM1-4-XIPA	
390	90459-6617		1	COVER 4-POLE, NZM1-4-XKSA	
Q100	90459-6618		1	CIRCUIT BREAKER, NZMB1-4-A100	
W2027	90220-0095	MM	3000	SCR. CABLE 3X0,75MM2	
Z001	90024-0060		1	FILTER 80 A 440/250 VAC, B84144-A80-R	
Z002	90082-0013		1	OVER VOLT. PROTECT. PU 4C-R 230 VAC	
	90082-0301		*3*	*OVER VOLT. PROTECT. PU 0 C 833951*	
Z004	90024-0036		1	FEED THROUGH FILTER, 52-160-002	

Pos	Part No	UN	Qty	Description	Page No

Machine Type | Group Description | Used-In | Group Number | Page No

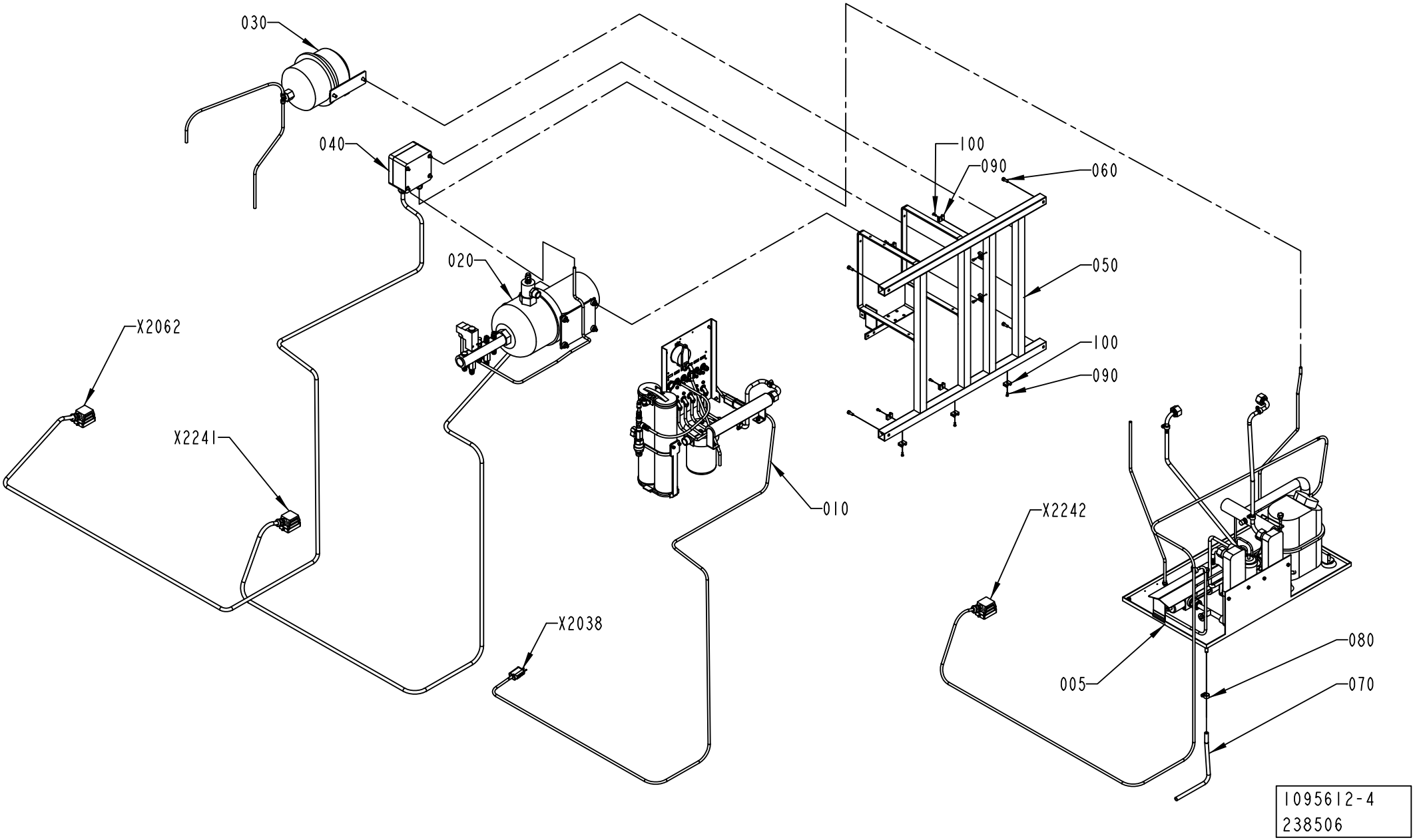
030
040
020
X2062
X2241
010
X2038
100
090
060
050
100
090
X2242
005
080
070
1095612-4
238506

ECM: 256723 - 20060313
Group number: 1095612-0300
Assembly Drawing: 1095612-4_1_AD

This list covers pages from 7-12 to 7-15

Pos	Part No	UN	Qty	Description	Page No
A3/FLEX COMPRESSOR (See drawing on page: 7-12)					
005	1095710-0300		1	COMPRESSOR UNIT	**7-17**
010	2552113-0100		1	FLOW METER	**7-19**
A3/FLEX ICE-WATER (See drawing on page: 7-14)					
007	1260547-0100		1	ICE WATER UNIT	**7-23**
010	2552113-0100		1	FLOW METER	**7-19**
Common Parts					
020	1095706-0300		1	COOLING WATER PUMP	**7-27**
030	2514077-0100		1	EXPANSION VESSEL	**7-29**
040	1095709-0200		1	CONNECTION BOX	**7-31**
050	1129141-0000		1	MACHINE BODY	
060	312115-0368		4	SCREW ISO4762 M6X16 A4 80	
070	90166-0121	MM	1000	HOSE	
080	342991-0101		1	HOSE CLIP,WORM DRIVE TYPE (13)-16	
090	352113-0203		9	ANCHOR PLATES FOR STRIPS, TYPE TM3S8-M0	
100	312125-0289		9	SCREW ISO 1207 M4X10 A4	

Pos	Part No	UN	Qty	Description	Page No

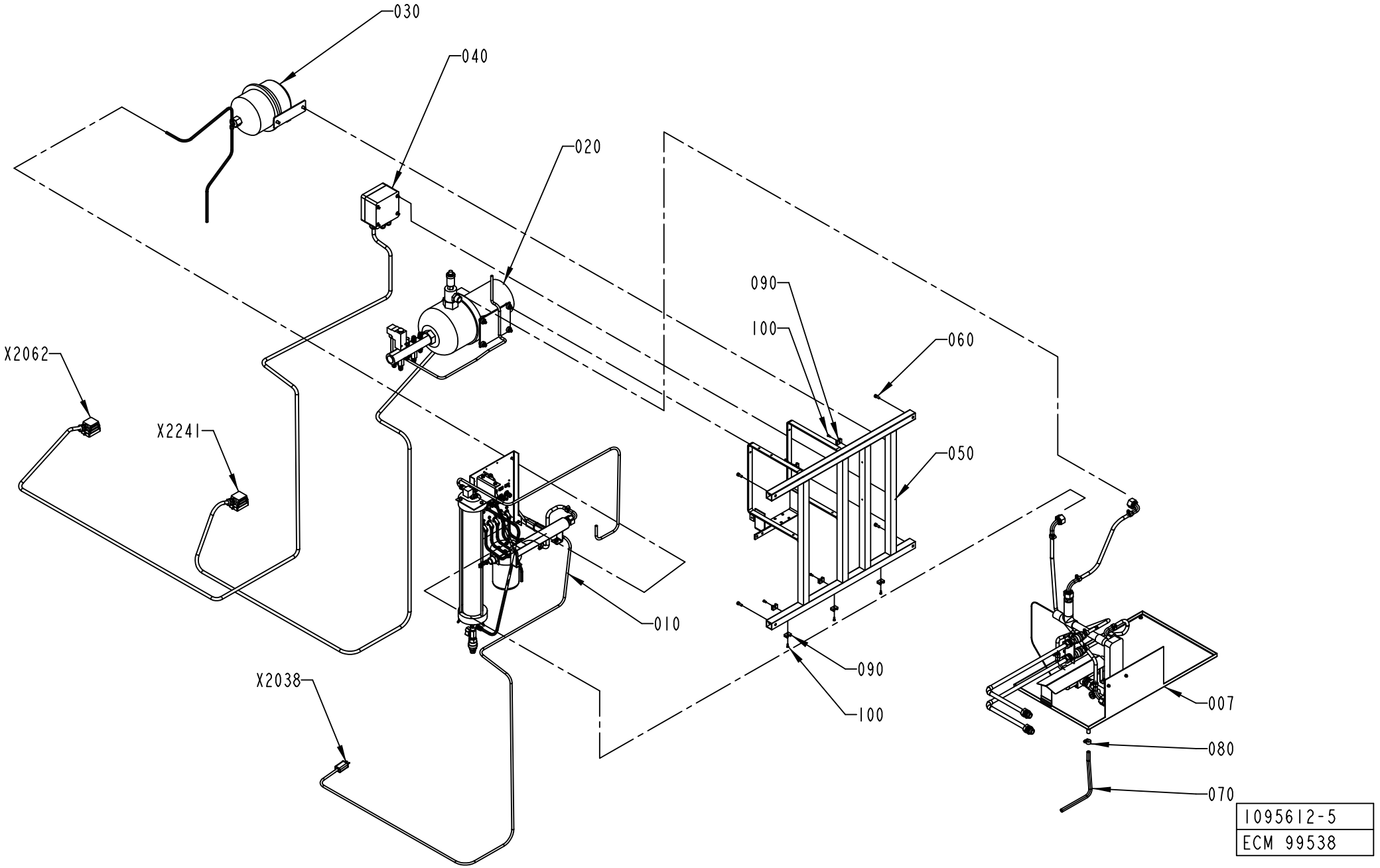
030
040
020
090
100
060
X2062
X2241
050
010
090
100
X2038
007
080
070
1095612-5
ECM 99538

ECM: 256723 - 20060313
Group number: 1095612-0300
Assembly Drawing: 1095612-5_1_AC

This list covers pages from 7-12 to 7-15

Pos	Part No	UN	Qty	Description	Page No
A3/FLEX COMPRESSOR (See drawing on page: 7-12)					
005	1095710-0300		1	COMPRESSOR UNIT	**7-17**
010	2552113-0100		1	FLOW METER	**7-19**
A3/FLEX ICE-WATER (See drawing on page: 7-14)					
007	1260547-0100		1	ICE WATER UNIT	**7-23**
010	2552113-0100		1	FLOW METER	**7-19**
Common Parts					
020	1095706-0300		1	COOLING WATER PUMP	**7-27**
030	2514077-0100		1	EXPANSION VESSEL	**7-29**
040	1095709-0200		1	CONNECTION BOX	**7-31**
050	1129141-0000		1	MACHINE BODY	
060	312115-0368		4	SCREW ISO4762 M6X16 A4 80	
070	90166-0121	MM	1000	HOSE	
080	342991-0101		1	HOSE CLIP,WORM DRIVE TYPE (13)-16	
090	352113-0203		9	ANCHOR PLATES FOR STRIPS, TYPE TM3S8-M0	
100	312125-0289		9	SCREW ISO 1207 M4X10 A4	

Pos	Part No	UN	Qty	Description	Page No

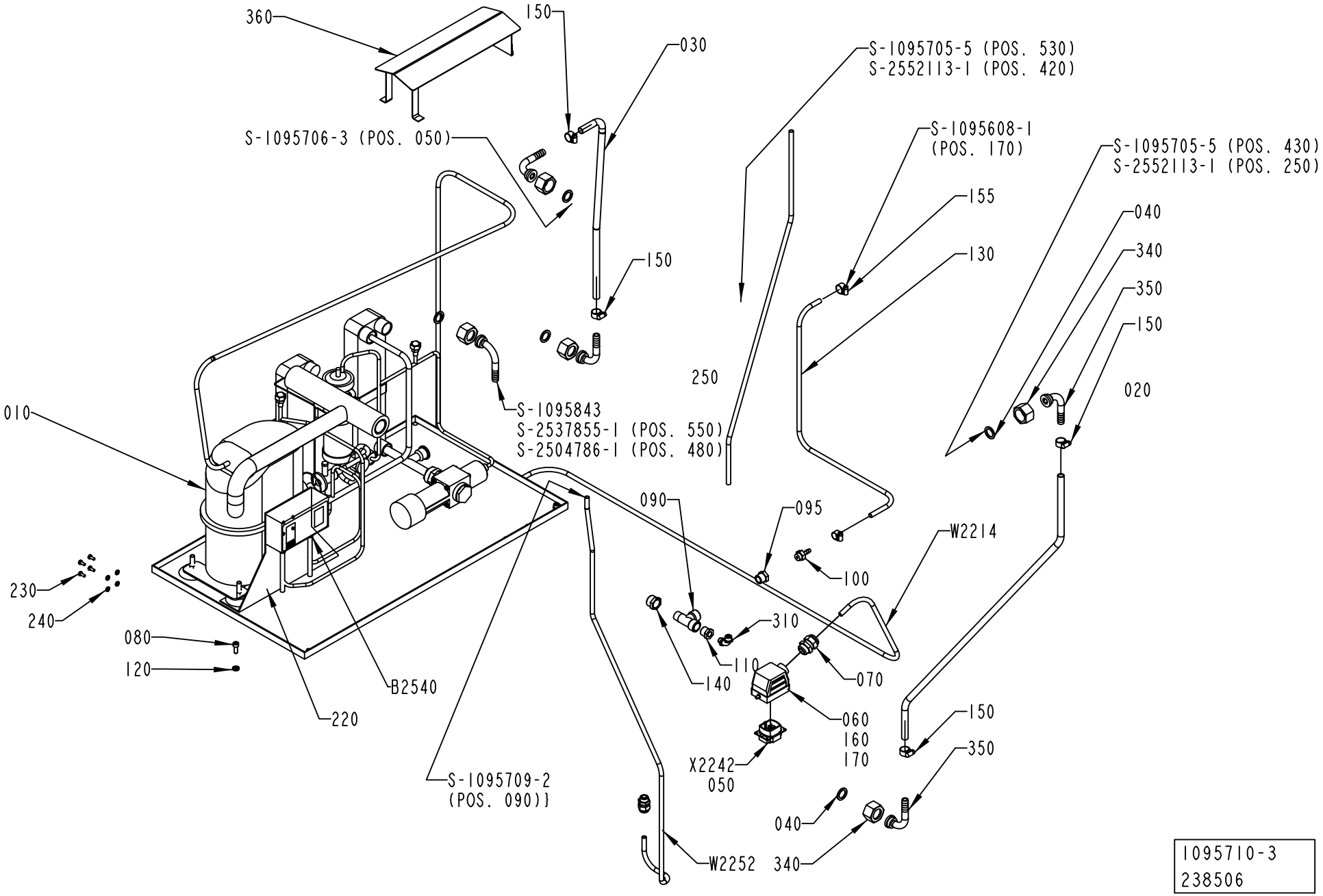

1095710-3
238506

ECM: 384874 - 20090402
Group number: 1095710-0300
Assembly Drawing: 1095710-3_1_AF

Pos	Part No	UN	Qty	Description	Page No
A3/FLEX					
010	1140603-0000		1	COMPRESSOR UNIT	
	90459-6804		*1*	*CONDENSER, B8/14 CONNECTION 2/22U + 2/1/*	
	90459-6802		*1*	*COMPRESSOR, TAJ4511Y*	
	90459-6809		*1*	*EXP. VALVE TUB ORIF 5 R134A, 068U2004*	
	342713-0213		*1*	*PLUG, EXT THREAD HEX SOCKET 8638-00-120*	
	90459-6800		*1*	*CAPACITY REGULATOR, KVP 12*	
	90459-6799		*1*	*THERMOST. VALVE,WVFX 15 3.5-16 BAR 1/2"*	
	90459-6798		*1*	*DRYING FILTER, DMC 2032S*	
	90422-0037		*1*	*HEAT EXCHANGER*	
	90274-0123		*1*	*PRESSURE SWITCH, KP 1560-1254*	
W 2214	351150-0418	MM	4000	CABLE OLFLEX 4X2,5 MM2 LIGHT/GREY	
Common Parts					
020	90166-0121	MM	930	HOSE	
030	90166-0121	MM	840	HOSE	
040	90459-3339		5	GASKET NBR/PTFE 17X24X2 MM 3/4"	
050	90110-0159		1	MALE INSERT 70.310.0640.0	
060	90110-0226		1	CABLE HOOD 6-POL 70.350.0628.0	
070	352103-0108		1	CABLE GLAND, ST 13,5 , PR20,4/PG13,5	
080	312115-0368		2	SCREW ISO4762 M6X16 A4 80	
090	90140-0023		1	T-PIPE, INT. THREAD, NO. 2070-3/8-3/8	
095	90330-0042		1	BUSHING, INT/EXT. THR. R3/8-RP1/4	
100	342901-0102		1	HOSE NIPPLE, EXT.THR. R1/4-7 MM	
110	342701-0202		1	BUSHING,INT./EXT.G-THREAD G3/8"-G1/8"	
120	315115-0153		2	WASHER PLAIN, TBRB 6,4/12 H=3	
130	90166-0045	MM	705	HOSE PVC TRANSP. 6/12	
140	342701-0206		1	BUSHING,INT./EXT.G-THREAD G1/2"-G3/8"	
150	342991-0101		4	HOSE CLIP,WORM DRIVE TYPE (13)-16	
155	342991-0100		2	HOSE CLIP,WORM DRIVE TYPE 10-13	
160	359005-0050		1	MARKING LABEL KIT X, 04.841.4550.0	
170	359005-0010		1	MARKING LABEL KIT 0 - 9, 04.841.2150.0	
220	1361560-0000		1	PLATE	
230	312132-0289		4	SLOTTED HEAD, PAN SCREW, MSCS M4X10	
240	90062-0029		4	LOCK WASHER 5,1X 8,6, T= 1,5 DIN 7980	
250	90166-0118	MM	500	TUBE 8 MM PA BLACK	
310	342931-0121		1	ELBOW 90 COUPL.,EXT.THREAD 8/6-G1/8"	
340	2531423-0000		5	NUT	
350	2531245-0000		5	HOSE NIPPLE	
360	2532574-0000		1	COVER	
B2540	90274-0108		1	DUAL PRESSURE GUARD, -20 - 2800 KPA	
W2252	351150-0431	MM	1000	CABLE OLFLEX 2X0,75 MM2 LIGHT/GREY	

Machine Type	Group Description	Used-In	Group Number	Page No

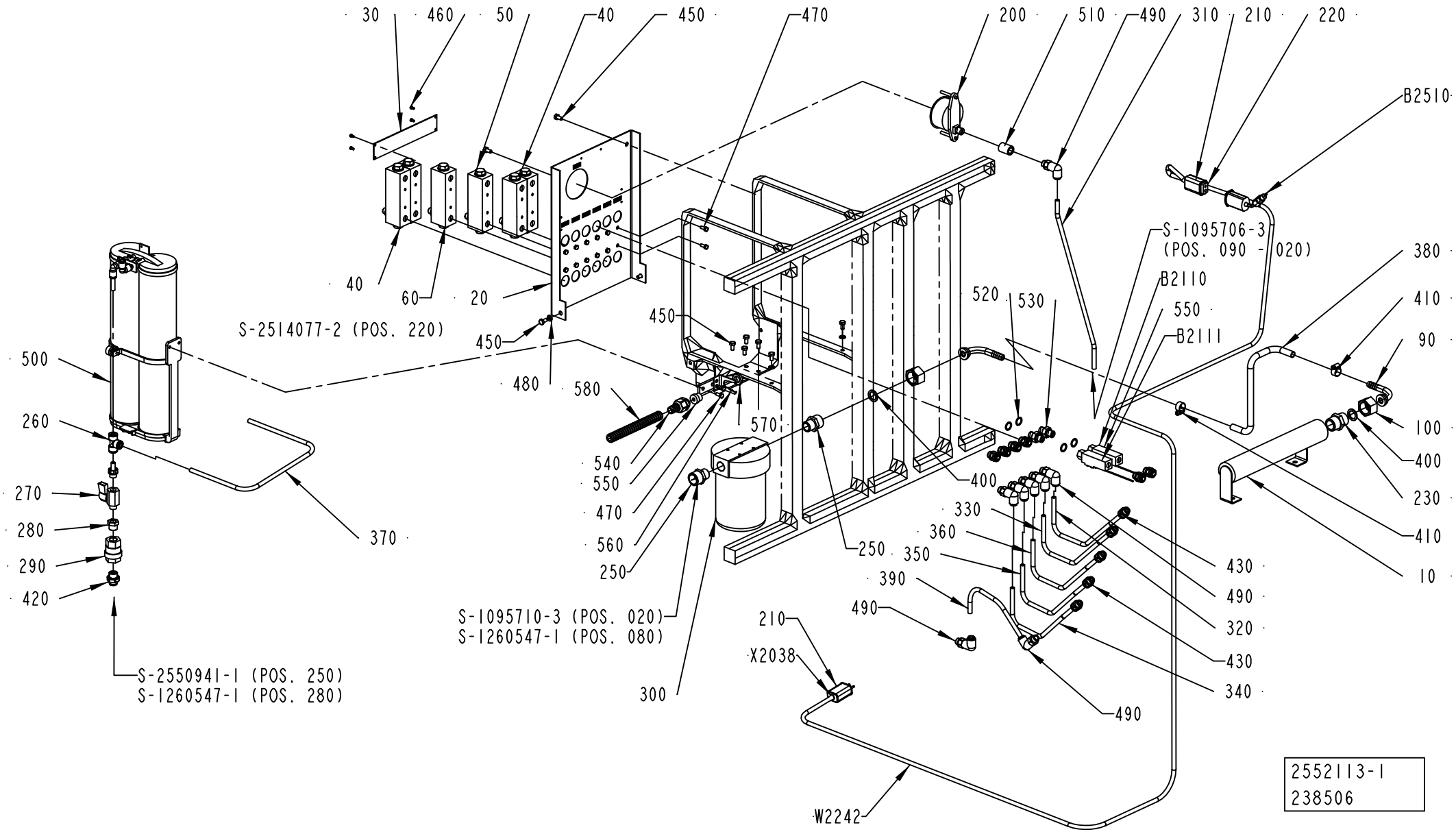
30
460
50
40
450
470
200
510
490
310
210
220
B2510
S-1095706-3
(POS. 090 - 020)
380
410
90
100
400
230
410
10
B2110
550
B2111
520
530
40
60
20
S-2514077-2 (POS. 220)
450
450
480
580
500
260
270
280
290
420
370
540
550
470
560
250
570
400
250
330
360
350
390
490
430
490
320
430
340
490
S-1095710-3 (POS. 020)
S-1260547-1 (POS. 080)
300
210
X2038
W2242
S-2550941-1 (POS. 250)
S-1260547-1 (POS. 280)
2552113-1
238506

ECM: 383504 - 20090115
Group number: 2552113-0100
Assembly Drawing: 2552113-1_1_AD

Pos	Part No	UN	Qty	Description	Page No
A3/FLEX					
020	2579861-0003		1	PIVOT BRACKET	
030	2547474-0000		1	SIGN LANGUAGE INDEPENDENT	
040	1129079-0000		4	FLOW METER	
050	1041046-0000		1	FLOW METER	
060	1129079-0000		1	FLOW METER	
320	90166-0118	MM	255	TUBE 8 MM PA BLACK	
330	90166-0118	MM	255	TUBE 8 MM PA BLACK	
430	90055-0274		11	STRAIGHT COUPLING, D=8 MM - G1/4"	
450	312105-0366		10	SCREW M6S ISO 4017 M6X12 A480	
470	312105-0327		14	SCREW M6S ISO 4017 M5X12 A480	
490	90055-0267		8	ELBOW PIPE JOINT,EXT.THREAD,D=8 MM G1/4	
520	315233-0110		4	WASHER CAPTIVE SEALING G1/4	
530	90055-0042		2	NIPPLES, EXT. THREAD, HEXAGON, NO. 6835-	
540	353242-0005		1	HOSE GLAND W/O INSERT PG9 NORMAL	
550	353249-0067		1	INSERT, SINGLE HOLE, E150/7	
560	977527-0000		1	BRACKET	
570	90099-0104		1	NUT, PR 15,2 (PG9)	
580	90152-0058	M	1	SPIRAL CONDUIT, 15X9, UL 0909	
B2110	90459-0180		1	FLOW SWITCH, 0,1 - 2,5 L/MIN	
B2111	90459-0180		1	FLOW SWITCH, 0,1 - 2,5 L/MIN	
Common Parts					
010	1041984-0000		1	ATTACHMENT PIPE	
090	2531245-0000		2	HOSE NIPPLE	
100	2531423-0000		2	NUT	
200	90043-0100		1	PRESSURE GAUGE, 2948 D=63 MM	
210	90326-0012		2	PROTECTIVE COVER, T31A4618	
220	90326-0020		1	PLUG, FEMALE YELLOW CR-AL	
230	90330-0004		1	NIPPLES,HEXAGON,EXT.R-THREAD R3/4"-R3/4"	
250	90358-0091		2	REDUCING NIPPLE	
260	90055-0276		1	T-CONNECTION 8 MM	
270	90187-0045		1	BALL VALVE G1/4 CR PL	
280	90330-0042		1	BUSHING, INT/EXT. THR. R3/8-RP1/4	
290	90230-0028		1	NON-RETURN VALVE H 151 R 3/8"	
300	90415-0065		1	FILTER	
010	*90415-0357*		*1*	*FILTER INSERT*	
310	90166-0118	MM	490	TUBE 8 MM PA BLACK	
340	90166-0118	MM	255	TUBE 8 MM PA BLACK	
350	90166-0118	MM	255	TUBE 8 MM PA BLACK	
360	90166-0118	MM	255	TUBE 8 MM PA BLACK	
370	90166-0118	MM	800	TUBE 8 MM PA BLACK	
380	90166-0121	MM	400	HOSE	
390	90166-0118	MM	700	TUBE 8 MM PA BLACK	
400	315229-0102		2	GASKETS, 16,8X23,8X3,7 MM 3/4" FDA	
410	342991-0101		2	HOSE CLIP,WORM DRIVE TYPE (13)-16	
420	90458-1963		1	STRAIGHT COUPLING D=8-G3/8"	
460	312125-0220		4	SCREW ISO 1207 M3X6 A4	
480	315105-0153		4	WASHER BRB 6,4X12 RFR	
500	2792119-0100		1	FILTER	**7-21**
510	90330-0102		1	SLEEVE, INT, THREAD, NO., R-201R1/4	
B2510	90326-0057		1	THERMOCOUPLE, CR-AL	
W2242	90220-0034	MM	3700	THERMOCABLE TEX/SITW-20F-KX 2X0,5MM2	
X2038	90326-0022		1	PLUG, MALE YELLOW CR-AL	

Machine Type	Group Description	Used-In	Group Number	Page No

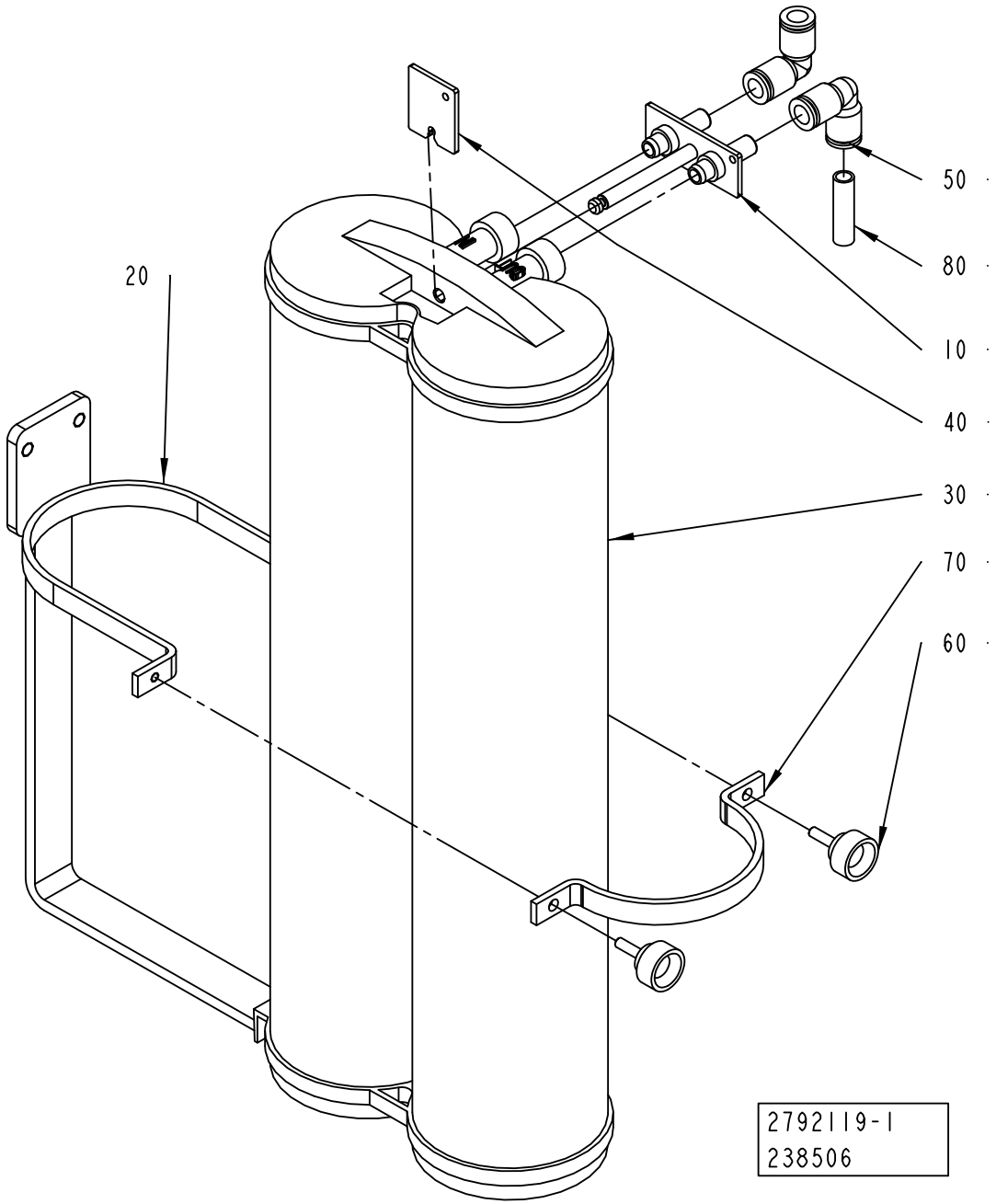
50
80
10
40
30
70
60
20
2792119-1
238506

ECM: 339617 - 20090402
Group number: 2792119-0100
Assembly Drawing: 2792119-1_1_AA

Pos	Part No	UN	Qty	Description	Page No
-					
010	2793908-0000		1	CONNECTOR	
020	2792118-0000		1	SUPPORT	
030	90459-7084		1	FILTER, CPDI0NJM1	
040	2793907-0000		1	FASTENING PLATE	
050	342735-0103		2	ELBOW PIPE JOINT	
060	318856-0101		2	KNOB, EXTERNAL THREAD. NO. 8308-1011	
070	2792120-0000		1	SUPPORT	
080	90166-0118	MM	200	TUBE 8 MM PA BLACK	

Pos	Part No	UN	Qty	Description	Page No

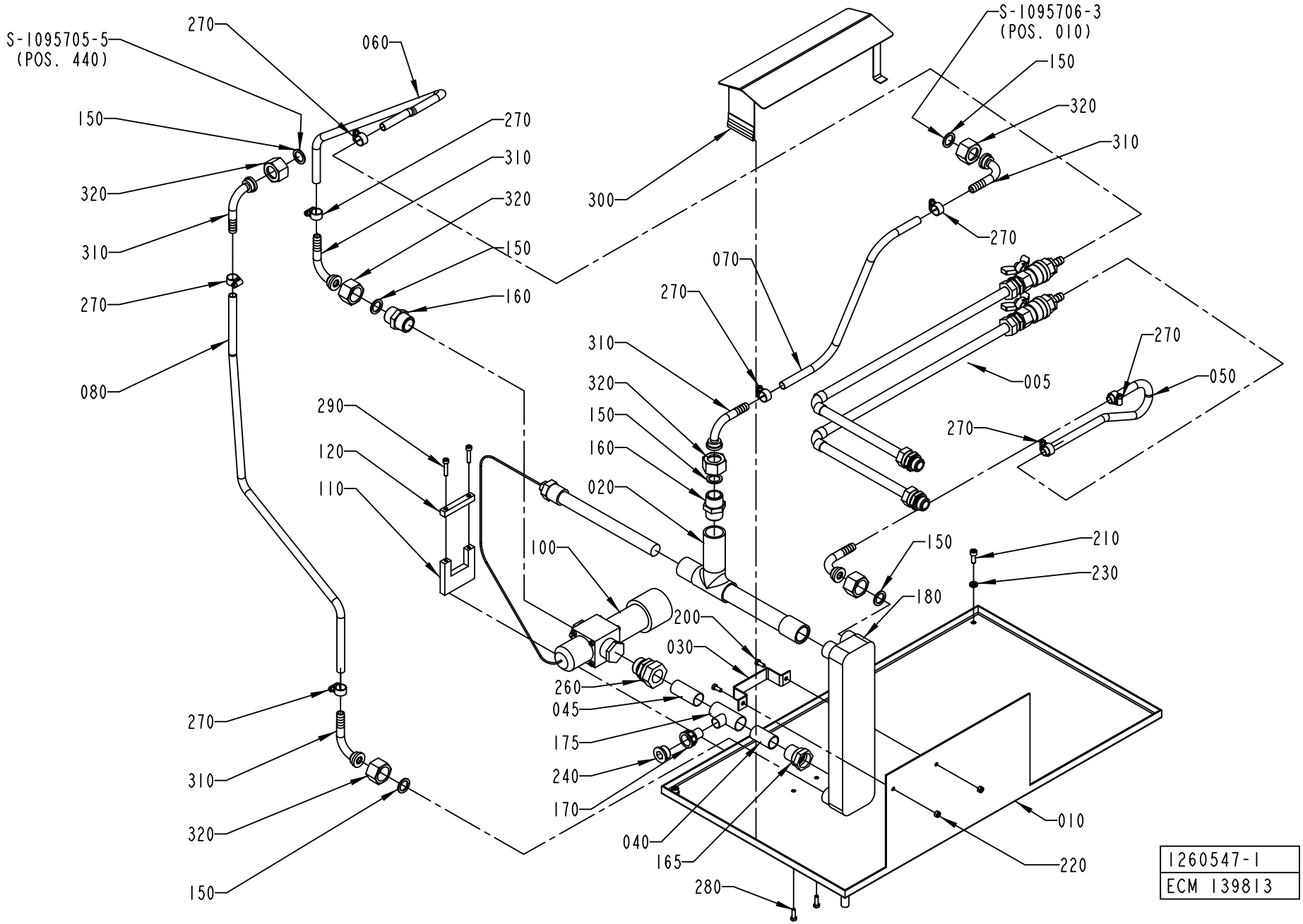
S-1095705-5
(POS. 440)
270
060
150
320
310
270
080
270
310
320
150
160
300
S-1095706-3
(POS. 010)
150
320
310
270
070
270
310
320
150
160
020
005
270
050
270
290
120
110
100
150
210
230
180
200
030
260
045
175
240
170
040
165
280
270
310
320
150
010
220
1260547-1
ECM 139813

ECM: 189412 - 20041104
Group number: 1260547-0100
Assembly Drawing: 1260547-1_1_AG

Pos	Part No	UN	Qty	Description	Page No
-					
005	1095715-0100		1	ICE WATER	**7-25**
010	1255365-0000		1	MOUNTING PLATE	
020	1511680-0000		1	TUBE	
030	1260247-0000		1	CLIP	
040	1260327-0000		1	TUBE	
045	1285363-0000		1	TUBE	
050	90166-0121	MM	400	HOSE	
060	90166-0121	MM	550	HOSE	
070	90166-0121	MM	600	HOSE	
080	90166-0121	MM	850	HOSE	
100	90187-0130		1	TEMP. CONTR. VALVE, R3/4 0-30øC	
110	1511615-0000		1	BRACKET	
120	1511616-0000		1	BRACKET	
150	90459-3339		6	GASKET NBR/PTFE 17X24X2 MM 3/4"	
160	90330-0004		2	NIPPLES,HEXAGON,EXT.R-THREAD R3/4"-R3/4"	
165	90418-0045		1	ADAPTER-22-G3/4", INT.CONN. NO.2009140	
170	90418-0057		1	ADAPTER, EXT. CONN.,15-G1/2, NO.2008662	
175	90418-0062		1	T-PIPE, REDUCTION, INT,22X15X22, 2001042	
180	90422-0037		1	HEAT EXCHANGER	
200	312105-0327		2	SCREW M6S ISO 4017 M5X12 A480	
210	312105-0368		2	SCREW M6S ISO 4017 M6X16 A480	
220	312605-0314		2	HEXAGON NUT, M6M M5 A280	
230	315115-0153		2	WASHER PLAIN, TBRB 6,4/12 H=3	
240	342713-0213		1	PLUG, EXT THREAD HEX SOCKET 8638-00-120	
260	342720-0119		1	CONN. STR., GA-22-G3/4	
270	342991-0101		8	HOSE CLIP,WORM DRIVE TYPE (13)-16	
280	312105-0329		2	SCREW M6S ISO 4017 M5X16 A480	
290	312115-0333		2	SCREW ISO4762 M5X25 A4 80	
300	2532574-0000		1	COVER	
310	2531245-0000		6	HOSE NIPPLE	
320	2531423-0000		6	NUT	

Pos	Part No	UN	Qty	Description	Page No

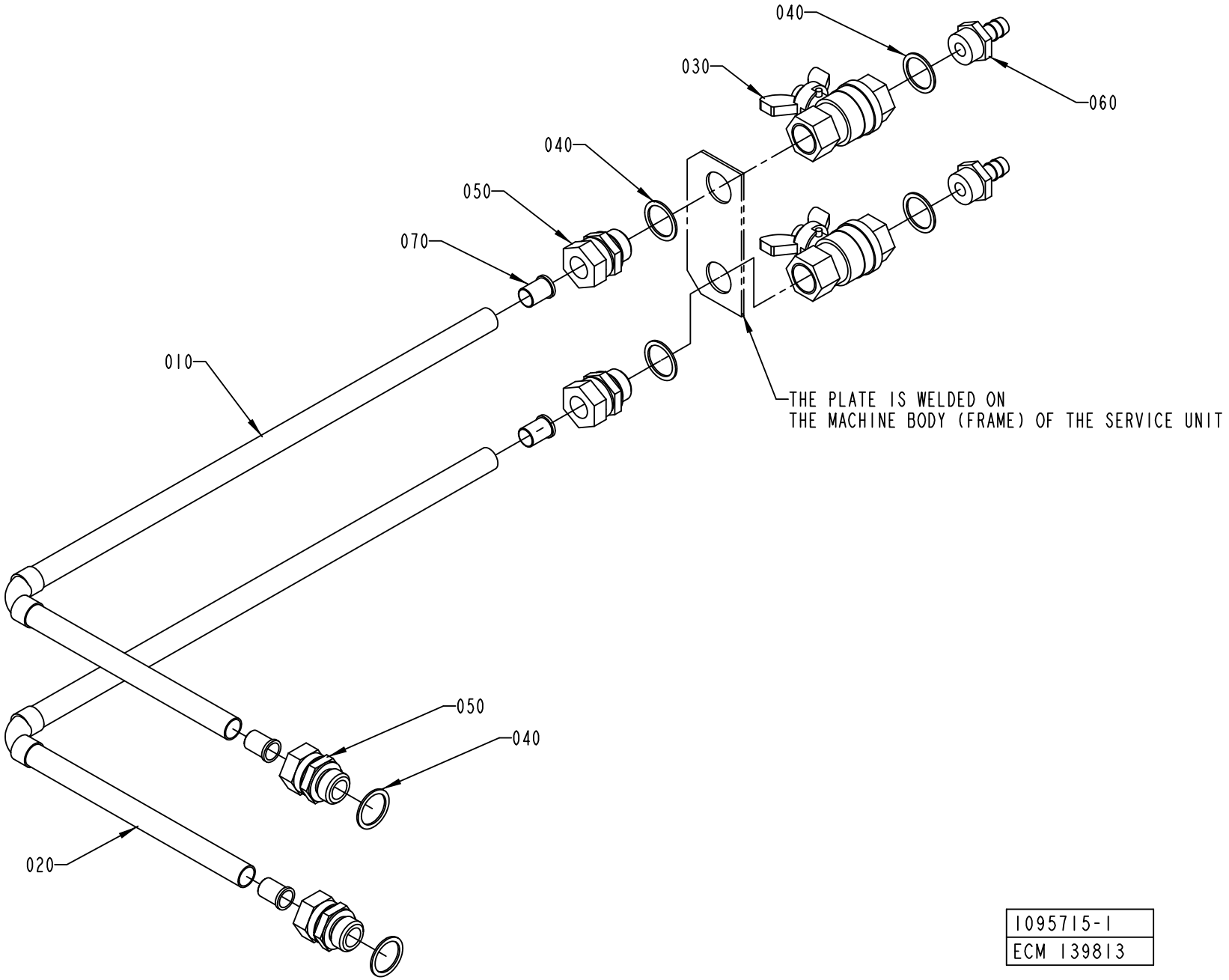

1095715-1
ECM 139813

ECM: 224833 - 20050831
Group number: 1095715-0100
Assembly Drawing: 1095715-1_1_AD

Pos	Part No	UN	Qty	Description	Page No
-					
010	1041930-0000		1	PIPE	
020	1041931-0000		1	PIPE	
030	90187-0029		2	BALL VALVE G1/2, NPBR	
040	315233-0113		6	WASHER CAPTIVE SEALING G1/2	
050	342720-0114		4	CONN. STR. GA-15-G1/2	
060	342901-0105		2	HOSE NIPPLE, EXT.THR. R1/2-12 MM	
070	342708-0109		4	REINFORCING RING VSH 15X1 MM	

Pos	Part No	UN	Qty	Description	Page No

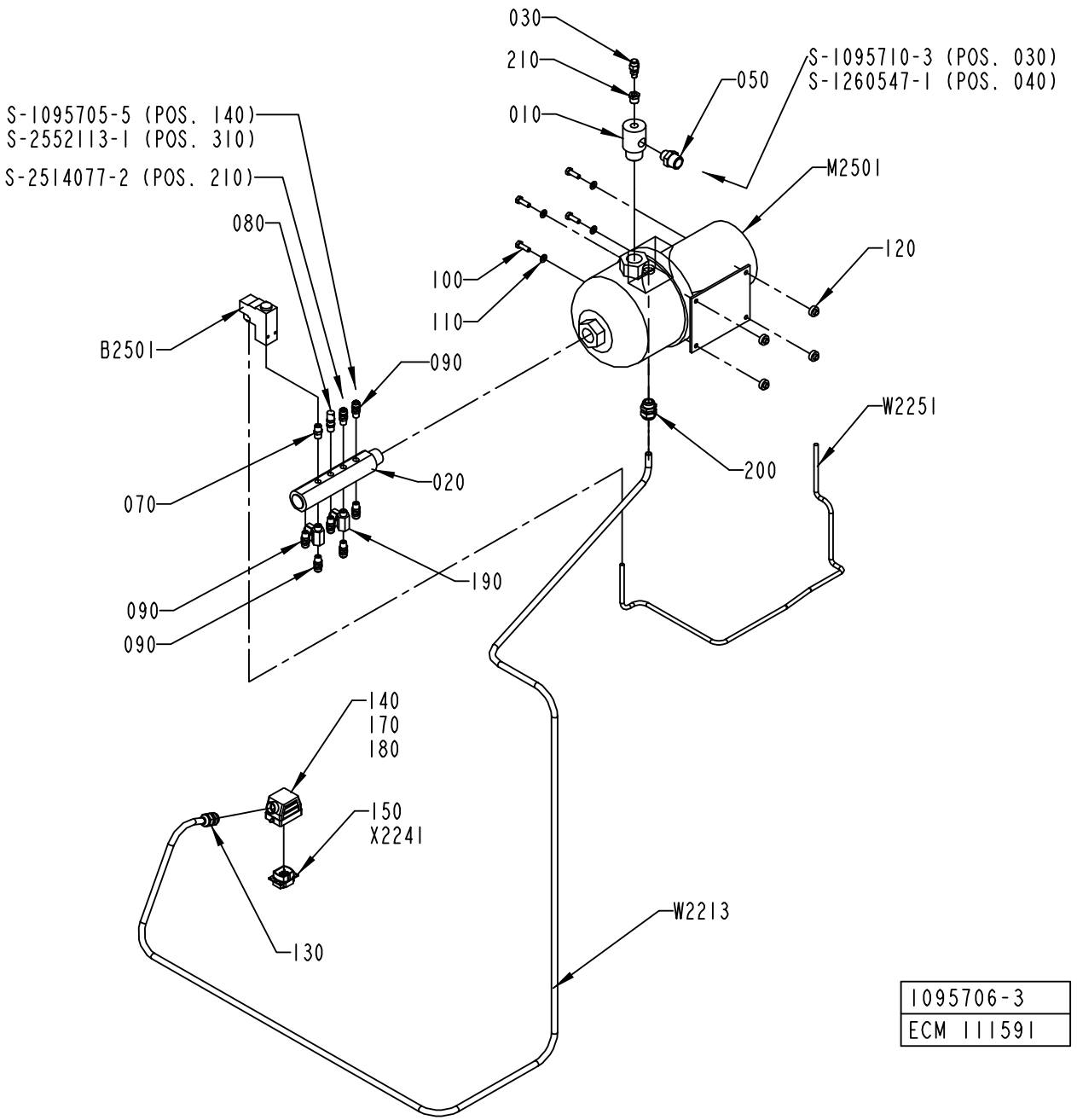
030
210
010
050
S-1095710-3 (POS. 030)
S-1260547-1 (POS. 040)
S-1095705-5 (POS. 140)
S-2552113-1 (POS. 310)
S-2514077-2 (POS. 210)
080
M2501
120
100
110
B2501
090
W2251
200
020
070
190
090
090
140
170
180
150
X2241
130
W2213
1095706-3
ECM 111591

ECM: 224832 - 20050831
Group number: 1095706-0300
Assembly Drawing: 1095706-3_1_AD

Pos	Part No	UN	Qty	Description	Page No
A3/FLEX					
090	90055-0274		7	STRAIGHT COUPLING, D=8 MM - G1/4"	
190	90187-0045		2	BALL VALVE G1/4 CR PL	
220	90330-0026		1	PLUG, EXT. G-THREAD, G1/4	
W 2213	351150-0418	MM	3500	CABLE OLFLEX 4X2,5 MM2 LIGHT/GREY	
Common Parts					
010	2532806-0000		1	ATTACHMENT PIPE	
020	1129066-0000		1	RETURN PIPE	
030	90459-1736		1	PURGE VALVE, 2RM-PG4L-SS	
050	90330-0080		1	NIPPLES, EXT. THREAD. R3/4-R1/2	
070	90330-0043		1	NIPPLES, EXT. THREAD. R-207R1/4	
080	90230-0041		1	OVERPRESSURE VALVE SS-4 CPA2-RTDG-3	
100	312105-0453		4	SCREW M6S ISO 4017 M8X25 A480	
110	315105-0165		4	WASHER BRB 8,4X16 RFR	
120	90015-0037		4	RUBBER BUSHING	
130	352103-0108		1	CABLE GLAND, ST 13,5 , PR20,4/PG13,5	
140	90110-0226		1	CABLE HOOD 6-POL 70.350.0628.0	
150	90110-0159		1	MALE INSERT 70.310.0640.0	
170	359005-0050		1	MARKING LABEL KIT X, 04.841.4550.0	
180	359005-0010		1	MARKING LABEL KIT 0 - 9, 04.841.2150.0	
200	352103-0110		1	CABLE GLAND, STR 16, PR22,5/PG16	
210	342701-0202		1	BUSHING,INT./EXT.G-THREAD G3/8"-G1/8"	
B 2501	90274-0056		1	PRESS.SWITCH 1-12BAR, PEV-1/4-B-SA22358	
M 2501	90321-0116		1	PUMP GRUNDFOS CHI 2-60	
	90321-0618		*1*	*SEAL KIT FOR REPAIR OF PUMP*	
W 2251	351150-0431	MM	1000	CABLE OLFLEX 2X0,75 MM2 LIGHT/GREY	

Pos	Part No	UN	Qty	Description	Page No

Machine Type | Group Description | Used-In | Group Number | Page No

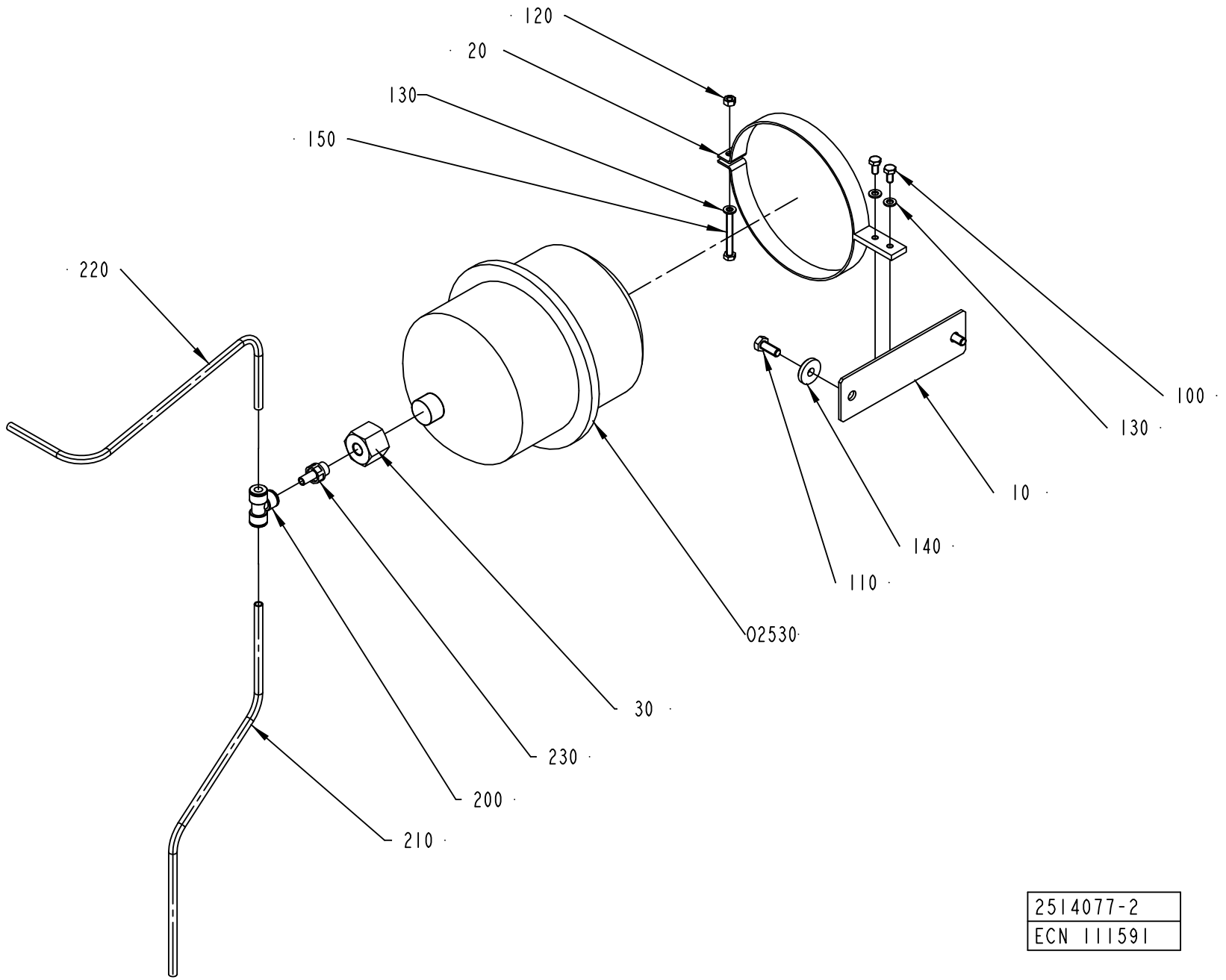

2514077-2
ECN 111591

ECM: 189417 - 20041104
Group number: 2514077-0100
Assembly Drawing: 2514077-2_1_AA

Pos	Part No	UN	Qty	Description	Page No
A3/FLEX					
200	90055-0276		1	T-CONNECTION 8 MM	
230	90055-0260		1	NIPPLE-8 MM G1/4"	
Common Parts					
010	2514087-0000		1	PLATE	
020	1484081-0000		1	BRACKET	
030	2514083-0000		1	REDUCTION NIPPLE	
100	312105-0366		2	SCREW M6S ISO 4017 M6X12 A480	
110	312105-0451		2	SCREW M6S ISO 4017 M8X20 A480	
120	312605-0316		1	HEXAGON NUT, M6M M6 A280	
130	315105-0153		3	WASHER BRB 6,4X12 RFR	
140	315125-0165		2	WASHER TBRSB 8,4X26X5 A4	
150	312109-0380		1	SCREW M6S ISO 4017 M6X50 A480	
210	90166-0118	MM	450	TUBE 8 MM PA BLACK	
220	90166-0118	MM	500	TUBE 8 MM PA BLACK	
O2530	90304-0020		1	RECIPIENTE	

Pos	Part No	UN	Qty	Description	Page No

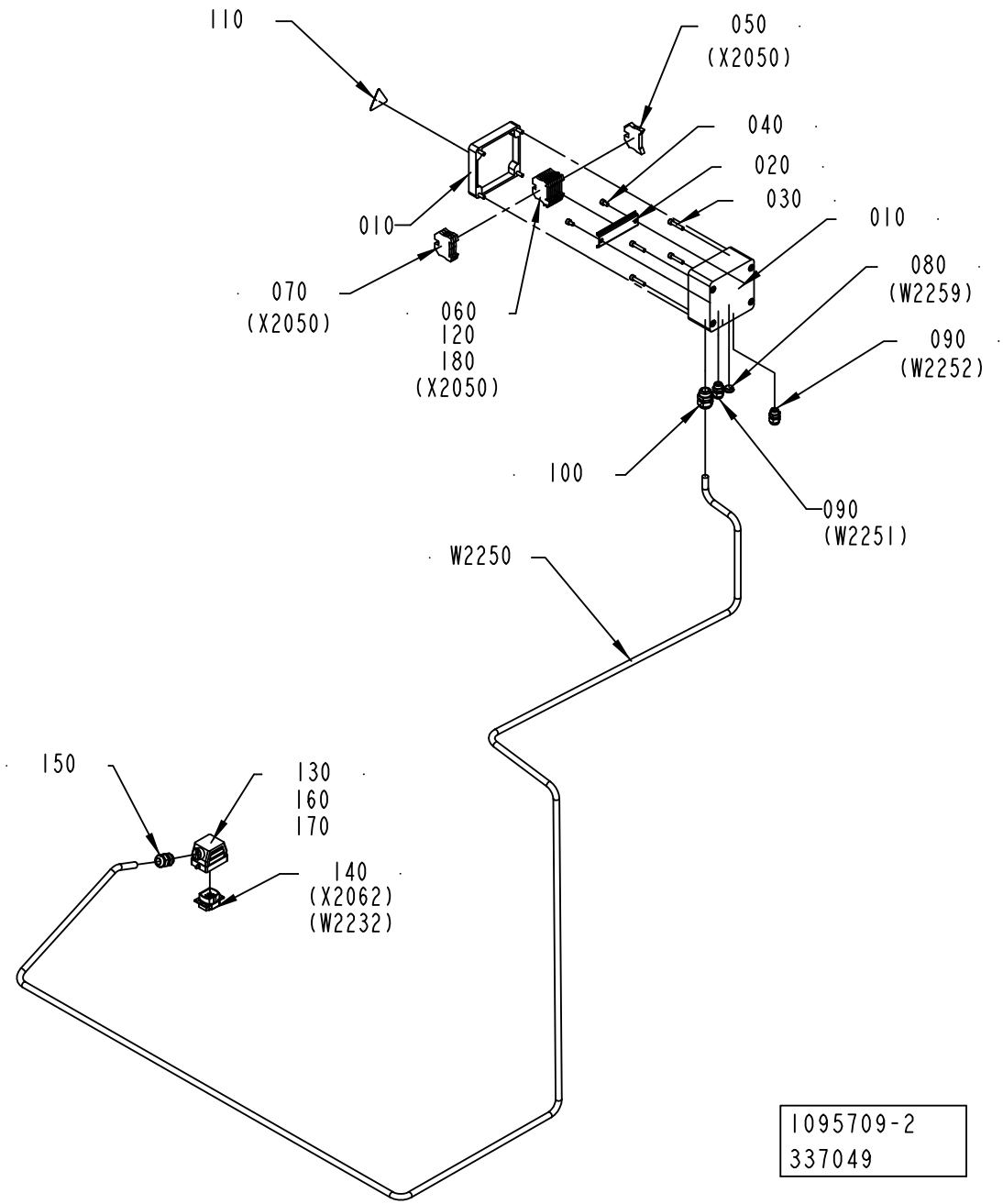
110
050
(X2050)
040
020
030
010
010
080
(W2259)
070
(X2050)
060
120
180
(X2050)
090
(W2252)
100
090
(W2251)
W2250
150
130
160
170
140
(X2062)
(W2232)
1095709-2
337049

ECM: 340134 - 20080124
Group number: 1095709-0200
Assembly Drawing: 1095709-2_1_AD

Pos	Part No	UN	Qty	Description	Page No
A3/FLEX					
W2250	351150-0406	MM	4000	CABLE OLFLEX 7X0,75 MM2 LIGHT/GREY	
Common Parts					
010	1041943-0000		1	CONNECTION BOX	
020	1129210-0000		1	MOUNTING RAIL	
030	312115-0374		4	SCREW ISO4762 M6X30 A4 80	
040	312115-0364		2	SCREW ISO4762 M6X10 A4 80	
050	353031-0203		1	END SUPPORT, WEW 35/2	
060	353021-0216		8	FEED THROUGH TERMINAL, 10200.8	
070	353024-0205		3	EARTH TERMINAL, 1010.1	
080	90002-0013		2	BLANK-OFF PLUG, PR 15,2 SKINDICHT-BLK9	
090	352103-0101		2	CABLE GLAND, ST 9, PR15,2/PG9	
100	352103-0110		1	CABLE GLAND, STR 16, PR22,5/PG16	
110	359705-0015		1	WARNING SIGN ISO, RISK OF ELECTRIC SHOCK	
120	359011-0809		1	MARKING PLATES 5-FW 101-150	
130	90110-0226		1	CABLE HOOD 6-POL 70.350.0628.0	
140	90110-0159		1	MALE INSERT 70.310.0640.0	
150	352103-0108		1	CABLE GLAND, ST 13,5 , PR20,4/PG13,5	
160	359005-0050		1	MARKING LABEL KIT X, 04.841.4550.0	
170	359005-0010		1	MARKING LABEL KIT 0 - 9, 04.841.2150.0	
180	353034-0030		1	BRIDGE CONNECTOR WQV 2,5/10, 10544.6	

Pos	Part No	UN	Qty	Description	Page No

FOAM CLEANING UNIT

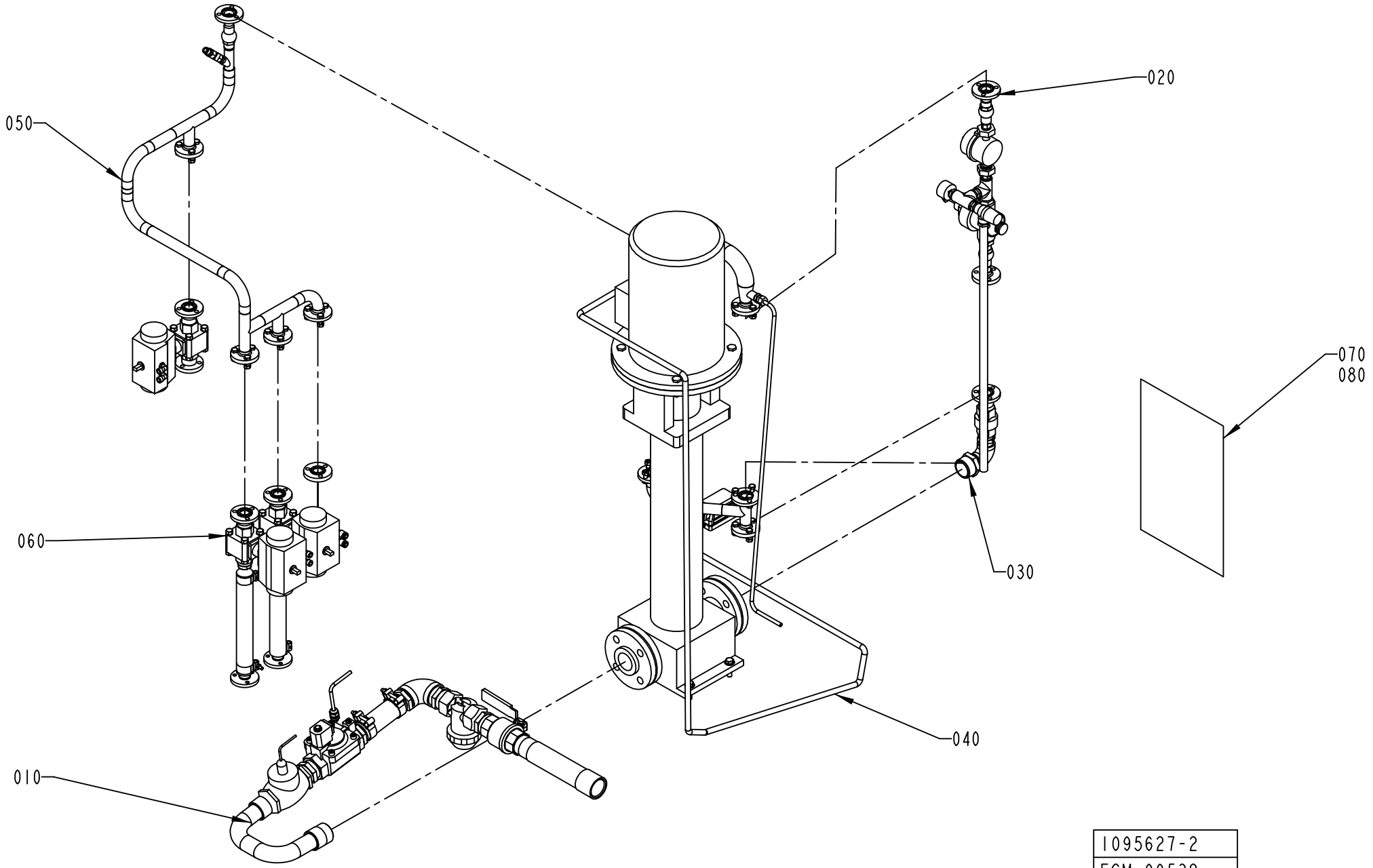

ECM: 139558 - 20030711
Group number: 1095627-0300
Assembly Drawing: 1095627-2_1_AB

Pos	Part No	UN	Qty	Description	Page No
A3/FLEX 50HZ					
080	2512821-0000		1	EXTERNAL CLEANING DIAGRAM	
A3/FLEX 60HZ					
080	2512821-0000		1	EXTERNAL CLEANING DIAGRAM	
Common Parts					
010	1095672-0100		1	PIPE	**7-35**
020	1095673-0100		1	SIDE	**7-37**
030	1095675-0100		1	PIPE	**7-39**
040	1095676-0100		1	PUMP	**7-41, 7-43**
050	1095677-0100		1	BRANCHING PIPE	**7-45**
060	1095678-0300		1	BALL VALVE	**7-47**

Pos	Part No	UN	Qty	Description	Page No

Machine Type | Group Description | Used-In | Group Number | Page No

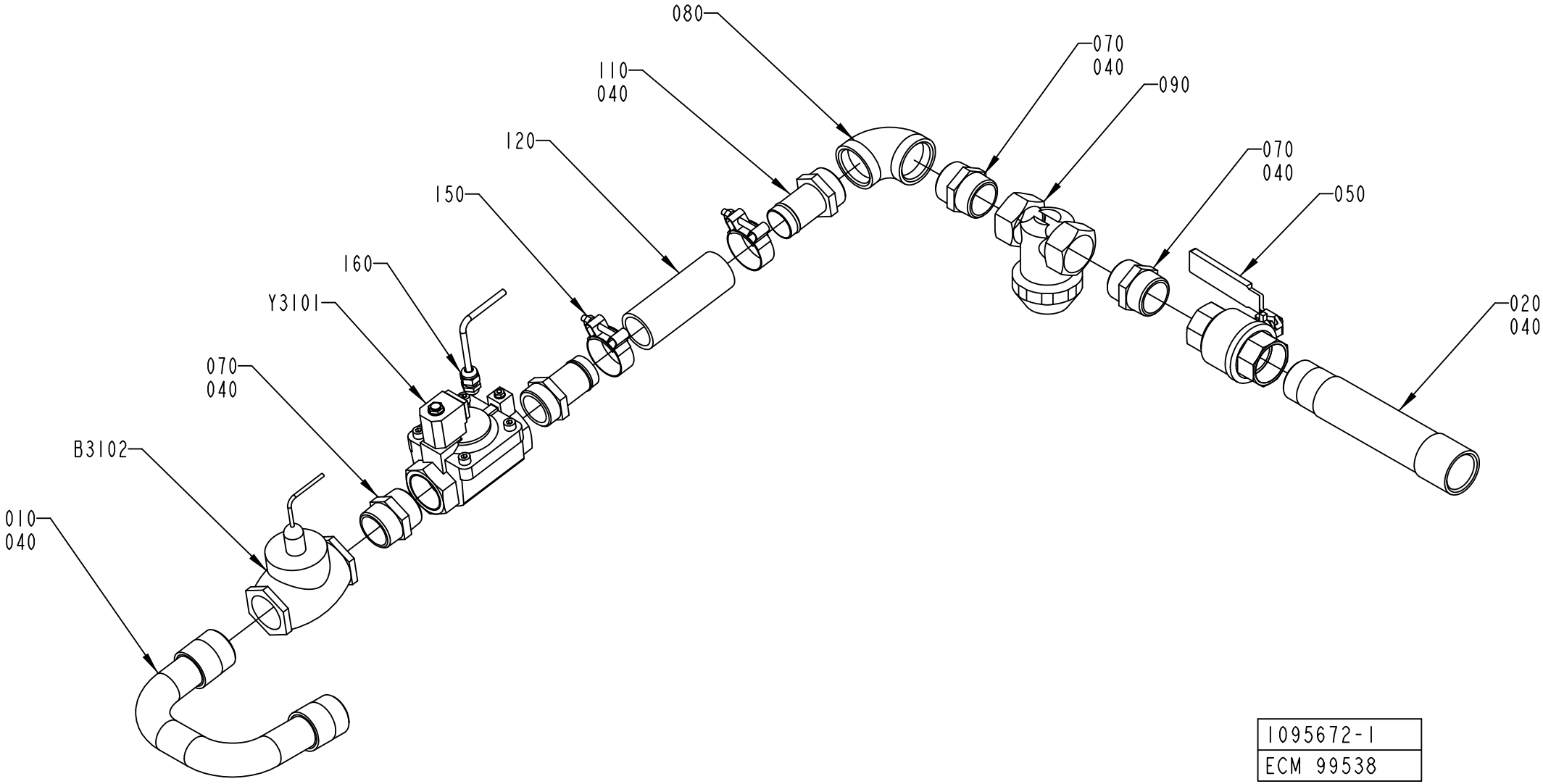
080
070
040
110
040
090
120
070
040
150
050
160
Y3101
020
040
070
040
B3102
010
040
1095672-1
ECM 99538

ECM: 224829 - 20050831
Group number: 1095672-0100
Assembly Drawing: 1095672-1_1_AD

Pos	Part No	UN	Qty	Description	Page No
-					
010	1041925-0000		1	PIPE	
020	1041926-0000		1	PIPE	
040	90144-0007	MM	1	TAPE	
050	90187-0147		1	BALL VALVE G11/2	
070	90330-0056		3	NIPPLES, EXT. THREAD. R-207 KR11/2	
080	90330-0057		1	ELBOW, 90 INT. THREAD, R-222R11/2	
090	90415-0032		1	FILTER / 3-02-00-1 1/2"	
	90415-0328		*1*	*FILTER INSERT*	
110	90055-0166		2	HOSE NIPPLE, EXT.THR. R11/2X38 MM	
120	90166-0236	MM	150	HOSE, 38/51 REINFORCED RUBBER	
150	90458-2850		2	HOSE CLIP , 51 MM	
160	352103-0101		1	CABLE GLAND, ST 9, PR15,2/PG9	
B3102	90274-0082		1	FLOW SWITCH, 2 - 3 L/MIN	
	90274-0322		*1*	*SPARE PART KIT*	
W2222	351150-0403	M	2	CABLE OLFLEX 3X0,75 MM2 LIGHT/GREY	
Y3101	90042-0254		1	SOLENOID DIAPHRAGM VALVE, R1 1/2	
	90042-0557		*1*	*COIL V24DC-N3*	
	90458-2575		*1*	*DIAPHRAGM, R450466/B FOR 90042-0254*	

Pos	Part No	UN	Qty	Description	Page No

Machine Type | Group Description | Used-In | Group Number | Page No

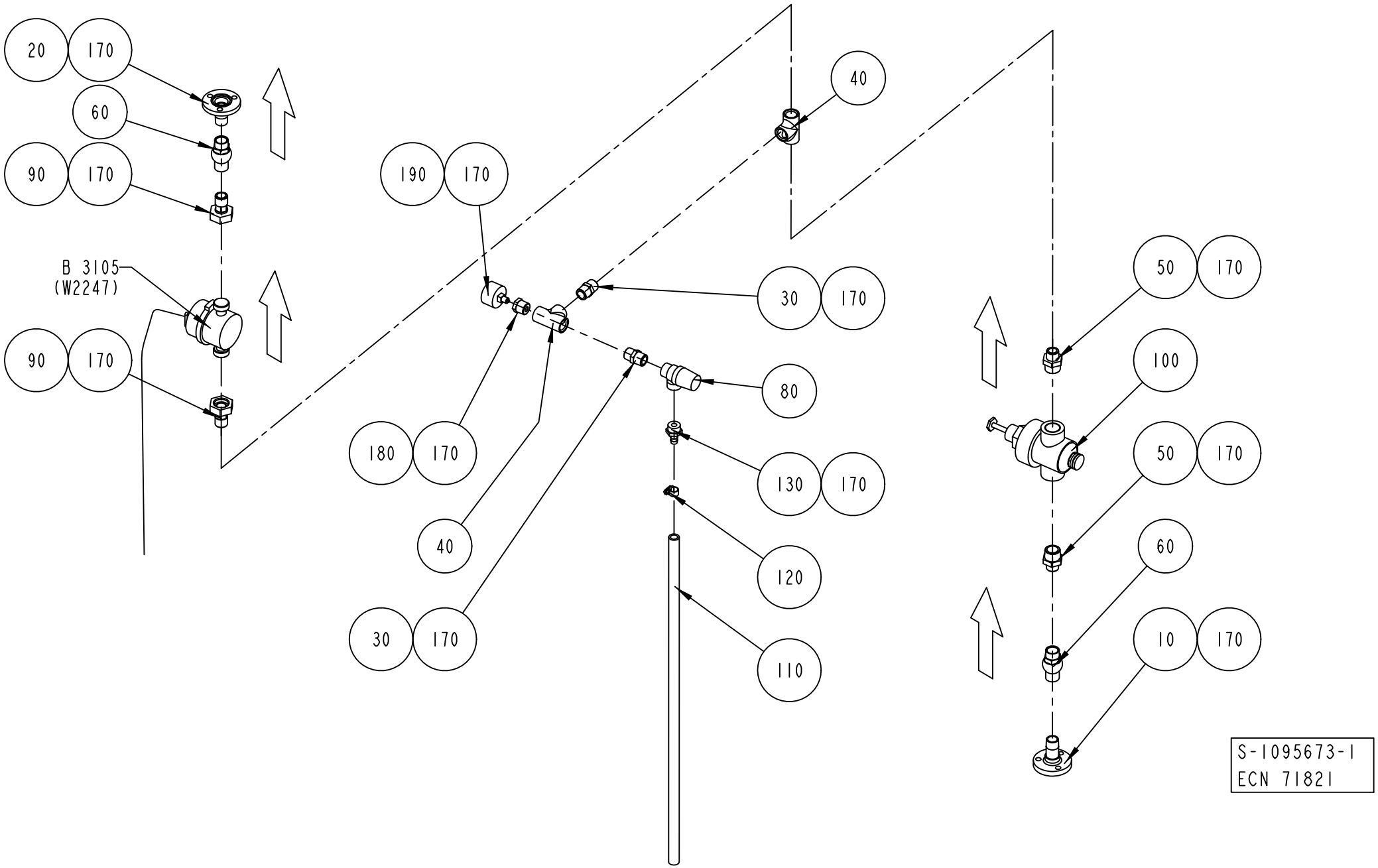
20
170
60
90
170
B 3105
(W2247)
90
170
190
170
40
30
170
80
180
170
130
170
40
120
30
170
110
50
170
100
50
170
60
10
170
S-1095673-1
ECN 71821

ECM: 224830 - 20050831
Group number: 1095673-0100
Assembly Drawing: 1095673-1_1_AD

Pos	Part No	UN	Qty	Description	Page No
-					
010	1036826-0000		1	PIPE	
020	1036827-0000		1	PIPE	
030	90330-0021		2	NIPPLES, EXT. THREAD. R-207R1/2	
040	90330-0049		2	T-PIPE, INT. THREAD, R-221R1/2	
050	90330-0080		2	NIPPLES, EXT. THREAD. R3/4-R1/2	
060	90230-0042		2	NON-RETURN VALVE 1/2"	
080	90187-0133		1	SAFETY VALVE, 10 BARS, R1/2, R1/2	
090	90030-0465		2	STRAIGHT CONNECTION, MAD DN 15	
	90005-0156		*1*	*WASHER PLAIN ROUND 16/24, H=1,5*	
100	90113-0098		1	PRESSURE REGULATOR	
110	90166-0121	MM	700	HOSE	
120	342991-0100		1	HOSE CLIP,WORM DRIVE TYPE 10-13	
130	342901-0105		1	HOSE NIPPLE, EXT.THR. R1/2-12 MM	
170	90144-0007	MM	1	TAPE	
180	90330-0036		1	BUSHING, INT/EXT. THR. RP1/8-RP1/2	
190	90043-0043		1	PRESSURE GAUGE 0-10 BAR 1/8"	
B3105	90243-0245		1	MEASURING INSTRUMENT	

Pos	Part No	UN	Qty	Description	Page No

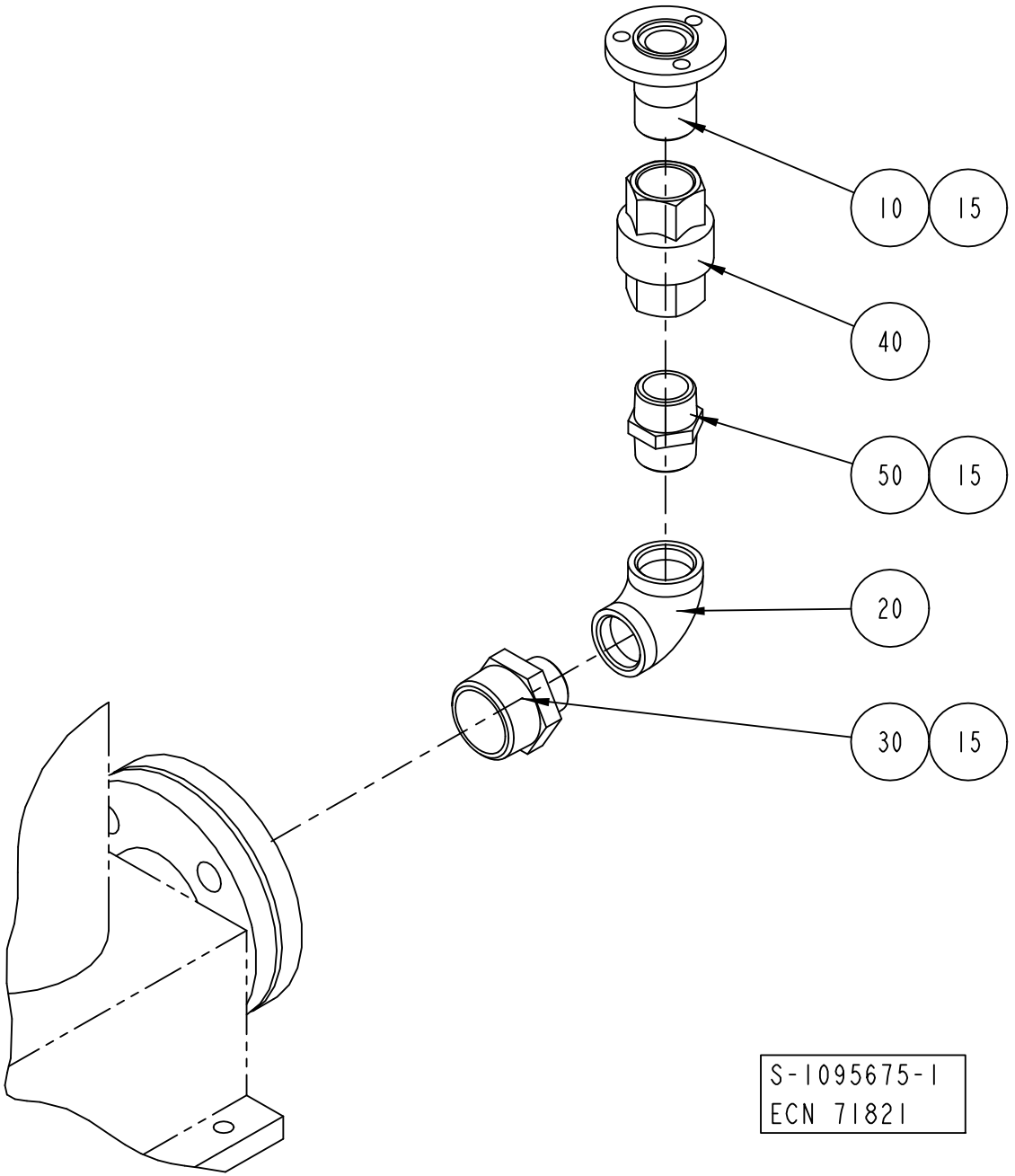
10
15
40
50
15
20
30
15
S-1095675-1
ECN 71821

ECM: 384873 - 20090402
Group number: 1095675-0100
Assembly Drawing: 1095675-1_1_AB

Pos	Part No	UN	Qty	Description	Page No
-					
010	1036794-0000		1	PIPE	
015	90144-0007	MM	1	TAPE	
020	90330-0014		1	ELBOW, 90 INT. THREAD, R-222R1	
030	90330-0045		1	NIPPLES, EXT. THREAD. R-209 KR11/2- KR1	
040	90230-0044		1	NON-RETURN VALVE 1"	
	90230-0308		*1*	*GASKET KIT*	
050	342203-0120		1	NIPPLES, EXT. THREAD, HEXAGON,ÿNO. 209	

Pos	Part No	UN	Qty	Description	Page No

Machine Type | Group Description | Used-In | Group Number | Page No

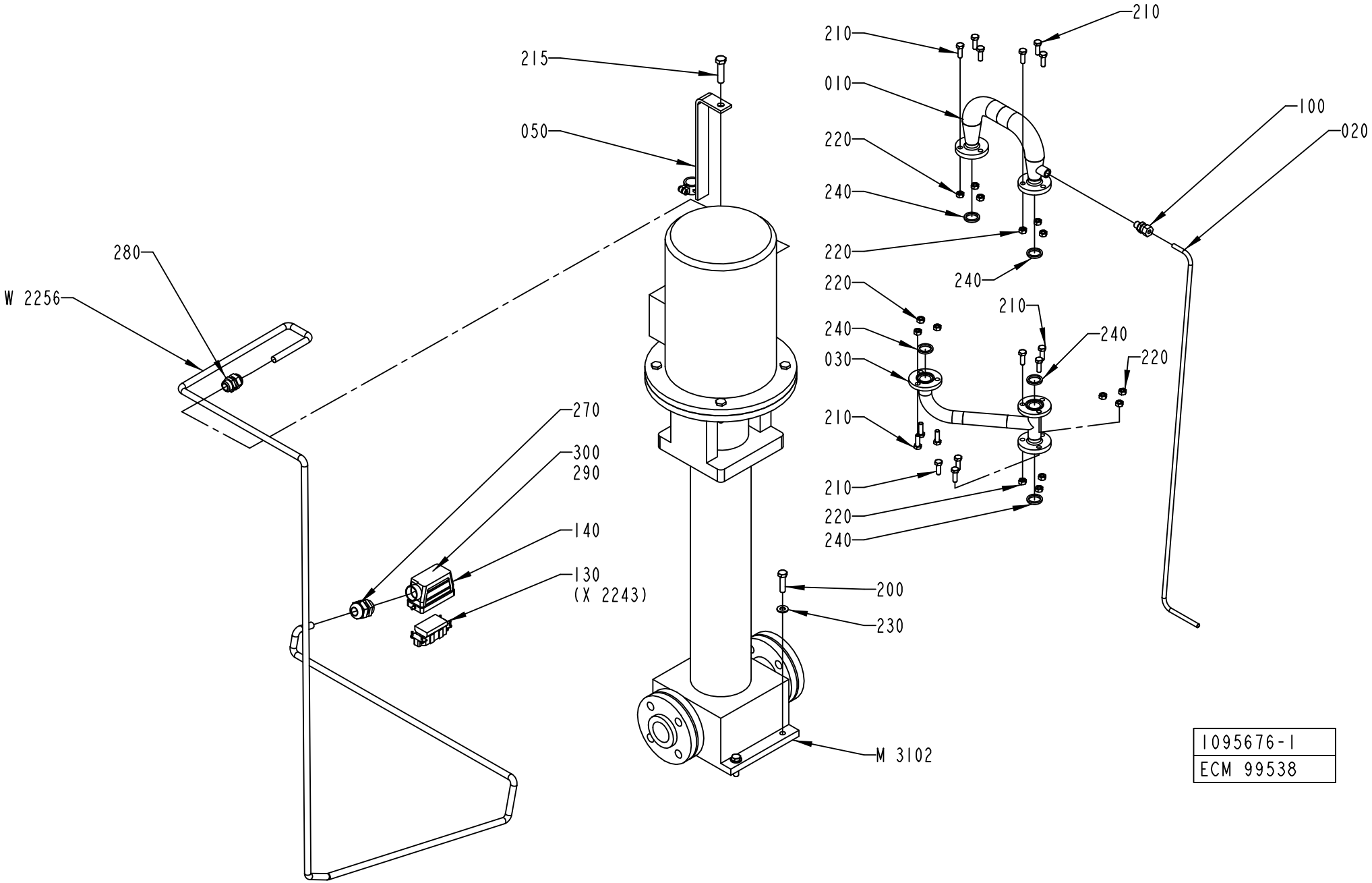
215
050
280
W 2256
270
300
290
140
130
(X 2243)
210
010
220
240
220
240
220
240
030
210
210
220
240
210
240
220
100
020
200
230
M 3102
1095676-1
ECM 99538

ECM: 189422 - 20041104
Group number: 1095676-0100
Assembly Drawing: 1095676-1_1_AC

This list covers pages from 7-40 to 7-43

Pos	Part No	UN	Qty	Description	Page No
A3/FLEX 50HZ (See drawing on page: 7-40)					
020	1140642-0000		1	PIPE	
050	1140670-0000		1	BRACKET	
M3102	90321-0117		1	PUMP LOWARA SV8-14 F75T	
	90321-0593		*1*	*SEAL*	
W2256	351150-0166	MM	4000	CABLE OLFLEX 4X4 MM2 LIGHT/GREY	
A3/FLEX 60HZ (See drawing on page: 7-42)					
020	1140642-0000		1	PIPE	
050	1499786-0000		1	BRACKET	
M3102	90321-0120		1	PUMP SV8-09 F756T, 380V60HZ	
	90321-0593		*1*	*SEAL*	
W2256	351150-0166	MM	4000	CABLE OLFLEX 4X4 MM2 LIGHT/GREY	
Common Parts					
010	1036828-0000		1	TANK	
030	1041946-0000		1	PIPE	
100	90030-0185		1	CONN. STR. GE08LRED71	
130	90110-0156		1	MALE INSERT 70.210.0653.0	
140	90110-0227		1	CABLE HOOD 6-16-POL 71.350.1628.0	
200	312105-0499		4	SCREW M6S ISO 4014 M10X40 A480	
210	312105-0453		15	SCREW M6S ISO 4017 M8X25 A480	
215	312105-0542		1	SCREW M6S ISO 4014 M12X50 A480	
220	312605-0318		15	HEXAGON NUT, M6M M8 A280	
230	315105-0173		4	WASHER BRB 10,5X22 RFR	
240	315229-0103		5	GASKETS, 23,1X30,1X3,7 MM 1" FDA	
270	352103-0115		1	CABLE GLAND, STR 21, PR28,3/PG21	
280	352103-0111		1	CABLE GLAND, ST 16, PR22,5/PG16	
290	359005-0010		2	MARKING LABEL KIT 0 - 9, 04.841.2150.0	
300	359005-0050		1	MARKING LABEL KIT X, 04.841.4550.0	

Pos	Part No	UN	Qty	Description	Page No

Machine Type | Group Description | Used-In | Group Number | Page No

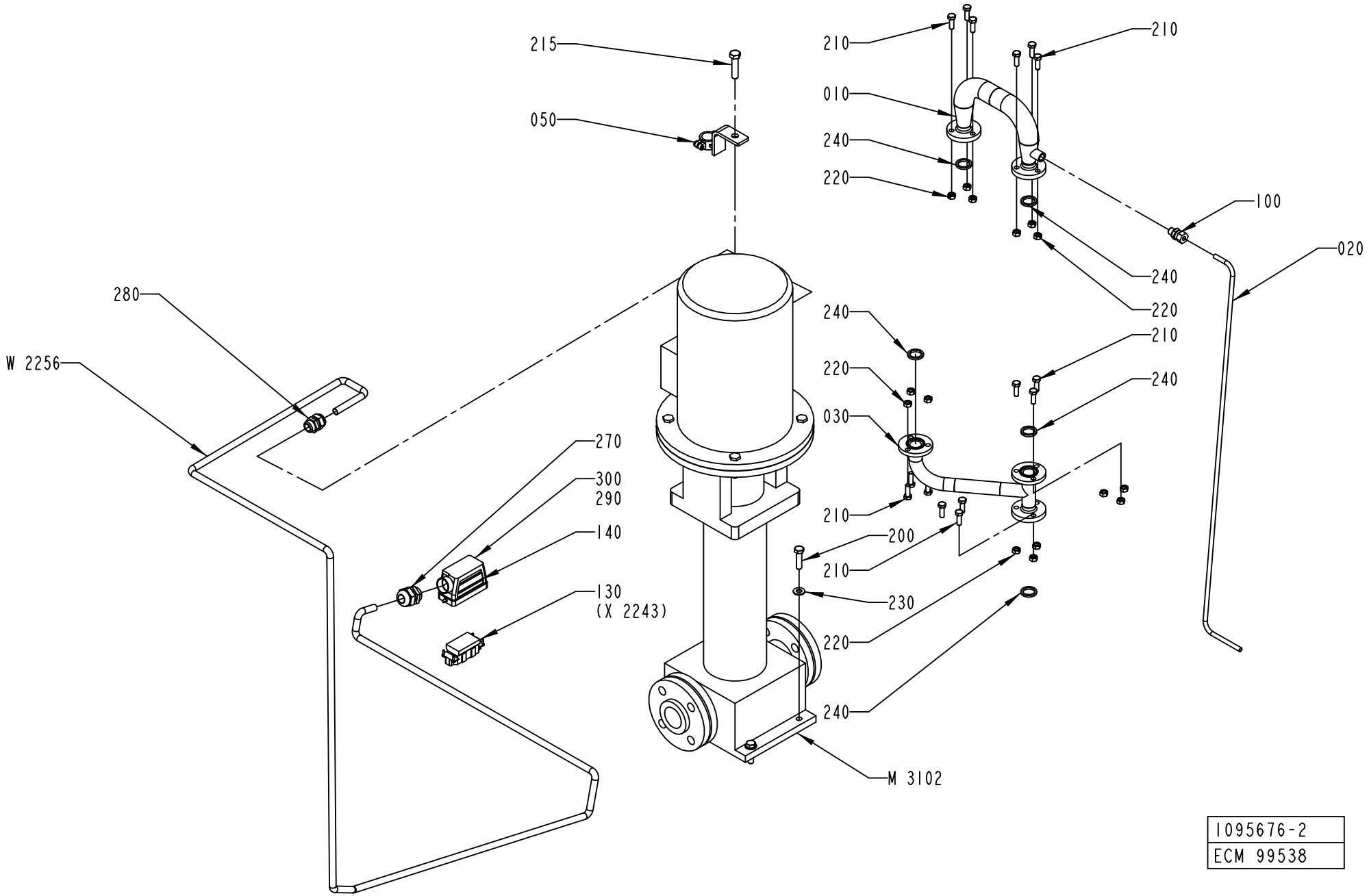

1095676-2
ECM 99538

ECM: 189422 - 20041104
Group number: 1095676-0100
Assembly Drawing: 1095676-2_1_AA

This list covers pages from 7-40 to 7-43

Pos	Part No	UN	Qty	Description	Page No
A3/FLEX 50HZ (See drawing on page: 7-40)					
020	1140642-0000		1	PIPE	
050	1140670-0000		1	BRACKET	
M3102	90321-0117		1	PUMP LOWARA SV8-14 F75T	
	90321-0593		*1*	*SEAL*	
W2256	351150-0166	MM	4000	CABLE OLFLEX 4X4 MM2 LIGHT/GREY	
A3/FLEX 60HZ (See drawing on page: 7-42)					
020	1140642-0000		1	PIPE	
050	1499786-0000		1	BRACKET	
M3102	90321-0120		1	PUMP SV8-09 F756T, 380V60HZ	
	90321-0593		*1*	*SEAL*	
W2256	351150-0166	MM	4000	CABLE OLFLEX 4X4 MM2 LIGHT/GREY	
Common Parts					
010	1036828-0000		1	TANK	
030	1041946-0000		1	PIPE	
100	90030-0185		1	CONN. STR. GE08LRED71	
130	90110-0156		1	MALE INSERT 70.210.0653.0	
140	90110-0227		1	CABLE HOOD 6-16-POL 71.350.1628.0	
200	312105-0499		4	SCREW M6S ISO 4014 M10X40 A480	
210	312105-0453		15	SCREW M6S ISO 4017 M8X25 A480	
215	312105-0542		1	SCREW M6S ISO 4014 M12X50 A480	
220	312605-0318		15	HEXAGON NUT, M6M M8 A280	
230	315105-0173		4	WASHER BRB 10,5X22 RFR	
240	315229-0103		5	GASKETS, 23,1X30,1X3,7 MM 1" FDA	
270	352103-0115		1	CABLE GLAND, STR 21, PR28,3/PG21	
280	352103-0111		1	CABLE GLAND, ST 16, PR22,5/PG16	
290	359005-0010		2	MARKING LABEL KIT 0 - 9, 04.841.2150.0	
300	359005-0050		1	MARKING LABEL KIT X, 04.841.4550.0	

Pos	Part No	UN	Qty	Description	Page No

BRANCHING PIPE

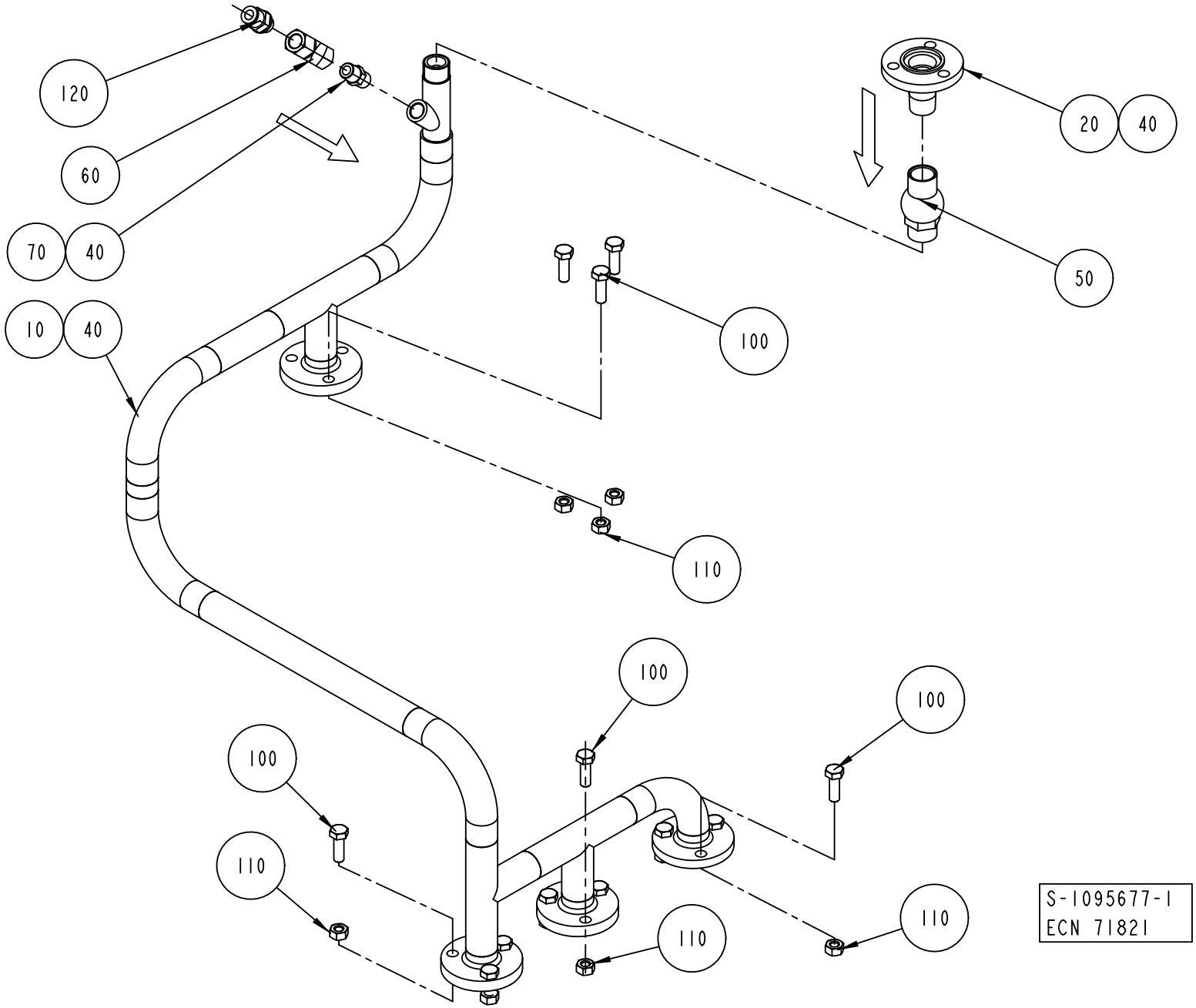

ECM: 224831 - 20050831
Group number: 1095677-0100
Assembly Drawing: 1095677-1_1_AB

Pos	Part No	UN	Qty	Description	Page No
-					
010	1041934-0000		1	PIPE	
020	1036827-0000		1	PIPE	
040	90144-0007	MM	1	TAPE	
050	90230-0042		1	NON-RETURN VALVE 1/2"	
060	90235-0151		1	NON-RETURN VALVE, 534 098 110 0	
070	90330-0043		1	NIPPLES, EXT. THREAD. R-207R1/4	
100	312115-0453		12	SCREW ISO4762 M8X25 A4 80	
110	312605-0318		12	HEXAGON NUT, M6M M8 A280	
120	342722-0205		1	STRAIGHT COUPLING D=8-G1/4"	

Pos	Part No	UN	Qty	Description	Page No

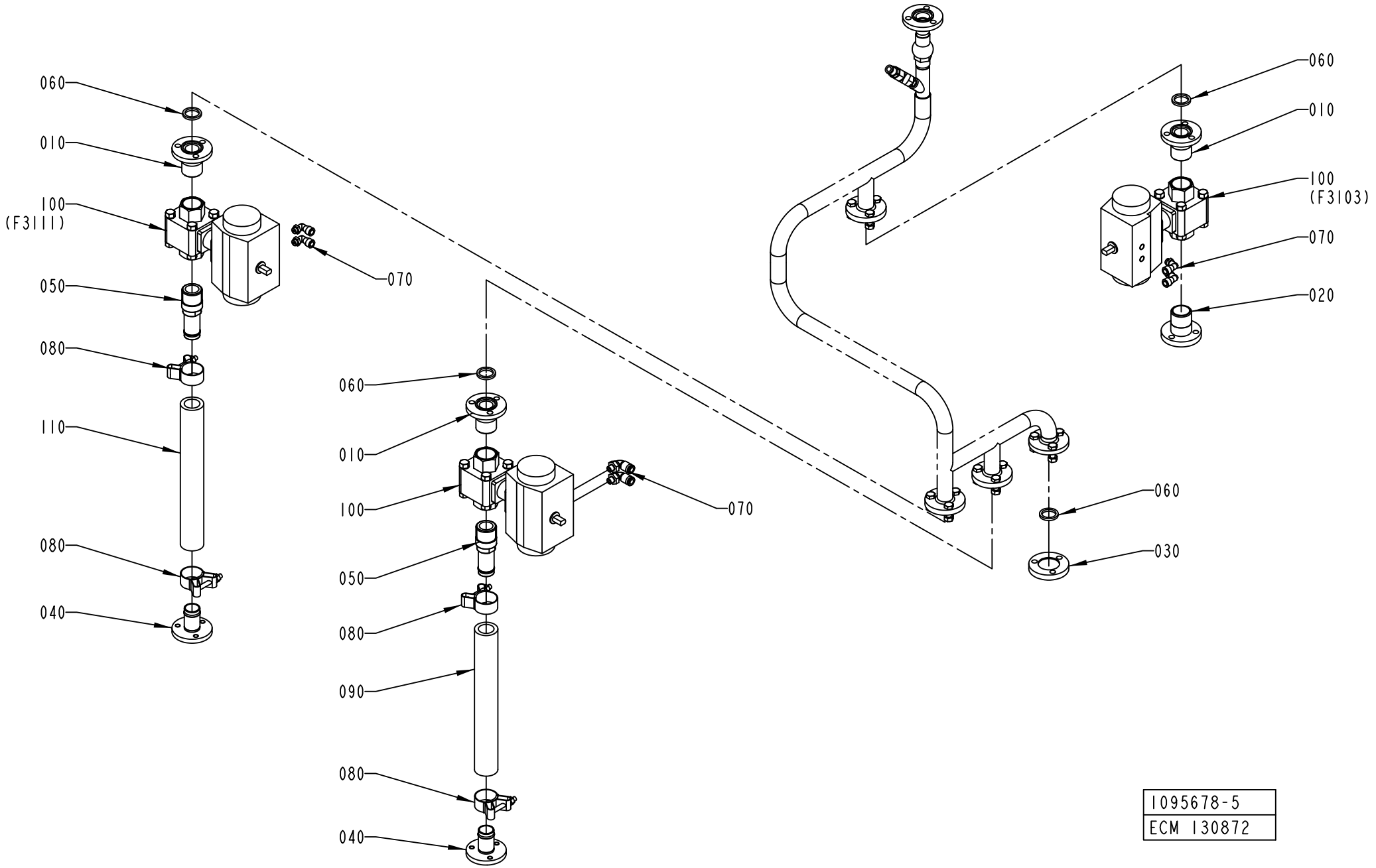
060
010
100
(F3111)
050
080
110
080
040
070
060
010
100
050
080
090
080
040
070
060
010
100
(F3103)
070
020
060
030
1095678-5
ECM 130872

ECM: 189424 - 20041104
Group number: 1095678-0300
Assembly Drawing: 1095678-5_1_AC

Pos	Part No	UN	Qty	Description	Page No
A3/FLEX					
010	2522148-0000		3	PIPE	
020	2522184-0000		1	PIPE	
030	1037129-0000		1	LID	
040	1195466-0000		2	PIPE	
050	1487023-0000		2	PIPE	
070	90458-2964		6	ELBOW PIPE JOINT, EXT.THREAD, D=8MM-G1/8	
080	90459-2366		4	HOSE CLIP, (32)-35	
100	90187-0148		3	BALL VALVE G1	
	90187-0319		*1*	*GASKET UNIT*	
Common Parts					
060	315229-0103		4	GASKETS, 23,1X30,1X3,7 MM 1" FDA	
090	90166-0233	MM	300	HOSE	
110	90166-0233	MM	300	HOSE	

Pos	Part No	UN	Qty	Description	Page No

MACHINE BODY

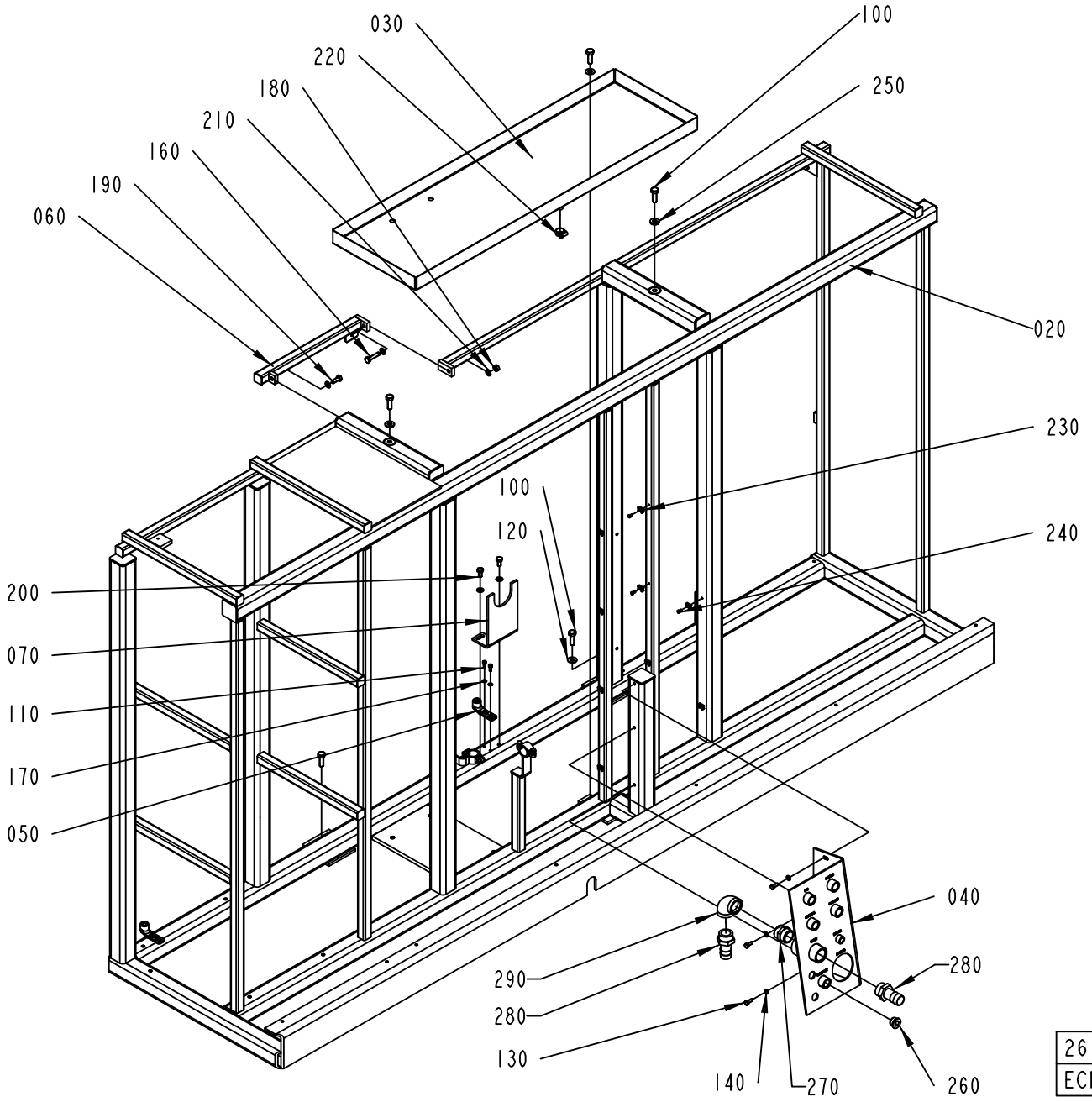

2613034-2
ECM 164885

ECM: 189425 - 20041104
Group number: 2613034-0100
Assembly Drawing: 2613034-2_1_AA

Pos	Part No	UN	Qty	Description	Page No
A3/FLEX					
270	342700-0116		1	NIPPLES,HEXAGON,EXT.G-THREAD G1"-G1"	
280	90055-0053		2	HOSE NIPPLE, EXT.THR. R1-25 MM	
290	90330-0014		1	ELBOW, 90 INT. THREAD, R-222R1	
Common Parts					
020	2613033-0000		1	MACHINE BODY	
030	1041963-0000		1	WASTE BOX	
040	1129387-0000		1	CONNECTION TABLE	
050	1538868-0000		3	BRACKET	
060	1255293-0000		1	CROSS BAR	
070	2524363-0000		1	HANGER	
100	312105-0495		5	SCREW M6S ISO 4017 M10X30 A480	
110	312115-0327		6	SCREW ISO4762 M5X12 A4 80	
120	315105-0173		3	WASHER BRB 10,5X22 RFR	
130	312105-0368		3	SCREW M6S ISO 4017 M6X16 A480	
140	315105-0153		3	WASHER BRB 6,4X12 RFR	
150	90261-0069		1	PLUG, BLIND, PLASTIC, NO. 055-0615	
160	312109-0457		1	SCREW M6S ISO 4017 M8X35 A480	
170	315105-0146		6	WASHER BRB 5,3X10 RFR	
180	312605-0318		1	HEXAGON NUT, M6M M8 A280	
190	312105-0451		1	SCREW M6S ISO 4017 M8X20 A480	
200	312105-0449		2	SCREW M6S ISO 4017 M8X16 A480	
210	315105-0165		5	WASHER BRB 8,4X16 RFR	
220	342991-0102		1	HOSE CLIP,WORM DRIVE TYPE (16)-19	
230	352113-0205		15	ANCHOR PLATES FOR STRIPS, TYPE TM2S8-C10	
240	312125-0287		15	SCREW ISO 1207 M4X8 A4	
250	315115-0173		2	WASHER PLAIN, TBRB 10,5/22 H=4	
260	342713-0213		1	PLUG, EXT THREAD HEX SOCKET 8638-00-120	

Pos	Part No	UN	Qty	Description	Page No

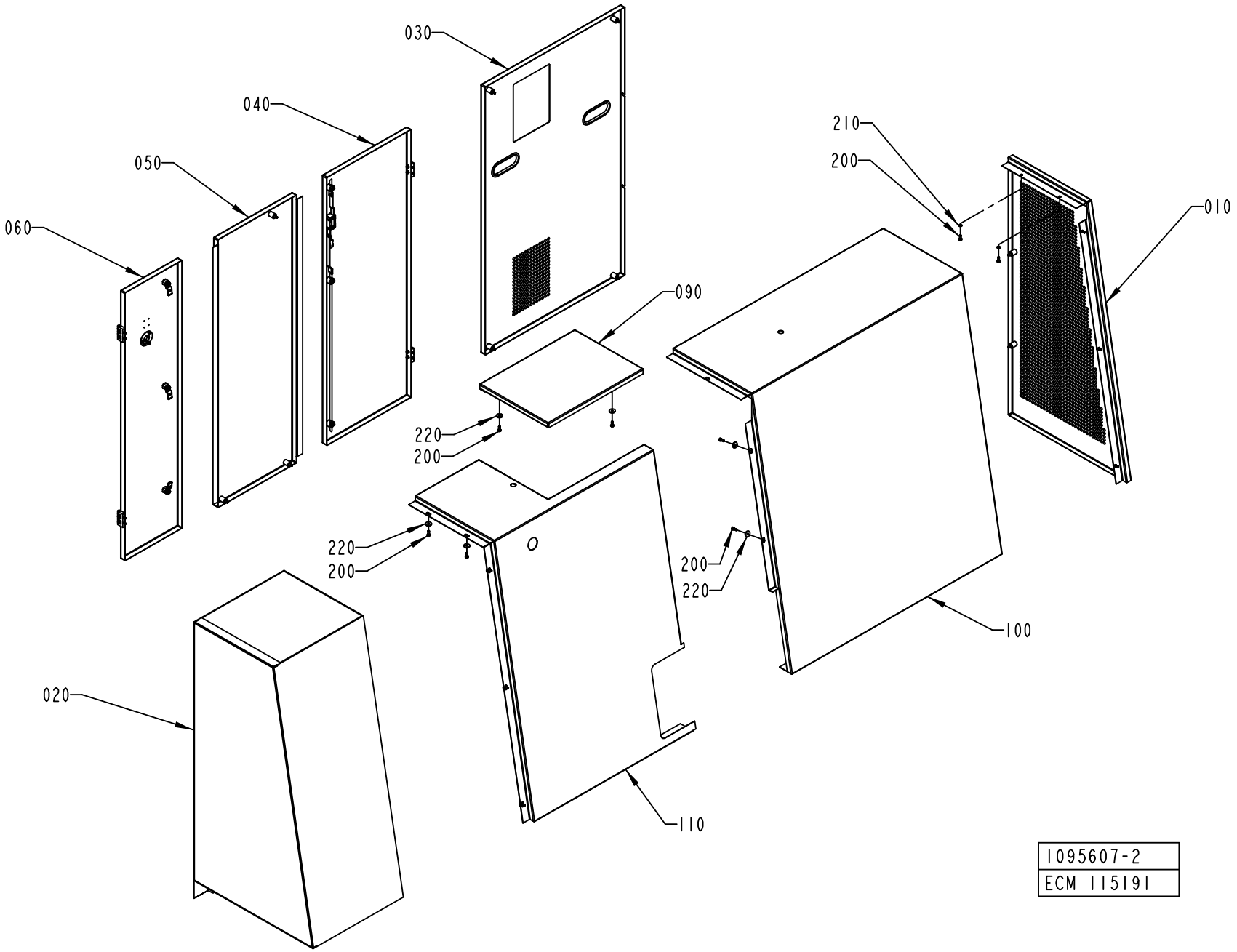
030
040
050
060
210
200
010
090
220
200
220
200
200
220
100
020
110
1095607-2
ECM 115191

ECM: 189432 - 20041104
Group number: 1095607-0200
Assembly Drawing: 1095607-2_1_AC

Pos	Part No	UN	Qty	Description	Page No
-					
010	1095883-0200		1	GABLE PLATE	**7-53**
020	1095886-0200		1	COVERING PANEL	**7-55**
030	1095888-0200		1	HATCH	**7-59**
040	1095889-0100		1	DOOR	**7-61**
050	1095890-0200		1	HATCH	**7-63**
060	1095891-0200		1	DOOR	**7-65, 7-67**
090	1255637-0000		1	COVER	
100	1255636-0000		1	COVERING PANEL	
110	1255638-0000		1	COVERING PANEL	
200	312105-0368		19	SCREW M6S ISO 4017 M6X16 A480	
210	315105-0153		5	WASHER BRB 6,4X12 RFR	
220	315125-0153		14	WASHER TBRSB 6,4X22X4 A4	

Pos	Part No	UN	Qty	Description	Page No

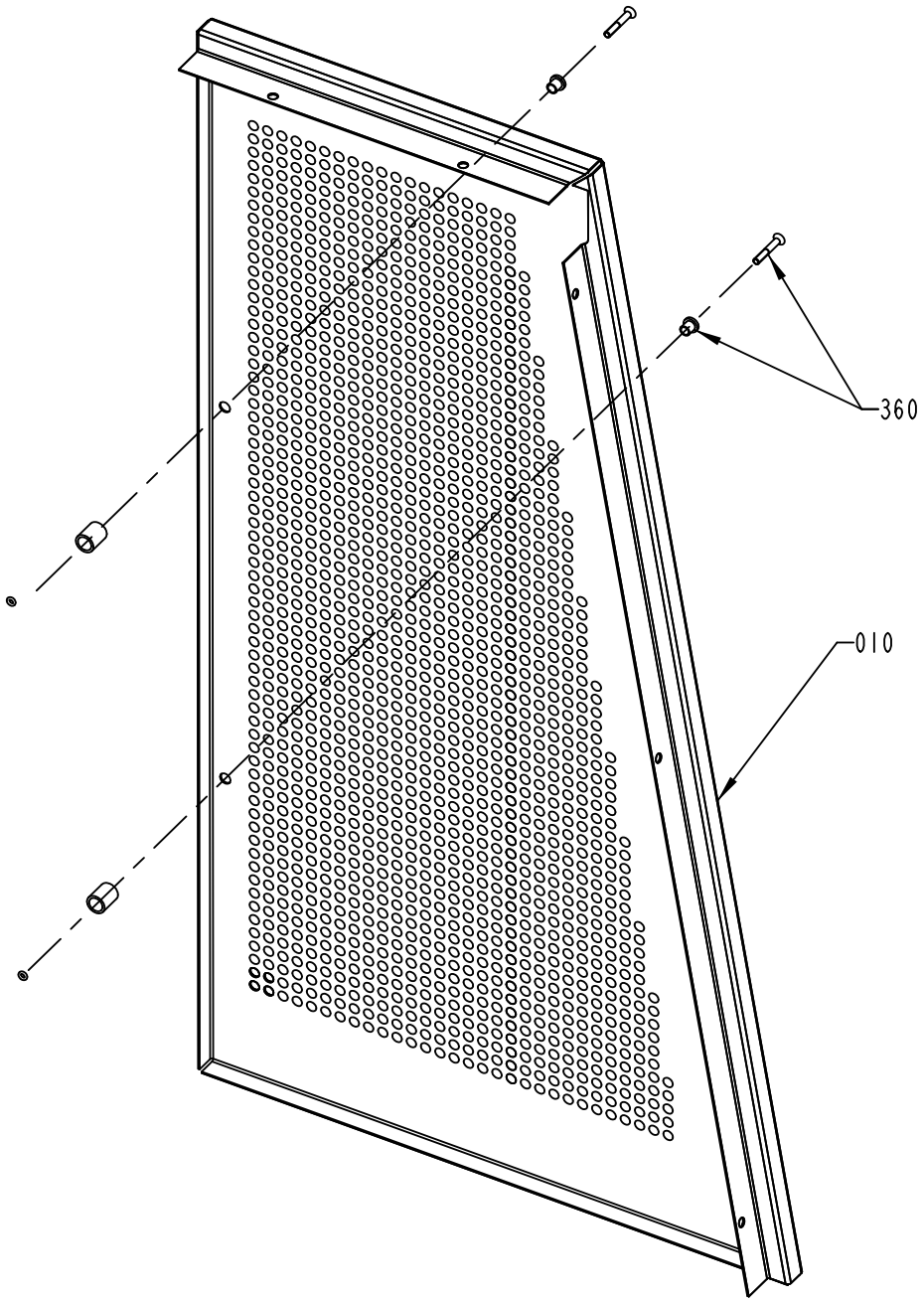
360
010

ECM: 189435 - 20041104
Group number: 1095883-0200
Assembly Drawing: 1095883-2_1_AA

Pos	Part No	UN	Qty	Description	Page No
-					
010	1255671-0000		1	GABLE PLATE	
360	90226-0458		2	MOUNTING SCREW	

Pos	Part No	UN	Qty	Description	Page No

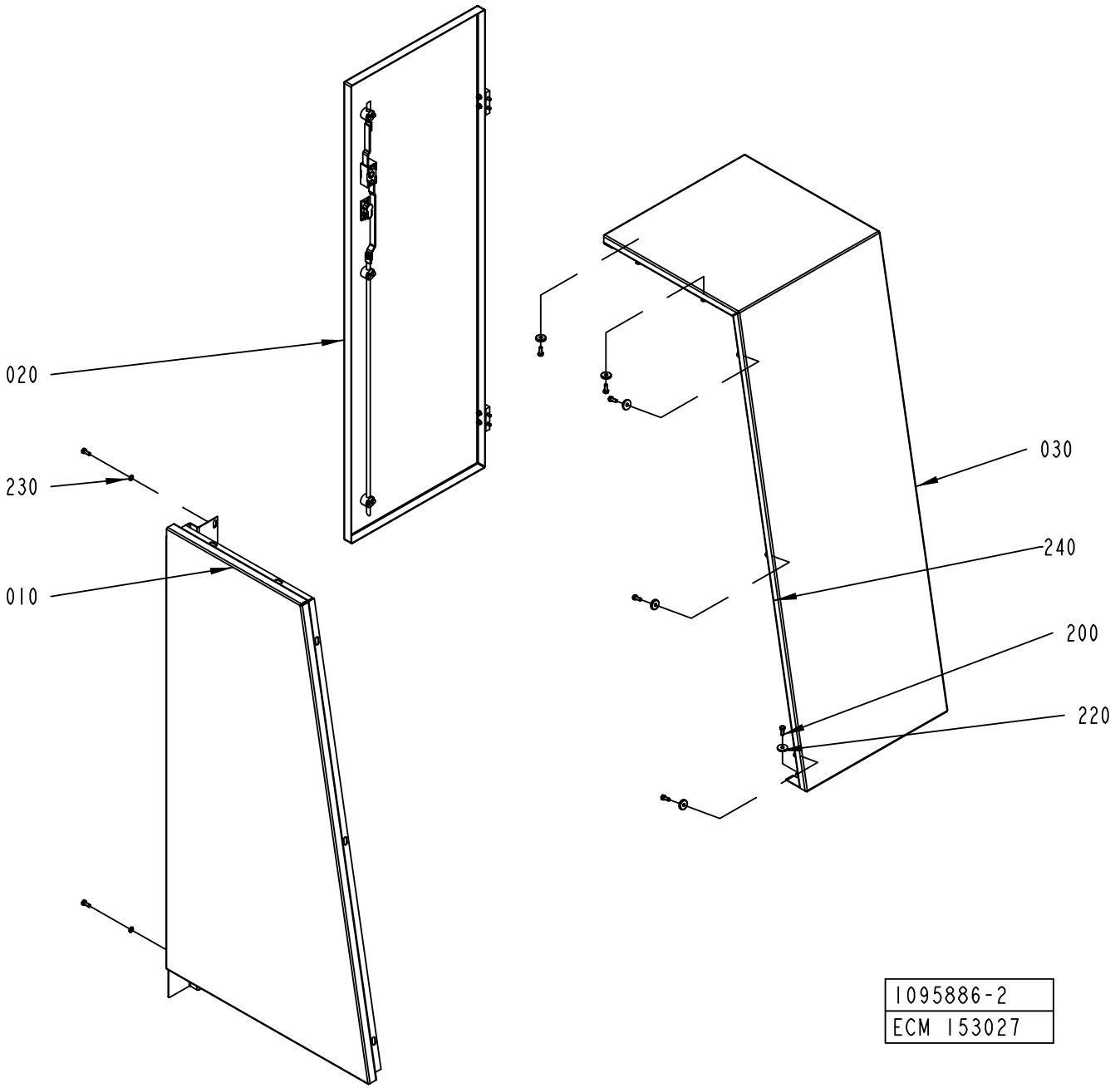
020
230
010
030
240
200
220
1095886-2
ECM 153027

ECM: 384875 - 20090402
Group number: 1095886-0200
Assembly Drawing: 1095886-2_1_AF

Pos	Part No	UN	Qty	Description	Page No
-					
010	2665129-0000		1	GABLE PLATE	
020	1484889-0100		1	DOOR	**7-57**
030	1041967-0000		1	COVERING PANEL	
200	312105-0368		7	SCREW M6S ISO 4017 M6X16 A480	
220	315125-0153		7	WASHER TBRSB 6,4X22X4 A4	
230	315105-0153		2	WASHER BRB 6,4X12 RFR	
240	90143-0060	MM	1120	EDGE STRIP 9,5X6,3MM BLACK PVC	

Pos	Part No	UN	Qty	Description	Page No

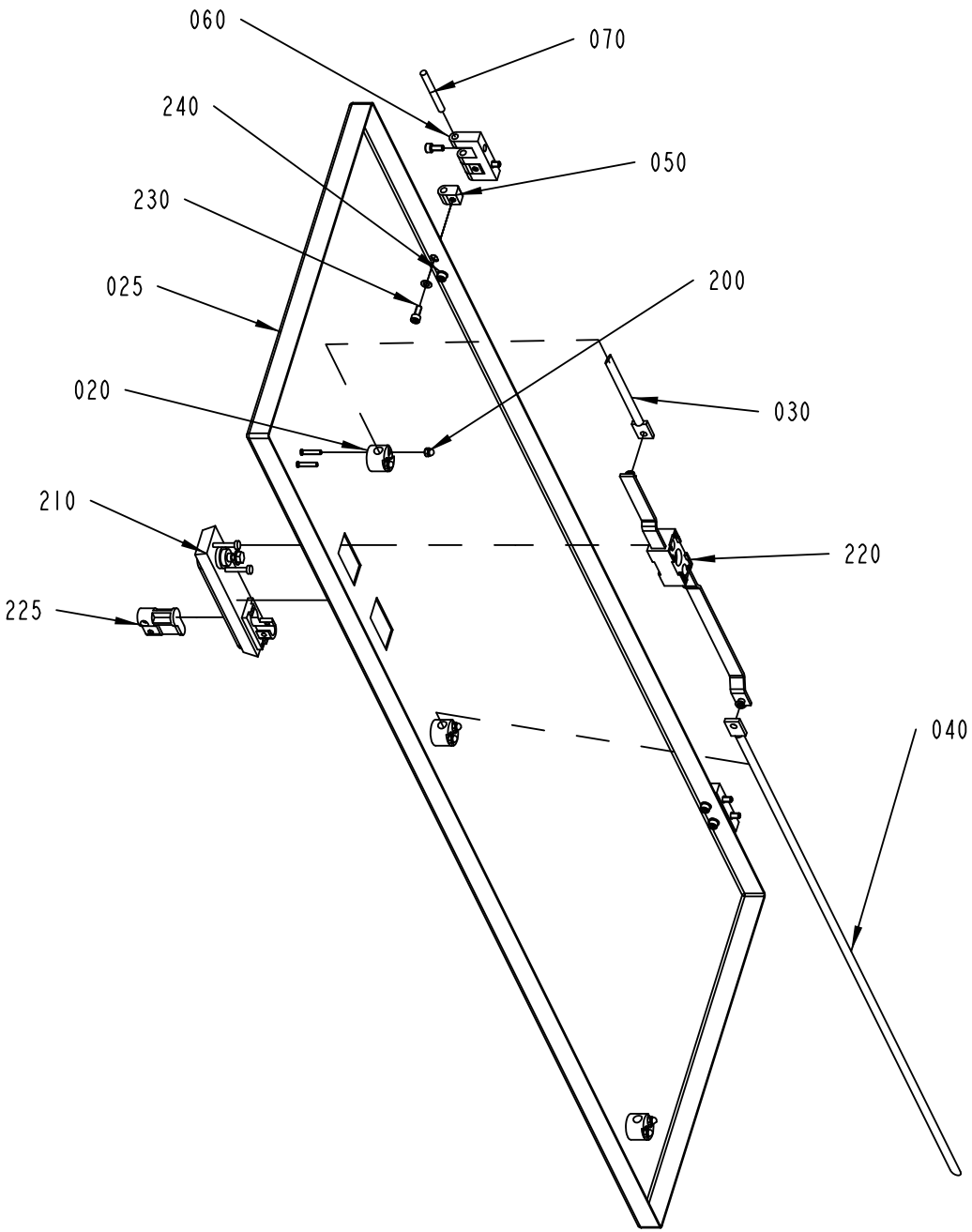
060
070
240
050
230
025
200
020
030
210
220
225
040
1484889-1
337049

ECM: 340137 - 20080124
Group number: 1484889-0100
Assembly Drawing: 1484889-1_1_AC

Pos	Part No	UN	Qty	Description	Page No
-					
020	1129274-0000		3	GUIDE LUG	
025	1484890-0000		1	DOOR	
030	2665132-0000		1	LOCKING ARM	
040	2665131-0000		1	LOCKING ARM	
050	1035794-0000		4	BLOCKING PIECE	
060	1035792-0000		2	E-HINGE	
070	988685-0000		2	PIN	
200	312705-0312		6	NUT HEX. DOMED CAP MHM-6 M4 A280	
210	90237-0175		1	TURNING HANDLE, 1125-U185-0A	
220	90237-0153		1	LOCK HOUSING, 1121-U26-0B	
225	90237-0128		1	LOCK CYLINDER, 1109-SU125	
230	312115-0327		8	SCREW ISO4762 M5X12 A4 80	
240	315105-0146		4	WASHER BRB 5,3X10 RFR	

Pos	Part No	UN	Qty	Description	Page No

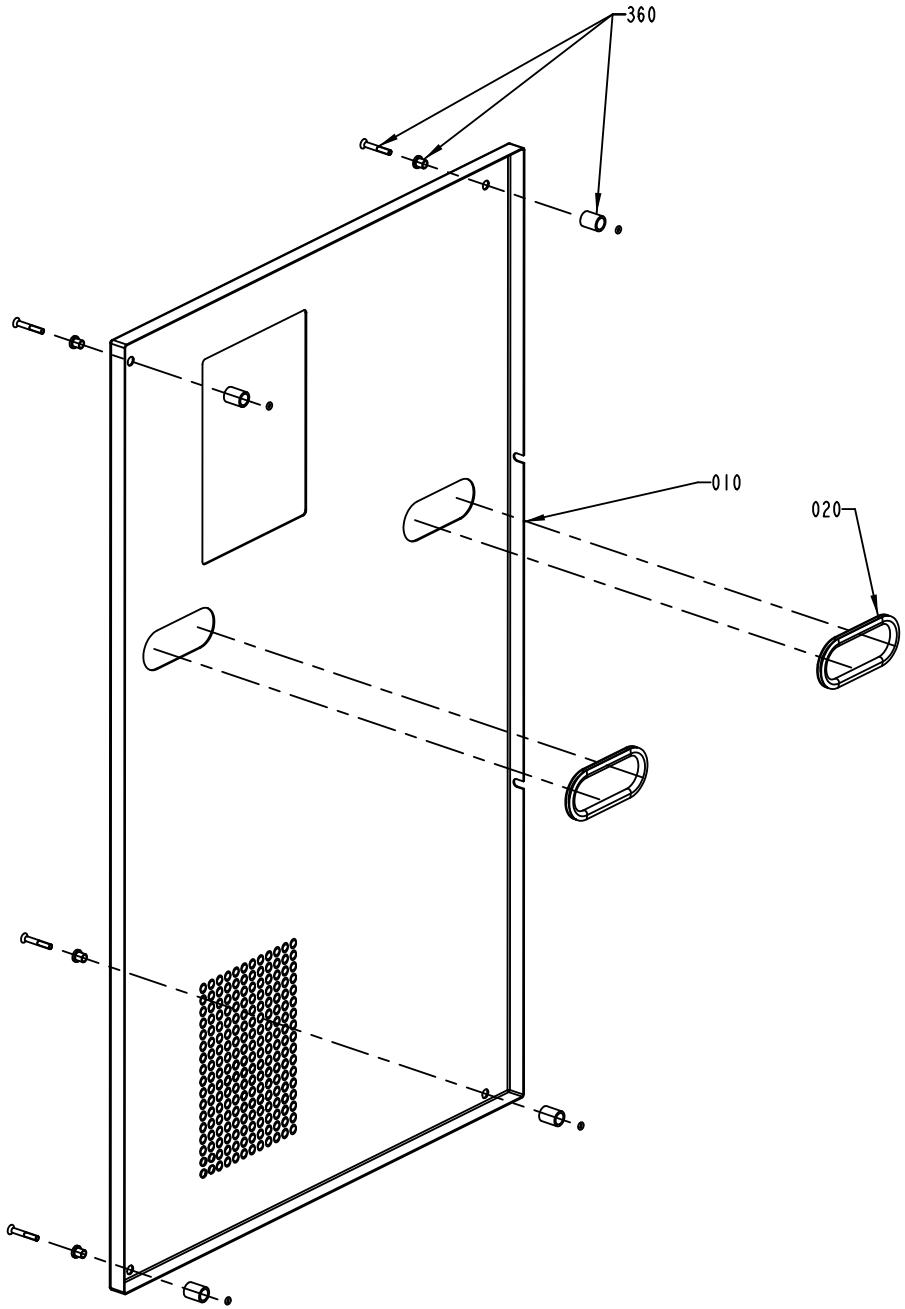
360
010
020

ECM: 384876 - 20090402
Group number: 1095888-0200
Assembly Drawing: 1095888-2_1_AB

Pos	Part No	UN	Qty	Description	Page No
-					
010	1255633-0000		1	HATCH	
020	90143-0060	M	1	EDGE STRIP 9,5X6,3MM BLACK PVC	
360	90226-0458		4	MOUNTING SCREW	

Pos	Part No	UN	Qty	Description	Page No

Machine Type | Group Description | Used-In | Group Number | Page No

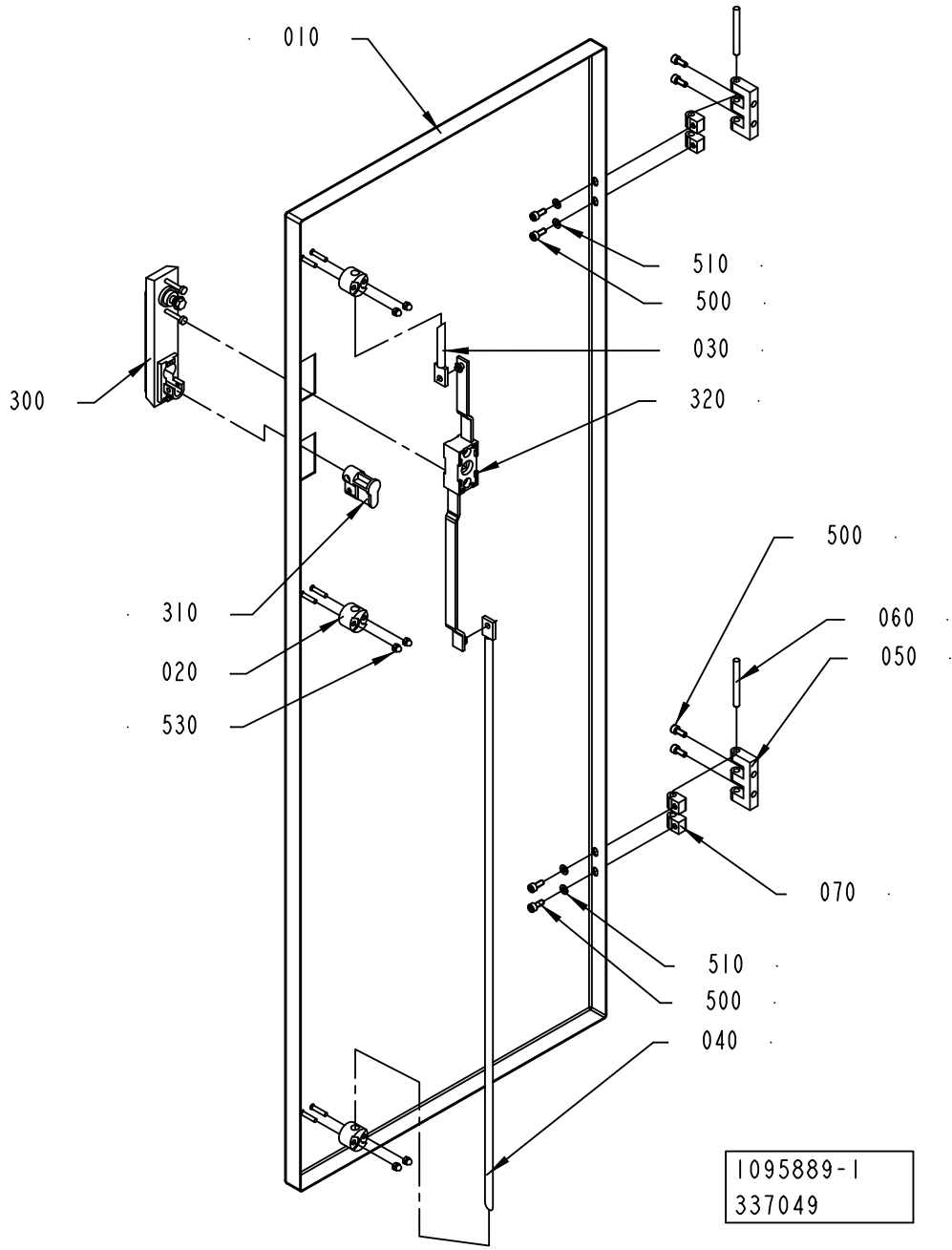
010
510
500
030
320
300
500
060
050
310
020
530
070
510
500
040
1095889-1
337049

ECM: 340138 - 20080124
Group number: 1095889-0100
Assembly Drawing: 1095889-1_1_AC

Pos	Part No	UN	Qty	Description	Page No
-					
010	1041970-0000		1	DOOR	
020	1129274-0000		1	GUIDE LUG	
030	1036304-0001		1	LOCKING ARM	
040	1036304-0014		1	LOCKING ARM	
050	1035792-0000		2	E-HINGE	
060	988685-0000		2	PIN	
070	1035794-0000		4	BLOCKING PIECE	
300	90237-0175		1	TURNING HANDLE, 1125-U185-0A	
310	90237-0128		1	LOCK CYLINDER, 1109-SU125	
320	90237-0153		1	LOCK HOUSING, 1121-U26-0B	
500	312115-0327		8	SCREW ISO4762 M5X12 A4 80	
510	315105-0146		4	WASHER BRB 5,3X10 RFR	
530	312705-0312		6	NUT HEX. DOMED CAP MHM-6 M4 A280	

Pos	Part No	UN	Qty	Description	Page No

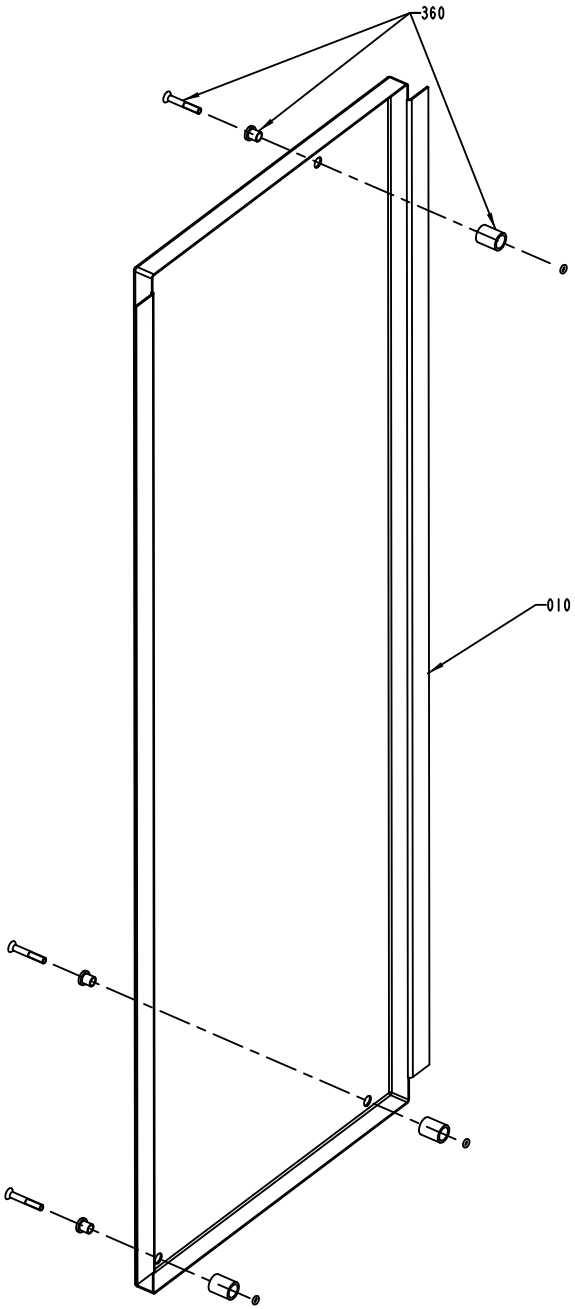
360
010

ECM: 189439 - 20041104
Group number: 1095890-0200
Assembly Drawing: 1095890-2_1_AA

Pos	Part No	UN	Qty	Description	Page No
-					
010	1255635-0000		1	HATCH	
360	90226-0458		3	MOUNTING SCREW	

Pos	Part No	UN	Qty	Description	Page No

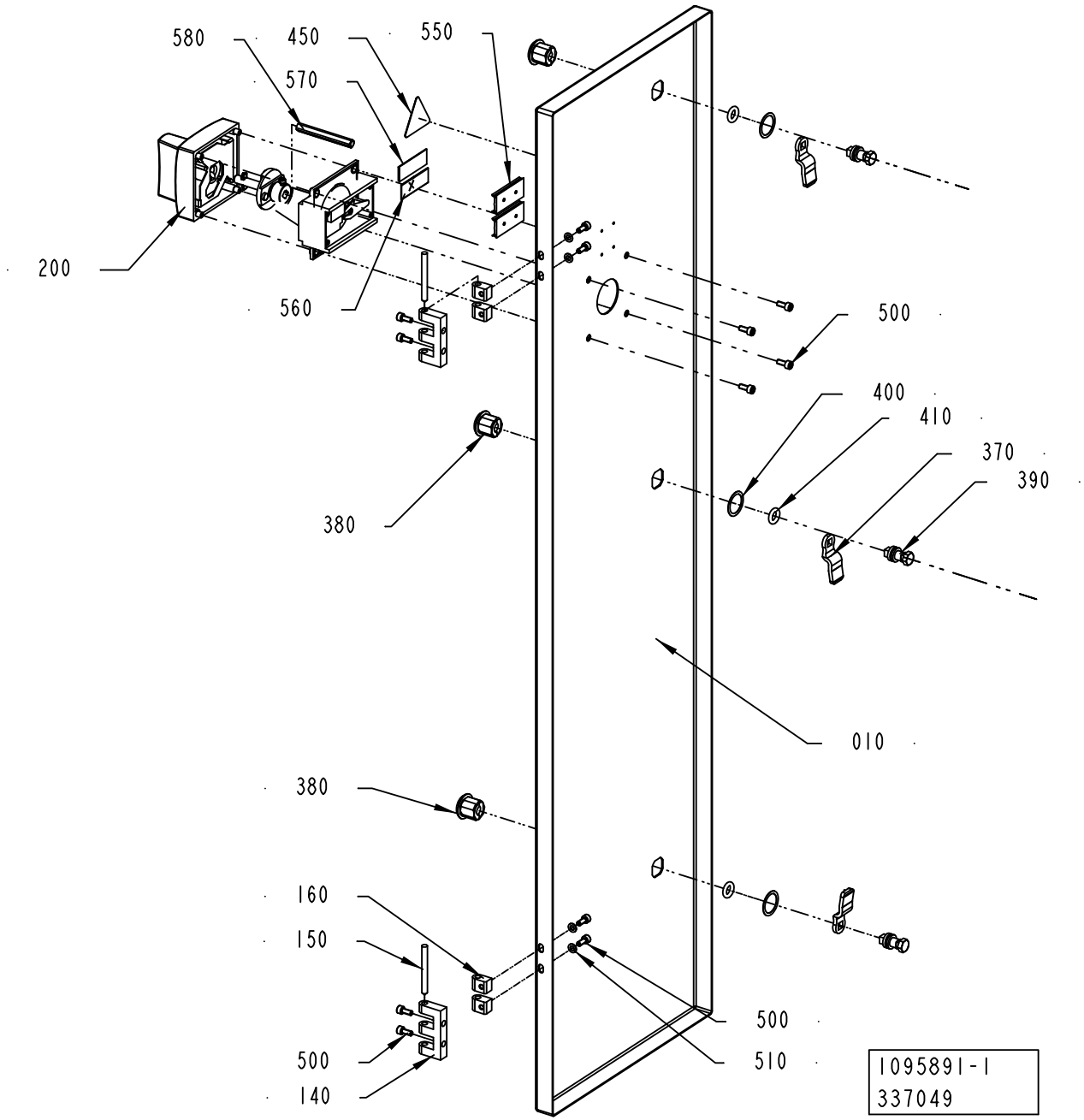
580
450
550
570
200
560
500
400
410
370
390
380
010
380
160
150
500
140
500
510
1095891-1
337049

ECM: 377700 - 20081130
Group number: 1095891-0200
Assembly Drawing: 1095891-1_1_AD

This list covers pages from 7-64 to 7-67

Pos	Part No	UN	Qty	Description	Page No
50HZ (See drawing on page: 7-64)					
010	2843000-0000		1	DOOR	
200	90459-6620		1	HANDLE, NZM1-XTVDV	
450	359705-0015		1	WARNING SIGN ISO, RISK OF ELECTRIC SHOCK	
550	359240-0100		2	SIGN HOLDER FOR 359240-0001	
570	359243-0917		1	SIGN"400V, 50HZ, 100A"	
60HZ (See drawing on page: 7-64)					
010	2843000-0000		1	DOOR	
200	90459-6620		1	HANDLE, NZM1-XTVDV	
450	359705-0015		1	WARNING SIGN ISO, RISK OF ELECTRIC SHOCK	
550	359240-0100		2	SIGN HOLDER FOR 359240-0001	
570	359243-0918		1	SIGN"400V, 60HZ, 100A"	
CSA (See drawing on page: 7-66)					
010	3000365-0000		1	DOOR	
200	90600-5272		1	ROTARY DOOR HANDLE, NZM1-XTVDV-NA	
450	359715-0100		1	WARNING SIGN ANSI (H), ELECTRIC SHOCK	
550	359240-0100		1	SIGN HOLDER FOR 359240-0001	
570	90459-7228		1	ELECTRICAL EQUIPMENT SIGN, TEMPLATE	
600	311521-0143		4	RIVET, BLANK 3,2X8	
Common Parts					
140	1035792-0000		2	E-HINGE	
150	988685-0000		2	PIN	
160	1035794-0000		4	BLOCKING PIECE	
370	90237-0157		3	LOCK BOLT, 1000-230	
380	90237-0319		3	LOCK HOUSING, 1000-U134	
390	90237-0320		3	LOCK HOUSING, 1000-U136	
400	90237-0322		3	LOCK GASKET, 1000-U137	
410	90237-0323		3	LOCK O-RING, 1000-24	
490	311520-0329		4	RIVET, BLANK 2,4X8	
500	312115-0327		12	SCREW ISO4762 M5X12 A4 80	
510	315105-0146		4	WASHER BRB 5,3X10 RFR	
560	359241-0431		1	SIGN: " MAIN SWITCH"	
580	2774348-0000		1	EXTENSION SHAFT	

Pos	Part No	UN	Qty	Description	Page No

Machine Type | Group Description | Used-In | Group Number | Page No

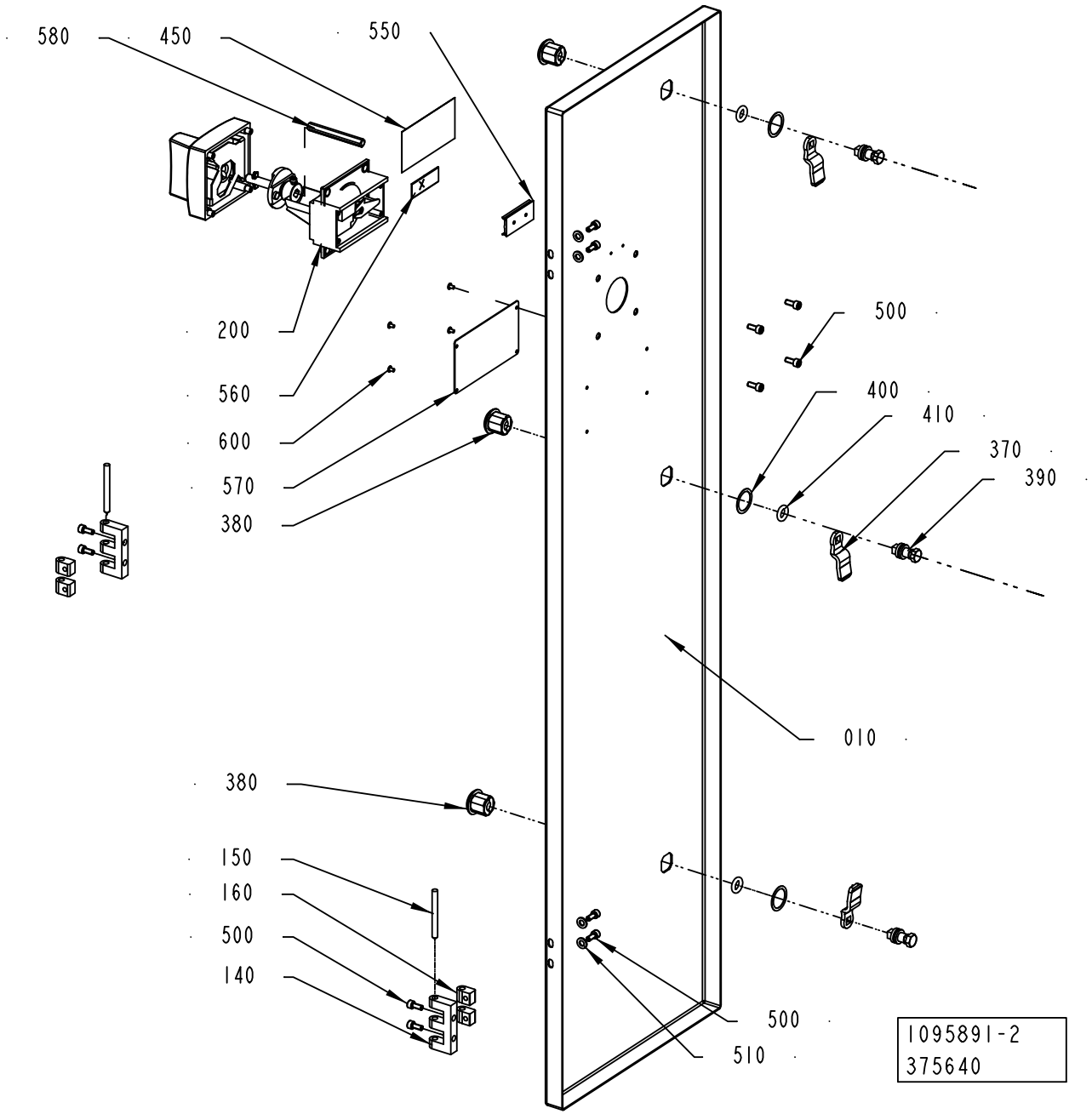
580
450
550
200
560
600
570
380
500
400
410
370
390
010
380
150
160
500
140
500
510
1095891-2
375640

ECM: 377700 - 20081130
Group number: 1095891-0200
Assembly Drawing: 1095891-2_1_AA

This list covers pages from 7-64 to 7-67

Pos	Part No	UN	Qty	Description	Page No
50HZ (See drawing on page: 7-64)					
010	2843000-0000		1	DOOR	
200	90459-6620		1	HANDLE, NZM1-XTVDV	
450	359705-0015		1	WARNING SIGN ISO, RISK OF ELECTRIC SHOCK	
550	359240-0100		2	SIGN HOLDER FOR 359240-0001	
570	359243-0917		1	SIGN"400V, 50HZ, 100A"	
60HZ (See drawing on page: 7-64)					
010	2843000-0000		1	DOOR	
200	90459-6620		1	HANDLE, NZM1-XTVDV	
450	359705-0015		1	WARNING SIGN ISO, RISK OF ELECTRIC SHOCK	
550	359240-0100		2	SIGN HOLDER FOR 359240-0001	
570	359243-0918		1	SIGN"400V, 60HZ, 100A"	
CSA (See drawing on page: 7-66)					
010	3000365-0000		1	DOOR	
200	90600-5272		1	ROTARY DOOR HANDLE, NZM1-XTVDV-NA	
450	359715-0100		1	WARNING SIGN ANSI (H), ELECTRIC SHOCK	
550	359240-0100		1	SIGN HOLDER FOR 359240-0001	
570	90459-7228		1	ELECTRICAL EQUIPMENT SIGN, TEMPLATE	
600	311521-0143		4	RIVET, BLANK 3,2X8	
Common Parts					
140	1035792-0000		2	E-HINGE	
150	988685-0000		2	PIN	
160	1035794-0000		4	BLOCKING PIECE	
370	90237-0157		3	LOCK BOLT, 1000-230	
380	90237-0319		3	LOCK HOUSING, 1000-U134	
390	90237-0320		3	LOCK HOUSING, 1000-U136	
400	90237-0322		3	LOCK GASKET, 1000-U137	
410	90237-0323		3	LOCK O-RING, 1000-24	
490	311520-0329		4	RIVET, BLANK 2,4X8	
500	312115-0327		12	SCREW ISO4762 M5X12 A4 80	
510	315105-0146		4	WASHER BRB 5,3X10 RFR	
560	359241-0431		1	SIGN: " MAIN SWITCH"	
580	2774348-0000		1	EXTENSION SHAFT	

Pos	Part No	UN	Qty	Description	Page No

Machine Type | Group Description | Used-In | Group Number | Page No

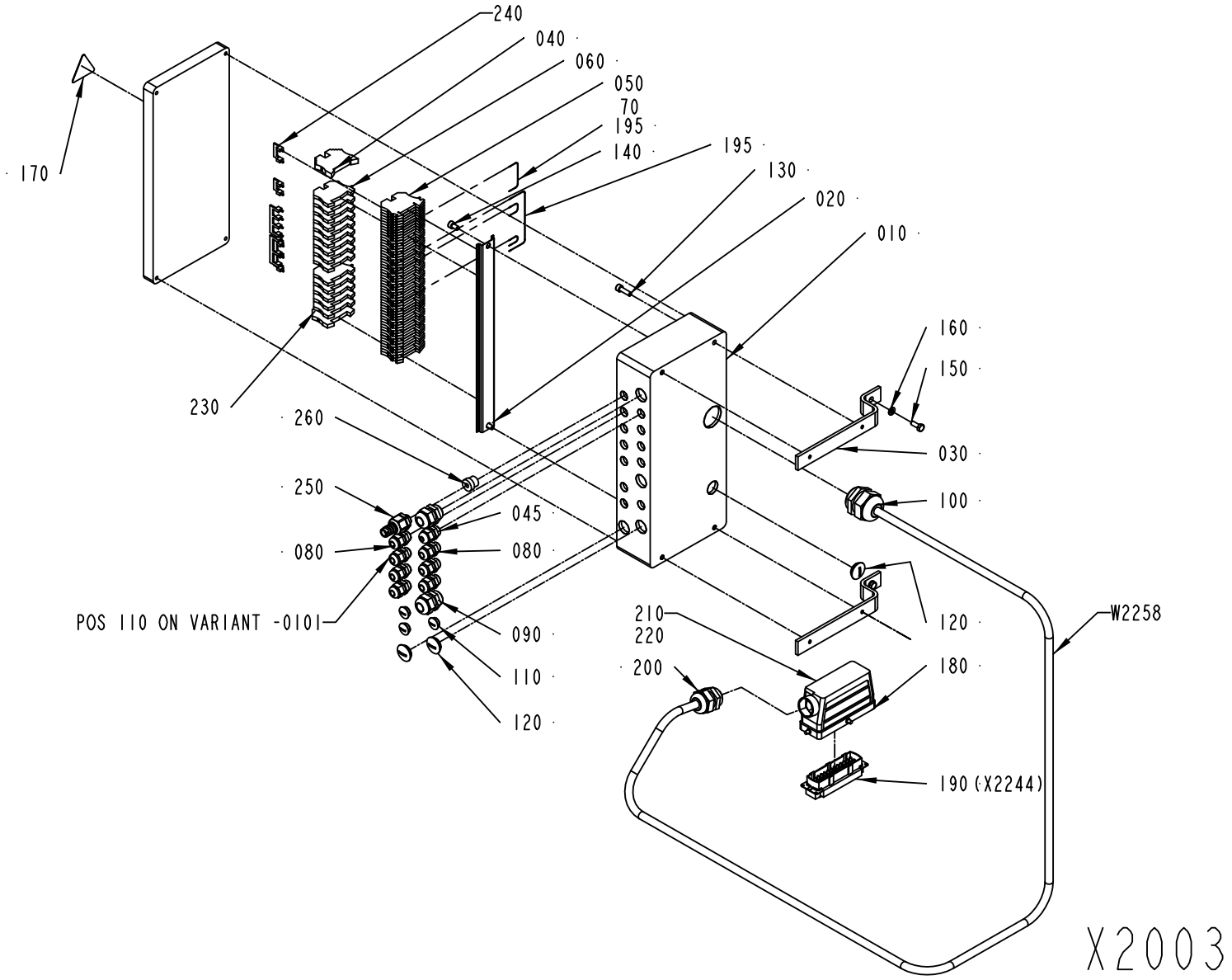

1095630-3
337049

ECM: 340136 - 20080124
Group number: 1095630-0200
Assembly Drawing: 1095630-3_1_AD

Pos	Part No	UN	Qty	Description	Page No
A3/FLEX					
080	352103-0101		7	CABLE GLAND, ST 9, PR15,2/PG9	
110	90002-0013		3	BLANK-OFF PLUG, PR 15,2 SKINDICHT-BLK9	
250	353242-0005		1	HOSE GLAND W/O INSERT PG9 NORMAL	
260	353249-0067		1	INSERT, SINGLE HOLE, E150/7	
W2258	351150-0425	MM	3000	CABLE OLFLEX 25X0,75 MM2 LIGHT/GREY	
Common Parts					
010	1129202-0000		1	CONNECTION BOX	
020	1129209-0000		1	MOUNTING RAIL	
030	1129182-0000		2	BRACKET	
040	353031-0203		1	END SUPPORT, WEW 35/2	
045	352103-0100		1	CABLE GLAND, STR 9, PR15,2/PG9	
050	353021-0216		40	FEED THROUGH TERMINAL, 10200.8	
060	353024-0204		14	EARTH TERMINAL WPE 2,5	
070	359011-0809		2	MARKING PLATES 5-FW 101-150	
090	352103-0110		2	CABLE GLAND, STR 16, PR22,5/PG16	
100	352103-0120		1	CABLE GLAND, STR 29, PR37,0/PG29	
120	90002-0004		3	BLANK-OFF PLUG, PR 22,5 SKINDICHT-BLK16	
130	312115-0370		4	SCREW ISO4762 M6X20 A4 80	
140	312115-0364		2	SCREW ISO4762 M6X10 A4 80	
150	312105-0368		2	SCREW M6S ISO 4017 M6X16 A480	
160	315105-0153		2	WASHER BRB 6,4X12 RFR	
170	359705-0015		1	WARNING SIGN ISO, RISK OF ELECTRIC SHOCK	
180	90110-0228		1	CABLE HOOD 24-POL 71.350.2428.0	
190	90110-0150		1	MALE INSERT 121110 0000	
195	351160-0102	M	1	WIRE AWM 1X0,75 MM2 DARKBLUE	
200	352103-0116		1	CABLE GLAND, ST 21, PR28,3/PG21	
210	359005-0050		1	MARKING LABEL KIT X, 04.841.4550.0	
220	359005-0010		1	MARKING LABEL KIT 0 - 9, 04.841.2150.0	
230	353024-0205		1	EARTH TERMINAL, 1010.1	
240	353034-0030		4	BRIDGE CONNECTOR WQV 2,5/10, 10544.6	

Pos	Part No	UN	Qty	Description	Page No

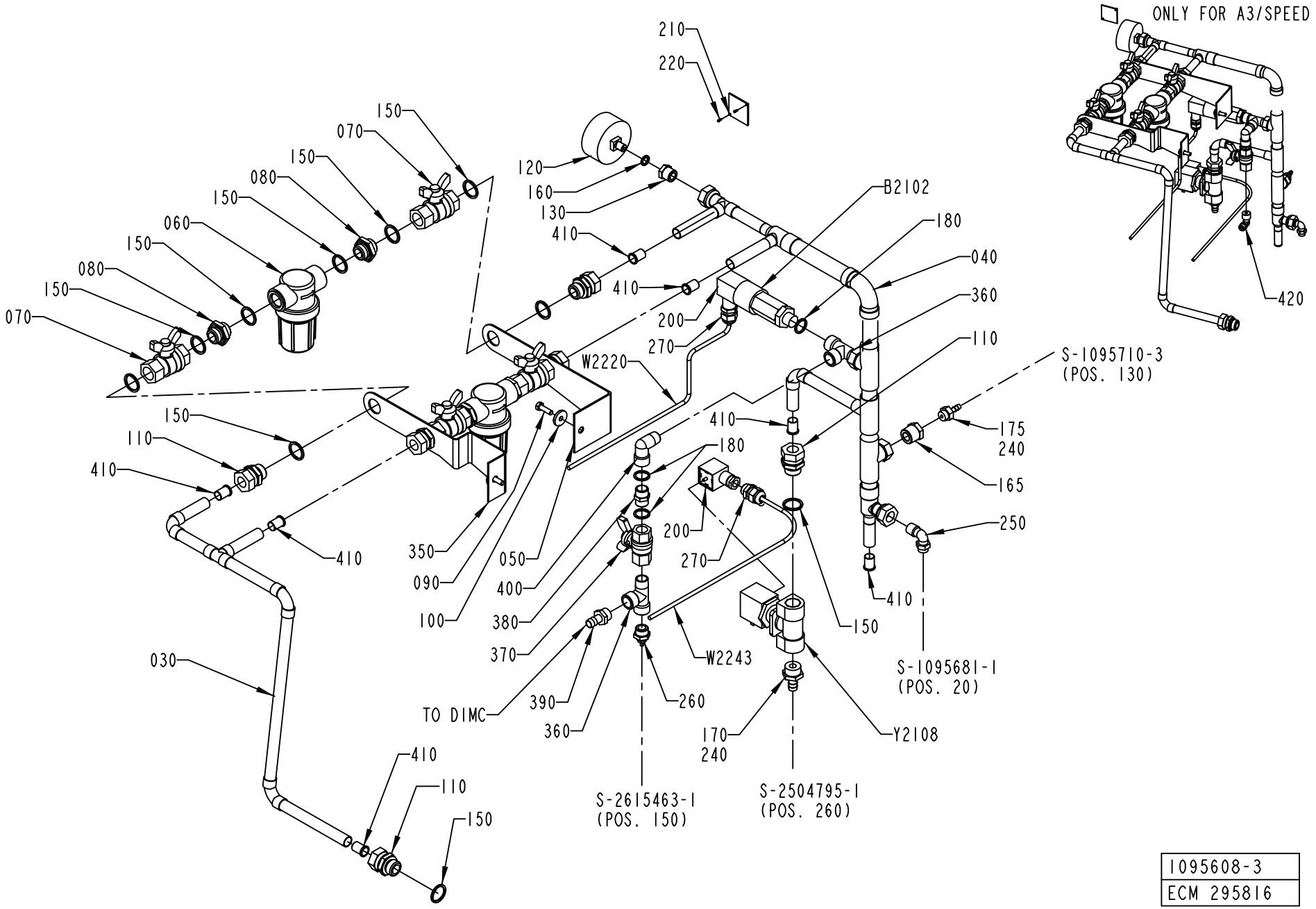

1095608-3
ECM 295816

ECM: 339610 - 20090402
Group number: 1095608-0100
Assembly Drawing: 1095608-3_1_AD

This list covers pages from 7-70 to 7-73

Pos	Part No	UN	Qty	Description	Page No
A3/FLEX COMPRESSOR (See drawing on page: 7-70)					
165	342901-0102		1	HOSE NIPPLE, EXT.THR. R1/4-7 MM	
175	90330-0085		1	BUSHING, INT/EXT. THR. R1/2-RP1/4	
180	315239-0111		3	NYLON WASHER G3/8, 3/8RRP	
200	90110-0095		1	CONNECTOR 3 POLE + EARTH	
260	342921-0115		1	STRAIGHT COUPLING,EXT.THREADED 6/4-G3/8"	
270	352103-0101		2	CABLE GLAND, ST 9, PR15,2/PG9	
330	2550944-0000		1	WATER DIAGRAM	
360	90140-0023		2	T-PIPE, INT. THREAD, NO. 2070-3/8-3/8	
370	90187-0089		1	BALL VALVE G3/8, NPBR	
380	342700-0111		1	NIPPLES,HEXAGON,EXT.G-THREAD G3/8"-G3/8"	
390	90163-0041		1	HOSE NIPPLE, EXT.THR. 3/8-12 MM	
400	90140-0020		1	ELBOW, 90, INT/EXT. THREAD, NO. 2020-3/8	
A3/FLEX ICE-WATER (See drawing on page: 7-72)					
180	315239-0111		3	NYLON WASHER G3/8, 3/8RRP	
200	90110-0095		1	CONNECTOR 3 POLE + EARTH	
235	342920-0124		1	STRAIGHT COUPLING,EXT.THREADED 8/6-R1/2"	
260	342921-0115		1	STRAIGHT COUPLING,EXT.THREADED 6/4-G3/8"	
270	352103-0101		2	CABLE GLAND, ST 9, PR15,2/PG9	
320	90166-0118	MM	900	TUBE 8 MM PA BLACK	
330	2550945-0000		1	WATER DIAGRAM	
360	90140-0023		2	T-PIPE, INT. THREAD, NO. 2070-3/8-3/8	
370	90187-0089		1	BALL VALVE G3/8, NPBR	
380	342700-0111		1	NIPPLES,HEXAGON,EXT.G-THREAD G3/8"-G3/8"	
390	90163-0041		1	HOSE NIPPLE, EXT.THR. 3/8-12 MM	
400	90140-0020		1	ELBOW, 90, INT/EXT. THREAD, NO. 2020-3/8	
Common Parts					
030	1041932-0000		1	PIPE	
040	1041933-0000		1	PIPE	
050	1037583-0000		1	HOLDER	
060	90458-0921		2	FILTER SP 122-200	
	90458-2541		*1*	*FILTER, CP23174-7-304SS*	
070	90187-0029		4	BALL VALVE G1/2, NPBR	
080	479261-0000		4	NIPPLE	
090	312105-0370		2	SCREW M6S ISO 4017 M6X20 A480	
100	315125-0153		2	WASHER TBRSB 6,4X22X4 A4	
110	342720-0114		6	CONN. STR. GA-15-G1/2	
120	90043-0006		1	PRESSURE GAUGE, 2041 D=63 MM	
130	342701-0202		1	BUSHING,INT./EXT.G-THREAD G3/8"-G1/8"	
150	315239-0113		18	NYLON WASHER G1/2, 1/2RRP	
160	315239-0109		1	NYLON WASHER G1/8, 1/8RRP	
170	342901-0105		1	HOSE NIPPLE, EXT.THR. R1/2-12 MM	
210	273455-0000		1	SIGN, COLD WATER	
220	312502-0120		2	DRIVE SCREW ROUND HEAD KDS 0X5	
240	90157-0016		1	LOCKING FLUID LOCTITE 242 50 ML	
250	342930-0133		1	ELBOW 90 COUPL.,EXT.THREADED 10/8-R3/8"	
350	2547061-0000		1	HOLDER	
410	342708-0109		7	REINFORCING RING VSH 15X1 MM	
B 2102	90274-0042		1	PRESSURE GUARD, 200 KPA	
W 2220	351150-0403	MM	2000	CABLE OLFLEX 3X0,75 MM2 LIGHT/GREY	
W 2243	351150-0403	MM	2000	CABLE OLFLEX 3X0,75 MM2 LIGHT/GREY	
Y 2108	90042-0249		1	SOLENOID VALVE OFFICINE DI ENSINO	

Machine Type	Group Description	Used-In	Group Number	Page No

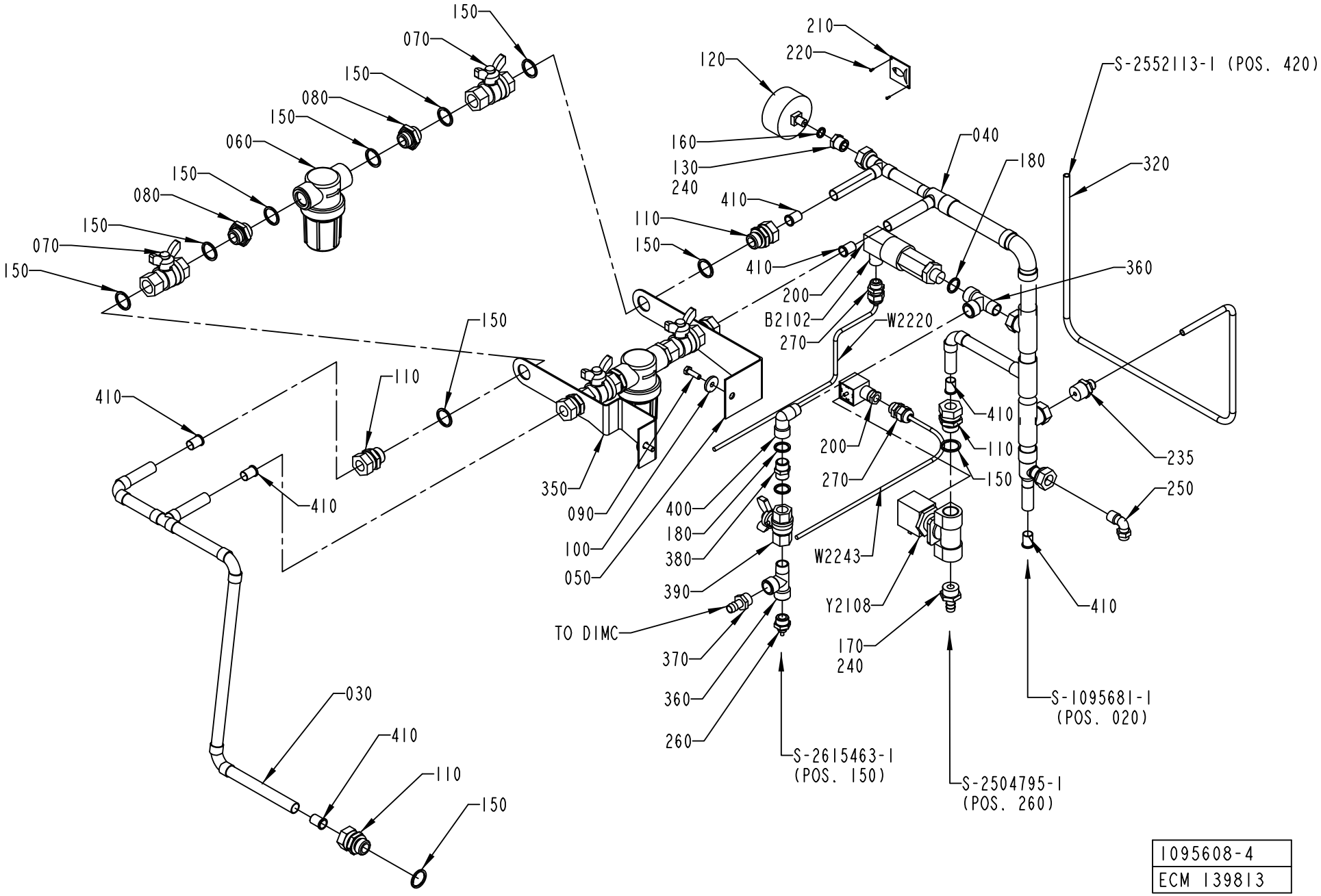

1095608-4
ECM 139813

ECM: 339610 - 20090402
Group number: 1095608-0100
Assembly Drawing: 1095608-4_1_AC

This list covers pages from 7-70 to 7-73

Pos	Part No	UN	Qty	Description	Page No
A3/FLEX COMPRESSOR (See drawing on page: 7-70)					
165	342901-0102		1	HOSE NIPPLE, EXT.THR. R1/4-7 MM	
175	90330-0085		1	BUSHING, INT/EXT. THR. R1/2-RP1/4	
180	315239-0111		3	NYLON WASHER G3/8, 3/8RRP	
200	90110-0095		1	CONNECTOR 3 POLE + EARTH	
260	342921-0115		1	STRAIGHT COUPLING,EXT.THREADED 6/4-G3/8"	
270	352103-0101		2	CABLE GLAND, ST 9, PR15,2/PG9	
330	2550944-0000		1	WATER DIAGRAM	
360	90140-0023		2	T-PIPE, INT. THREAD, NO. 2070-3/8-3/8	
370	90187-0089		1	BALL VALVE G3/8, NPBR	
380	342700-0111		1	NIPPLES,HEXAGON,EXT.G-THREAD G3/8"-G3/8"	
390	90163-0041		1	HOSE NIPPLE, EXT.THR. 3/8-12 MM	
400	90140-0020		1	ELBOW, 90, INT/EXT. THREAD, NO. 2020-3/8	
A3/FLEX ICE-WATER (See drawing on page: 7-72)					
180	315239-0111		3	NYLON WASHER G3/8, 3/8RRP	
200	90110-0095		1	CONNECTOR 3 POLE + EARTH	
235	342920-0124		1	STRAIGHT COUPLING,EXT.THREADED 8/6-R1/2"	
260	342921-0115		1	STRAIGHT COUPLING,EXT.THREADED 6/4-G3/8"	
270	352103-0101		2	CABLE GLAND, ST 9, PR15,2/PG9	
320	90166-0118	MM	900	TUBE 8 MM PA BLACK	
330	2550945-0000		1	WATER DIAGRAM	
360	90140-0023		2	T-PIPE, INT. THREAD, NO. 2070-3/8-3/8	
370	90187-0089		1	BALL VALVE G3/8, NPBR	
380	342700-0111		1	NIPPLES,HEXAGON,EXT.G-THREAD G3/8"-G3/8"	
390	90163-0041		1	HOSE NIPPLE, EXT.THR. 3/8-12 MM	
400	90140-0020		1	ELBOW, 90, INT/EXT. THREAD, NO. 2020-3/8	
Common Parts					
030	1041932-0000		1	PIPE	
040	1041933-0000		1	PIPE	
050	1037583-0000		1	HOLDER	
060	90458-0921		2	FILTER SP 122-200	
	90458-2541		*1*	*FILTER, CP23174-7-304SS*	
070	90187-0029		4	BALL VALVE G1/2, NPBR	
080	479261-0000		4	NIPPLE	
090	312105-0370		2	SCREW M6S ISO 4017 M6X20 A480	
100	315125-0153		2	WASHER TBRSB 6,4X22X4 A4	
110	342720-0114		6	CONN. STR. GA-15-G1/2	
120	90043-0006		1	PRESSURE GAUGE, 2041 D=63 MM	
130	342701-0202		1	BUSHING,INT./EXT.G-THREAD G3/8"-G1/8"	
150	315239-0113		18	NYLON WASHER G1/2, 1/2RRP	
160	315239-0109		1	NYLON WASHER G1/8, 1/8RRP	
170	342901-0105		1	HOSE NIPPLE, EXT.THR. R1/2-12 MM	
210	273455-0000		1	SIGN, COLD WATER	
220	312502-0120		2	DRIVE SCREW ROUND HEAD KDS 0X5	
240	90157-0016		1	LOCKING FLUID LOCTITE 242 50 ML	
250	342930-0133		1	ELBOW 90 COUPL.,EXT.THREADED 10/8-R3/8"	
350	2547061-0000		1	HOLDER	
410	342708-0109		7	REINFORCING RING VSH 15X1 MM	
B 2102	90274-0042		1	PRESSURE GUARD, 200 KPA	
W 2220	351150-0403	MM	2000	CABLE OLFLEX 3X0,75 MM2 LIGHT/GREY	
W 2243	351150-0403	MM	2000	CABLE OLFLEX 3X0,75 MM2 LIGHT/GREY	
Y 2108	90042-0249		1	SOLENOID VALVE OFFICINE DI ENSINO	

Machine Type	Group Description	Used-In	Group Number	Page No

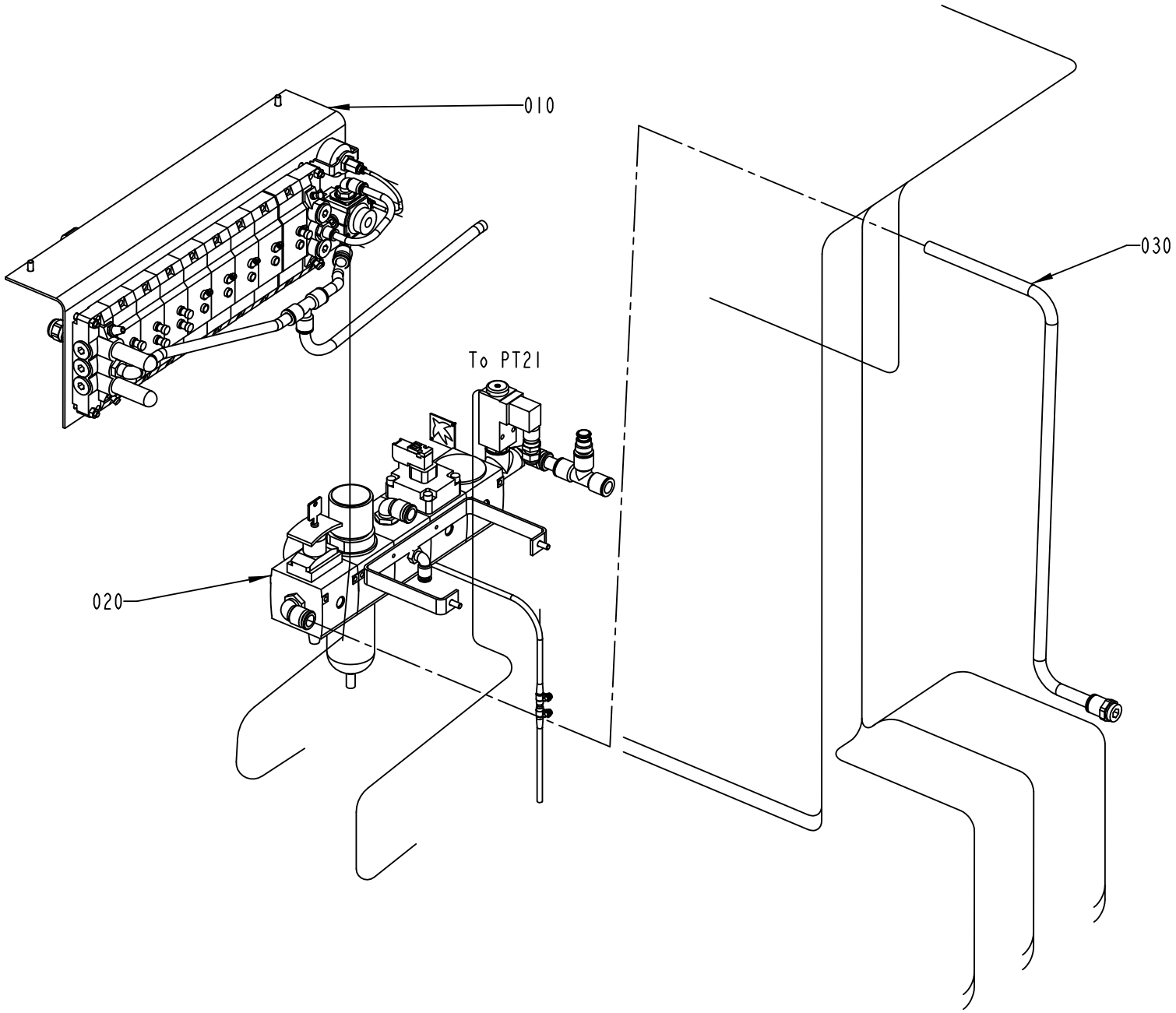

1095714-2
ECM 115191

ECM: 139561 - 20030711
Group number: 1095714-0300
Assembly Drawing: 1095714-2_1_AD

Pos	Part No	UN	Qty	Description	Page No
-					
010	1095611-0300		1	VALVE PANEL	**7-77**
020	1095609-0200		1	PNEUMATIC UNIT	**7-79**
030	1095716-0100		1	PIPE WORK-AIR	**7-81**

Pos	Part No	UN	Qty	Description	Page No

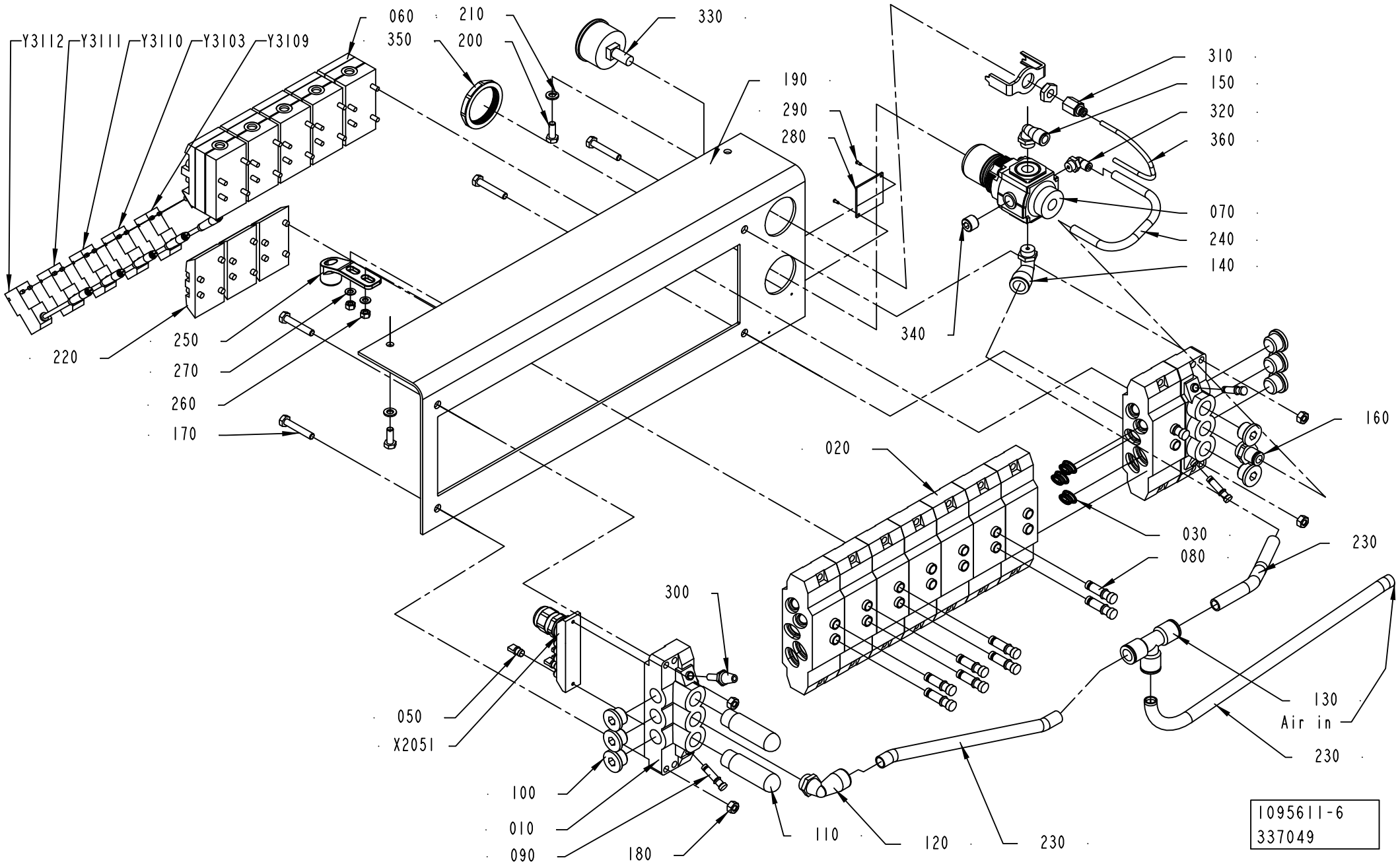
Y3112
Y3111
Y3110
Y3103
Y3109
060
350
210
200
330
190
290
280
310
150
320
360
070
240
140
340
220
250
270
260
170
020
160
030
080
230
300
050
X2051
100
010
090
180
110
120
230
130
Air in
230
1095611-6
337049

ECM: 384872 - 20090402
Group number: 1095611-0300
Assembly Drawing: 1095611-6_1_AD

Pos	Part No	UN	Qty	Description	Page No
A3/FLEX					
005	2551119-0000		1	PNEUMATIC DIAGRAM	
060	90042-0215		5	VALVE BODY 5/2 UNISTABLE	
080	342715-0103		11	BLIND PLUG 8 MM	
220	90042-0519		3	BLANK PLATE ISO SIZE 1	
250	1538868-0000		1	BRACKET	
Y3110	90042-0538		1	PILOT VALVE L=500MM	
Common Parts					
010	90042-0522		2	PORTED END PIECE ISO SIZE 1	
020	90042-0532		8	BASE PLATE ISO SIZE 1	
030	90042-0528		1	BLANKING KIT SEALS ISO SIZE 1	
050	90042-0550		5	PROTECTION PLUG FOR UNUSED CONNECTION	
070	90113-0470		1	MANIFOLD REGULATOR 10 BAR	
090	342715-0102		3	BLIND PLUG 6 MM	
100	342713-0211		8	PLUG, EXT THREAD HEX SOCKET 8638-00-380	
110	90328-0024		2	SILENCER G3/8"	
120	90458-2960		1	ELBOW PIPE JOINT, EXT.THREAD,D=12MM-G3/8	
130	342748-0109		1	T-CONNECTION 12MM	
140	90459-2959		1	COOLER, AIR14616.30.CU.10.AL.06.10.0150.	
150	90458-2958		1	ELBOW PIPE JOINT, EXT.THREAD, D=8MM-G1/4	
160	342722-0206		1	STRAIGHT COUPLING D=8-G3/8"	
170	312105-0376		4	SCREW M6S ISO 4014 M6X35 A480	
180	312605-0316		4	HEXAGON NUT, M6M M6 A280	
190	1517295-0000		1	SHEET	
200	312105-0368		2	SCREW M6S ISO 4017 M6X16 A480	
210	315105-0153		2	WASHER BRB 6,4X12 RFR	
230	90166-0068	MM	1000	TUBE 12 MM PA BLUE	
240	315400-0004	MM	400	TUBE PUN-H-8X1,25-BL	
260	312605-0314		2	HEXAGON NUT, M6M M5 A280	
270	315105-0146		2	WASHER BRB 5,3X10 RFR	
280	1041938-0000		1	SIGN	
290	312502-0120		2	DRIVE SCREW ROUND HEAD KDS 0X5	
300	90328-0017		1	SILENCER, D=6 MM	
310	342770-0101		1	RAIGHT COUPLING INT, D=4 MM - G1/8	
320	90458-2955		1	ELBOW PIPE JOINT, EXT.THREAD,	
330	90043-0065		1	MKC NEW FILL PUMP VACUUM PRESSURE GAUGE	
340	90087-0036		1	PLUG, KR 1/4	
350	90457-0078		1	PANEL NUT	
360	90166-0095	MM	200	TUBE 4 MM PA BLUE (50M)	
X2051	90042-0535		1	TERMINAL BOARD 19 CORDS	
Y3103	90042-0538		1	PILOT VALVE L=500MM	
Y3109	90042-0538		1	PILOT VALVE L=500MM	
Y3111	90042-0538		1	PILOT VALVE L=500MM	
Y3112	90042-0538		1	PILOT VALVE L=500MM	

Machine Type	Group Description	Used-In	Group Number	Page No

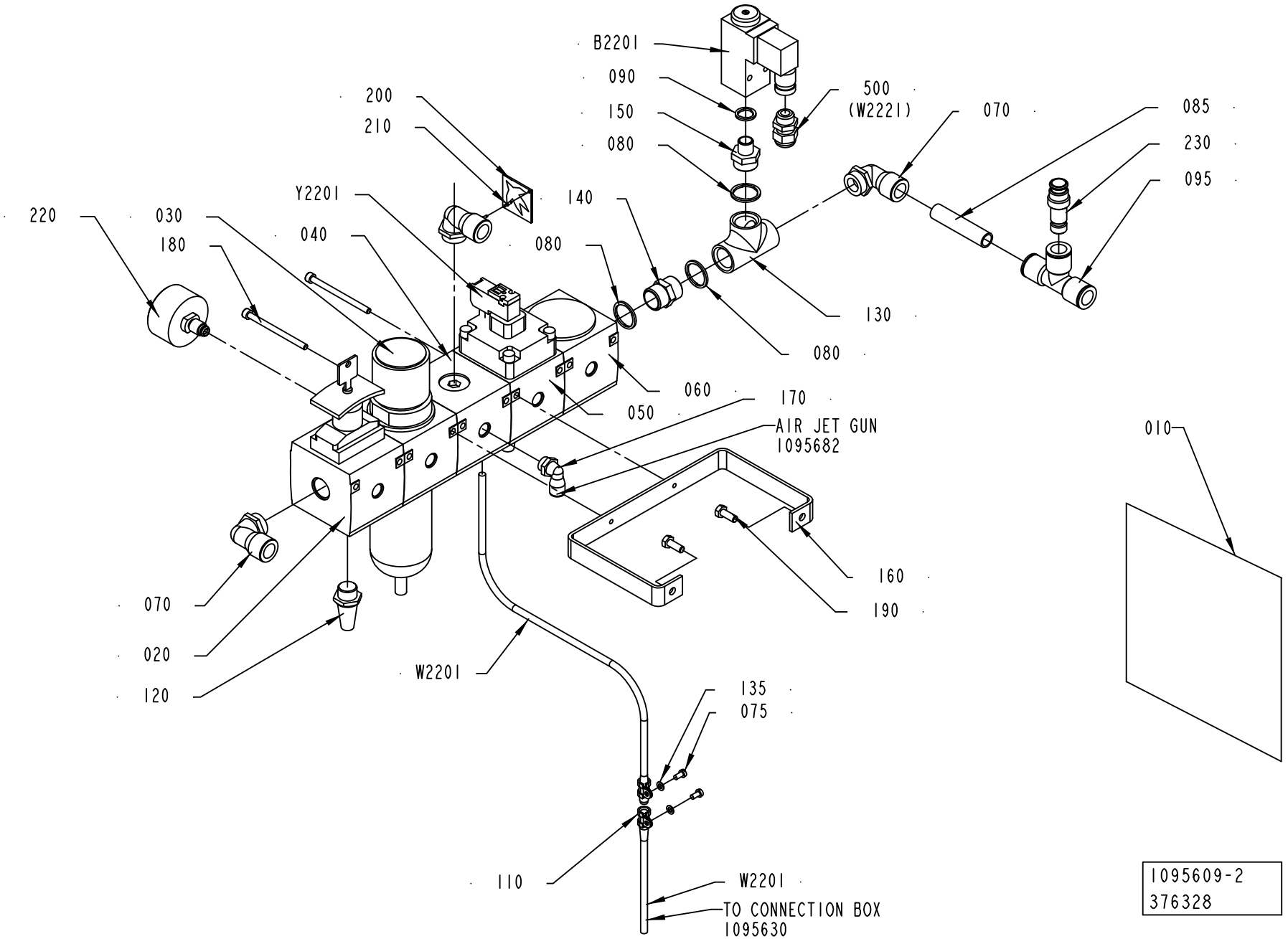
B2201
090
150
080
500
(W2221)
070
085
230
095
200
210
Y2201
140
220
030
180
040
080
130
080
060
050
170
AIR JET GUN
1095682
010
160
190
070
020
120
W2201
135
075
110
W2201
TO CONNECTION BOX
1095630
1095609-2
376328

ECM: 384870 - 20090402
Group number: 1095609-0200
Assembly Drawing: 1095609-2_1_AH

Pos	Part No	UN	Qty	Description	Page No
A3/FLEX					
010	2527368-0000		1	PNEUMATIC DIAGRAM	
Common Parts					
020	90113-0377		1	SHUT OFF VALVE G1/2, 915-331053	
030	90113-0072		1	FILTER REGULATOR 40µ, 915-331242	
	90113-0459		*1*	*O-RING*	
	90113-0387		*1*	*FILTER ELEMENT 40UM FOR 90113-0094*	
040	90113-0375		1	PRESSURE DISTRIBUTION	
050	90113-0423		1	HIGH SPEED VENTING VALVE G1/2, R40403053	
060	90113-0374		1	SLOW STARTING VALVE	
070	90458-2965		3	ELBOW PIPE JOINT, EXT.THREAD,D=14MM-G1/2	
075	312125-0287		2	SCREW ISO 1207 M4X8 A4	
080	315239-0113		3	NYLON WASHER G1/2, 1/2RRP	
085	90166-0196	MM	70	TUBE 14MM PA BLUE	
090	315239-0110		1	NYLON WASHER G1/4, 1/4RRP	
095	342748-0110		1	T-CONNECTION 14MM	
110	90165-0065		2	PIPE CLAMP D=8 MM, GSK08/12	
120	90328-0007		1	SILENCER, 0670 00 17	
130	90330-0049		1	T-PIPE, INT. THREAD, R-221R1/2	
135	315105-0136		2	WASHER BRB 4,3X8 RFR	
140	342700-0113		1	NIPPLES,HEXAGON,EXT.G-THREAD G1/2"-G1/2"	
150	342700-0205		1	NIPPLES,HEXAGON,EXT.G-THREAD G1/2"-G1/4"	
160	1041921-0000		1	HOLDER	
170	90458-2958		1	ELBOW PIPE JOINT, EXT.THREAD, D=8MM-G1/4	
180	90287-0073		2	SCREW MC6S M5X70 129	
190	312105-0368		2	SCREW M6S ISO 4017 M6X16 A480	
200	273458-0000		1	SIGN, AIR	
210	312502-0120		2	DRIVE SCREW ROUND HEAD KDS 0X5	
220	90459-0307		1	PRESSURE GAUGE, 162838 MA-50-10-1/4-EN	
230	342716-0211		1	REDUCER 12-14	
500	352103-0101		1	CABLE GLAND, ST 9, PR15,2/PG9	
B2201	90274-0074		1	PRESS. SW. 5,3 BAR, PEV-1/4-B-SA22357	
W2201	90042-0583		1	CABLE MECMAN 440-827 000-1	
Y2201	90042-0585		1	PILOT VALVE L=5M	

Pos	Part No	UN	Qty	Description	Page No

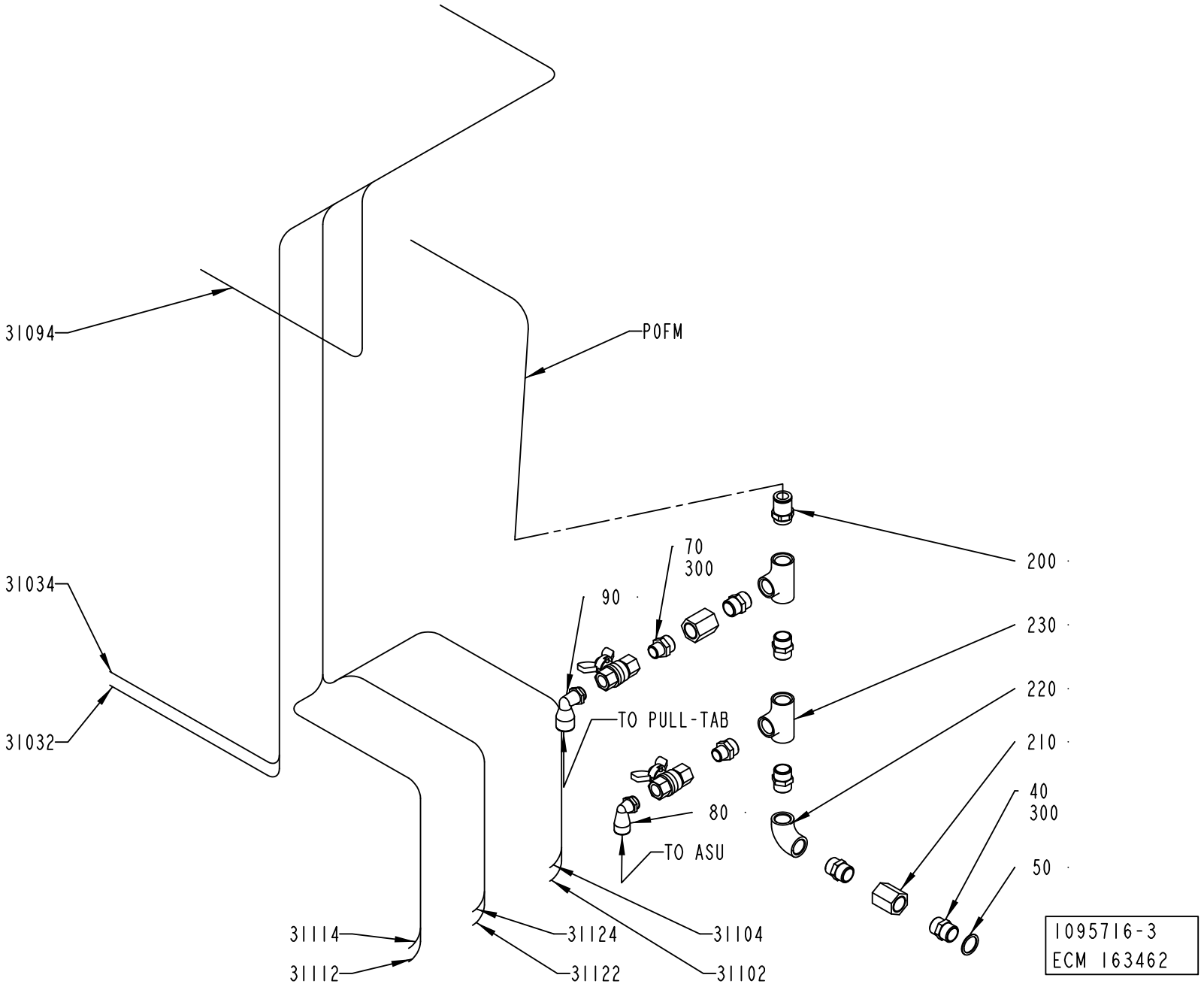
31094
POFM
31034
31032
70
300
90
200
230
220
210
40
300
50
TO PULL-TAB
80
TO ASU
31114
31112
31124
31122
31104
31102
1095716-3
ECM 163462

ECM: 189444 - 20041104
Group number: 1095716-0100
Assembly Drawing: 1095716-3_1_AB

Pos	Part No	UN	Qty	Description	Page No
A3/FLEX					
040	342700-0113		5	NIPPLES,HEXAGON,EXT.G-THREAD G1/2"-G1/2"	
050	315233-0113		1	WASHER CAPTIVE SEALING G1/2	
070	342700-0206		2	NIPPLES,HEXAGON,EXT.G-THREAD G1/2"-G3/8"	
080	90458-2960		1	ELBOW PIPE JOINT, EXT.THREAD,D=12MM-G3/8	
090	90458-2963		1	ELBOW PIPE JOINT, EXT.THREAD,D=14MM-G3/8	
200	90055-0097		1	STRAIGHT COUPLING	
210	90140-0079		2	SLEEVE, INT. THREAD, NO. 501-08	
220	90330-0020		1	ELBOW, 90 INT. THREAD, R-2221/2	
230	90330-0049		2	T-PIPE, INT. THREAD, R-221R1/2	
300	90144-0007		1	TAPE	
P0FM	90166-0196	MM	770	TUBE 14MM PA BLUE	
Common Parts					
31032	90166-0013	MM	1400	TUBE 8 MM PA BLUE	
31034	90166-0013	MM	1400	TUBE 8 MM PA BLUE	
31094	90166-0013	MM	1400	TUBE 8 MM PA BLUE	
31112	90166-0013	MM	1500	TUBE 8 MM PA BLUE	
31114	90166-0013	MM	1500	TUBE 8 MM PA BLUE	
31122	90166-0013	MM	1500	TUBE 8 MM PA BLUE	
31124	90166-0013	MM	1500	TUBE 8 MM PA BLUE	

Pos	Part No	UN	Qty	Description	Page No

Tetra Pak

SPC

Spare Parts Catalogue

Tetra Pak A3/Flex

648575-0150

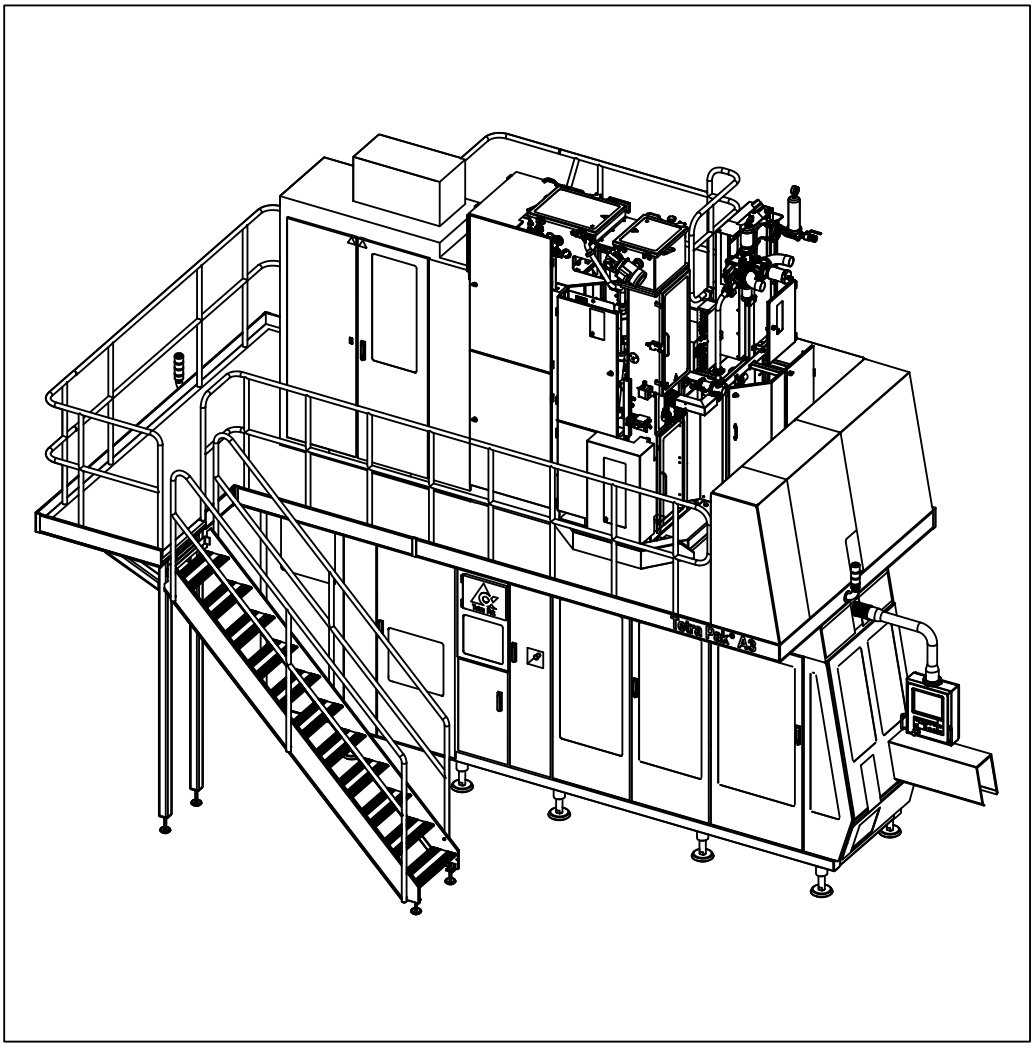

Tetra Pak

Doc. No: SPC-2851301-0117

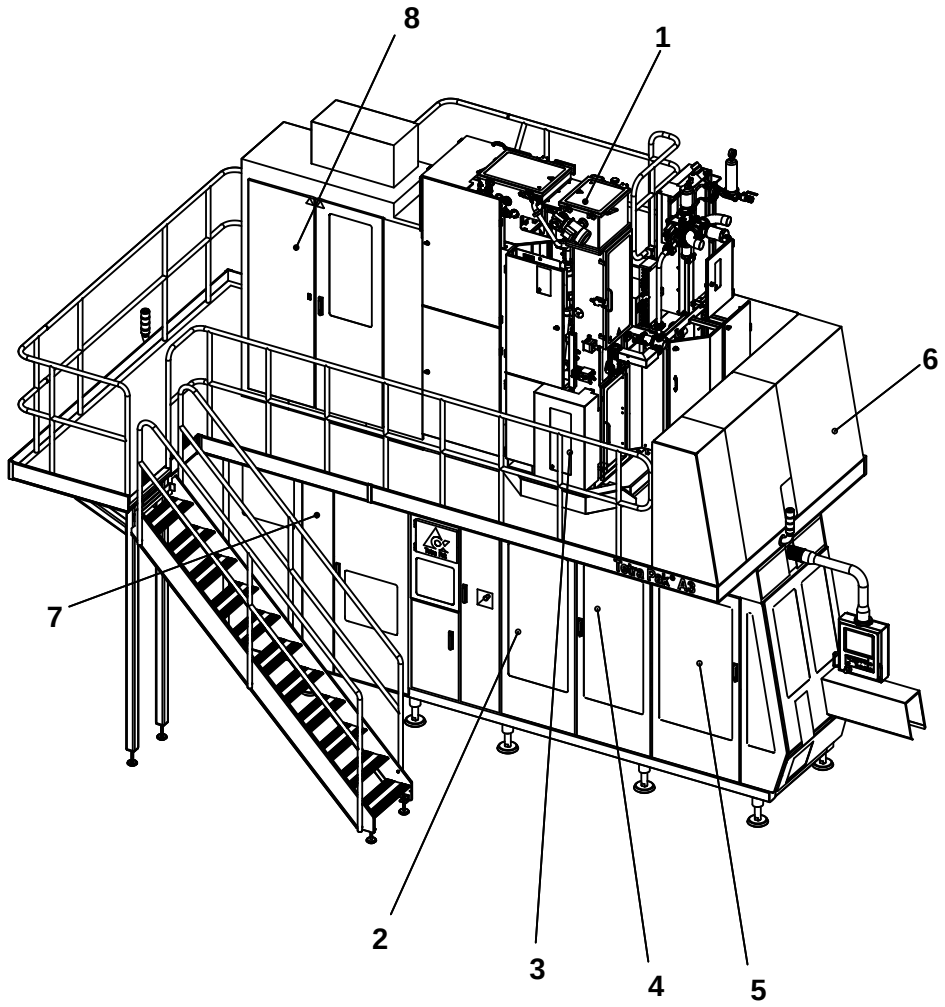

The position numbers in the illustration correspond with the chapter numbers listed on the next page.

Copyright © 2009 Tetra Pak Group

All rights reserved. No part of this document may be reproduced or copied in any form or by any means without written permission from Tetra Pak Packaging Solutions .

Tetra Pak and all Tetra Pak products are trademarks belonging to the Tetra Pak Group.

The content of this manual is in accordance with the design and construction of the machine or equipment at the time of publishing. Tetra Pak reserves the right to introduce design modifications without prior notice.

This document was produced by:

Tetra Pak Packaging Solutions
Via Delfini 1
411 00 Modena
ITALY

Additional copies can be ordered from Tetra Pak. When ordering additional copies, always provide the document number.

Doc. No. SPC-2851301-0117

Issue 2009-09

This document is valid from:

21211/00480

Series No/Machine No Sign.

SPC

Spare Parts Catalogue

Tetra Pak A3/Flex
648575-0150

BINDER 1
- i Introduction
- 1 Superstructure
- 2 Machine Body
- 3 Drive Unit

BINDER 2
- 4 Jaw System
- 5 Final Folder
- 6 Final Folder TGA
- 7 Service Unit

BINDER 3
- 8 Automatic Splicing Unit
- 9 Electrical Cabinet
- 10 Regular Accessories
- 11 Optional Accessories
- ii Part Number Index
- iii Ref. Des. Parts Index

Machine or equipment configurations that this catalogue is valid for are described on the next page.

Doc. No: SPC-2851301-0117

Issue 2009-09

Tetra Pak

Tetra Pak Packaging Solutions

Valid for:

Name	Drawing Specification and Development Step	Additional Information
Tetra Pak A3/Flex	648575-0150	-

SPC
Spare Parts Catalogue

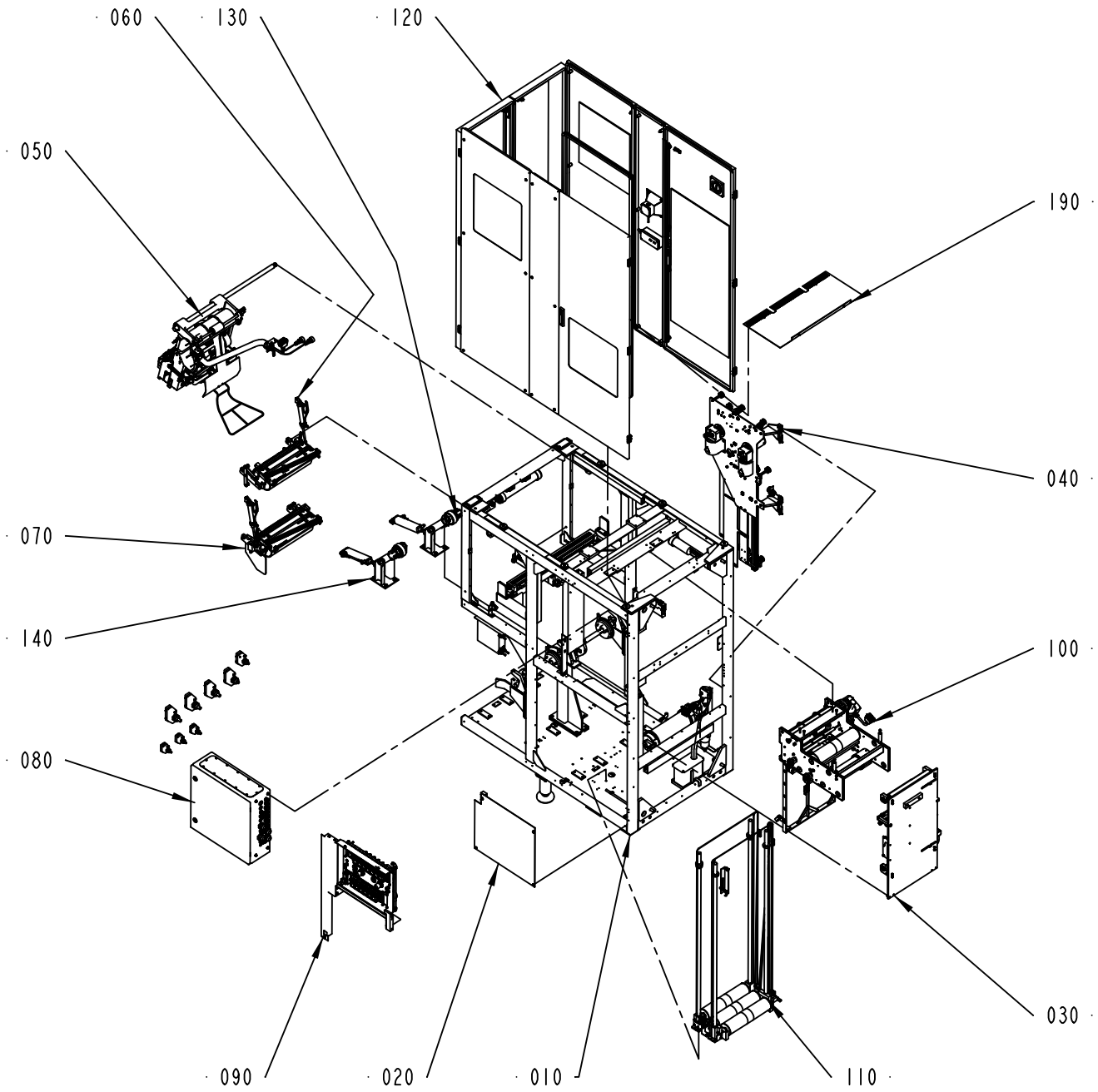
060
130
120
050
190
040
070
140
100
080
030
090
020
010
110
648528-5
ECM 266354

ECM: 342873 - 20080215
Group number: 648528-0200
Assembly Drawing: 648528-5_1_AD

This list covers pages from 8-2 to 8-9

Pos	Part No	UN	Qty	Description	Page No
A3/FLEX SEPROOM WITH ARL (See drawing on page: 8-8)					
020	2832865-0100		1	COVER	**8-11**
030	2506668-0200		1	STRIP APPLICATOR	**8-13**
190	2613749-0100		1	COVER	**8-33**
200	2760125-0100		1	SEPARATE ROOM	**8-35, 8-37, 8-39**
210	2538072-0100		1	AUTOMATIC REEL LOADING	**8-97**
A3/FLEX SEPROOM WITHOUT ARL (See drawing on page: 8-6)					
020	2832865-0100		1	COVER	**8-11**
030	2506668-0200		1	STRIP APPLICATOR	**8-13**
130	2506614-0100		1	BOBBIN BRAKE	**8-107**
140	2506615-0100		1	BOBBIN BRAKE	**8-109**
190	2613749-0100		1	COVER	**8-33**
200	2760125-0100		1	SEPARATE ROOM	**8-35, 8-37, 8-39**
A3/FLEX ASU WITH ARL (See drawing on page: 8-4)					
020	2832865-0100		1	COVER	**8-11**
030	2506668-0200		1	STRIP APPLICATOR	**8-13**
190	2613749-0100		1	COVER	**8-33**
210	2538072-0100		1	AUTOMATIC REEL LOADING	**8-97**
A3/FLEX ASU WITHOUT ARL (See drawing on page: 8-2)					
020	2832865-0100		1	COVER	**8-11**
030	2506668-0200		1	STRIP APPLICATOR	**8-13**
130	2506614-0100		1	BOBBIN BRAKE	**8-107**
140	2506615-0100		1	BOBBIN BRAKE	**8-109**
190	2613749-0100		1	COVER	**8-33**
Common Parts					
010	1487560-0200		1	MACHINE BODY	**8-111, 8-113, 8-115, 8-117**
040	1484707-0200		1	STRIP MAGAZINE	**8-133**
050	2588946-0100		1	SPLICING DEVICE	**8-149, 8-151**
060	2588422-0100		1	MATERIAL HOLDER L1	**8-179, 8-181**
070	2588423-0100		1	MATERIAL HOLDER L2	**8-189, 8-191**
080	1548491-0200		1	ELECTRICAL CABINET	**8-199, 8-201, 8-203, 8-205, 8-207, 8-209, 8-211, 8-213, 8-215, 8-217**
090	2564633-0100		1	VALVE PANEL	**8-231, 8-233**
100	1487808-0200		1	BRACKET	**8-241**
110	1490831-0200		1	MAGAZINE	**8-251, 8-253**
120	1490215-0200		1	COVERING PANEL	**8-257, 8-259, 8-261, 8-263**

Pos	Part No	UN	Qty	Description	Page No

Machine Type | Group Description | Used-In | Group Number | Page No

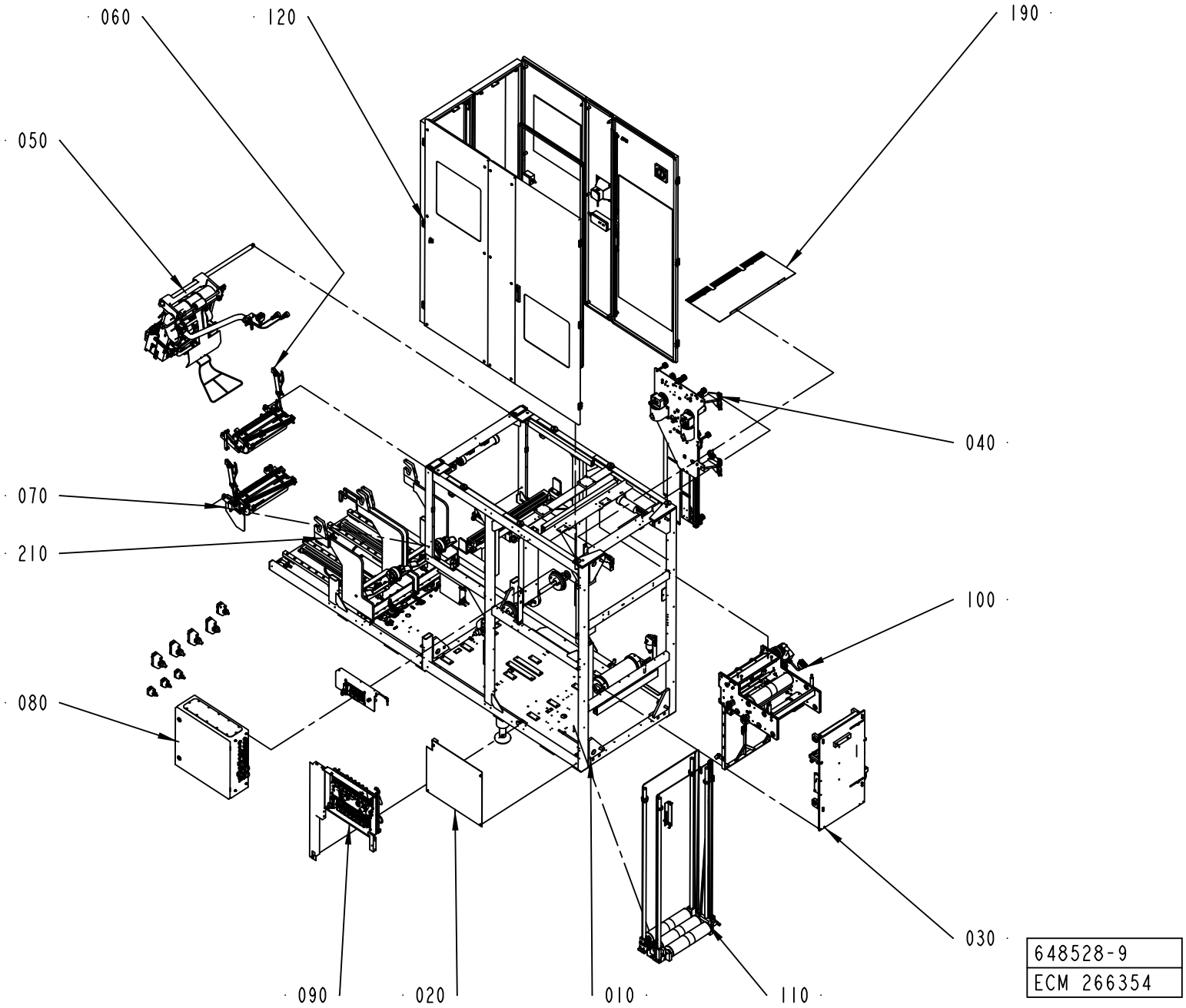
060
120
190
050
040
070
210
100
080
030
090
020
010
110
648528-9
ECM 266354

ECM: 342873 - 20080215
Group number: 648528-0200
Assembly Drawing: 648528-9_1_AB

This list covers pages from 8-2 to 8-9

Pos	Part No	UN	Qty	Description	Page No
A3/FLEX SEPROOM WITH ARL (See drawing on page: 8-8)					
020	2832865-0100		1	COVER	**8-11**
030	2506668-0200		1	STRIP APPLICATOR	**8-13**
190	2613749-0100		1	COVER	**8-33**
200	2760125-0100		1	SEPARATE ROOM	**8-35, 8-37, 8-39**
210	2538072-0100		1	AUTOMATIC REEL LOADING	**8-97**
A3/FLEX SEPROOM WITHOUT ARL (See drawing on page: 8-6)					
020	2832865-0100		1	COVER	**8-11**
030	2506668-0200		1	STRIP APPLICATOR	**8-13**
130	2506614-0100		1	BOBBIN BRAKE	**8-107**
140	2506615-0100		1	BOBBIN BRAKE	**8-109**
190	2613749-0100		1	COVER	**8-33**
200	2760125-0100		1	SEPARATE ROOM	**8-35, 8-37, 8-39**
A3/FLEX ASU WITH ARL (See drawing on page: 8-4)					
020	2832865-0100		1	COVER	**8-11**
030	2506668-0200		1	STRIP APPLICATOR	**8-13**
190	2613749-0100		1	COVER	**8-33**
210	2538072-0100		1	AUTOMATIC REEL LOADING	**8-97**
A3/FLEX ASU WITHOUT ARL (See drawing on page: 8-2)					
020	2832865-0100		1	COVER	**8-11**
030	2506668-0200		1	STRIP APPLICATOR	**8-13**
130	2506614-0100		1	BOBBIN BRAKE	**8-107**
140	2506615-0100		1	BOBBIN BRAKE	**8-109**
190	2613749-0100		1	COVER	**8-33**
Common Parts					
010	1487560-0200		1	MACHINE BODY	**8-111, 8-113, 8-115, 8-117**
040	1484707-0200		1	STRIP MAGAZINE	**8-133**
050	2588946-0100		1	SPLICING DEVICE	**8-149, 8-151**
060	2588422-0100		1	MATERIAL HOLDER L1	**8-179, 8-181**
070	2588423-0100		1	MATERIAL HOLDER L2	**8-189, 8-191**
080	1548491-0200		1	ELECTRICAL CABINET	**8-199, 8-201, 8-203, 8-205, 8-207, 8-209, 8-211, 8-213, 8-215, 8-217**
090	2564633-0100		1	VALVE PANEL	**8-231, 8-233**
100	1487808-0200		1	BRACKET	**8-241**
110	1490831-0200		1	MAGAZINE	**8-251, 8-253**
120	1490215-0200		1	COVERING PANEL	**8-257, 8-259, 8-261, 8-263**

Pos	Part No	UN	Qty	Description	Page No

Machine Type | Group Description | Used-In | Group Number | Page No

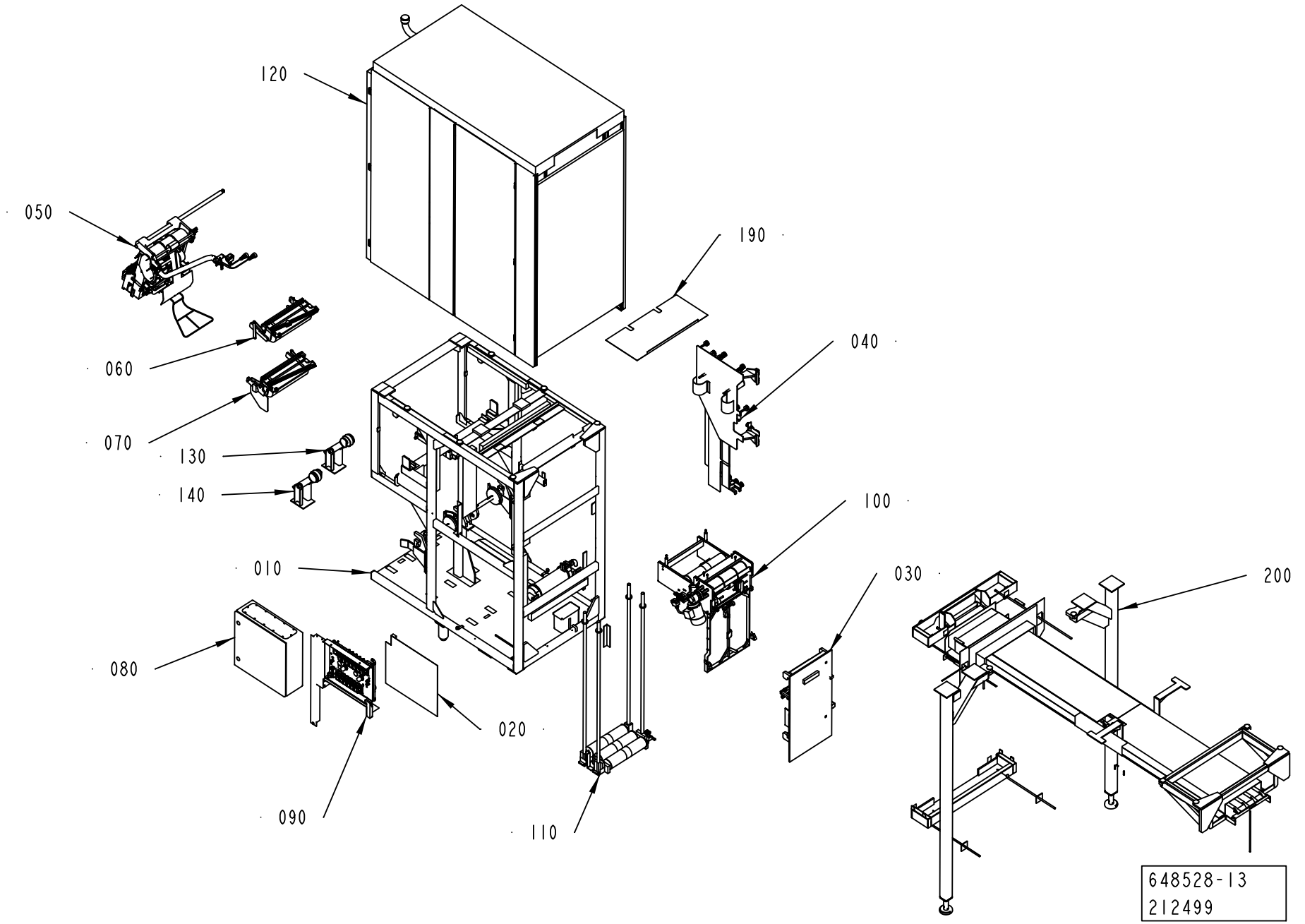
120
050
190
060
040
070
130
140
100
010
030
200
080
020
090
110
648528-13
212499

ECM: 342873 - 20080215
Group number: 648528-0200
Assembly Drawing: 648528-13_1_AA

This list covers pages from 8-2 to 8-9

Pos	Part No	UN	Qty	Description	Page No
A3/FLEX SEPROOM WITH ARL (See drawing on page: 8-8)					
020	2832865-0100		1	COVER	**8-11**
030	2506668-0200		1	STRIP APPLICATOR	**8-13**
190	2613749-0100		1	COVER	**8-33**
200	2760125-0100		1	SEPARATE ROOM	**8-35, 8-37, 8-39**
210	2538072-0100		1	AUTOMATIC REEL LOADING	**8-97**
A3/FLEX SEPROOM WITHOUT ARL (See drawing on page: 8-6)					
020	2832865-0100		1	COVER	**8-11**
030	2506668-0200		1	STRIP APPLICATOR	**8-13**
130	2506614-0100		1	BOBBIN BRAKE	**8-107**
140	2506615-0100		1	BOBBIN BRAKE	**8-109**
190	2613749-0100		1	COVER	**8-33**
200	2760125-0100		1	SEPARATE ROOM	**8-35, 8-37, 8-39**
A3/FLEX ASU WITH ARL (See drawing on page: 8-4)					
020	2832865-0100		1	COVER	**8-11**
030	2506668-0200		1	STRIP APPLICATOR	**8-13**
190	2613749-0100		1	COVER	**8-33**
210	2538072-0100		1	AUTOMATIC REEL LOADING	**8-97**
A3/FLEX ASU WITHOUT ARL (See drawing on page: 8-2)					
020	2832865-0100		1	COVER	**8-11**
030	2506668-0200		1	STRIP APPLICATOR	**8-13**
130	2506614-0100		1	BOBBIN BRAKE	**8-107**
140	2506615-0100		1	BOBBIN BRAKE	**8-109**
190	2613749-0100		1	COVER	**8-33**
Common Parts					
010	1487560-0200		1	MACHINE BODY	**8-111, 8-113, 8-115, 8-117**
040	1484707-0200		1	STRIP MAGAZINE	**8-133**
050	2588946-0100		1	SPLICING DEVICE	**8-149, 8-151**
060	2588422-0100		1	MATERIAL HOLDER L1	**8-179, 8-181**
070	2588423-0100		1	MATERIAL HOLDER L2	**8-189, 8-191**
080	1548491-0200		1	ELECTRICAL CABINET	**8-199, 8-201, 8-203, 8-205, 8-207, 8-209, 8-211, 8-213, 8-215, 8-217**
090	2564633-0100		1	VALVE PANEL	**8-231, 8-233**
100	1487808-0200		1	BRACKET	**8-241**
110	1490831-0200		1	MAGAZINE	**8-251, 8-253**
120	1490215-0200		1	COVERING PANEL	**8-257, 8-259, 8-261, 8-263**

Pos	Part No	UN	Qty	Description	Page No

Machine Type | Group Description | Used-In | Group Number | Page No

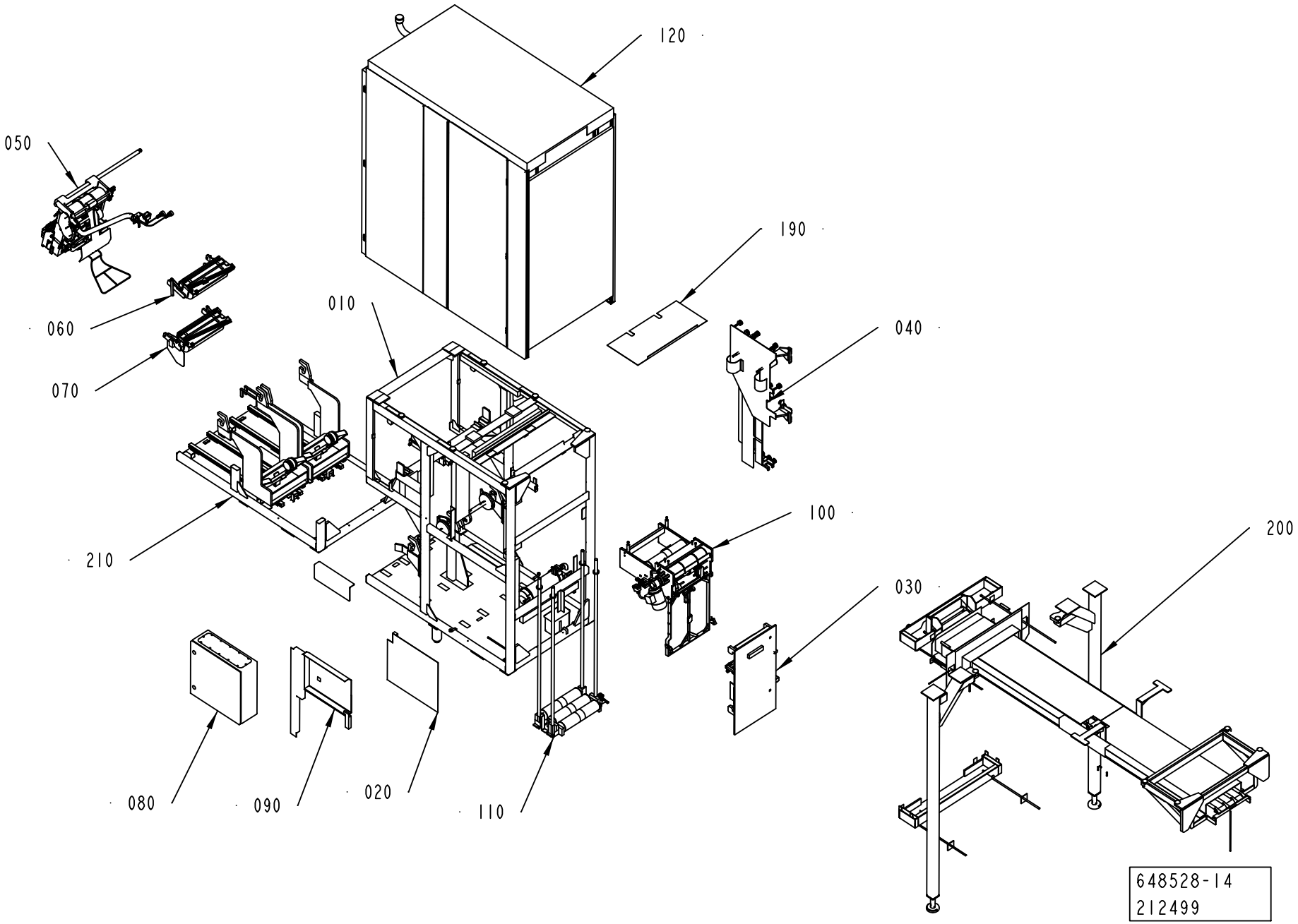
120
050
190
010
060
040
070
210
100
200
030
080
090
020
110
648528-14
212499

ECM: 342873 - 20080215
Group number: 648528-0200
Assembly Drawing: 648528-14_1_AA

This list covers pages from 8-2 to 8-9

Pos	Part No	UN	Qty	Description	Page No
A3/FLEX SEPROOM WITH ARL (See drawing on page: 8-8)					
020	2832865-0100		1	COVER	**8-11**
030	2506668-0200		1	STRIP APPLICATOR	**8-13**
190	2613749-0100		1	COVER	**8-33**
200	2760125-0100		1	SEPARATE ROOM	**8-35, 8-37, 8-39**
210	2538072-0100		1	AUTOMATIC REEL LOADING	**8-97**
A3/FLEX SEPROOM WITHOUT ARL (See drawing on page: 8-6)					
020	2832865-0100		1	COVER	**8-11**
030	2506668-0200		1	STRIP APPLICATOR	**8-13**
130	2506614-0100		1	BOBBIN BRAKE	**8-107**
140	2506615-0100		1	BOBBIN BRAKE	**8-109**
190	2613749-0100		1	COVER	**8-33**
200	2760125-0100		1	SEPARATE ROOM	**8-35, 8-37, 8-39**
A3/FLEX ASU WITH ARL (See drawing on page: 8-4)					
020	2832865-0100		1	COVER	**8-11**
030	2506668-0200		1	STRIP APPLICATOR	**8-13**
190	2613749-0100		1	COVER	**8-33**
210	2538072-0100		1	AUTOMATIC REEL LOADING	**8-97**
A3/FLEX ASU WITHOUT ARL (See drawing on page: 8-2)					
020	2832865-0100		1	COVER	**8-11**
030	2506668-0200		1	STRIP APPLICATOR	**8-13**
130	2506614-0100		1	BOBBIN BRAKE	**8-107**
140	2506615-0100		1	BOBBIN BRAKE	**8-109**
190	2613749-0100		1	COVER	**8-33**
Common Parts					
010	1487560-0200		1	MACHINE BODY	**8-111, 8-113, 8-115, 8-117**
040	1484707-0200		1	STRIP MAGAZINE	**8-133**
050	2588946-0100		1	SPLICING DEVICE	**8-149, 8-151**
060	2588422-0100		1	MATERIAL HOLDER L1	**8-179, 8-181**
070	2588423-0100		1	MATERIAL HOLDER L2	**8-189, 8-191**
080	1548491-0200		1	ELECTRICAL CABINET	**8-199, 8-201, 8-203, 8-205, 8-207, 8-209, 8-211, 8-213, 8-215, 8-217**
090	2564633-0100		1	VALVE PANEL	**8-231, 8-233**
100	1487808-0200		1	BRACKET	**8-241**
110	1490831-0200		1	MAGAZINE	**8-251, 8-253**
120	1490215-0200		1	COVERING PANEL	**8-257, 8-259, 8-261, 8-263**

Pos	Part No	UN	Qty	Description	Page No

Machine Type | Group Description | Used-In | Group Number | Page No

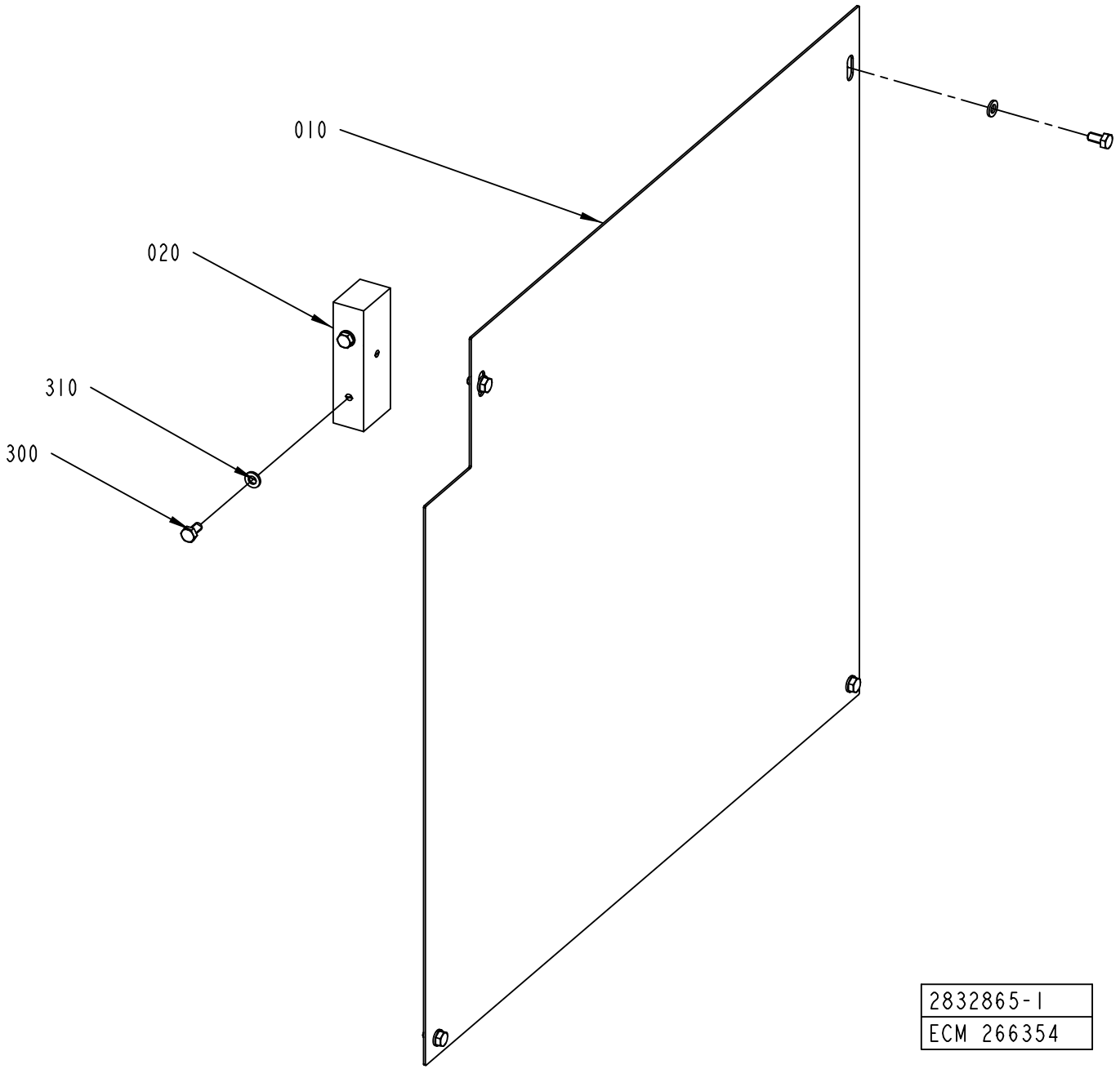
010
020
310
300
2832865-1
ECM 266354

ECM: 266854 - 20061101
Group number: 2832865-0100
Assembly Drawing: 2832865-1_1_AA

Pos	Part No	UN	Qty	Description	Page No
-					
010	2832866-0000		1	COVER	
020	2833334-0000		1	BRACKET	
300	312105-0366		6	SCREW M6S ISO 4017 M6X12 A480	
310	315105-0153		6	WASHER BRB 6,4X12 RFR	

Pos	Part No	UN	Qty	Description	Page No

STRIP APPLICATOR

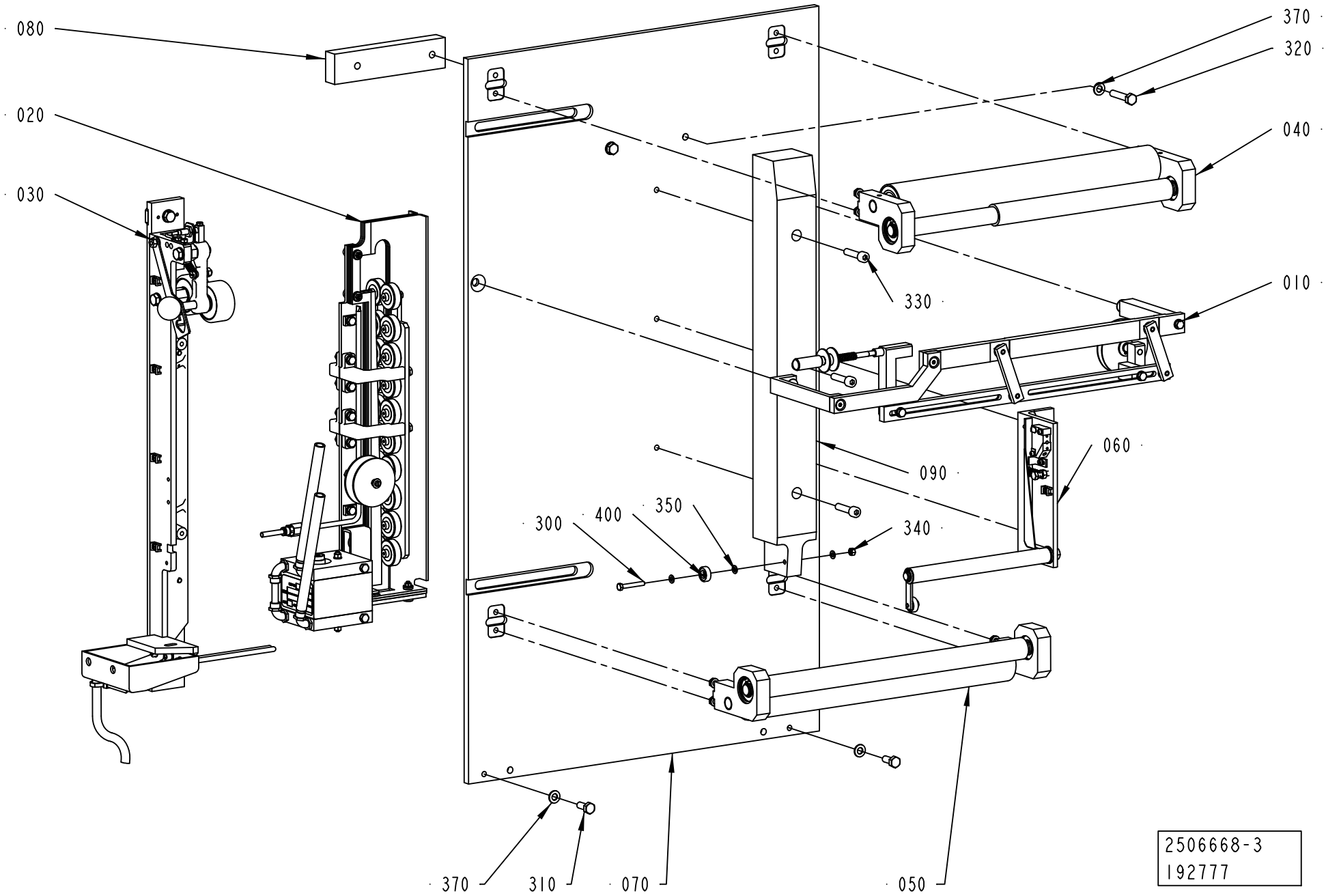

ECM: 272345 - 20060712
Group number: 2506668-0200
Assembly Drawing: 2506668-3_1_AB

Pos	Part No	UN	Qty	Description	Page No
-					
010	2530410-0200		1	STRIP GUIDE	**8-15**
020	2529569-0100		1	INDUCTOR	**8-17**
030	2529571-0100		1	PRESSURE ROLLER	**8-25**
040	2507019-0100		1	ROLLER	**8-27**
050	2507020-0100		1	ROLLER	**8-29**
060	2507022-0200		1	SPLICE DETECTOR	**8-31**
070	2602990-0000		1	SHEET	
080	2506660-0000		1	SPACER	
090	2506664-0000		1	STEERING	
300	312105-0337		1	SCREW M6S ISO 4014 M5X35 A480	
310	312105-0451		2	SCREW M6S ISO 4017 M8X20 A480	
320	312109-0459		2	SCREW M6S ISO 4017 M8X40 A480	
330	312115-0457		3	SCREW ISO4762 M8X35 A4 80	
340	312605-0314		1	HEXAGON NUT, M6M M5 A280	
350	315105-0146		3	WASHER BRB 5,3X10 RFR	
370	315105-0165		4	WASHER BRB 8,4X16 RFR	
400	90214-0138		1	BALL BEARING, 5X19X6 MM	

Pos	Part No	UN	Qty	Description	Page No

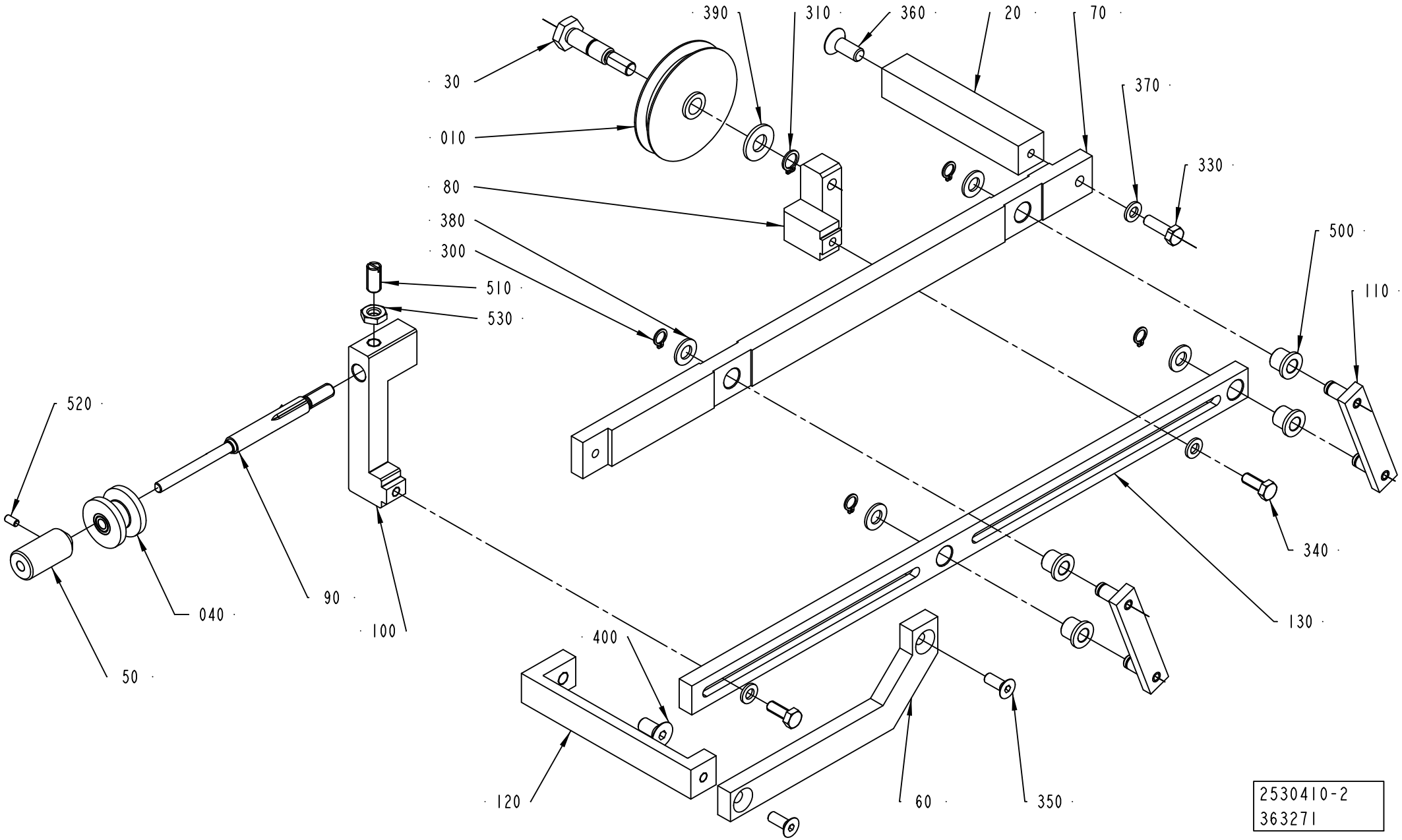
390
310
360
20
70
30
370
010
330
80
380
500
300
110
510
530
520
340
90
040
130
100
400
50
120
60
350
2530410-2
363271

ECM: 383464 - 20090402
Group number: 2530410-0200
Assembly Drawing: 2530410-2_1_AE

Pos	Part No	UN	Qty	Description	Page No
-					
010	2831687-0000		1	GUIDE WHEEL	
020	2504801-0000		1	BRACKET	
030	2504807-0000		1	AXLE PIN	
040	2831686-0000		1	ROLLER	
050	2748699-0000		1	KNOB	
060	2530399-0000		1	HANGER	
070	2602992-0000		1	ROD	
080	2530405-0000		1	BRACKET	
090	2748698-0000		1	ADJUSTING SCREW	
100	2748697-0000		1	BRACKET	
110	2530408-0000		2	LEVER	
120	2504808-0000		1	BRACKET	
130	2602991-0000		1	ROD	
300	90141-0015		4	RETAINING RING FOR SHAFT DIN 471 8 SS	
310	90141-0016		1	RETAINING RING FOR SHAFT DIN 471 10 SS	
330	312105-0370		1	SCREW M6S ISO 4017 M6X20 A480	
340	312105-0368		2	SCREW M6S ISO 4017 M6X16 A480	
350	312155-0368		2	SCREW DIN 7991 MF6S M6X16 A4 70	
360	312155-0451		1	SCREW DIN 7991 MF6S M8X20 A4 70	
370	315105-0153		3	WASHER BRB 6,4X12 RFR	
380	315105-0165		4	WASHER BRB 8,4X16 RFR	
390	315105-0173		1	WASHER BRB 10,5X22 RFR	
400	312155-0449		1	SCREW DIN 7991 MF6S M8X16 A4 70	
500	321111-0097		4	FLANGE BUSHING, 8X12X12 MM	
510	90287-0334		1	SCREW SPRINGLOAD. SLOTTED HEAD M8X16	
520	312318-0287		1	SCREW ISO4029 M4X8 A4	
530	312625-0318		1	HEXAGON THIN NUT, EN 24035 ML6M M8 A4	

Pos	Part No	UN	Qty	Description	Page No

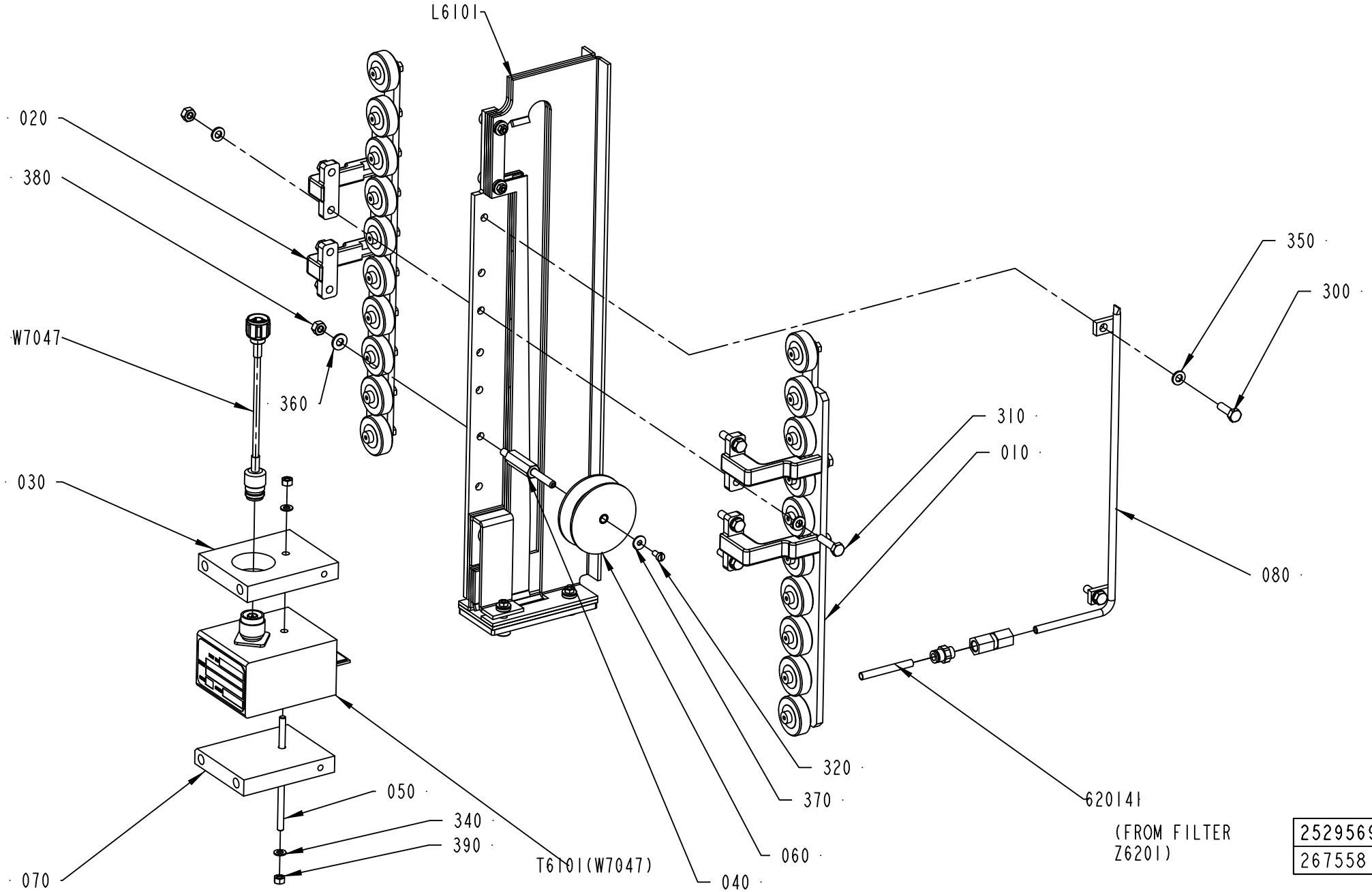

2529569-2
267558

ECM: 383465 - 20090402
Group number: 2529569-0100
Assembly Drawing: 2529569-2_1_AC

Pos	Part No	UN	Qty	Description	Page No
A3/FLEX TBA 0200B, A3/FLEX TBA 0250B, A3/FLEX TBA 0330S (See drawing on page: 8-16)					
T6101	67380-0214		1	TRANSFORMER	
W7047	2540595-0008		1	COAXIAL CABLE	
A3/FLEX TBA 0500B, A3/FLEX TBA 1000B, A3/FLEX TBA 1000S, A3/FLEX TBA 1000SQ, A3/FLEX TPA 1000SQ, A3/FLEX TBA 0200S, A3/FLEX TBA 1500S, A3/FLEX TPA 0330SQ, A3/FLEX TPA 0500SQ, A3/FLEX TBA 1890S, A3/FLEX TBA 2000S, A3/FLEX TBA 0200M, A3/FLEX TBA 0250S, A3/FLEX TBA 0500S, A3/FLEX TPA 0250SQ, A3/FLEX TPA 0200SQ, A3/FLEX TPA 0750SQ, A3/FLEX TBA 0200SQ, A3/FLEX TBA 0250SQ, A3/FLEX TBA 0500SQ, A3/FLEX TBA 1400B, A3/FLEX TGA 1000SQ, A3/FLEX TGA 0500SQ, A3/FLEX TGA 0750SQ (See drawing on page: 8-16)					
T6101	67380-0207		1	TRANSFORMER	
W7047	2540595-0008		1	COAXIAL CABLE	
Common Parts					
010	2506496-0100		1	PRESSURE ROLLER	**8-19**
020	2506497-0100		1	PRESSURE ROLLER	**8-21**
030	1129839-0000		1	COOLING PLATE	
040	2510366-0000		1	SHAFT	
050	1498430-0000		1	ROD	
060	2831685-0000		1	ROLLER	
070	1129869-0000		1	COOLING PLATE	
080	2529930-0000		1	AIR NOZZLE	
300	312105-0370		2	SCREW M6S ISO 4017 M6X20 A480	
310	312105-0372		4	SCREW M6S ISO 4017 M6X25 A480	
320	312125-0287		1	SCREW ISO 1207 M4X8 A4	
340	315105-0146		2	WASHER BRB 5,3X10 RFR	
350	315105-0153		10	WASHER BRB 6,4X12 RFR	
360	315105-0156		1	WASHER BRB 6,7X14 RFR	
370	90005-0082		1	WASHER PLAIN ROUND 4,3(M4)/12,H=1	
380	312605-0316		5	HEXAGON NUT, M6M M6 A280	
390	312605-0314		2	HEXAGON NUT, M6M M5 A280	
620141	90166-0193	MM	850	TUBE 6 MM PUR BLUE	
650	342722-0202		1	PIPE COUPLING 1/8" D=6MM	
660	342725-0102		1	CONN. STR. PIPE GAI06LR G1/8	
L6101	2509617-0100		1	INDUCTOR	**8-23**

Pos	Part No	UN	Qty	Description	Page No

Machine Type | Group Description | Used-In | Group Number | Page No

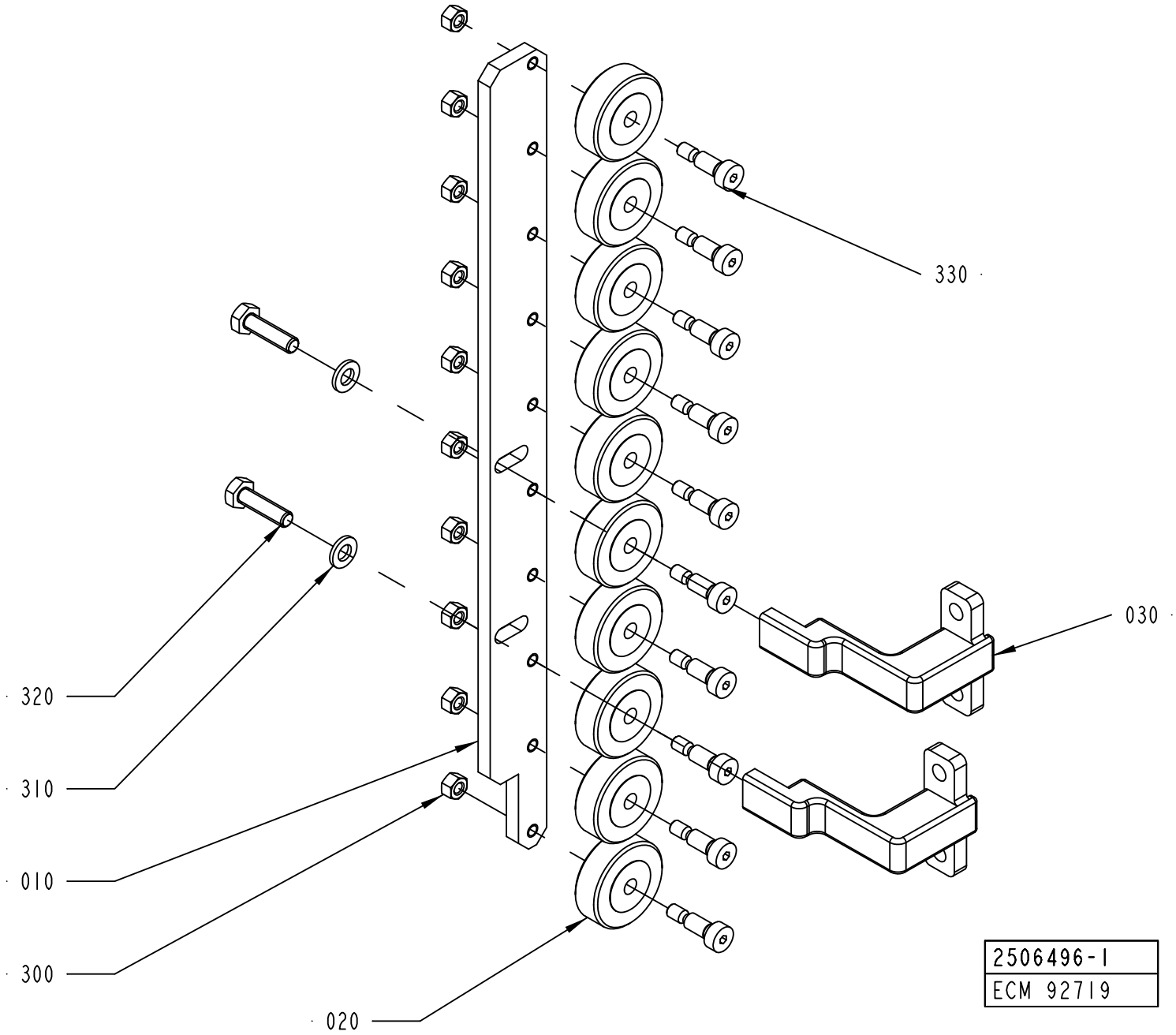
330
030
320
310
010
300
020
2506496-1
ECM 92719

ECM: 341518 - 20080215
Group number: 2506496-0100
Assembly Drawing: 2506496-1_1_AA

Pos	Part No	UN	Qty	Description	Page No
-					
010	1558914-0000		1	ROLLER BRACKET	
020	1558911-0000		10	PRESSURE ROLLER	
030	2529573-0000		2	BRACKET	
300	312605-0314		10	HEXAGON NUT, M6M M5 A280	
310	315105-0153		2	WASHER BRB 6,4X12 RFR	
320	312105-0371		2	SCREW M6S ISO 4017 M6X22 A480	
330	312180-0366		10	SCREW ISO7379 H6X12	

Pos	Part No	UN	Qty	Description	Page No

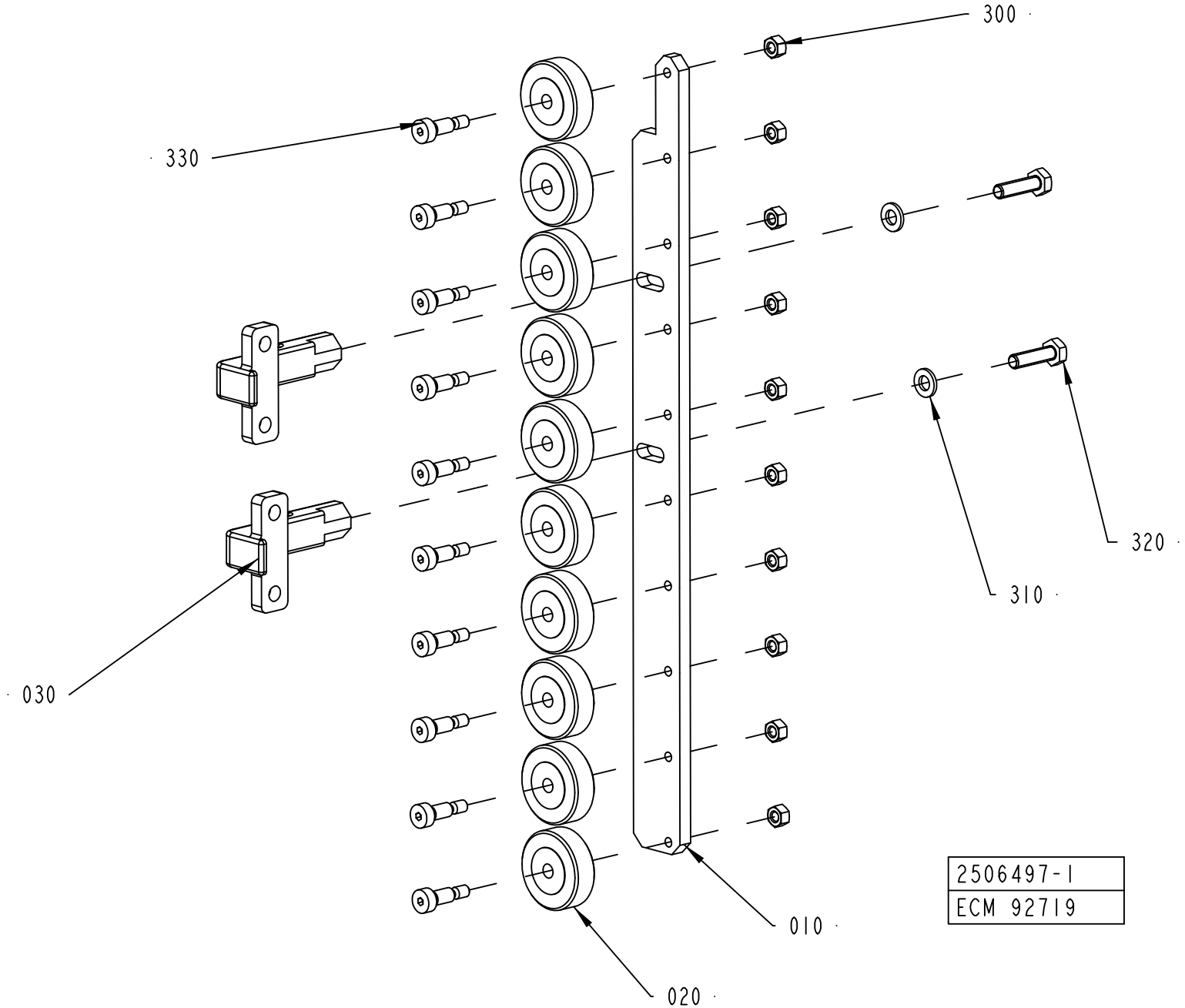
300
330
320
310
030
010
020
2506497-1
ECM 92719

ECM: 341519 - 20080215
Group number: 2506497-0100
Assembly Drawing: 2506497-1_1_AA

Pos	Part No	UN	Qty	Description	Page No
-					
010	1558914-0000		1	ROLLER BRACKET	
020	1558911-0000		10	PRESSURE ROLLER	
030	2529572-0000		2	BRACKET	
300	312605-0314		10	HEXAGON NUT, M6M M5 A280	
310	315105-0153		2	WASHER BRB 6,4X12 RFR	
320	312105-0371		2	SCREW M6S ISO 4017 M6X22 A480	
330	312180-0366		10	SCREW ISO7379 H6X12	

Pos	Part No	UN	Qty	Description	Page No

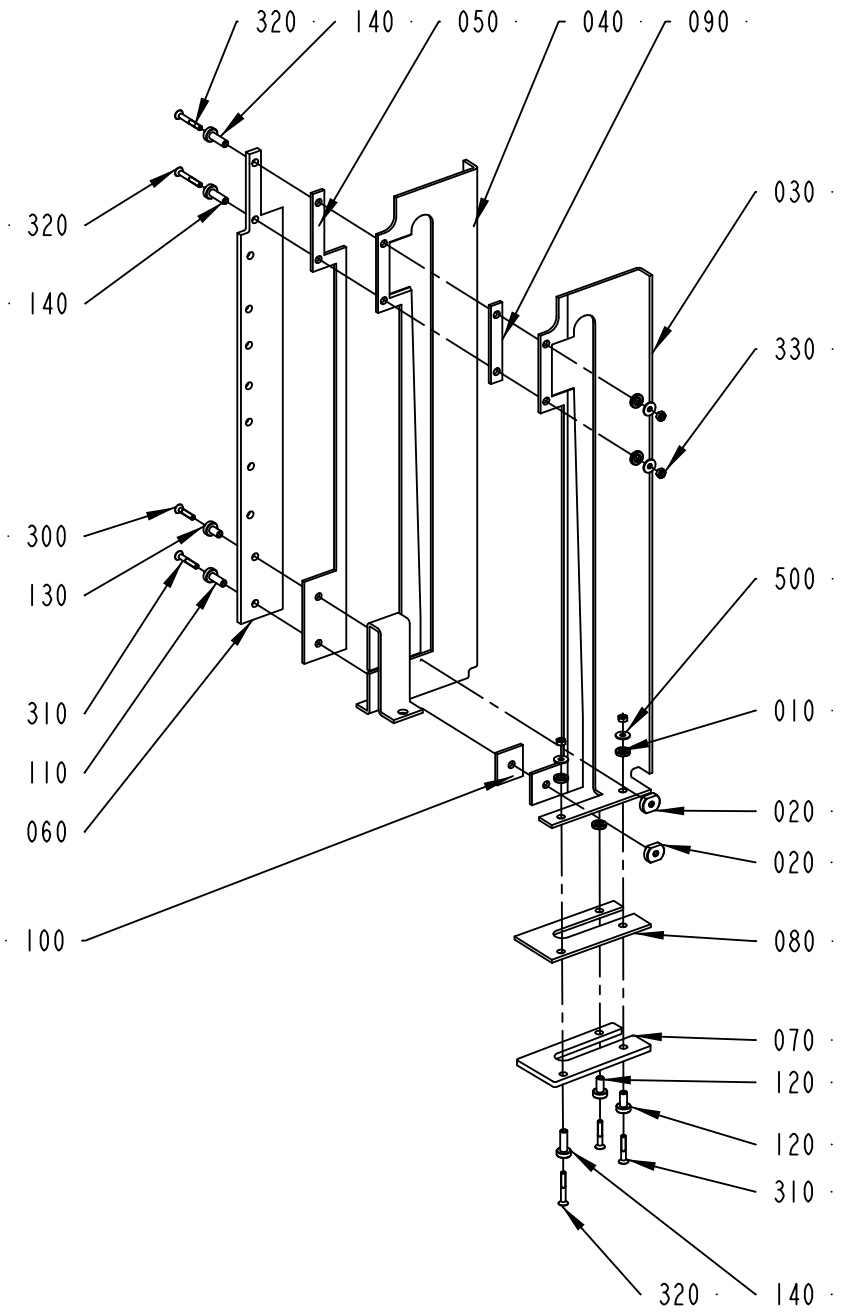

2509617-1
ECM 124683

ECM: 240441 - 20060419
Group number: 2509617-0100
Assembly Drawing: 2509617-1_1_AB

Pos	Part No	UN	Qty	Description	Page No
-					
010	1558917-0000		5	SPACER DISC	
020	1558918-0000		2	TIGHTENING NUT	
030	2506498-0000		1	SEALING PLATE	
040	2506499-0000		1	SEALING PLATE	
050	2506500-0000		1	PLATE	
060	2506501-0000		1	PLATE	
070	2506502-0000		1	PLATE	
080	2506503-0000		1	PLATE	
090	2506504-0000		1	PLATE	
100	2506505-0000		1	PLATE	
110	2509613-0000		1	BUSHING	
120	2509614-0000		2	BUSHING	
130	2529578-0000		1	BUSHING	
140	2597600-0000		3	BUSHING	
300	312155-0295		1	SCREW DIN 7991 MF6S M4X20 A4 70	
310	312155-0297		3	SCREW DIN 7991 MF6S M4X25 A4 70	
320	312155-0299		3	SCREW DIN 7991 MF6S M4X30 A4 70	
330	312605-0312		5	HEXAGON NUT, M6M M4 A280	
500	90005-0082		5	WASHER PLAIN ROUND 4,3(M4)/12,H=1	

Pos	Part No	UN	Qty	Description	Page No

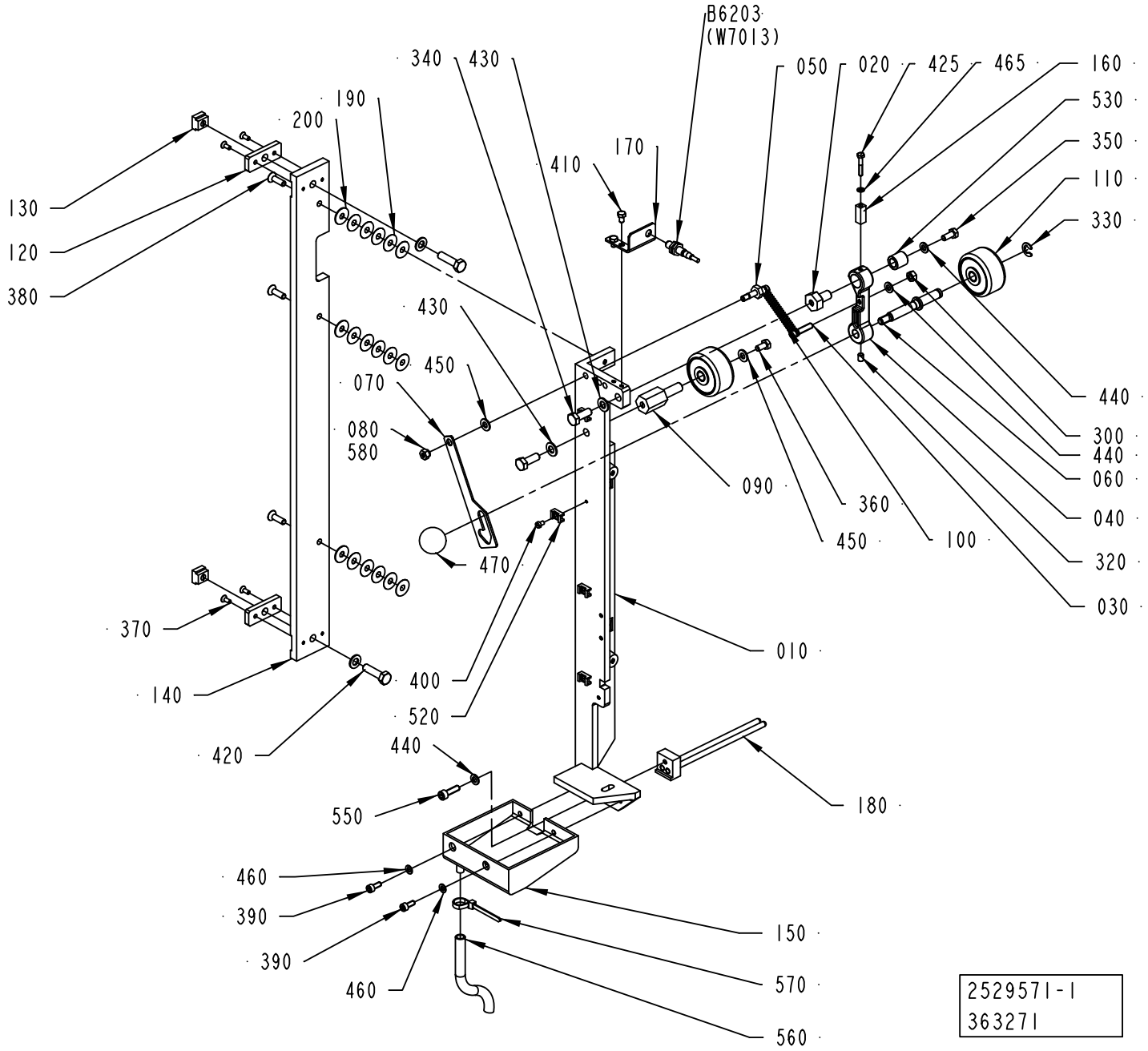
B6203
(W7013)
340
430
190
200
410
170
050
020
425
465
160
530
350
110
330
130
120
380
430
450
070
080
580
090
360
450
100
440
300
440
060
040
320
030
470
370
010
140
400
520
420
440
550
180
460
390
390
460
150
570
560
2529571-1
363271

ECM: 367632 - 20081002
Group number: 2529571-0100
Assembly Drawing: 2529571-1_1_AE

Pos	Part No	UN	Qty	Description	Page No
-					
010	2510359-0000		1	FASTENING BRACKET	
020	2510360-0000		1	SHAFT	
030	2510362-0000		1	SHAFT	
040	2510361-0000		1	CONNECTING ROD	
050	2510363-0000		1	SHAFT	
060	2510364-0000		1	SHAFT	
070	1349432-0000		1	CATCH	
080	1349994-0000		1	NUT	
090	1035895-0000		1	SHAFT	
100	1478303-0000		1	TENSION SPRING	
110	1346988-0000		2	ROLL	
010	*90166-0056*	*MM*	*40*	*SHRINKABLE HOSE (2,5")*	
020	*321120-0104*		*2*	*BEARING BUSH W/O FLANGE, 10X12X10 MM*	
120	2506656-0000		2	PLATE	
130	2506654-0000		2	BLOCK	
140	2506657-0000		1	SPACER	
150	2529550-0000		1	SUPPORT	
160	2535932-0000		1	CAM	
170	2535933-0000		1	SUPPORT	
180	1349672-0000		1	GUIDE	
190	2931920-0001		15	SHIM	
200	2931920-0002		3	SHIM	
300	312605-0316		1	HEXAGON NUT, M6M M6 A280	
320	312318-0362		1	SCREW ISO4029 M6X8 A4	
330	315755-0801		1	RETAINING RING SHAFT DIN 6799 8 A2	
340	312105-0452		2	SCREW M6S ISO 4017 M8X22 A480	
350	312105-0367		1	SCREW M6S ISO 4017 M6X14 A480	
360	312105-0366		1	SCREW M6S ISO 4017 M6X12 A480	
370	312155-0289		4	SCREW DIN 7991 MF6S M4X10 A4 70	
380	312155-0370		3	SCREW DIN 7991 MF6S M6X20 A4 70	
390	312115-0327		2	SCREW ISO4762 M5X12 A4 80	
400	312125-0285		4	SCREW ISO 1207 M4X6 A4	
410	312105-0323		2	SCREW M6S ISO 4017 M5X8 A480	
420	312105-0455		2	SCREW M6S ISO 4017 M8X30 A480	
425	312105-0297		1	SCREW M6S ISO 4017 M4X25 A470	
430	315105-0165		4	WASHER BRB 8,4X16 RFR	
440	315105-0153		3	WASHER BRB 6,4X12 RFR	
450	315105-0156		2	WASHER BRB 6,7X14 RFR	
460	315105-0146		2	WASHER BRB 5,3X10 RFR	
465	315105-0136		1	WASHER BRB 4,3X8 RFR	
470	318800-0104		1	HANDLE,SPHERICAL KNOB,INT.THRE.,D.30-M8	
520	352113-0205		4	ANCHOR PLATES FOR STRIPS, TYPE TM2S8-C10	
530	321105-0164		1	BEARING BUSH W/O FLANGE, 10X16X16 MM	
550	312115-0370		1	SCREW ISO4762 M6X20 A4 80	
560	90459-1126	MM	3000	PLASTIC HOSE PVC TRANSPARENT, 8X11MM	
570	352113-0102		1	CABLE TIE, BLACK 188X4,8 MM	
580	90157-0016	ML	1	LOCKING FLUID LOCTITE 242 50 ML	
B6203	90600-0473		1	INDUCTIVE SWITCH E2A-S08KS01-WP-B1-TP 5M	

Machine Type Group Description Used-In Group Number Page No

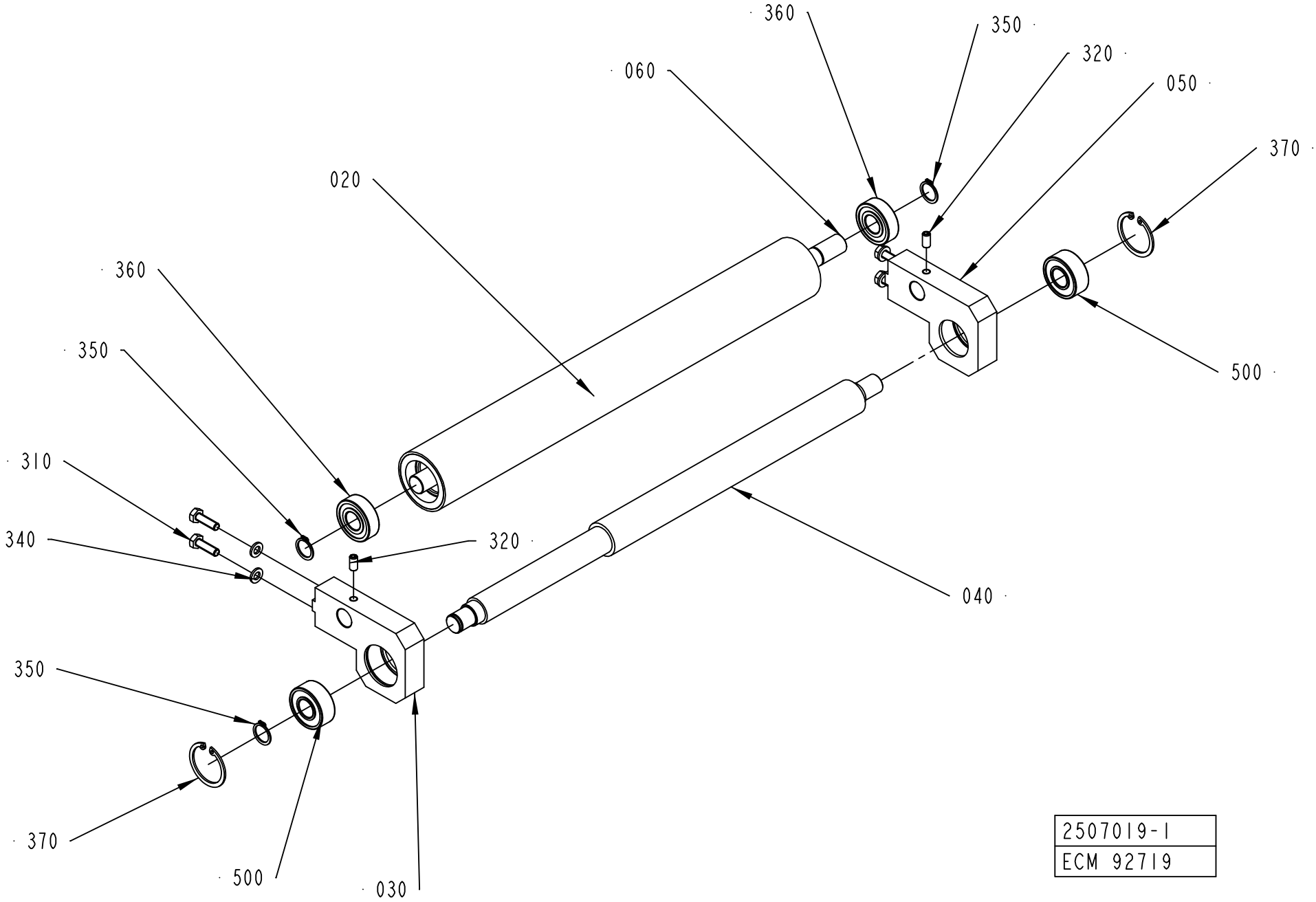
360
350
320
060
050
370
020
360
350
500
310
340
320
040
350
370
500
030
2507019-1
ECM 92719

ECM: 383470 - 20090402
Group number: 2507019-0100
Assembly Drawing: 2507019-1_1_AA

Pos	Part No	UN	Qty	Description	Page No
-					
020	2506661-0000		1	ROLLER	
030	2510404-0000		1	SUPPORT	
040	2506663-0000		1	SUPPORT	
050	2510405-0000		1	SUPPORT	
060	2506666-0000		1	AXEL	
310	312105-0370		4	SCREW M6S ISO 4017 M6X20 A480	
320	312318-0366		2	SCREW ISO4029 M6X12 A4	
340	315105-0153		4	WASHER BRB 6,4X12 RFR	
350	315751-0112		3	RETAINING RING FOR SHAFT DIN 471 15 SS	
360	321313-0102		2	BALL BEARING, 15X35X11 MM	
370	315753-0124		2	RETAINING RING FOR BORE DIN 472 35 A2	
500	90458-2737		2	SPHERICAL BALL BEARING, 15X35X14 MM	

Pos	Part No	UN	Qty	Description	Page No

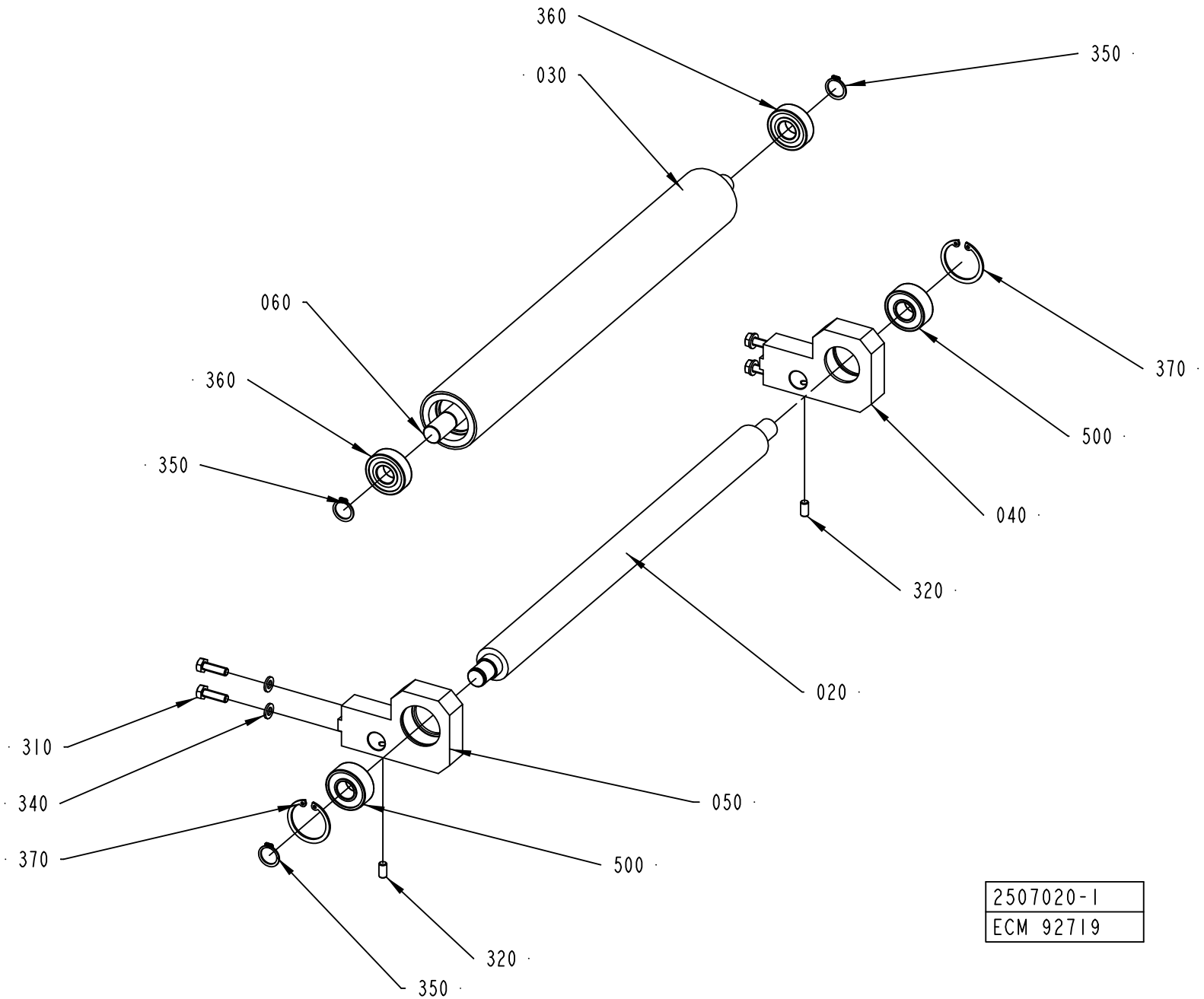
360
030
350
060
360
350
370
500
040
320
020
310
340
370
050
500
320
350
2507020-1
ECM 92719

ECM: 383469 - 20090402
Group number: 2507020-0100
Assembly Drawing: 2507020-1_1_AA

Pos	Part No	UN	Qty	Description	Page No
-					
020	2506659-0000		1	ROLLER	
030	2506661-0000		1	ROLLER	
040	2510404-0000		1	SUPPORT	
050	2510405-0000		1	SUPPORT	
060	2506666-0000		1	AXEL	
310	312105-0370		4	SCREW M6S ISO 4017 M6X20 A480	
320	312318-0366		2	SCREW ISO4029 M6X12 A4	
340	315105-0153		4	WASHER BRB 6,4X12 RFR	
350	315751-0112		3	RETAINING RING FOR SHAFT DIN 471 15 SS	
360	321313-0102		2	BALL BEARING, 15X35X11 MM	
370	315753-0124		2	RETAINING RING FOR BORE DIN 472 35 A2	
500	90458-2737		2	SPHERICAL BALL BEARING, 15X35X14 MM	

Pos	Part No	UN	Qty	Description	Page No

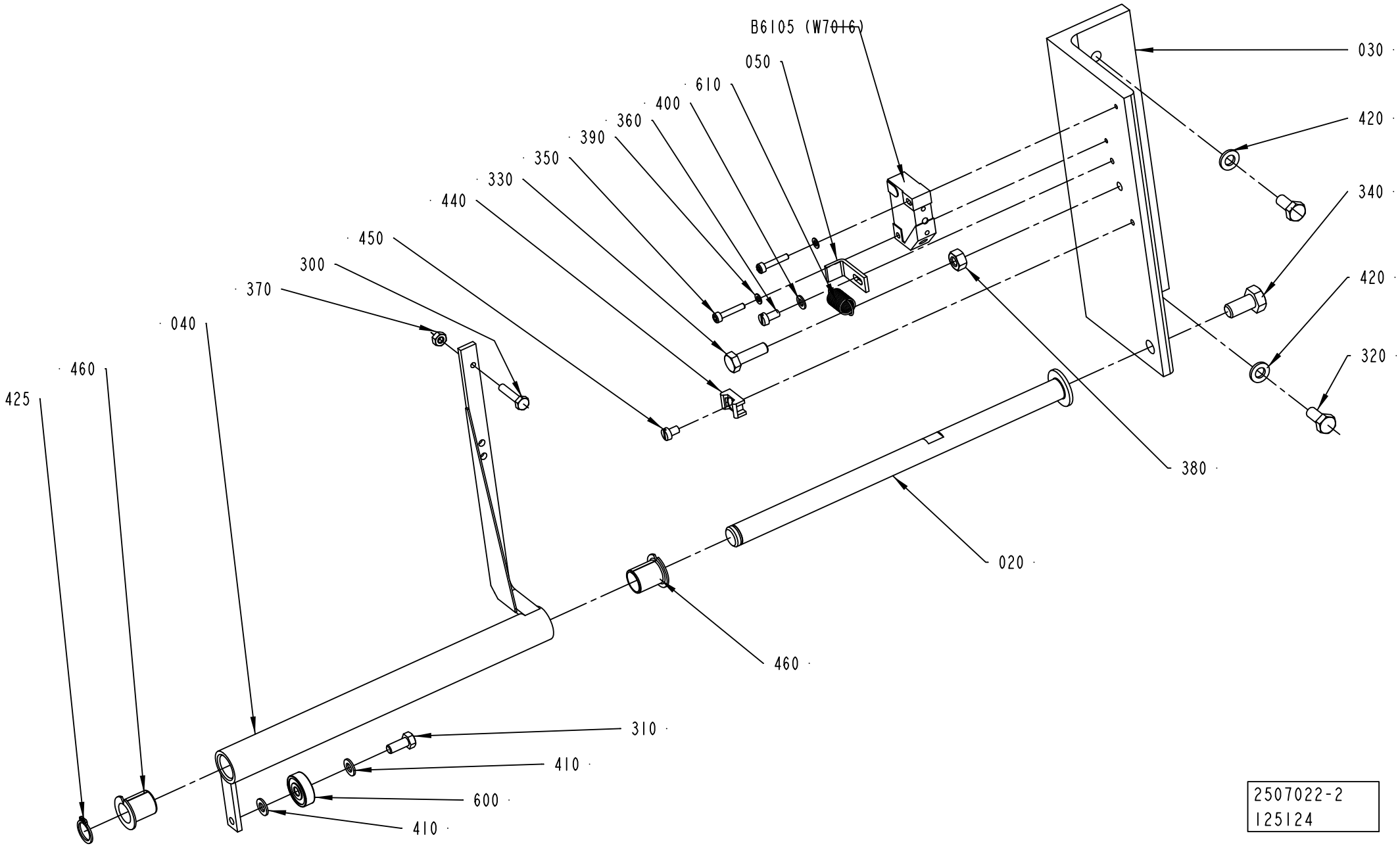
B6105 (W7016)
050
610
400
360
390
350
330
440
450
300
370
040
460
425
030
420
340
420
320
380
020
460
310
410
600
410
2507022-2
125124

ECM: 272337 - 20060712
Group number: 2507022-0200
Assembly Drawing: 2507022-2_1_AA

Pos	Part No	UN	Qty	Description	Page No
-					
020	2602995-0000		1	AXLE	
030	2602994-0000		1	BRACKET	
040	2602993-0000		1	LEVER	
050	2504812-0000		1	BLOCK	
300	312105-0295		1	SCREW M6S ISO 4017 M4X20 A470	
310	312105-0327		1	SCREW M6S ISO 4017 M5X12 A480	
320	312105-0367		2	SCREW M6S ISO 4017 M6X14 A480	
330	312105-0370		1	SCREW M6S ISO 4017 M6X20 A480	
340	312105-0449		1	SCREW M6S ISO 4017 M8X16 A480	
350	312115-0228		2	SCREW ISO4762 M3X16 A4 80	
360	312125-0287		1	SCREW ISO 1207 M4X8 A4	
370	312605-0312		1	HEXAGON NUT, M6M M4 A280	
380	312605-0316		1	HEXAGON NUT, M6M M6 A280	
390	315105-0124		2	WASHER BRB 3,2X6 RFR	
400	315105-0136		1	WASHER BRB 4,3X8 RFR	
410	315105-0146		2	WASHER BRB 5,3X10 RFR	
420	315105-0153		2	WASHER BRB 6,4X12 RFR	
425	315751-0109		1	RETAINING RING FOR SHAFT DIN 471 12 SS	
440	352113-0205		1	ANCHOR PLATES FOR STRIPS, TYPE TM2S8-C10	
450	312121-0285		1	SCREW ISO 1207 M4X6 4.8-5.8 Z.PL.	
460	321161-0185		2	FLANGE BUSHING, 12X14X17 MM	
600	90214-0138		1	BALL BEARING, 5X19X6 MM	
610	90335-0089		1	TENSION SPRING 41490, 0,9X10X23	
B6105	90044-0194		1	PROX.SW. IN5329/IN3002-BPKG(EX90044-104)	

Pos	Part No	UN	Qty	Description	Page No

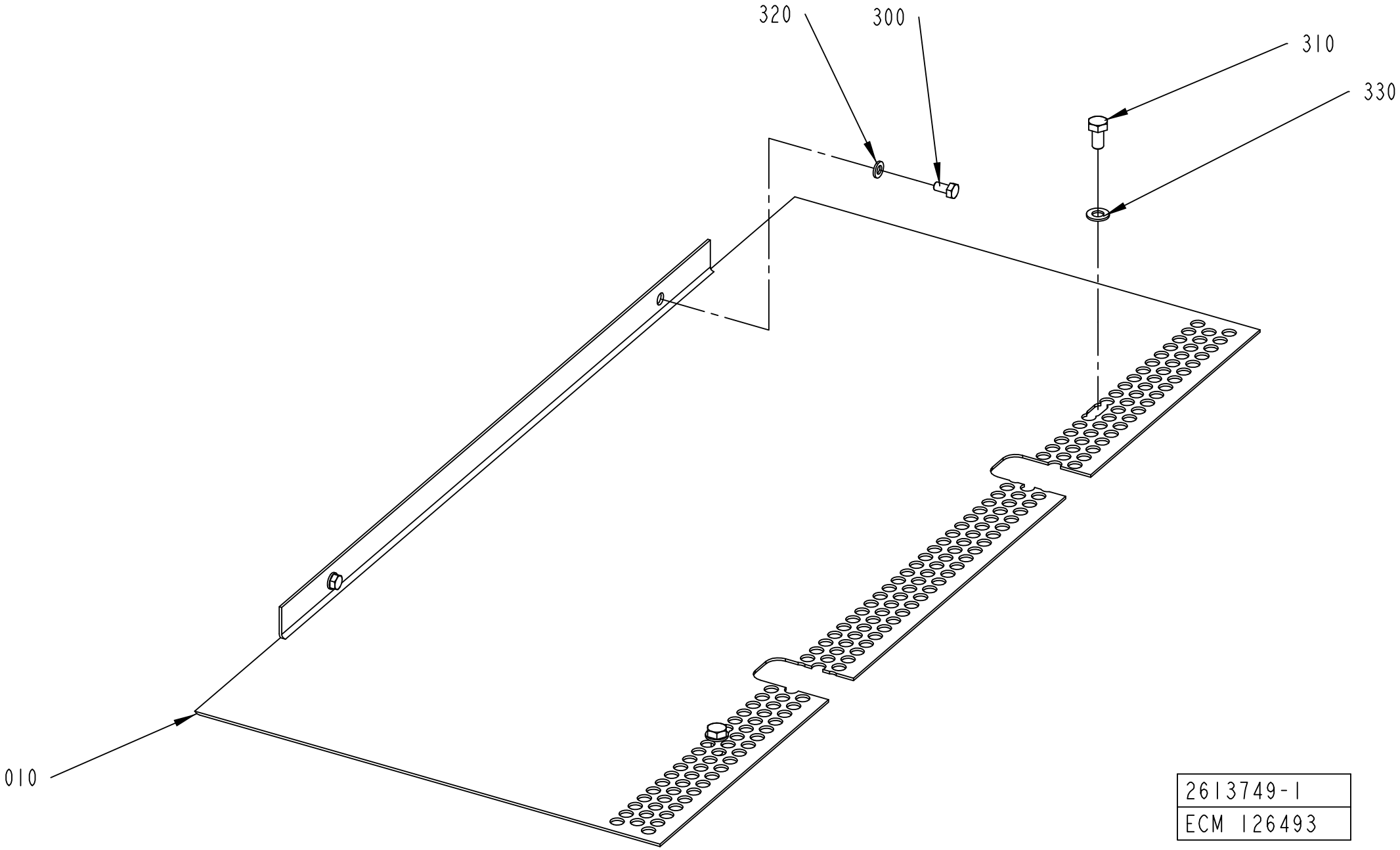
320
300
310
330
010
2613749-1
ECM 126493

ECM: 177222 - 20041005
Group number: 2613749-0100
Assembly Drawing: 2613749-1_1_AA

Pos	Part No	UN	Qty	Description	Page No
-					
010	2579996-0000		1	PLATE	
300	312105-0366		2	SCREW M6S ISO 4017 M6X12 A480	
310	312105-0449		2	SCREW M6S ISO 4017 M8X16 A480	
320	315105-0153		2	WASHER BRB 6,4X12 RFR	
330	315105-0165		2	WASHER BRB 8,4X16 RFR	

Pos	Part No	UN	Qty	Description	Page No

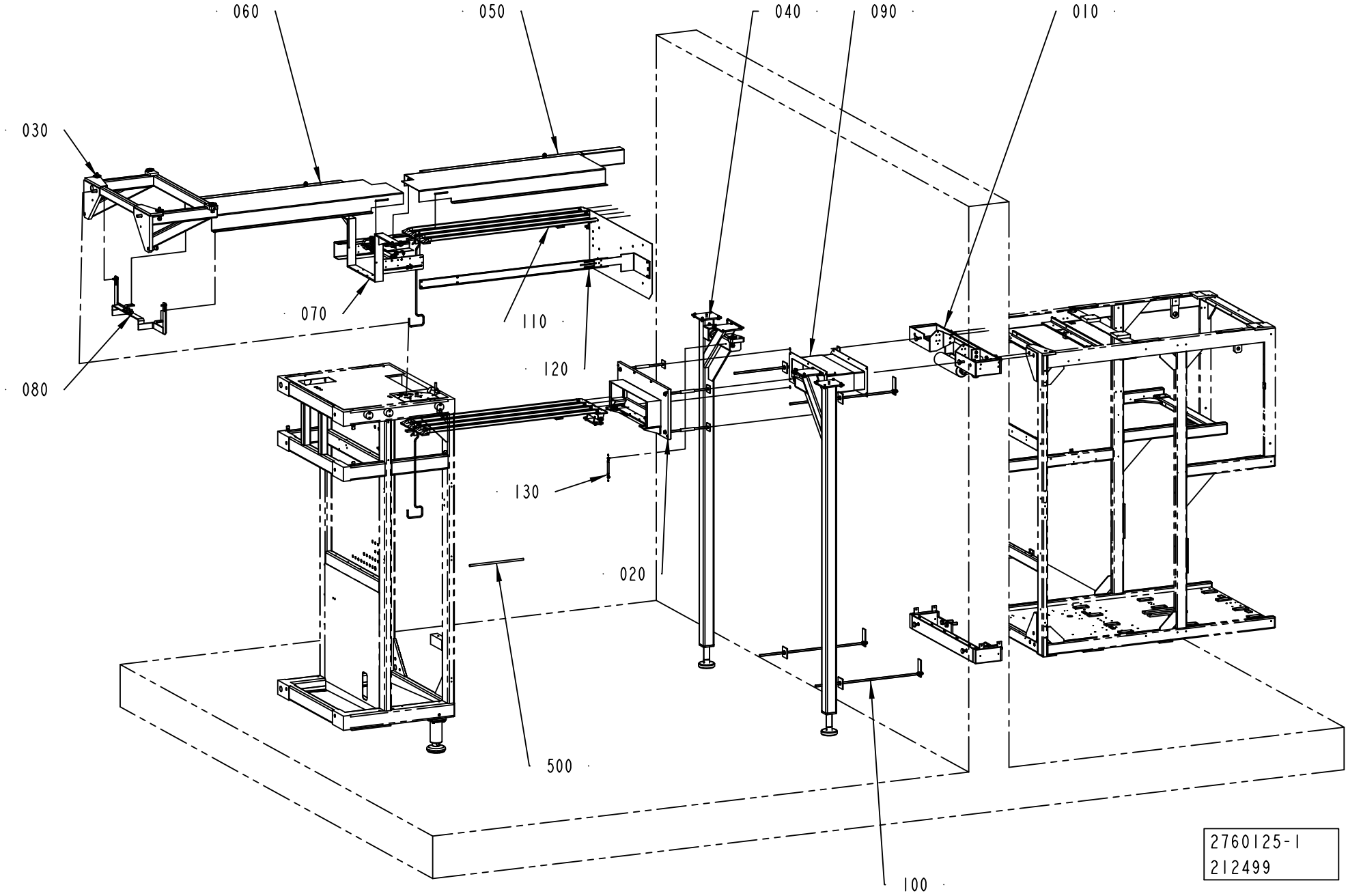
060
050
040
090
010
030
070
110
120
080
130
020
500
100
2760125-1
212499

ECM: 310506 - 20070620
Group number: 2760125-0100
Assembly Drawing: 2760125-1_1_AA

This list covers pages from 8-34 to 8-39

Pos	Part No	UN	Qty	Description	Page No
DIMC/FLEX (See drawing on page: 8-38)					
030	2734982-0100		1	BRACKET	**8-41, 8-43**
040	2734985-0100		1	LEG	**8-45**
150	2905411-0100		1	COVER	**8-47**
170	2905408-0100		1	UPPER BENDING ROLLER	**8-49**
NO DIMC NO PT (See drawing on page: 8-34)					
030	2734982-0100		1	BRACKET	**8-41, 8-43**
040	2734985-0100		1	LEG	**8-45**
NO DIMC PT/FLEX (See drawing on page: 8-36)					
040	2564232-0100		1	LEG	**8-51, 8-53, 11-7, 11-9**
150	2791432-0100		1	COVER	**8-55**
160	2789083-0100		1	GUIDE ROLLER	**8-57**
200	2764297-0100		1	CABLE DUCT	**8-59**
Common Parts					
010	1346429-0300		1	BRACKET	**8-61**
020	1346431-0100		1	HOLDER	**8-63**
050	2748625-0100		1	COVER	**8-65, 8-67**
060	2750805-0100		1	COVER	**8-69, 8-71**
070	2755890-0100		1	SUPPORT	**8-73**
080	2755892-0100		1	SUPPORT	**8-77, 8-79, 8-81**
090	2755893-0100		1	COVER	**8-83**
100	2812397-0100		1	FIXING UNIT	**8-85**
110	1346430-0100		2	SUPPORT	**8-87, 8-89**
120	2764295-0100		1	TOOLS AND TEMPLATES	**8-91, 8-93**
130	2850064-0100		1	ELECTRICAL CONNECTION	**8-95**
500	90166-0068	MM	4000	TUBE 12 MM PA BLUE	

Pos	Part No	UN	Qty	Description	Page No

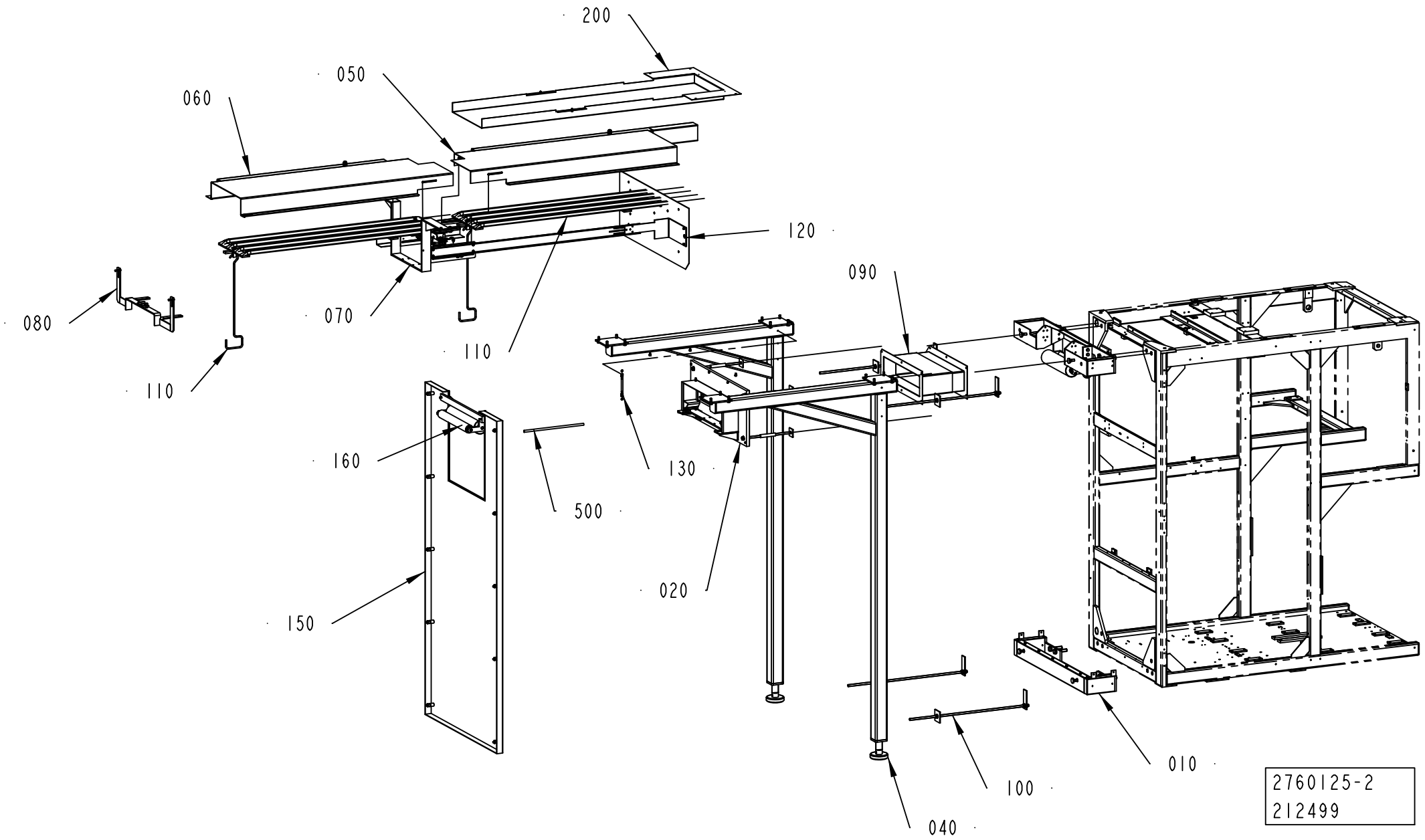
200
050
060
120
090
080
070
110
110
160
500
130
020
150
010
100
040
2760125-2
212499

ECM: 310506 - 20070620
Group number: 2760125-0100
Assembly Drawing: 2760125-2_1_AA

This list covers pages from 8-34 to 8-39

Pos	Part No	UN	Qty	Description	Page No
DIMC/FLEX (See drawing on page: 8-38)					
030	2734982-0100		1	BRACKET	**8-41, 8-43**
040	2734985-0100		1	LEG	**8-45**
150	2905411-0100		1	COVER	**8-47**
170	2905408-0100		1	UPPER BENDING ROLLER	**8-49**
NO DIMC NO PT (See drawing on page: 8-34)					
030	2734982-0100		1	BRACKET	**8-41, 8-43**
040	2734985-0100		1	LEG	**8-45**
NO DIMC PT/FLEX (See drawing on page: 8-36)					
040	2564232-0100		1	LEG	**8-51, 8-53, 11-7, 11-9**
150	2791432-0100		1	COVER	**8-55**
160	2789083-0100		1	GUIDE ROLLER	**8-57**
200	2764297-0100		1	CABLE DUCT	**8-59**
Common Parts					
010	1346429-0300		1	BRACKET	**8-61**
020	1346431-0100		1	HOLDER	**8-63**
050	2748625-0100		1	COVER	**8-65, 8-67**
060	2750805-0100		1	COVER	**8-69, 8-71**
070	2755890-0100		1	SUPPORT	**8-73**
080	2755892-0100		1	SUPPORT	**8-77, 8-79, 8-81**
090	2755893-0100		1	COVER	**8-83**
100	2812397-0100		1	FIXING UNIT	**8-85**
110	1346430-0100		2	SUPPORT	**8-87, 8-89**
120	2764295-0100		1	TOOLS AND TEMPLATES	**8-91, 8-93**
130	2850064-0100		1	ELECTRICAL CONNECTION	**8-95**
500	90166-0068	MM	4000	TUBE 12 MM PA BLUE	

Pos	Part No	UN	Qty	Description	Page No

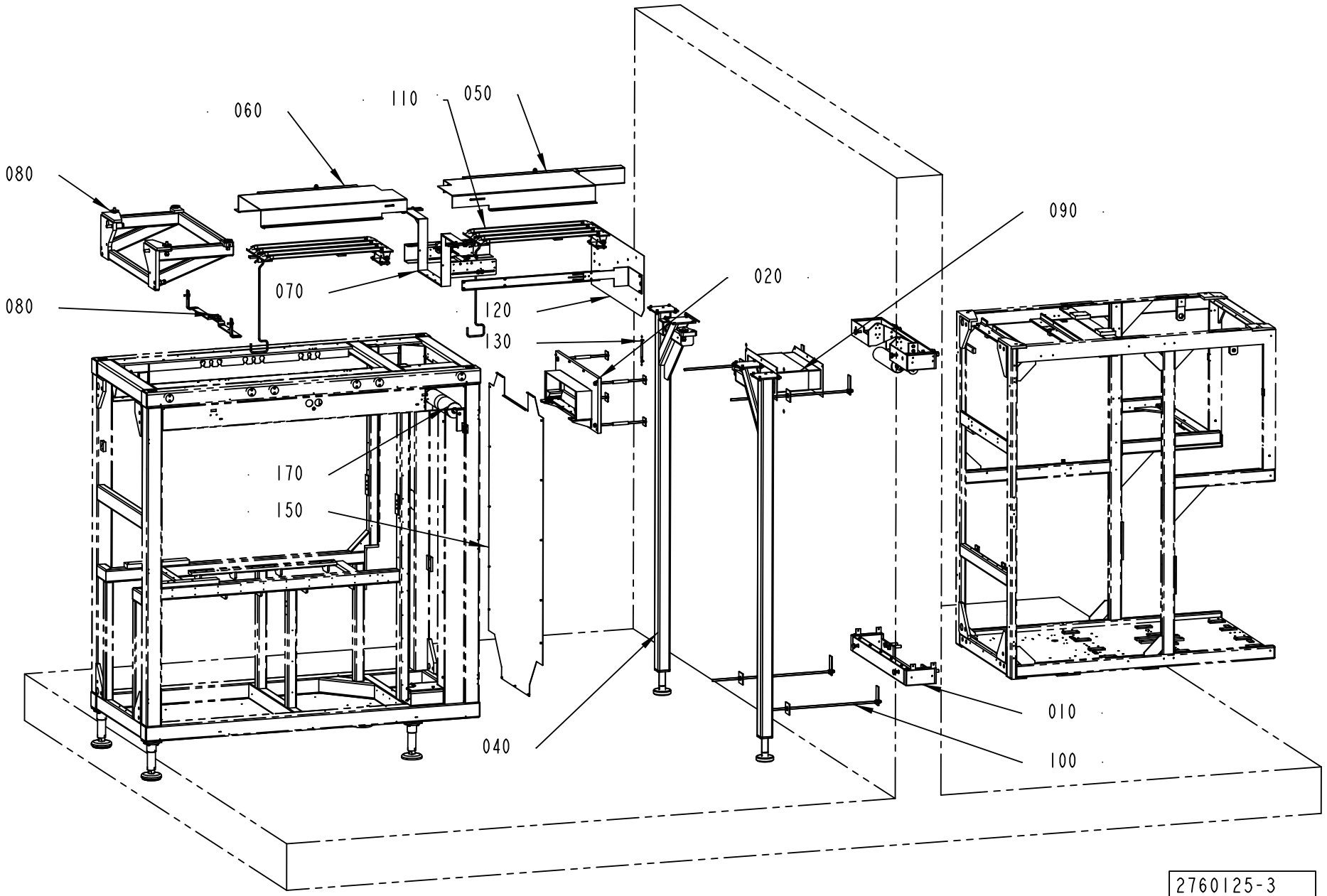
060
110
050
080
080
090
070
020
120
130
170
150
040
010
100
2760125-3
310502

ECM: 310506 - 20070620
Group number: 2760125-0100
Assembly Drawing: 2760125-3_1_AA

This list covers pages from 8-34 to 8-39

Pos	Part No	UN	Qty	Description	Page No
DIMC/FLEX (See drawing on page: 8-38)					
030	2734982-0100		1	BRACKET	**8-41, 8-43**
040	2734985-0100		1	LEG	**8-45**
150	2905411-0100		1	COVER	**8-47**
170	2905408-0100		1	UPPER BENDING ROLLER	**8-49**
NO DIMC NO PT (See drawing on page: 8-34)					
030	2734982-0100		1	BRACKET	**8-41, 8-43**
040	2734985-0100		1	LEG	**8-45**
NO DIMC PT/FLEX (See drawing on page: 8-36)					
040	2564232-0100		1	LEG	**8-51, 8-53, 11-7, 11-9**
150	2791432-0100		1	COVER	**8-55**
160	2789083-0100		1	GUIDE ROLLER	**8-57**
200	2764297-0100		1	CABLE DUCT	**8-59**
Common Parts					
010	1346429-0300		1	BRACKET	**8-61**
020	1346431-0100		1	HOLDER	**8-63**
050	2748625-0100		1	COVER	**8-65, 8-67**
060	2750805-0100		1	COVER	**8-69, 8-71**
070	2755890-0100		1	SUPPORT	**8-73**
080	2755892-0100		1	SUPPORT	**8-77, 8-79, 8-81**
090	2755893-0100		1	COVER	**8-83**
100	2812397-0100		1	FIXING UNIT	**8-85**
110	1346430-0100		2	SUPPORT	**8-87, 8-89**
120	2764295-0100		1	TOOLS AND TEMPLATES	**8-91, 8-93**
130	2850064-0100		1	ELECTRICAL CONNECTION	**8-95**
500	90166-0068	MM	4000	TUBE 12 MM PA BLUE	

Pos	Part No	UN	Qty	Description	Page No

BRACKET

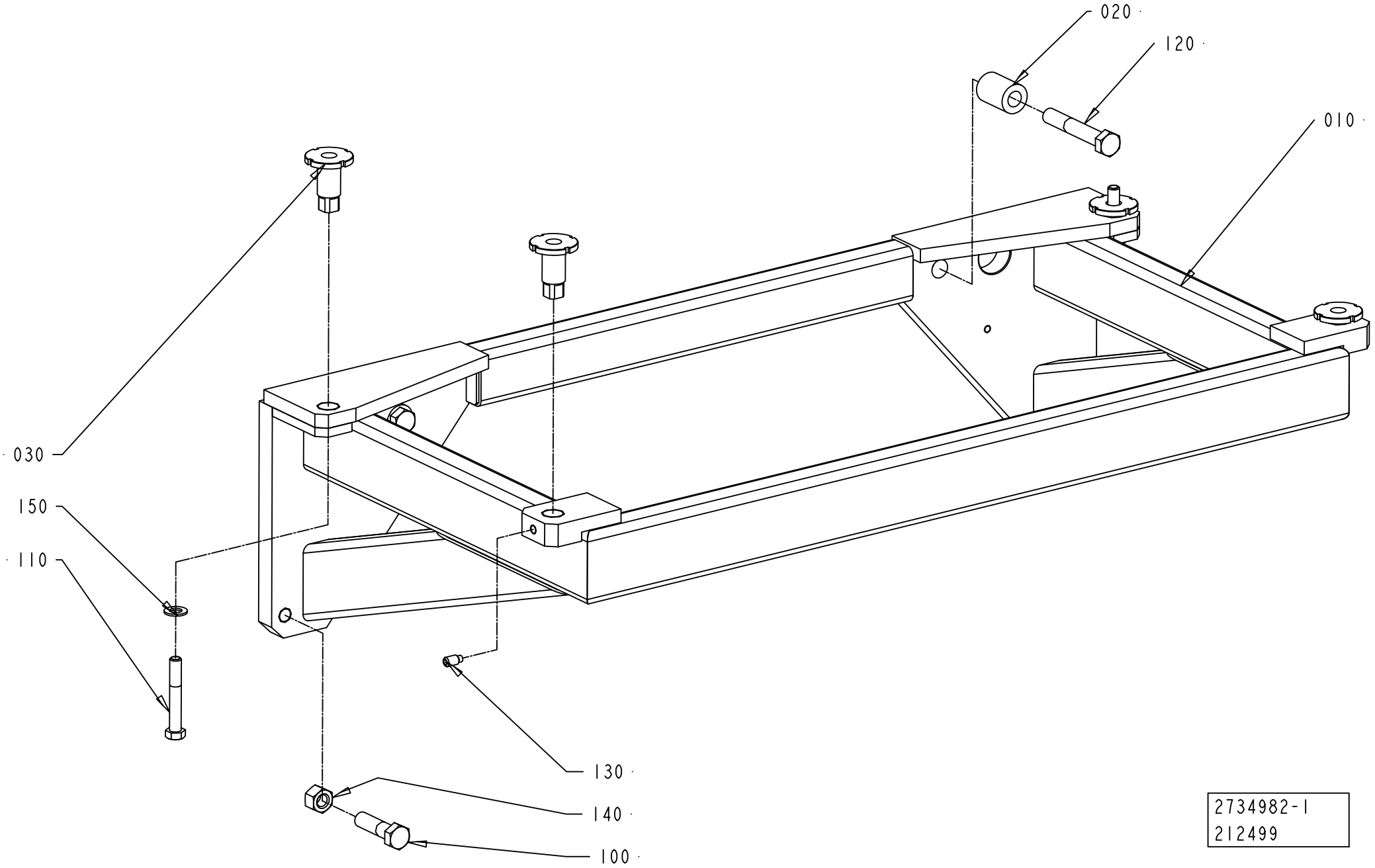

2734982-1
212499

ECM: 342679 - 20080215
Group number: 2734982-0100
Assembly Drawing: 2734982-1_1_AA

This list covers pages from 8-40 to 8-43

Pos	Part No	UN	Qty	Description	Page No
DIMC/FLEX (See drawing on page: 8-42)					
010	2905401-0000		1	BRACKET	
NO DIMC NO PT (See drawing on page: 8-40)					
010	2734983-0000		1	BRACKET	
Common Parts					
020	2734984-0000		2	SPACER DISC	
030	2599941-0000		4	SPACER	
100	312101-0632		2	SCREW M6S M16X60 FZB	
110	312105-0548		2	SCREW M6S ISO 4014 M12X80 A480	
120	312105-0640		2	SCREW M6S ISO 4014 M16X100 A480	
130	312311-0491		2	SCREW ISO4028 M10X20 FZB	
140	312601-0324		2	HEXAGON NUT, DIN 934 M16 8 FZB	
150	315105-0178		2	WASHER BRB 13X24 RFR	

Pos	Part No	UN	Qty	Description	Page No

BRACKET

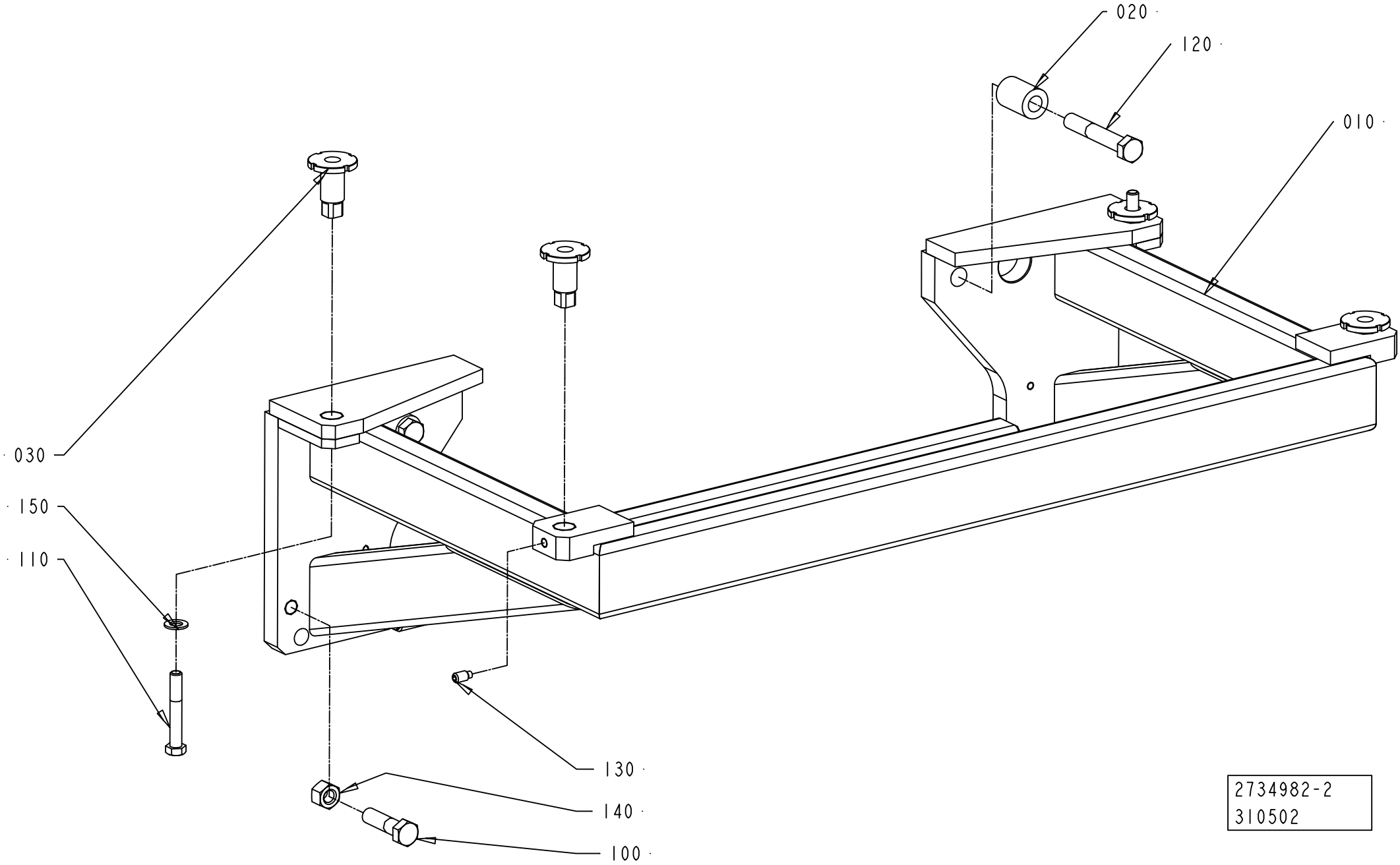

ECM: 342679 - 20080215
Group number: 2734982-0100
Assembly Drawing: 2734982-2_1_AA

This list covers pages from 8-40 to 8-43

Pos	Part No	UN	Qty	Description	Page No
DIMC/FLEX (See drawing on page: 8-42)					
010	2905401-0000		1	BRACKET	
NO DIMC NO PT (See drawing on page: 8-40)					
010	2734983-0000		1	BRACKET	
Common Parts					
020	2734984-0000		2	SPACER DISC	
030	2599941-0000		4	SPACER	
100	312101-0632		2	SCREW M6S M16X60 FZB	
110	312105-0548		2	SCREW M6S ISO 4014 M12X80 A480	
120	312105-0640		2	SCREW M6S ISO 4014 M16X100 A480	
130	312311-0491		2	SCREW ISO4028 M10X20 FZB	
140	312601-0324		2	HEXAGON NUT, DIN 934 M16 8 FZB	
150	315105-0178		2	WASHER BRB 13X24 RFR	

Pos	Part No	UN	Qty	Description	Page No

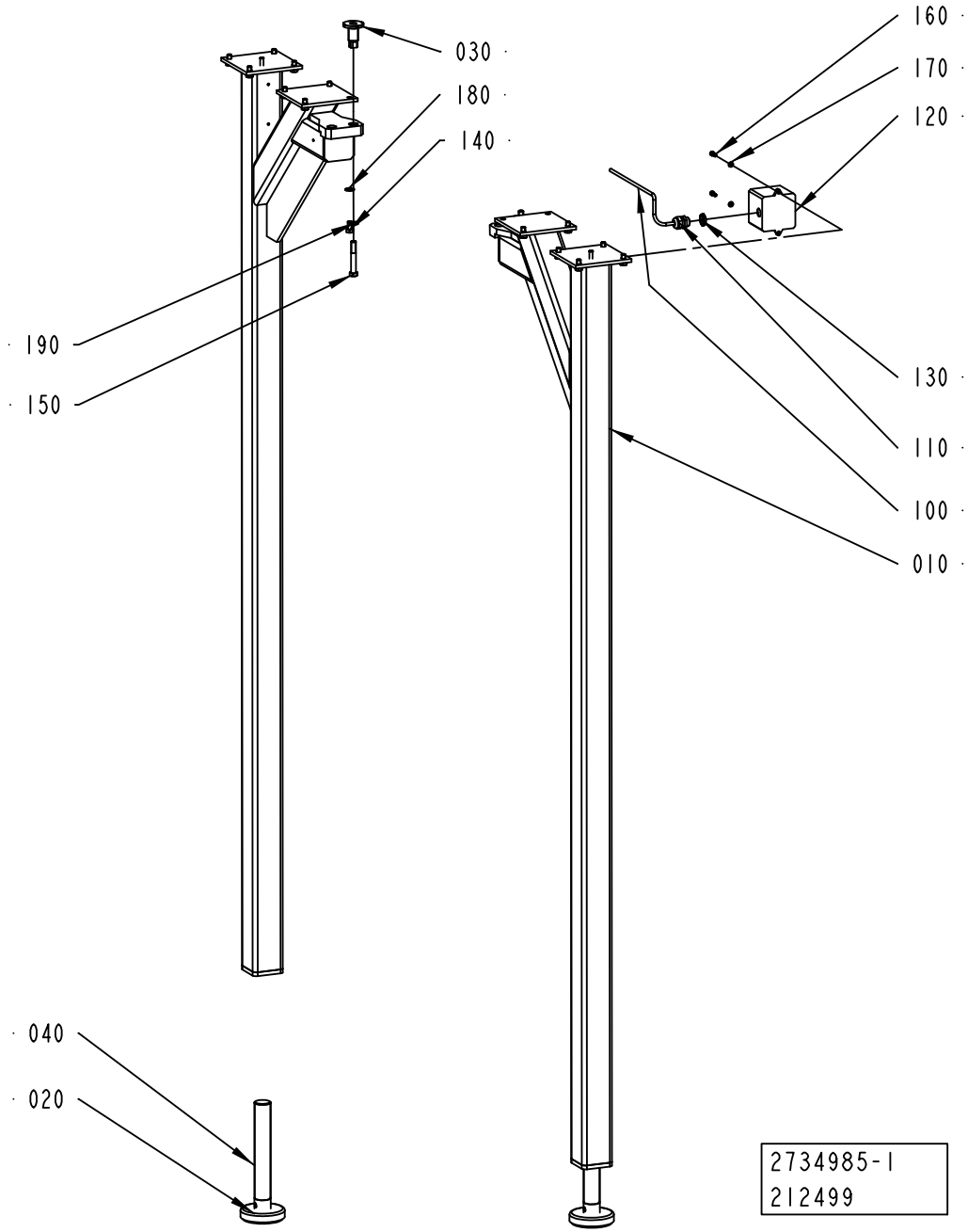
030
180
140
190
150
160
170
120
130
110
100
010
040
020
2734985-1
212499

ECM: 212824 - 20061102
Group number: 2734985-0100
Assembly Drawing: 2734985-1_1_AA

Pos	Part No	UN	Qty	Description	Page No
-					
010	2734986-0000		2	LEG	
020	90347-0080		2	DAMPER, TFE 1201	
030	2599941-0000		2	SPACER	
040	905373-0000		2	SCREW - LEG	
100	351150-0431	M	13	CABLE OLFLEX 2X0,75 MM2 LIGHT/GREY	
110	352103-0110		1	CABLE GLAND, STR 16, PR22,5/PG16	
120	90052-0011		1	HORN HOOTERT 24:48VDC.PT NO.1YA030221	
130	90099-0118		1	NUT, PR 20,4 (PG13,5)	
140	312105-0491		16	SCREW M6S ISO 4017 M10X20 A480	
150	312105-0548		2	SCREW M6S ISO 4014 M12X80 A480	
160	312115-0368		2	SCREW ISO4762 M6X16 A4 80	
170	315105-0153		2	WASHER BRB 6,4X12 RFR	
180	315105-0173		16	WASHER BRB 10,5X22 RFR	
190	315105-0178		2	WASHER BRB 13X24 RFR	

Pos	Part No	UN	Qty	Description	Page No

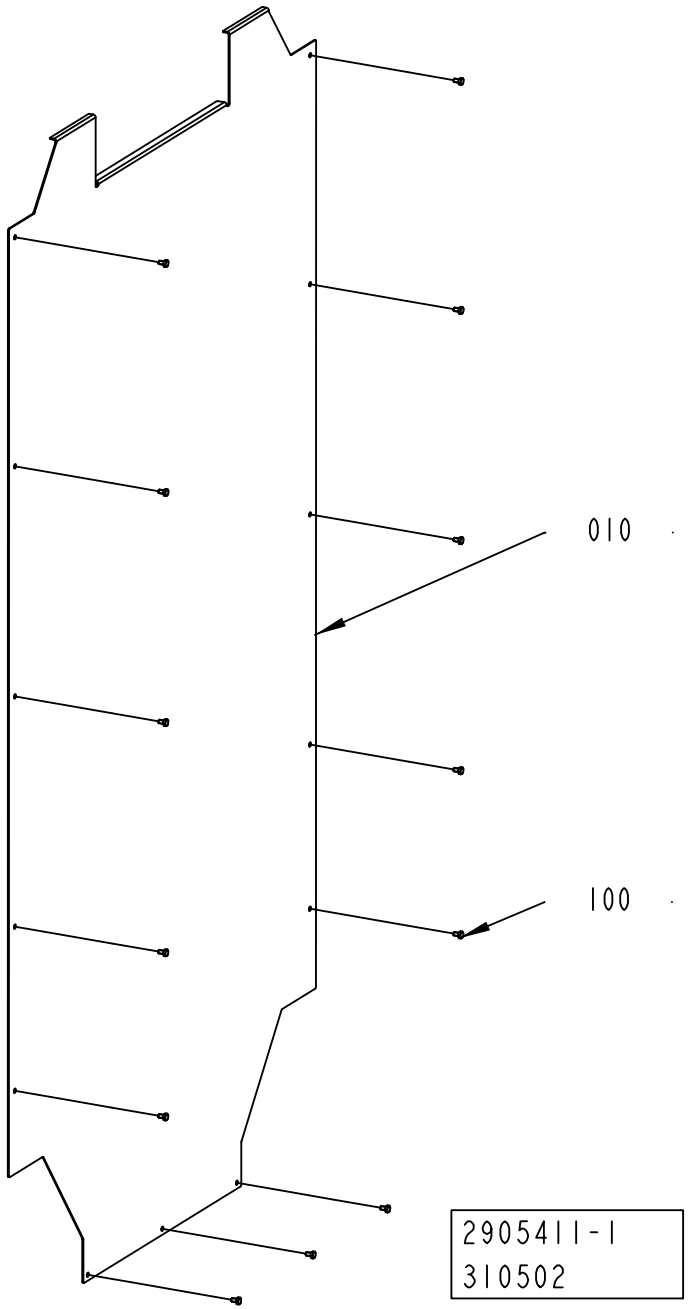
010
100
2905411-1
310502

ECM: 342872 - 20080215
Group number: 2905411-0100
Assembly Drawing: 2905411-1_1_AA

Pos	Part No	UN	Qty	Description	Page No
-					
010	2905412-0000		1	COVER PLATE	
100	312105-0364		13	SCREW M6S ISO 4017 M6X10 A480	

Pos	Part No	UN	Qty	Description	Page No

UPPER BENDING ROLLER

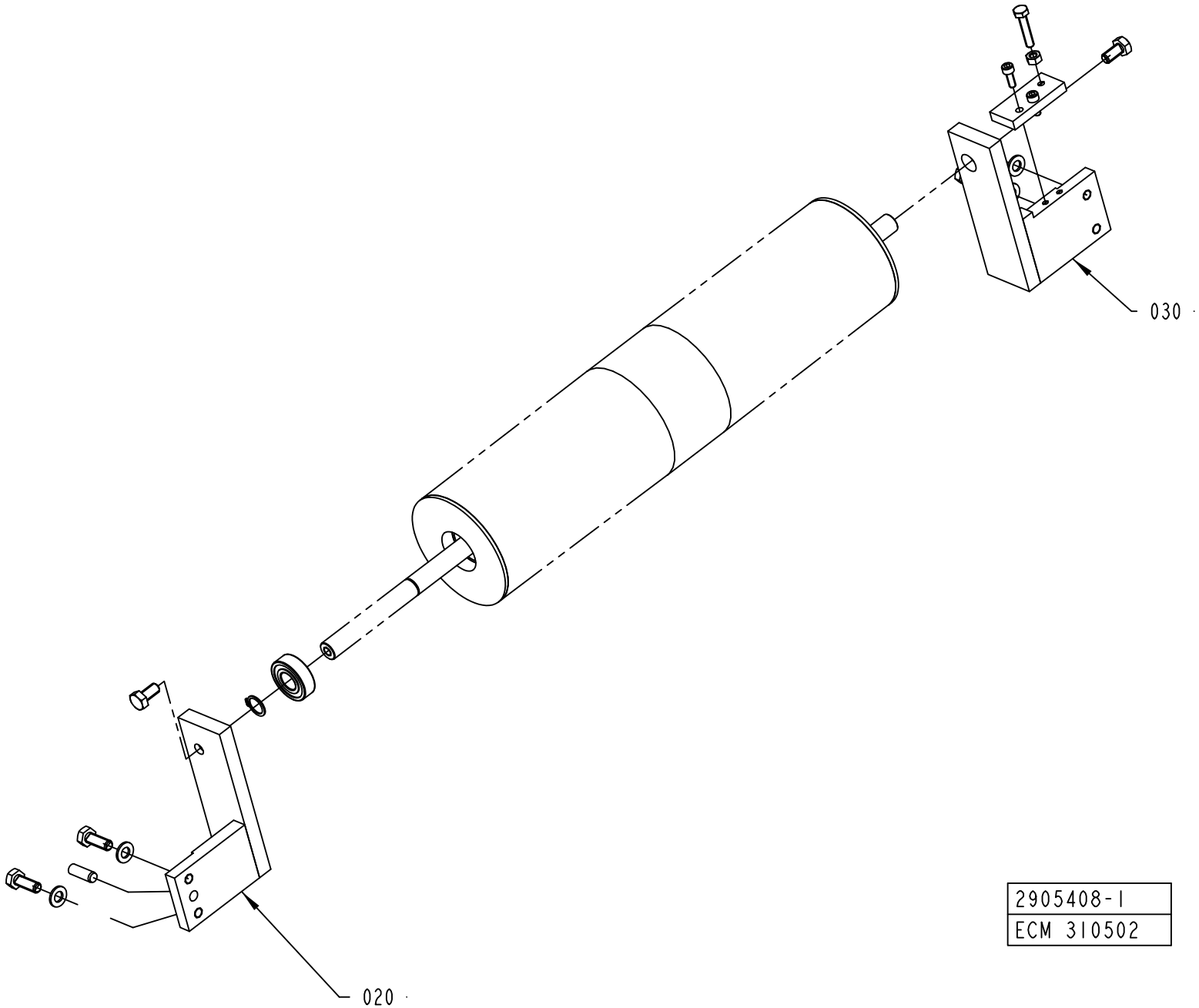

ECM: 310507 - 20070620
Group number: 2905408-0100
Assembly Drawing: 2905408-1_1_AA

Pos	Part No	UN	Qty	Description	Page No
-					
020	2905409-0000		1	HOLDER	
030	2905410-0000		1	HOLDER	

Pos	Part No	UN	Qty	Description	Page No

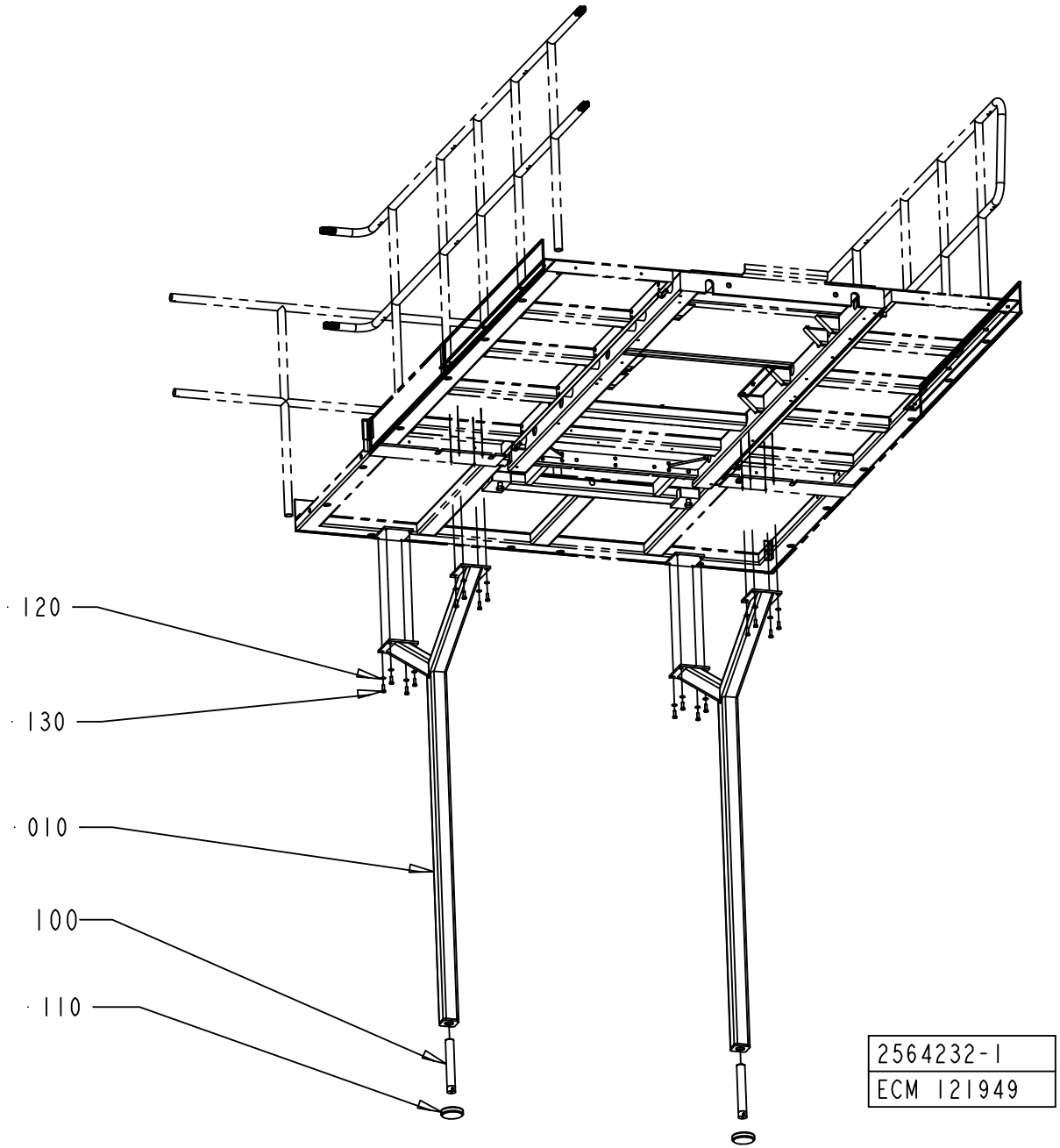
120
130
010
100
110
2564232-1
ECM 121949

ECM: 274029 - 20061102
Group number: 2564232-0100
Assembly Drawing: 2564232-1_1_AA

This list covers pages from 8-50 to 8-53

Pos	Part No	UN	Qty	Description	Page No
-					
010	2837177-0000		2	LEG	
10	2553117-0000		2	LEG	
100	90347-0080		2	DAMPER, TFE 1201	
110	905373-0000		2	SCREW - LEG	
120	315105-0173		16	WASHER BRB 10,5X22 RFR	
130	312105-0495		16	SCREW M6S ISO 4017 M10X30 A480	

Pos	Part No	UN	Qty	Description	Page No

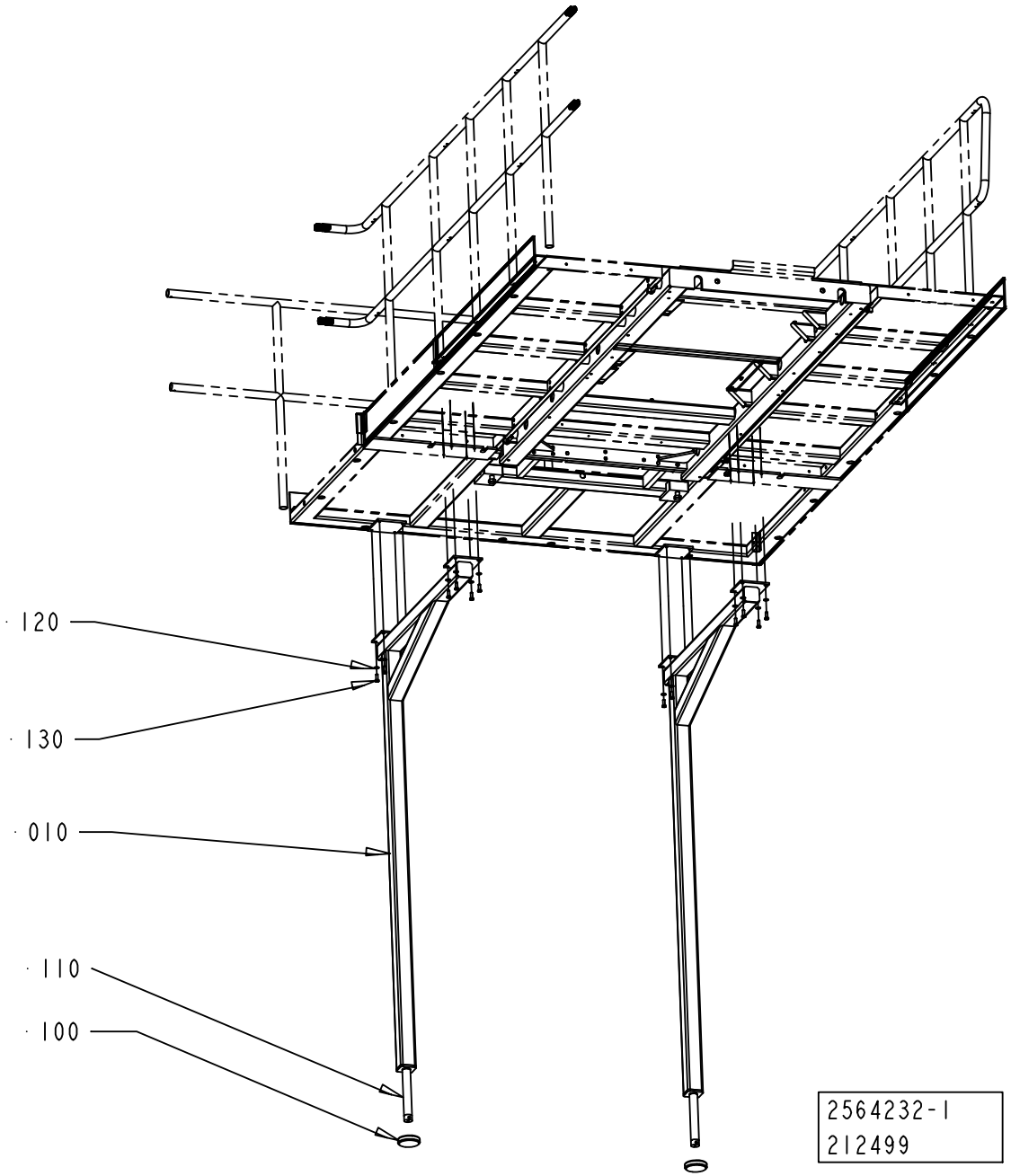
120
130
010
110
100
2564232-1
212499

ECM: 274029 - 20061102
Group number: 2564232-0100
Assembly Drawing: 2564232-1_1_AB

This list covers pages from 8-50 to 8-53

Pos	Part No	UN	Qty	Description	Page No
-					
010	2837177-0000		2	LEG	
10	2553117-0000		2	LEG	
100	90347-0080		2	DAMPER, TFE 1201	
110	905373-0000		2	SCREW - LEG	
120	315105-0173		16	WASHER BRB 10,5X22 RFR	
130	312105-0495		16	SCREW M6S ISO 4017 M10X30 A480	

Pos	Part No	UN	Qty	Description	Page No

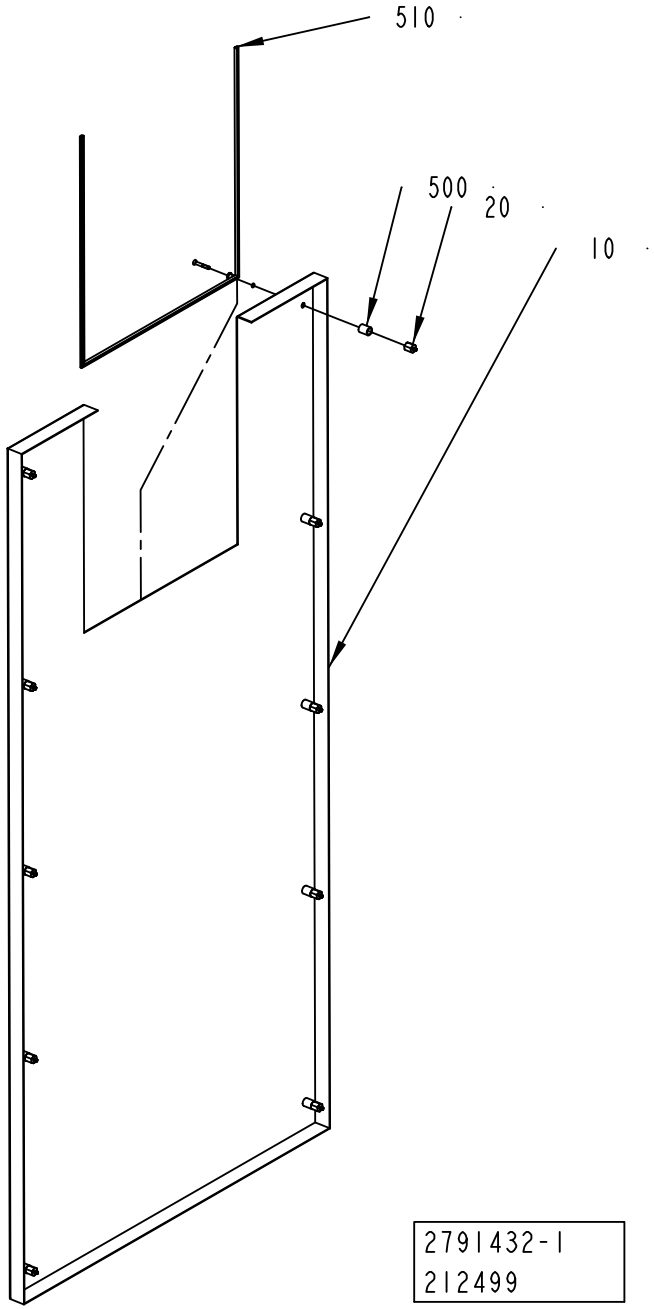
510
500
20
10
2791432-1
212499

ECM: 258554 - 20061102
Group number: 2791432-0100
Assembly Drawing: 2791432-1_1_AA

Pos	Part No	UN	Qty	Description	Page No
-					
010	2791090-0000		1	COVER	
020	2791162-0000		10	SPACER SCREW	
500	90226-0458		10	MOUNTING SCREW	
510	90143-0060	MM	850	EDGE STRIP 9,5X6,3MM BLACK PVC	

Pos	Part No	UN	Qty	Description	Page No

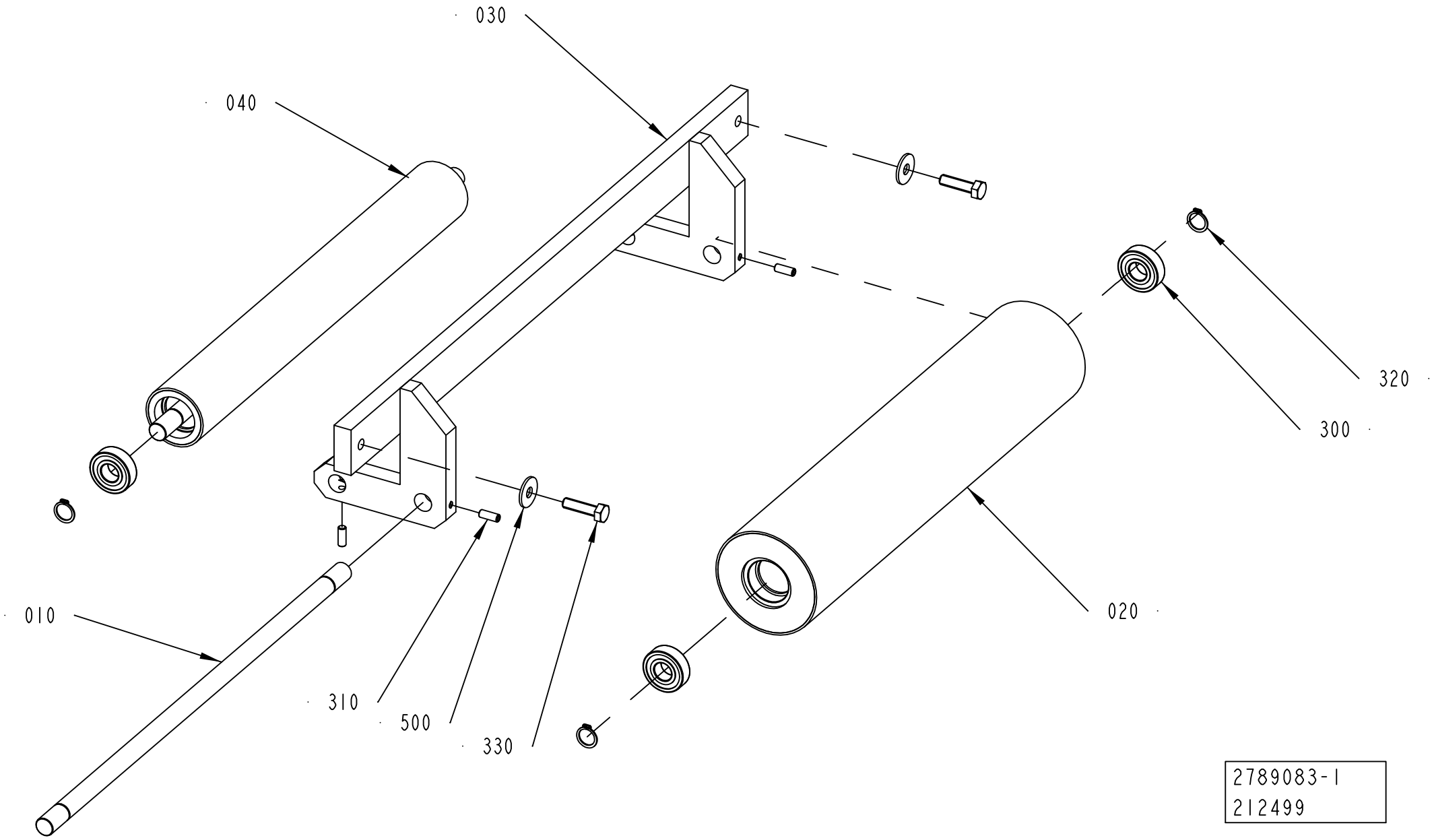
030
040
320
300
020
010
310
500
330
2789083-1
212499

ECM: 342685 - 20080215
Group number: 2789083-0100
Assembly Drawing: 2789083-1_1_AA

Pos	Part No	UN	Qty	Description	Page No
-					
010	2506666-0000		2	AXEL	
020	2605877-0000		1	BENDING ROLLER	
030	2789084-0000		1	ROLLER BRACKET	
040	2506661-0000		1	ROLLER	
300	321313-0102		4	BALL BEARING, 15X35X11 MM	
310	312318-0368		4	SCREW ISO4029 M6X16 A4	
320	315751-0112		4	RETAINING RING FOR SHAFT DIN 471 15 SS	
330	312105-0455		2	SCREW M6S ISO 4017 M8X30 A480	
500	90005-0116		2	WASHER PLAIN ROUND 8,4(M8)/24, H=2	

Pos	Part No	UN	Qty	Description	Page No

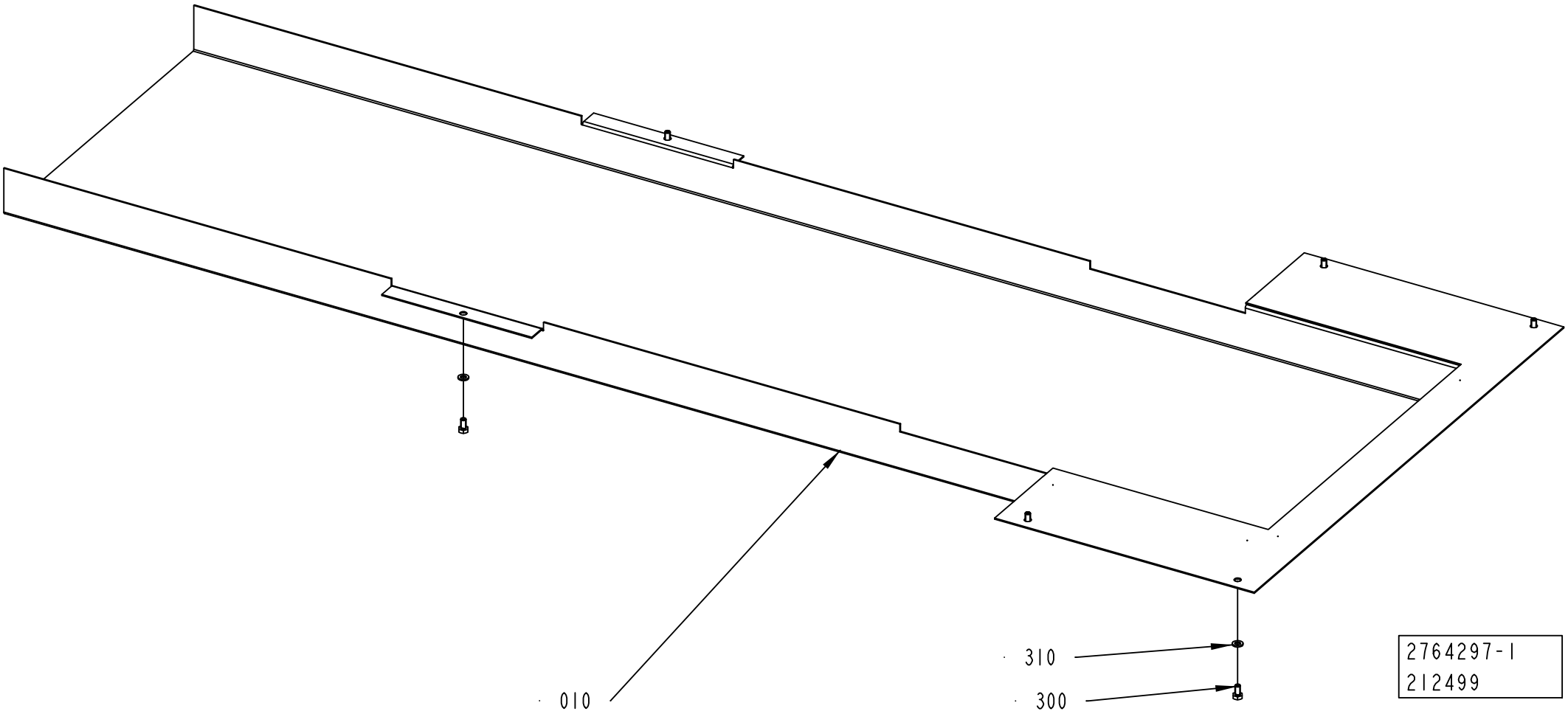
010
310
300
2764297-1
212499

ECM: 274013 - 20061102
Group number: 2764297-0100
Assembly Drawing: 2764297-1_1_AA

Pos	Part No	UN	Qty	Description	Page No
-					
010	2764286-0000		1	CABLE DUCT	
300	312105-0366		6	SCREW M6S ISO 4017 M6X12 A480	
310	315105-0153		6	WASHER BRB 6,4X12 RFR	

Pos	Part No	UN	Qty	Description	Page No

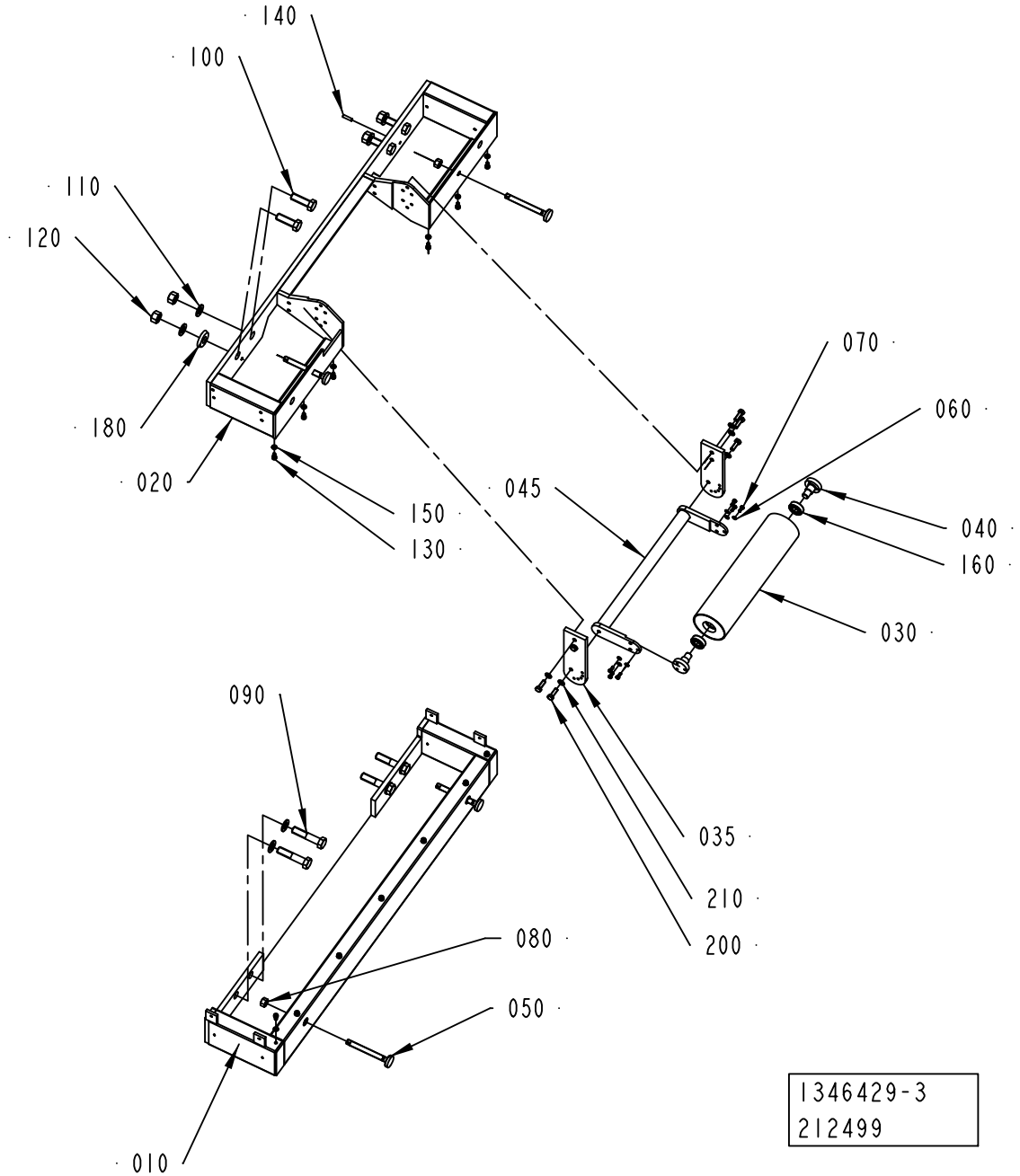
140
100
110
120
180
020
150
130
045
070
060
040
160
030
090
035
210
200
080
050
010
1346429-3
212499

ECM: 341044 - 20080215
Group number: 1346429-0300
Assembly Drawing: 1346429-3_1_AA

Pos	Part No	UN	Qty	Description	Page No
-					
010	1346421-0000		1	FRAME	
020	1346418-0000		1	FRAME	
030	1035882-0000		1	BENDING ROLLER	
035	2748621-0000		2	BRACKET	
040	1346401-0000		2	HOLDER	
045	2748618-0000		1	REEL HOLDER	
050	1346399-0000		4	DISTANCE	
060	315105-0146		6	WASHER BRB 5,3X10 RFR	
070	312105-0327		6	SCREW M6S ISO 4017 M5X12 A480	
080	312605-0322		4	HEXAGON NUT, M6M M12 A280	
090	312105-0635		4	SCREW M6S ISO 4014 M16X75 A480	
100	312105-0630		4	SCREW M6S ISO 4017 M16X50 A480	
110	315105-0186		8	WASHER BRB 17X30 RFR	
120	312605-0324		4	HEXAGON NUT, M6M M16 A280	
130	312115-0366		13	SCREW ISO4762 M6X12 A4 80	
140	311103-0355		2	PARALLEL PIN ISO 2338 6M6X25 A1	
150	315105-0153		13	WASHER BRB 6,4X12 RFR	
160	321313-0102		2	BALL BEARING, 15X35X11 MM	
180	1548199-0000		1	WASHER	
200	312105-0453		6	SCREW M6S ISO 4017 M8X25 A480	
210	315105-0165		6	WASHER BRB 8,4X16 RFR	

Pos	Part No	UN	Qty	Description	Page No

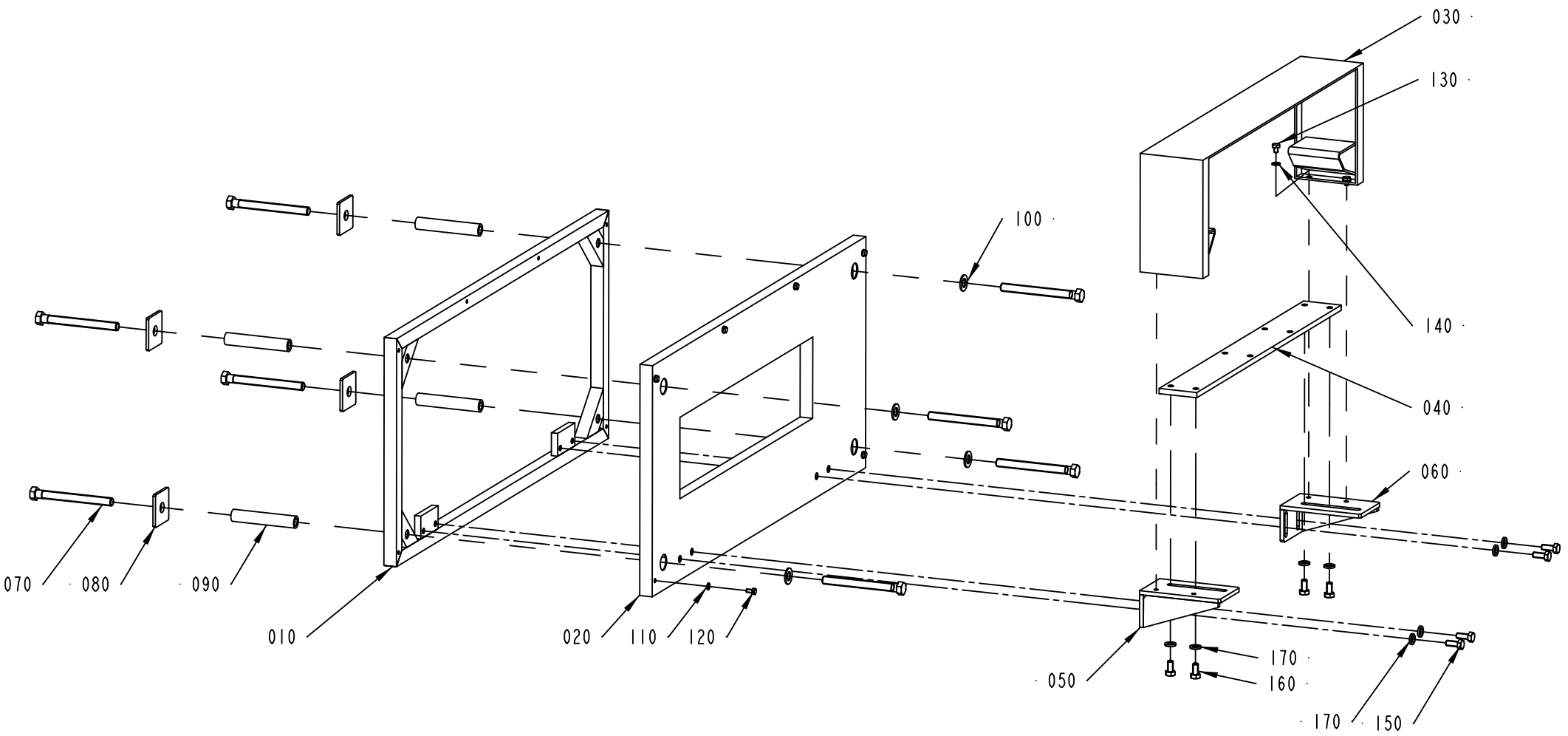

1346431-1
ECN 84465

ECM: 177923 - 20041005
Group number: 1346431-0100
Assembly Drawing: 1346431-1_1_AB

Pos	Part No	UN	Qty	Description	Page No
-					
010	1346417-0000		1	FRAME	
020	1346406-0000		1	COVER PLATE	
030	1346407-0000		1	COVER	
040	1346402-0000		1	PLATE	
050	1346410-0000		1	BRACKET	
060	1346411-0000		1	BRACKET	
070	476202-0000		8	SCREW	
080	1346405-0000		4	WASHER	
090	476201-0000		4	SLEEVE	
100	315105-0178		4	WASHER BRB 13X24 RFR	
110	315105-0146		6	WASHER BRB 5,3X10 RFR	
120	312105-0325		6	SCREW M6S ISO 4017 M5X10 A480	
130	312105-0364		4	SCREW M6S ISO 4017 M6X10 A480	
140	315105-0153		4	WASHER BRB 6,4X12 RFR	
150	312105-0451		4	SCREW M6S ISO 4017 M8X20 A480	
160	312105-0449		4	SCREW M6S ISO 4017 M8X16 A480	
170	315115-0165		8	WASHER PLAIN, TBRB 8,4/16 H=3	

Pos	Part No	UN	Qty	Description	Page No

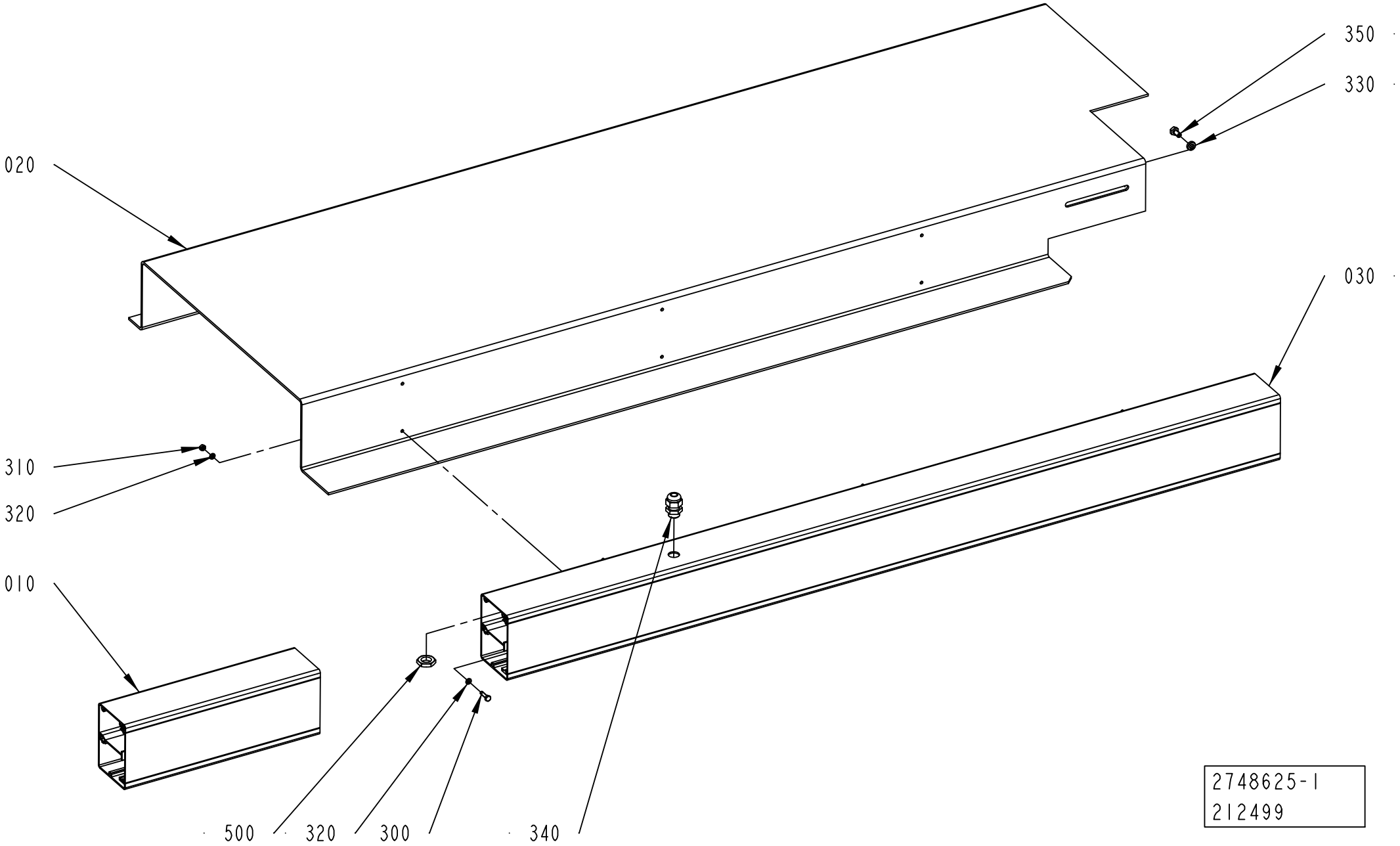
350
330
020
030
310
320
010
500
320
300
340
2748625-1
212499

ECM: 310510 - 20070620
Group number: 2748625-0100
Assembly Drawing: 2748625-1_1_AA

This list covers pages from 8-64 to 8-67

Pos	Part No	UN	Qty	Description	Page No
DIMC/FLEX (See drawing on page: 8-66)					
020	2905402-0000		1	COVER	
030	2905403-0000		1	CABLE DUCT	
NO DIMC NO PT, NO DIMC PT/FLEX (See drawing on page: 8-64)					
020	2748626-0000		1	COVER	
030	2748627-0000		1	CABLE DUCT	
Common Parts					
010	1346400-0000		1	CABLE DUCT	
300	312105-0293		6	SCREW M6S ISO 4017 M4X16 A470	
310	312605-0312		6	HEXAGON NUT, M6M M4 A280	
320	315105-0136		12	WASHER BRB 4,3X8 RFR	
330	315115-0153		2	WASHER PLAIN, TBRB 6,4/12 H=3	
340	352103-0101		1	CABLE GLAND, ST 9, PR15,2/PG9	
350	312105-0366		2	SCREW M6S ISO 4017 M6X12 A480	
500	90099-0104		1	NUT, PR 15,2 (PG9)	

Pos	Part No	UN	Qty	Description	Page No

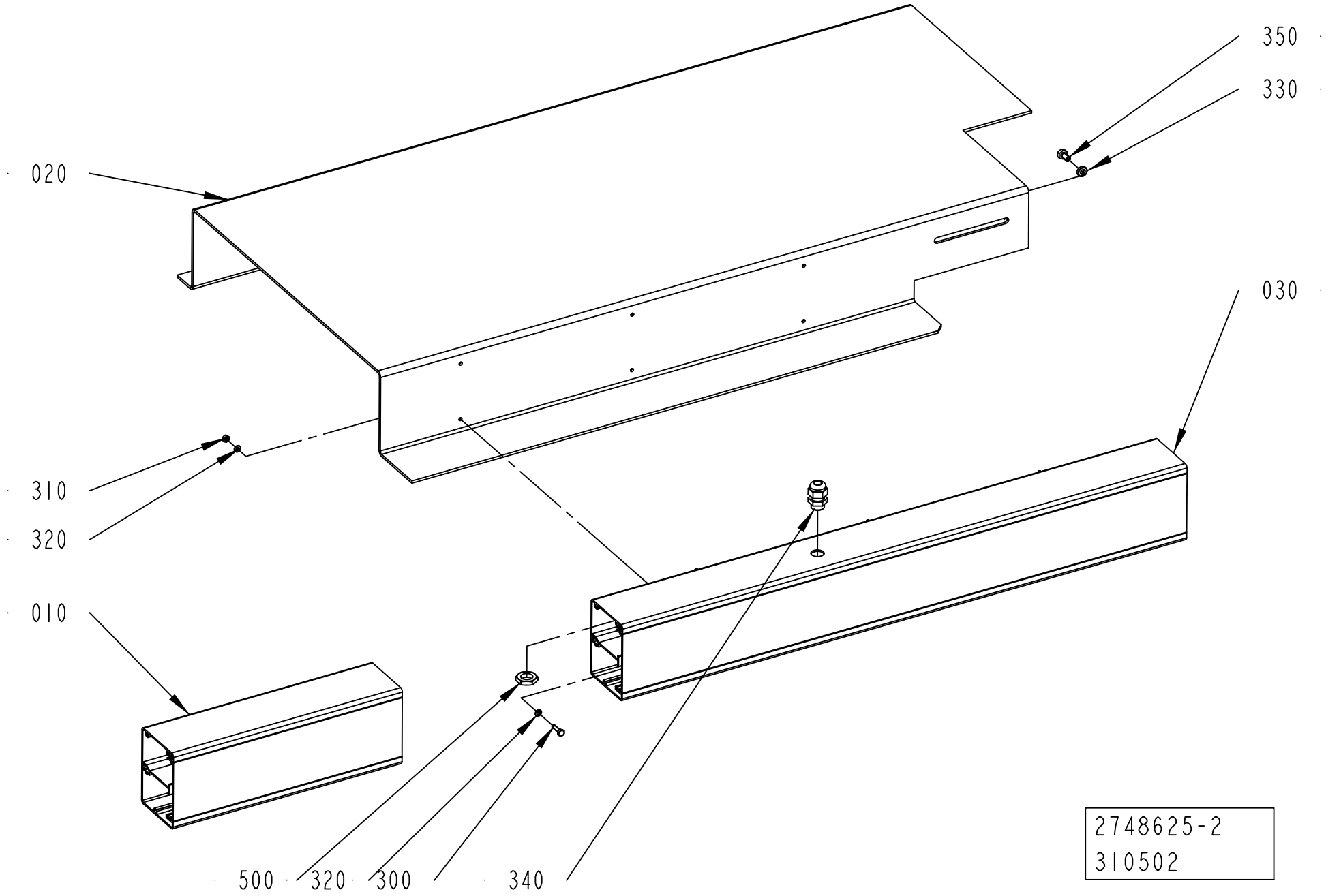
350
330
020
030
310
320
010
500
320
300
340
2748625-2
310502

ECM: 310510 - 20070620
Group number: 2748625-0100
Assembly Drawing: 2748625-2_1_AA

This list covers pages from 8-64 to 8-67

Pos	Part No	UN	Qty	Description	Page No
DIMC/FLEX (See drawing on page: 8-66)					
020	2905402-0000		1	COVER	
030	2905403-0000		1	CABLE DUCT	
NO DIMC NO PT, NO DIMC PT/FLEX (See drawing on page: 8-64)					
020	2748626-0000		1	COVER	
030	2748627-0000		1	CABLE DUCT	
Common Parts					
010	1346400-0000		1	CABLE DUCT	
300	312105-0293		6	SCREW M6S ISO 4017 M4X16 A470	
310	312605-0312		6	HEXAGON NUT, M6M M4 A280	
320	315105-0136		12	WASHER BRB 4,3X8 RFR	
330	315115-0153		2	WASHER PLAIN, TBRB 6,4/12 H=3	
340	352103-0101		1	CABLE GLAND, ST 9, PR15,2/PG9	
350	312105-0366		2	SCREW M6S ISO 4017 M6X12 A480	
500	90099-0104		1	NUT, PR 15,2 (PG9)	

Pos	Part No	UN	Qty	Description	Page No

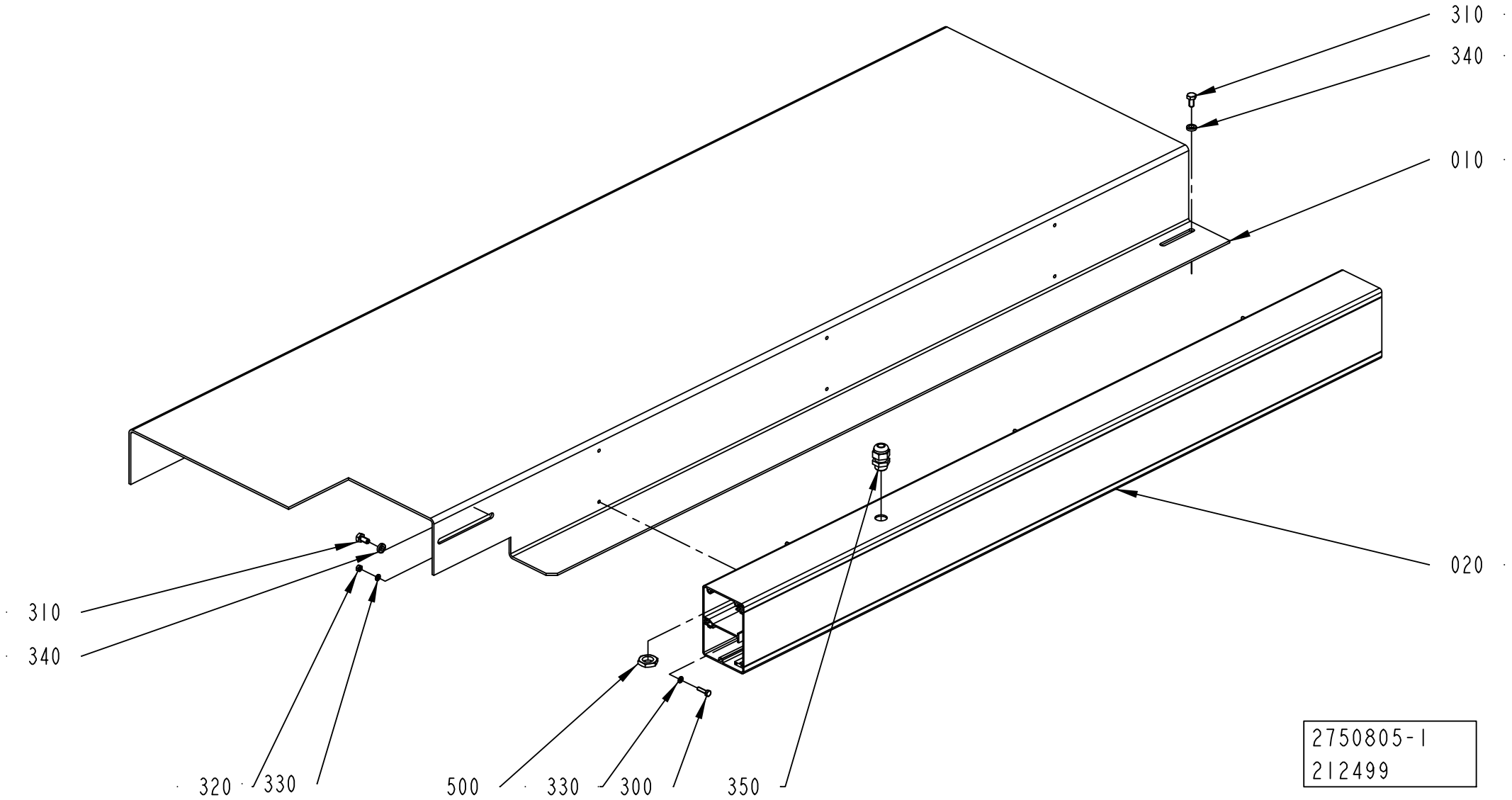
310
340
010
020
310
340
320
330
500
330
300
350
2750805-1
212499

ECM: 342681 - 20080215
Group number: 2750805-0100
Assembly Drawing: 2750805-1_1_AA

This list covers pages from 8-68 to 8-71

Pos	Part No	UN	Qty	Description	Page No
DIMC/FLEX (See drawing on page: 8-70)					
010	2905404-0000		1	COVER	
020	2905405-0000		1	CABLE DUCT	
NO DIMC NO PT, NO DIMC PT/FLEX (See drawing on page: 8-68)					
010	2750806-0000		1	COVER	
020	2750807-0000		1	CABLE DUCT	
Common Parts					
300	312105-0293		6	SCREW M6S ISO 4017 M4X16 A470	
310	312105-0366		4	SCREW M6S ISO 4017 M6X12 A480	
320	312605-0312		6	HEXAGON NUT, M6M M4 A280	
330	315105-0136		12	WASHER BRB 4,3X8 RFR	
340	315115-0153		4	WASHER PLAIN, TBRB 6,4/12 H=3	
350	352103-0101		1	CABLE GLAND, ST 9, PR15,2/PG9	
500	90099-0104		1	NUT, PR 15,2 (PG9)	

Pos	Part No	UN	Qty	Description	Page No

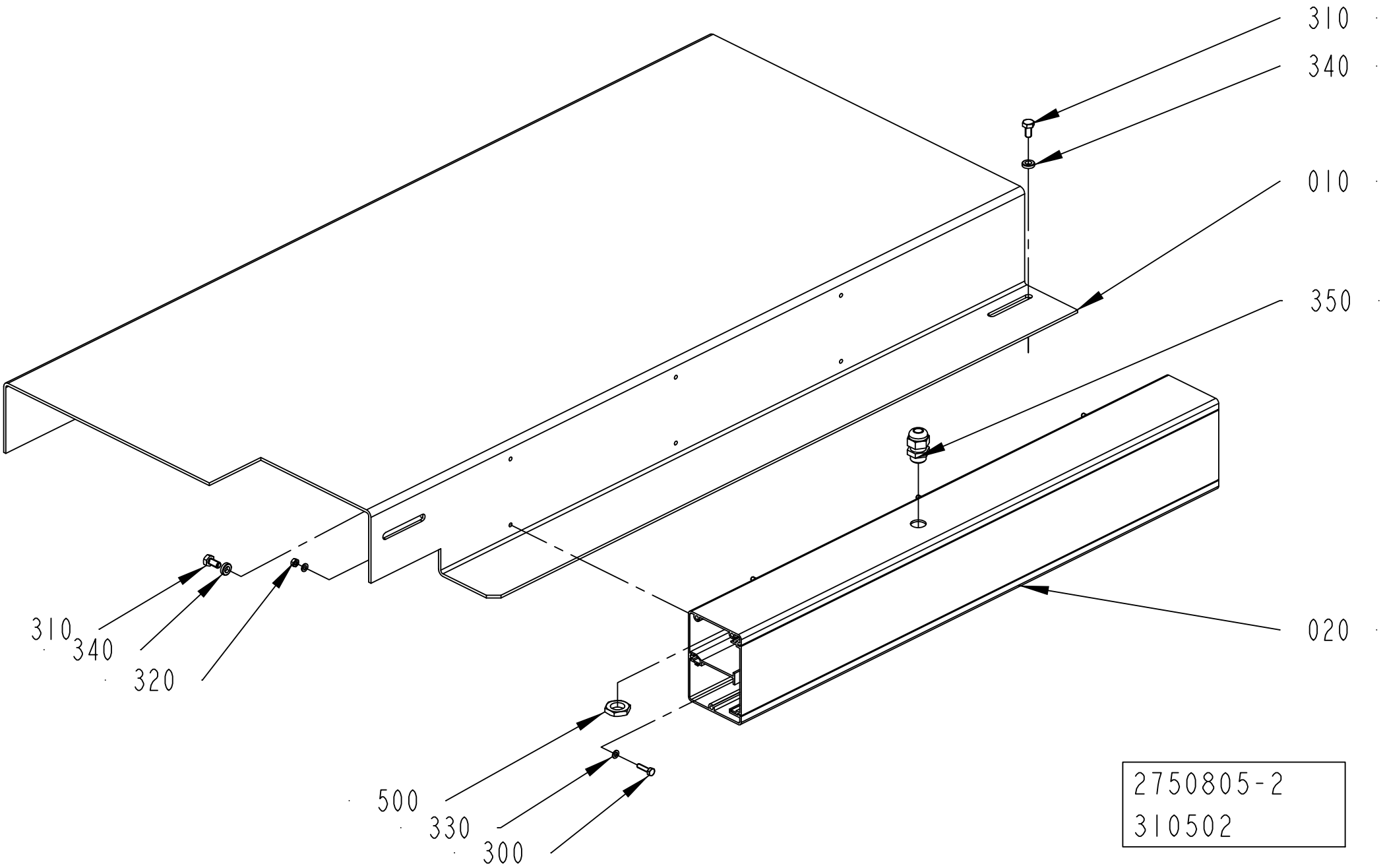
310
340
010
350
020
310
340
320
500
330
300
2750805-2
310502

ECM: 342681 - 20080215
Group number: 2750805-0100
Assembly Drawing: 2750805-2_1_AA

This list covers pages from 8-68 to 8-71

Pos	Part No	UN	Qty	Description	Page No
DIMC/FLEX (See drawing on page: 8-70)					
010	2905404-0000		1	COVER	
020	2905405-0000		1	CABLE DUCT	
NO DIMC NO PT, NO DIMC PT/FLEX (See drawing on page: 8-68)					
010	2750806-0000		1	COVER	
020	2750807-0000		1	CABLE DUCT	
Common Parts					
300	312105-0293		6	SCREW M6S ISO 4017 M4X16 A470	
310	312105-0366		4	SCREW M6S ISO 4017 M6X12 A480	
320	312605-0312		6	HEXAGON NUT, M6M M4 A280	
330	315105-0136		12	WASHER BRB 4,3X8 RFR	
340	315115-0153		4	WASHER PLAIN, TBRB 6,4/12 H=3	
350	352103-0101		1	CABLE GLAND, ST 9, PR15,2/PG9	
500	90099-0104		1	NUT, PR 15,2 (PG9)	

Pos	Part No	UN	Qty	Description	Page No

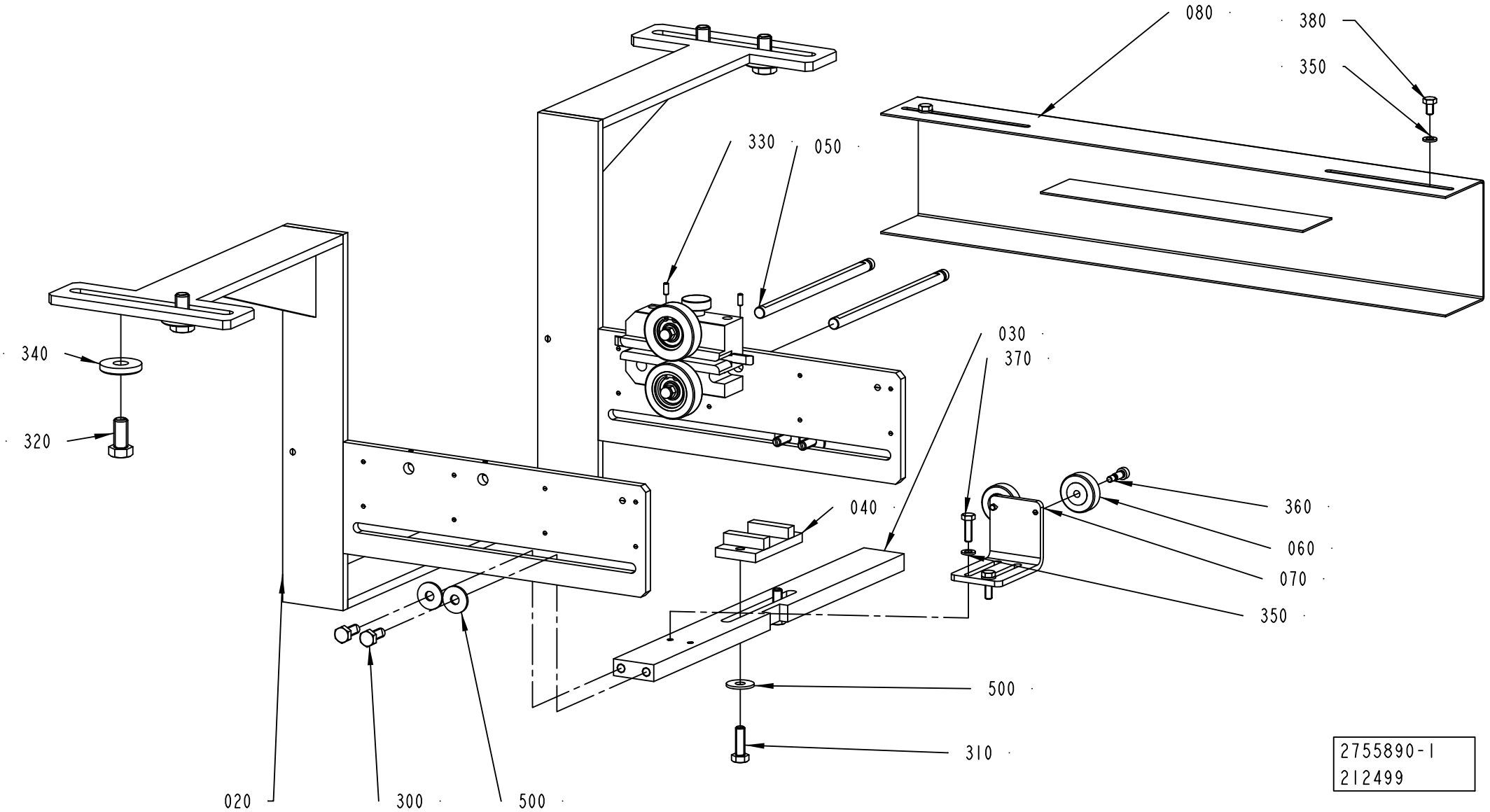
080
380
350
330
050
340
320
030
370
040
360
060
070
350
500
310
020
300
500
2755890-1
212499

ECM: 213434 - 20061102
Group number: 2755890-0100
Assembly Drawing: 2755890-1_1_AA

Pos	Part No	UN	Qty	Description	Page No
-					
010	2764290-0100		1	WEB GUIDE	**8-75**
020	2745172-0000		1	BRACKET	
030	2745173-0000		1	BAR	
040	2745231-0000		1	GUIDE	
050	2748619-0000		2	SHAFT	
060	1558911-0000		2	PRESSURE ROLLER	
070	2764291-0000		1	BRACKET	
080	2764292-0000		1	CABLE DUCT	
300	312105-0451		4	SCREW M6S ISO 4017 M8X20 A480	
310	312105-0453		2	SCREW M6S ISO 4017 M8X25 A480	
320	312105-0534		4	SCREW M6S ISO 4017 M12X25 A480	
330	312318-0289		2	SCREW ISO4029 M4X10 A4	
340	315121-0178		4	WASHER PLAIN, TBRSB 13/36 H=6	
350	315105-0153		4	WASHER BRB 6,4X12 RFR	
360	312180-0366		2	SCREW ISO7379 H6X12	
370	312105-0370		2	SCREW M6S ISO 4017 M6X20 A480	
380	312105-0364		2	SCREW M6S ISO 4017 M6X10 A480	
500	90005-0116		6	WASHER PLAIN ROUND 8,4(M8)/24, H=2	

Pos	Part No	UN	Qty	Description	Page No

Machine Type | Group Description | Used-In | Group Number | Page No

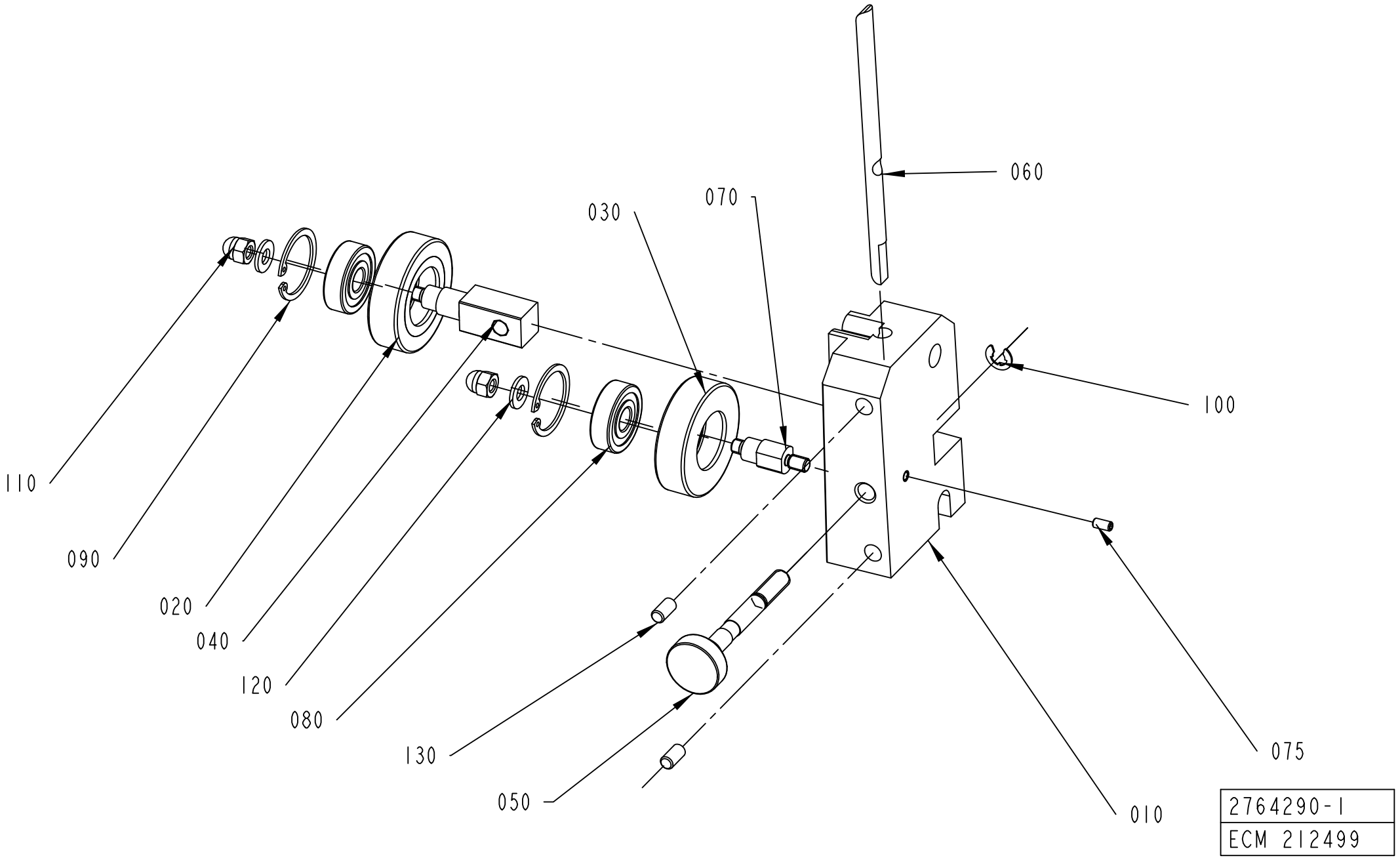
060
070
030
100
110
090
020
040
120
080
130
050
075
010
2764290-1
ECM 212499

ECM: 383460 - 20090402
Group number: 2764290-0100
Assembly Drawing: 2764290-1_1_AA

Pos	Part No	UN	Qty	Description	Page No
-					
010	1524375-0000		1	BRACKET	
020	1036623-0000		1	GUIDE ROLLER	
030	1036622-0000		1	GUIDE ROLLER	
040	1317711-0000		1	SHAFT	
050	1317712-0000		1	SHAFT	
060	1512526-0000		1	STEERING	
070	583727-0000		1	SHAFT	
075	312318-0287		1	SCREW ISO4029 M4X8 A4	
080	321313-0100		2	BALL BEARING, 10X30X9 MM	
090	315753-0122		2	RETAINING RING FOR BORE DIN 472 30 A2	
100	315755-0108		1	RETAINING RING SHAFT DIN 6799 6 A2	
110	312705-0316		2	NUT HEX. DOMED CAP MHM-6 M6 A280	
120	315105-0156		2	WASHER BRB 6,7X14 RFR	
130	312318-0366		2	SCREW ISO4029 M6X12 A4	

Pos	Part No	UN	Qty	Description	Page No

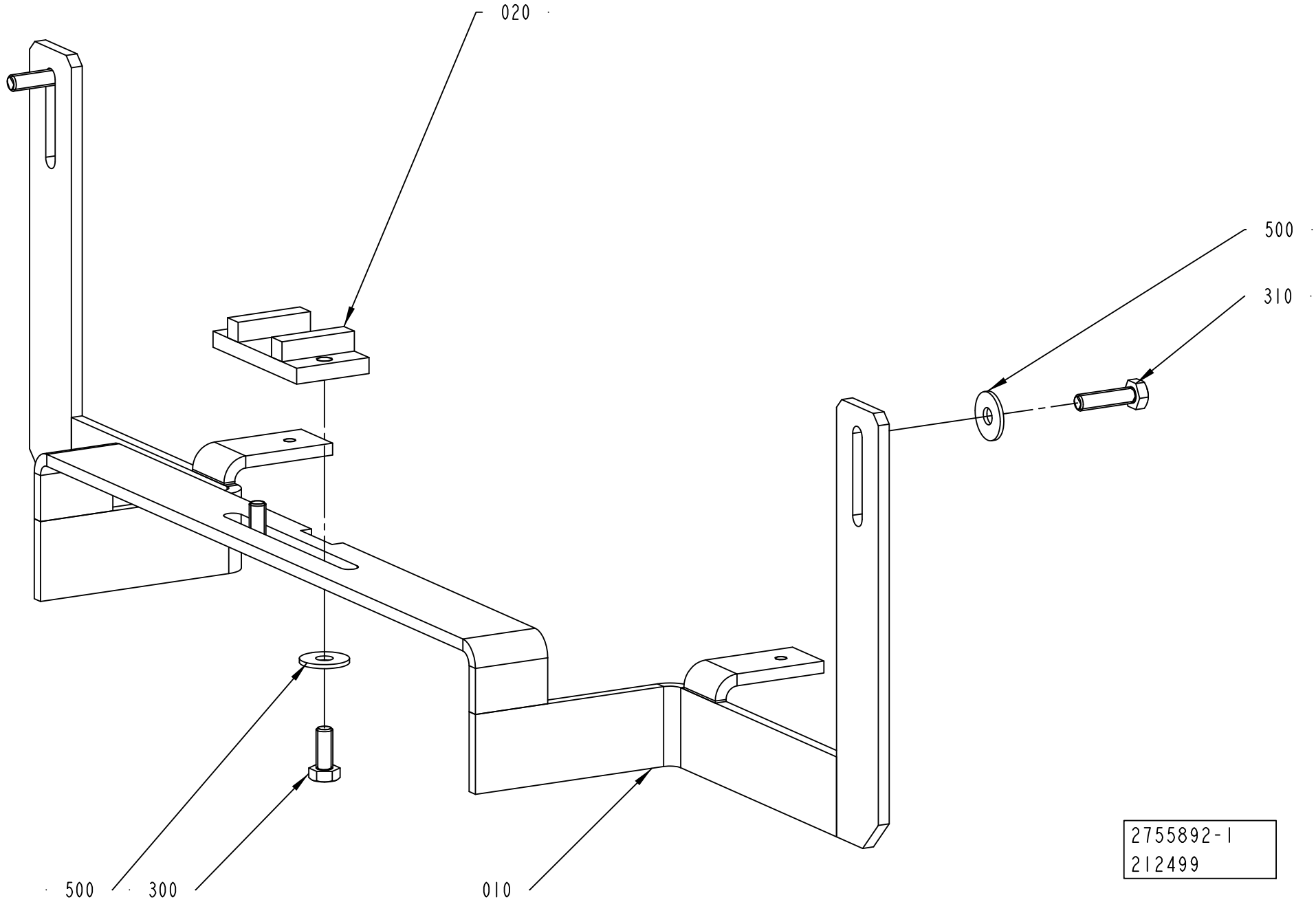
020
500
310
500
300
010
2755892-1
212499

ECM: 342682 - 20080215
Group number: 2755892-0100
Assembly Drawing: 2755892-1_1_AA

This list covers pages from 8-76 to 8-81

Pos	Part No	UN	Qty	Description	Page No
DIMC/FLEX (See drawing on page: 8-80)					
010	2905406-0000		1	SUPPORT	
NO DIMC NO PT (See drawing on page: 8-76)					
010	2745174-0000		1	BRACKET	
NO DIMC PT/FLEX (See drawing on page: 8-78)					
010	2789112-0000		1	BRACKET	
Common Parts					
020	2745231-0000		1	GUIDE	
300	312105-0451		2	SCREW M6S ISO 4017 M8X20 A480	
310	312105-0455		2	SCREW M6S ISO 4017 M8X30 A480	
500	90005-0116		4	WASHER PLAIN ROUND 8,4(M8)/24, H=2	

Pos	Part No	UN	Qty	Description	Page No

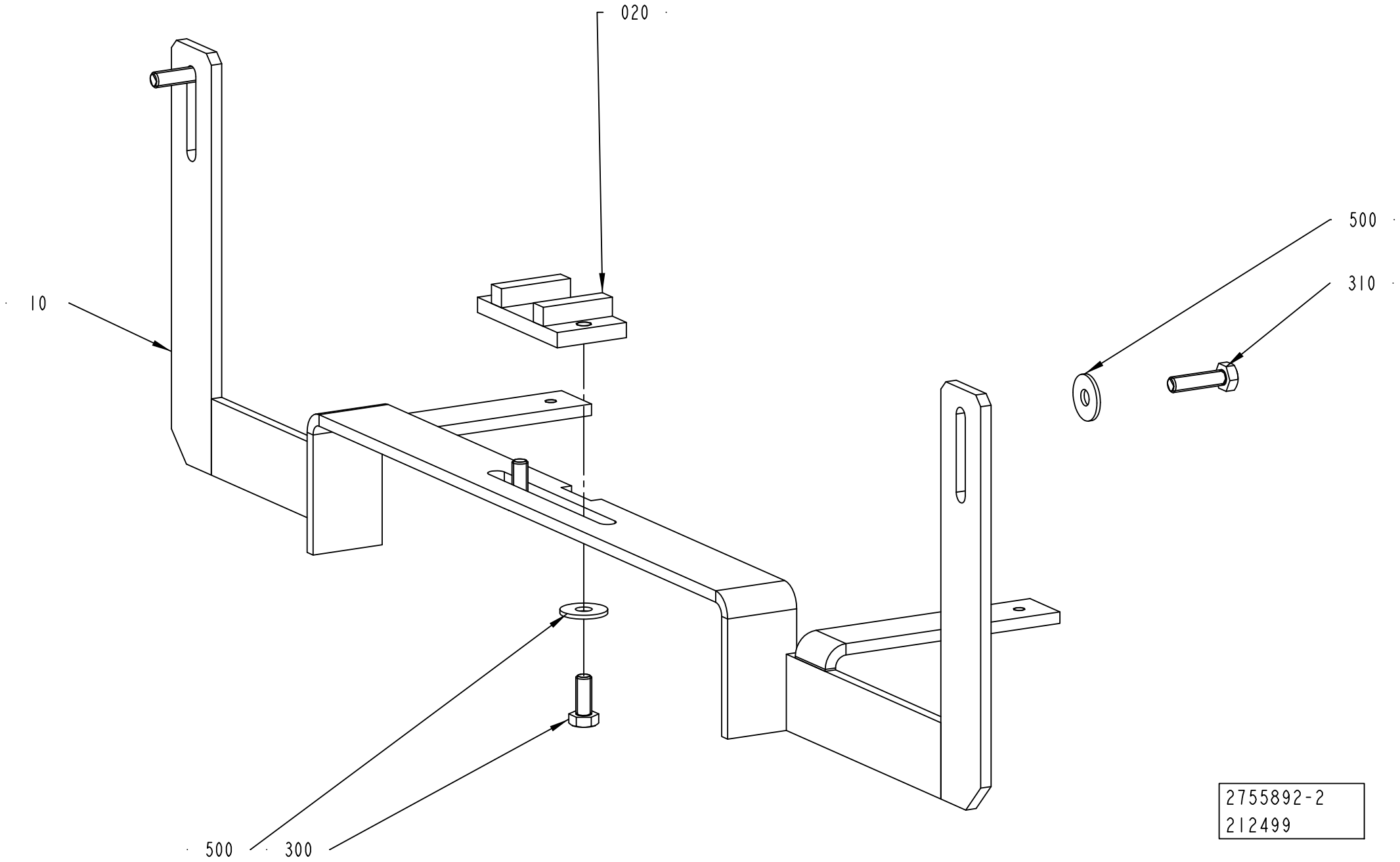
020
500
310
10
500
300
2755892-2
212499

ECM: 342682 - 20080215
Group number: 2755892-0100
Assembly Drawing: 2755892-2_1_AA

This list covers pages from 8-76 to 8-81

Pos	Part No	UN	Qty	Description	Page No
DIMC/FLEX (See drawing on page: 8-80)					
010	2905406-0000		1	SUPPORT	
NO DIMC NO PT (See drawing on page: 8-76)					
010	2745174-0000		1	BRACKET	
NO DIMC PT/FLEX (See drawing on page: 8-78)					
010	2789112-0000		1	BRACKET	
Common Parts					
020	2745231-0000		1	GUIDE	
300	312105-0451		2	SCREW M6S ISO 4017 M8X20 A480	
310	312105-0455		2	SCREW M6S ISO 4017 M8X30 A480	
500	90005-0116		4	WASHER PLAIN ROUND 8,4(M8)/24, H=2	

Pos	Part No	UN	Qty	Description	Page No

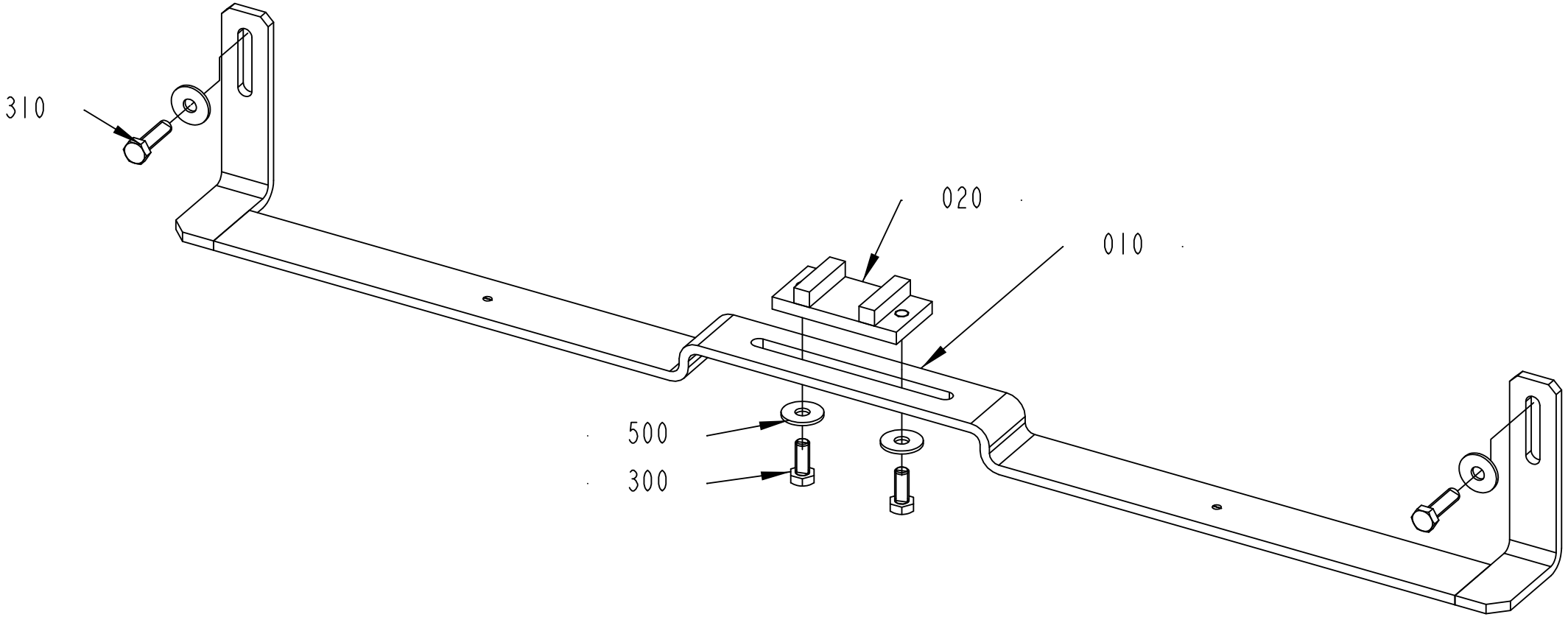

2755892-3
310502

ECM: 342682 - 20080215
Group number: 2755892-0100
Assembly Drawing: 2755892-3_1_AA

This list covers pages from 8-76 to 8-81

Pos	Part No	UN	Qty	Description	Page No
DIMC/FLEX (See drawing on page: 8-80)					
010	2905406-0000		1	SUPPORT	
NO DIMC NO PT (See drawing on page: 8-76)					
010	2745174-0000		1	BRACKET	
NO DIMC PT/FLEX (See drawing on page: 8-78)					
010	2789112-0000		1	BRACKET	
Common Parts					
020	2745231-0000		1	GUIDE	
300	312105-0451		2	SCREW M6S ISO 4017 M8X20 A480	
310	312105-0455		2	SCREW M6S ISO 4017 M8X30 A480	
500	90005-0116		4	WASHER PLAIN ROUND 8,4(M8)/24, H=2	

Pos	Part No	UN	Qty	Description	Page No

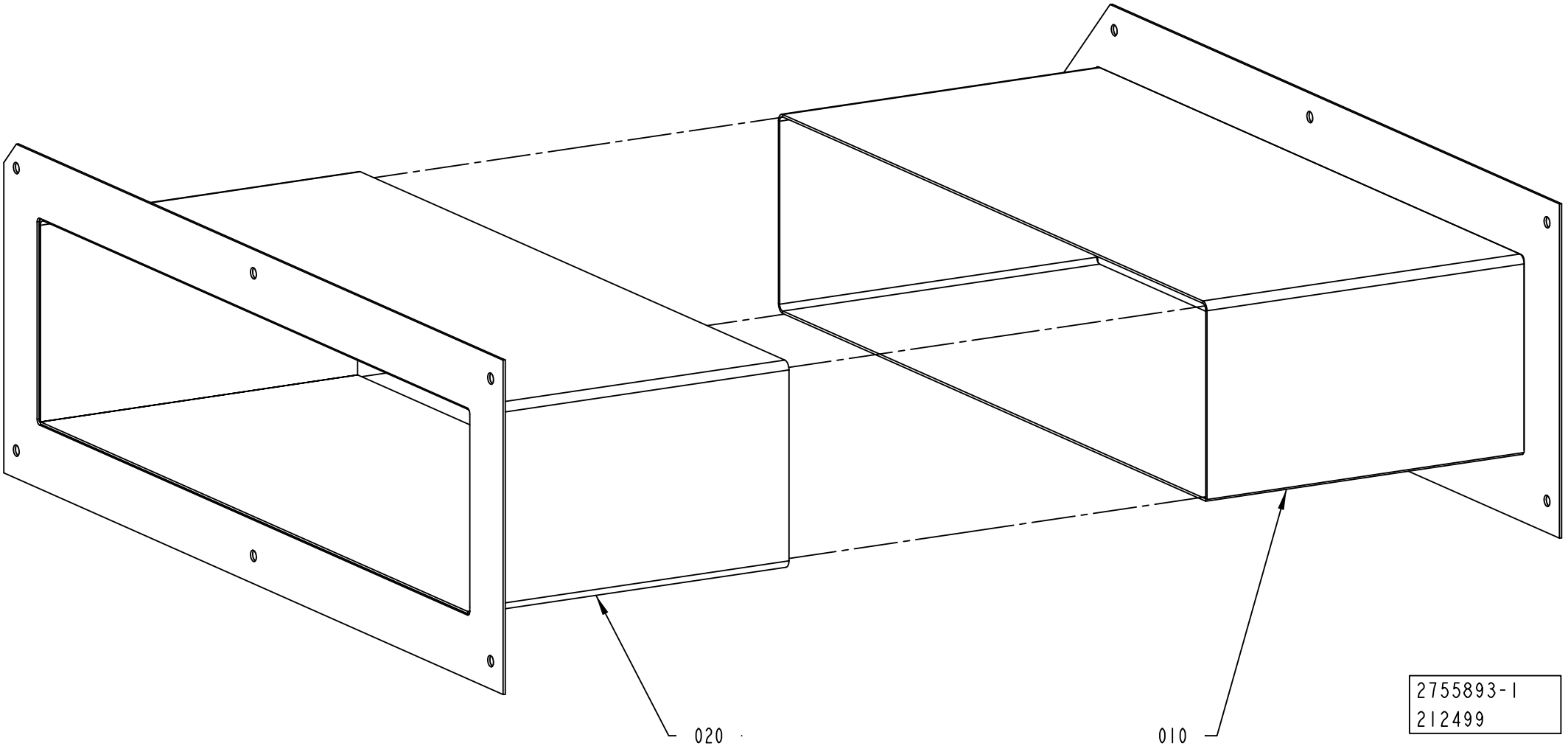
020
010
2755893-1
212499

ECM: 213368 - 20061102
Group number: 2755893-0100
Assembly Drawing: 2755893-1_1_AA

Pos	Part No	UN	Qty	Description	Page No
-					
010	2748623-0000		1	COVER	
020	2748624-0000		1	COVER	

Pos	Part No	UN	Qty	Description	Page No

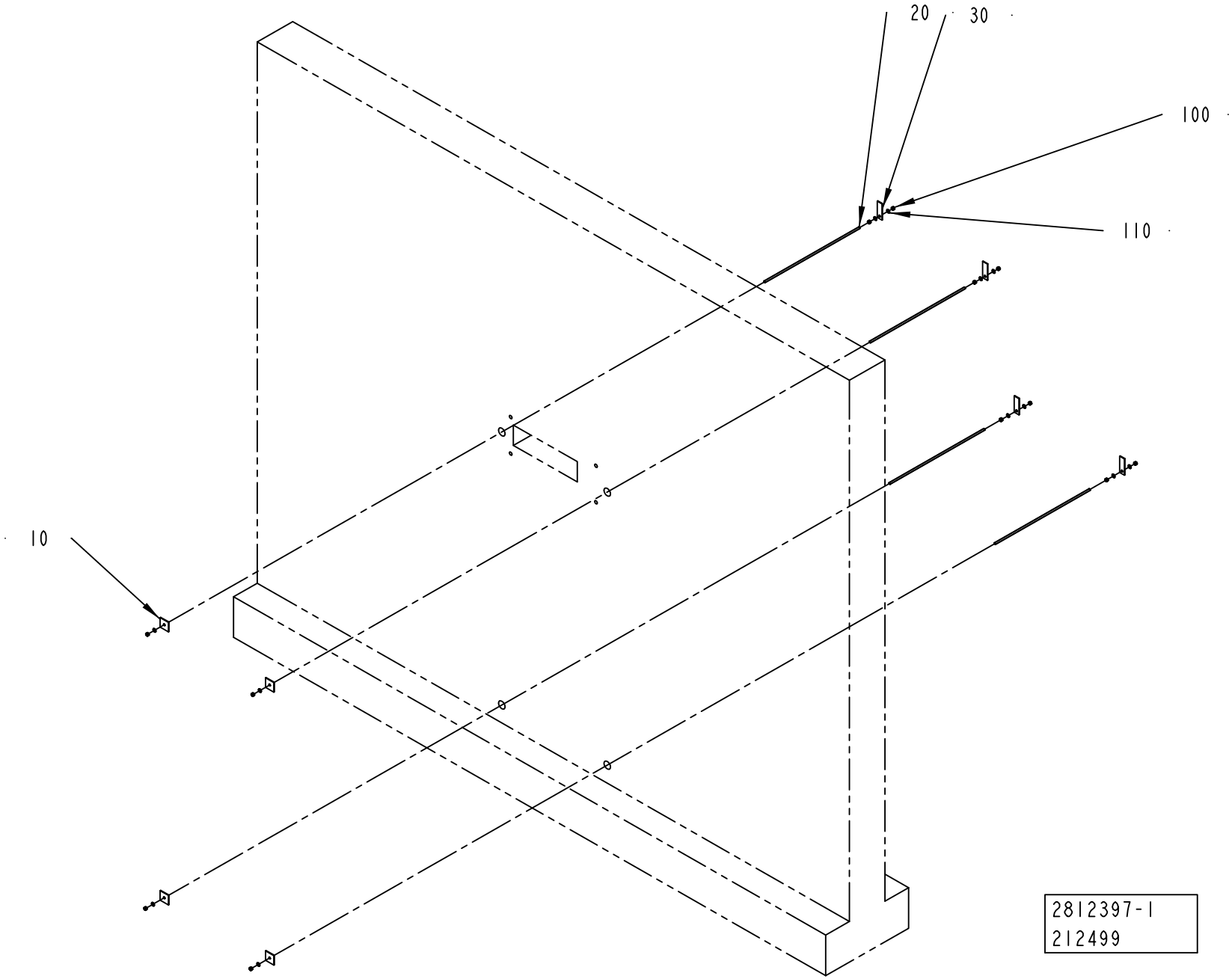
20
30
100
110
10
2812397-1
212499

ECM: 342686 - 20080215
Group number: 2812397-0100
Assembly Drawing: 2812397-1_1_AA

Pos	Part No	UN	Qty	Description	Page No
-					
010	2812398-0000		4	PLATE	
020	2812399-0000		4	MOUNTING BAR	
030	2812400-0000		4	PLATE	
100	312605-0322		12	HEXAGON NUT, M6M M12 A280	
110	315105-0178		12	WASHER BRB 13X24 RFR	

Pos	Part No	UN	Qty	Description	Page No

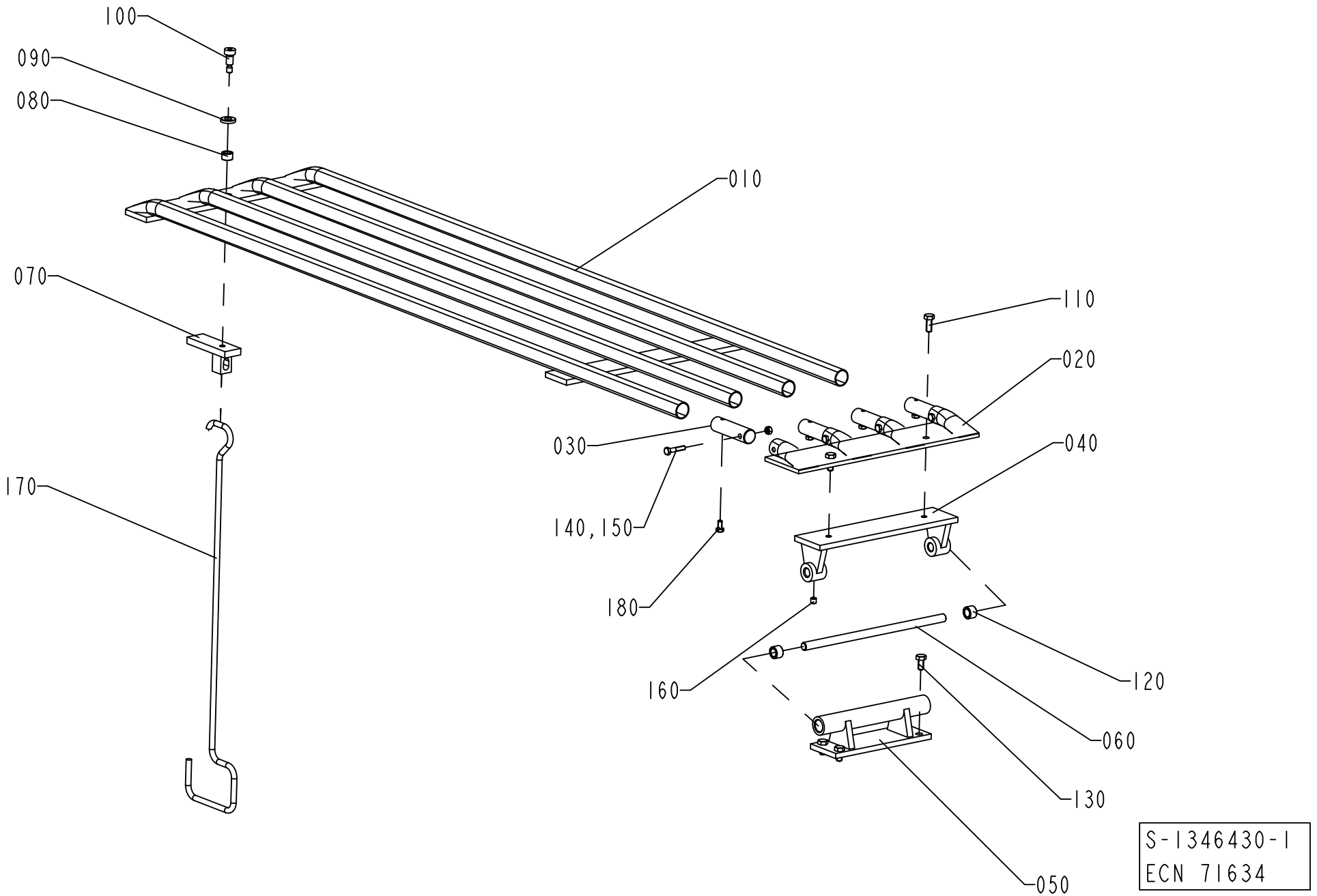
100
090
080
010
070
110
020
030
040
170
140,150
180
160
120
060
130
050
S-1346430-1
ECN 71634

ECM: 310513 - 20070620
Group number: 1346430-0100
Assembly Drawing: 1346430-1_1_AA

This list covers pages from 8-86 to 8-89

Pos	Part No	UN	Qty	Description	Page No
DIMC/FLEX (See drawing on page: 8-88)					
010	2905400-0000		1	SUPPORT	
NO DIMC NO PT, NO DIMC PT/FLEX (See drawing on page: 8-86)					
010	1346408-0000		1	SUPPORT	
Common Parts					
020	530775-0000		1	END PIECE	
030	1346409-0000		4	SHAFT	
040	1346404-0000		1	BRACKET	
050	1346403-0000		1	BRACKET	
060	236634-0000		1	SHAFT	
070	1346395-0000		1	LOCKING ARM	
080	321105-0163		1	BEARING BUSH W/O FLANGE, 10X16X10 MM	
090	315111-0173		1	WASHER PLAIN, TBRB 10,5/22 H=4	
100	312180-0489		1	SCREW ISO7379 H10X16	
110	312105-0449		2	SCREW M6S ISO 4017 M8X16 A480	
120	321105-0173		2	BEARING BUSH W/O FLANGE, 12X18X12 MM	
130	312105-0449		4	SCREW M6S ISO 4017 M8X16 A480	
140	312605-0316		4	HEXAGON NUT, M6M M6 A280	
150	312105-0374		4	SCREW M6S ISO 4014 M6X30 A480	
160	312318-0443		1	SCREW ISO4029 M8X8 A4	
170	236631-0000		1	HANDLE	
180	312105-0366		4	SCREW M6S ISO 4017 M6X12 A480	

Pos	Part No	UN	Qty	Description	Page No

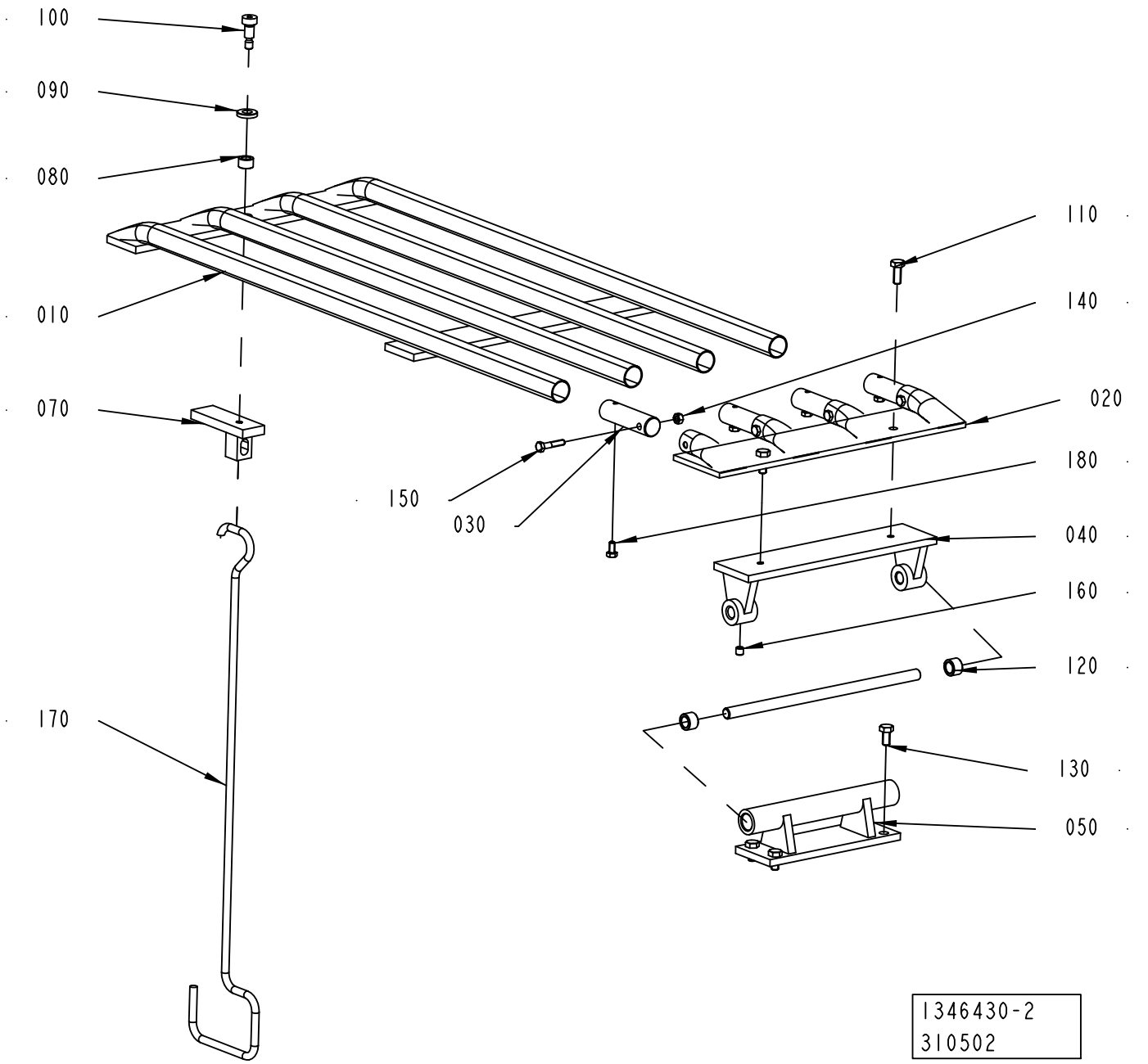
100
090
080
010
070
170
150
030
110
140
020
180
040
160
120
130
050
1346430-2
310502

ECM: 310513 - 20070620
Group number: 1346430-0100
Assembly Drawing: 1346430-2_1_AA

This list covers pages from 8-86 to 8-89

Pos	Part No	UN	Qty	Description	Page No
DIMC/FLEX (See drawing on page: 8-88)					
010	2905400-0000		1	SUPPORT	
NO DIMC NO PT, NO DIMC PT/FLEX (See drawing on page: 8-86)					
010	1346408-0000		1	SUPPORT	
Common Parts					
020	530775-0000		1	END PIECE	
030	1346409-0000		4	SHAFT	
040	1346404-0000		1	BRACKET	
050	1346403-0000		1	BRACKET	
060	236634-0000		1	SHAFT	
070	1346395-0000		1	LOCKING ARM	
080	321105-0163		1	BEARING BUSH W/O FLANGE, 10X16X10 MM	
090	315111-0173		1	WASHER PLAIN, TBRB 10,5/22 H=4	
100	312180-0489		1	SCREW ISO7379 H10X16	
110	312105-0449		2	SCREW M6S ISO 4017 M8X16 A480	
120	321105-0173		2	BEARING BUSH W/O FLANGE, 12X18X12 MM	
130	312105-0449		4	SCREW M6S ISO 4017 M8X16 A480	
140	312605-0316		4	HEXAGON NUT, M6M M6 A280	
150	312105-0374		4	SCREW M6S ISO 4014 M6X30 A480	
160	312318-0443		1	SCREW ISO4029 M8X8 A4	
170	236631-0000		1	HANDLE	
180	312105-0366		4	SCREW M6S ISO 4017 M6X12 A480	

Pos	Part No	UN	Qty	Description	Page No

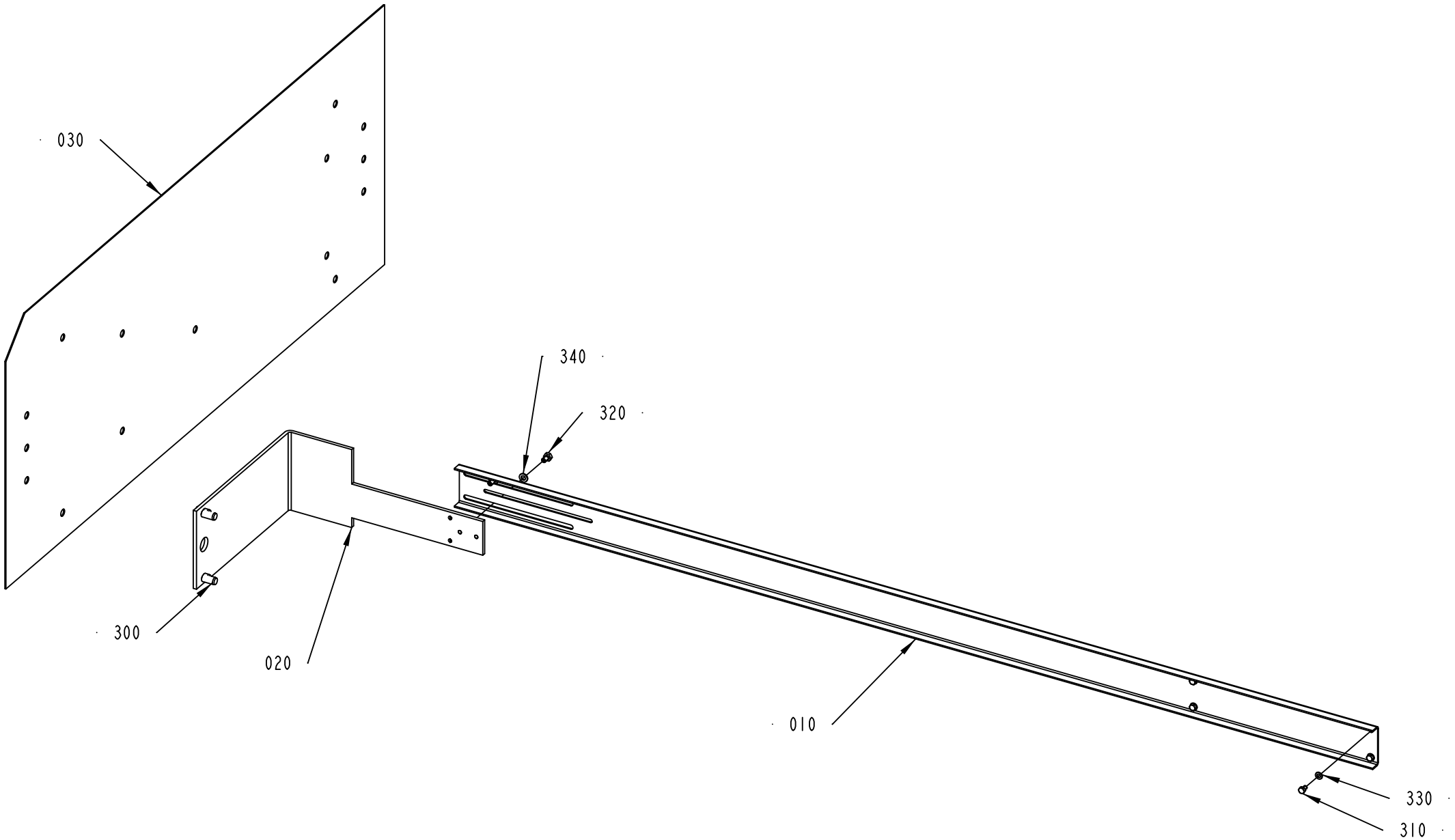
030
340
320
300
020
010
330
310

ECM: 342684 - 20080215
Group number: 2764295-0100
Assembly Drawing: 2764295-1_1_AA

This list covers pages from 8-90 to 8-93

Pos	Part No	UN	Qty	Description	Page No
DIMC/FLEX (See drawing on page: 8-92)					
010	2905407-0000		1	TEMPLATE	
NO DIMC NO PT, NO DIMC PT/FLEX (See drawing on page: 8-90)					
010	2764294-0000		1	TEMPLATE	
Common Parts					
020	2764293-0000		1	TEMPLATE	
030	2750808-0000		1	TEMPLATE	
300	311103-0454		2	PARALLEL PIN ISO 2338 10M6X20 A1	
310	312105-0323		4	SCREW M6S ISO 4017 M5X8 A480	
320	312105-0364		2	SCREW M6S ISO 4017 M6X10 A480	
330	315105-0146		4	WASHER BRB 5,3X10 RFR	
340	315105-0153		2	WASHER BRB 6,4X12 RFR	

Pos	Part No	UN	Qty	Description	Page No

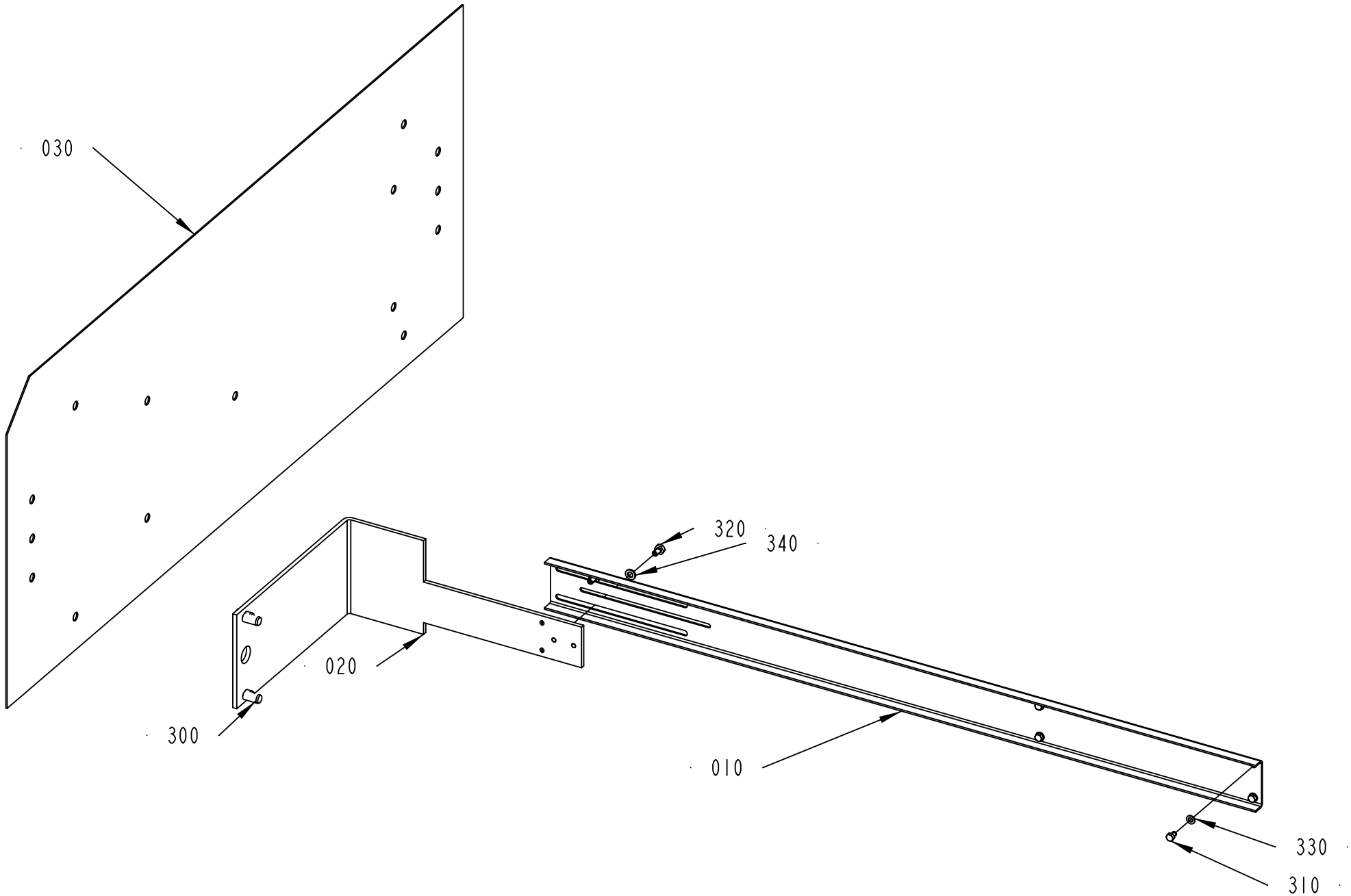
030
320
340
020
300
010
330
310

ECM: 342684 - 20080215
Group number: 2764295-0100
Assembly Drawing: 2764295-2_1_AA

This list covers pages from 8-90 to 8-93

Pos	Part No	UN	Qty	Description	Page No
DIMC/FLEX (See drawing on page: 8-92)					
010	2905407-0000		1	TEMPLATE	
NO DIMC NO PT, NO DIMC PT/FLEX (See drawing on page: 8-90)					
010	2764294-0000		1	TEMPLATE	
Common Parts					
020	2764293-0000		1	TEMPLATE	
030	2750808-0000		1	TEMPLATE	
300	311103-0454		2	PARALLEL PIN ISO 2338 10M6X20 A1	
310	312105-0323		4	SCREW M6S ISO 4017 M5X8 A480	
320	312105-0364		2	SCREW M6S ISO 4017 M6X10 A480	
330	315105-0146		4	WASHER BRB 5,3X10 RFR	
340	315105-0153		2	WASHER BRB 6,4X12 RFR	

Pos	Part No	UN	Qty	Description	Page No

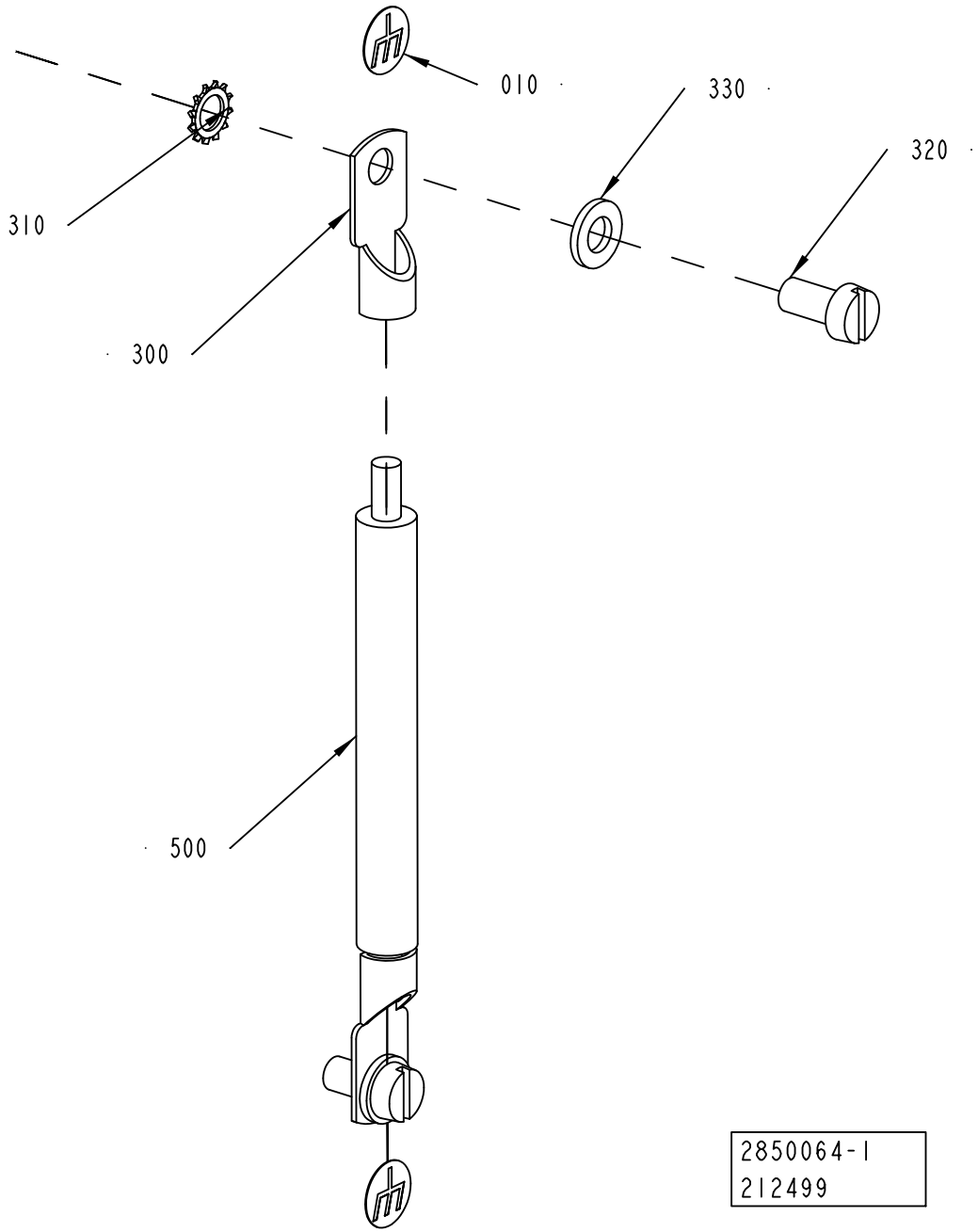
010
330
320
310
300
500
2850064-1
212499

ECM: 273797 - 20061102
Group number: 2850064-0100
Assembly Drawing: 2850064-1_1_AA

Pos	Part No	UN	Qty	Description	Page No
-					
010	2608177-0000		2	SIGN	
300	353104-0175		2	CABLE SHOE, RING UNINS., YAV 25 M 6	
310	90062-0022		2	LOCK WASHER D=6,4/11	
320	312125-0366		2	SCREW ISO 1207 M6X12 A4	
330	315105-0153		2	WASHER BRB 6,4X12 RFR	
500	351162-0110	MM	5000	WIRE AWM 1X25 MM2 YELLOW-GREEN	

Pos	Part No	UN	Qty	Description	Page No

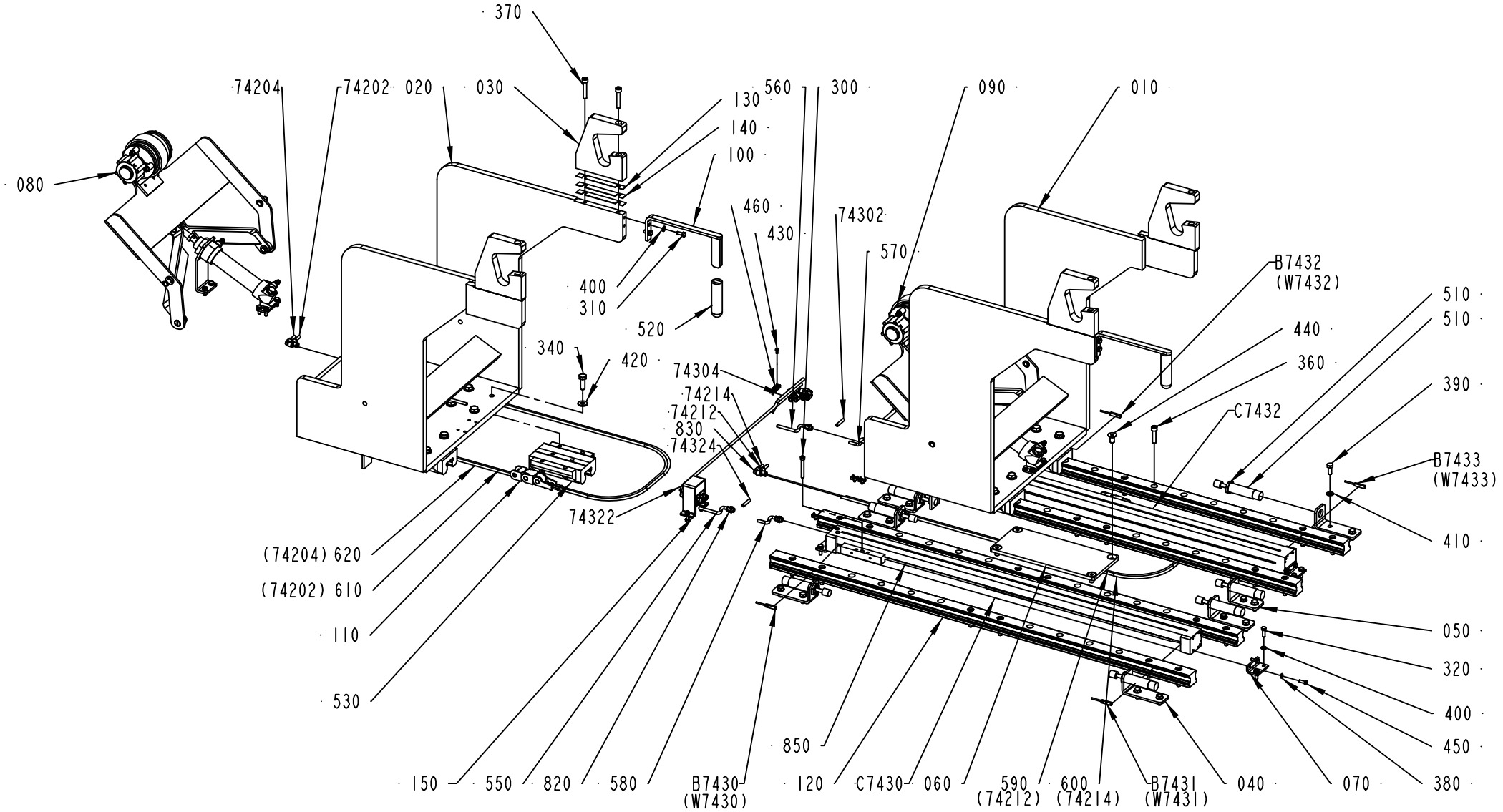

2538072-1
998017

ECM: 998017 - 20070701
Group number: 2538072-0100
Assembly Drawing: 2538072-1_1_AD

Pos	Part No	UN	Qty	Description	Page No
-					
010	2556496-0000		1	CARRIAGE	
020	2556497-0000		1	CARRIAGE	
030	2660776-0000		4	BEARING BLOCK	
040	2556499-0000		7	BRACKET	
050	2623883-0000		1	BRACKET	
060	2623884-0000		1	PLATE	
070	2556512-0000		4	BRACKET	
080	2629315-0100		1	PAPER BRAKE	**8-99**
090	2556503-0100		1	PAPER BRAKE	**8-101**
100	2564623-0000		2	HANDLE	
110	2564630-0100		2	CABLE DRAG CHAIN	**8-103**
120	2629338-0000		4	GUIDE RAIL	
130	2731880-0001		4	SHIM	
140	2731880-0002		8	SHIM	
150	2711993-0100		2	AIR SUPPLY	**8-105**
300	312115-0380		2	SCREW ISO4762 M6X50 A4 80	
310	312105-0368		4	SCREW M6S ISO 4017 M6X16 A480	
320	312105-0370		8	SCREW M6S ISO 4017 M6X20 A480	
340	312105-0495		32	SCREW M6S ISO 4017 M10X30 A480	
360	312115-0457		24	SCREW ISO4762 M8X35 A4 80	
370	312115-0460		8	SCREW ISO4762 M8X45 A4 80	
380	315105-0146		8	WASHER BRB 5,3X10 RFR	
390	312105-0451		16	SCREW M6S ISO 4017 M8X20 A480	
400	315105-0153		12	WASHER BRB 6,4X12 RFR	
410	315105-0165		16	WASHER BRB 8,4X16 RFR	
420	315105-0173		32	WASHER BRB 10,5X22 RFR	
430	312125-0287		11	SCREW ISO 1207 M4X8 A4	
440	312155-0491		4	SCREW DIN 7991 MF6S M10X20 A4 70	
450	312105-0329		8	SCREW M6S ISO 4017 M5X16 A480	
460	352113-0205		11	ANCHOR PLATES FOR STRIPS, TYPE TM2S8-C10	
510	90347-0182		8	SHOCK ABSORBER, YSR-16-20-C	
520	90459-1544		2	HANDLE, GR/10	
530	90459-1545		8	CARRIAGE, R2001-314-04	
550	90166-0193	MM	500	TUBE 6 MM PUR BLUE	
560	90166-0193	MM	500	TUBE 6 MM PUR BLUE	
570	90166-0193	MM	500	TUBE 6 MM PUR BLUE	
580	90166-0193	MM	500	TUBE 6 MM PUR BLUE	
590	90166-0193	MM	1800	TUBE 6 MM PUR BLUE	
600	90166-0193	MM	1800	TUBE 6 MM PUR BLUE	
610	90166-0193	MM	1800	TUBE 6 MM PUR BLUE	
620	90166-0193	MM	1800	TUBE 6 MM PUR BLUE	
74202	90166-0193	MM	4000	TUBE 6 MM PUR BLUE	
74204	90166-0193	MM	4000	TUBE 6 MM PUR BLUE	
74212	90166-0193	MM	4000	TUBE 6 MM PUR BLUE	
74214	90166-0193	MM	4000	TUBE 6 MM PUR BLUE	
74302	90166-0193	MM	4000	TUBE 6 MM PUR BLUE	
74304	90166-0193	MM	4000	TUBE 6 MM PUR BLUE	
74322	90166-0193	MM	4000	TUBE 6 MM PUR BLUE	
74324	90166-0193	MM	4000	TUBE 6 MM PUR BLUE	
810	90235-0846		4	THROTTLE CHECK VALVE G1/8", MANUAL, 6	
820	342722-0202		4	PIPE COUPLING 1/8" D=6MM	
830	342735-0102		12	ELBOW PIPE JOINT	
840	342770-0105		4	STRAIGHT COUPLING INT, D=6 MM - G1/8	
850	90458-0273		4	SLOT COVER ABP-5-S, 151680	
B7430	90044-0165		1	PROX.SWITCH SME-8-K5-LED-24	
B7431	90044-0165		1	PROX.SWITCH SME-8-K5-LED-24	
B7432	90044-0165		1	PROX.SWITCH SME-8-K5-LED-24	
B7433	90044-0165		1	PROX.SWITCH SME-8-K5-LED-24	
C7430	90459-2647		1	DOUBLE ACTING, SHUTTLE, CYL. 25-780	
C7432	90459-2647		1	DOUBLE ACTING, SHUTTLE, CYL. 25-780	

Machine Type | Group Description | Used-In | Group Number | Page No

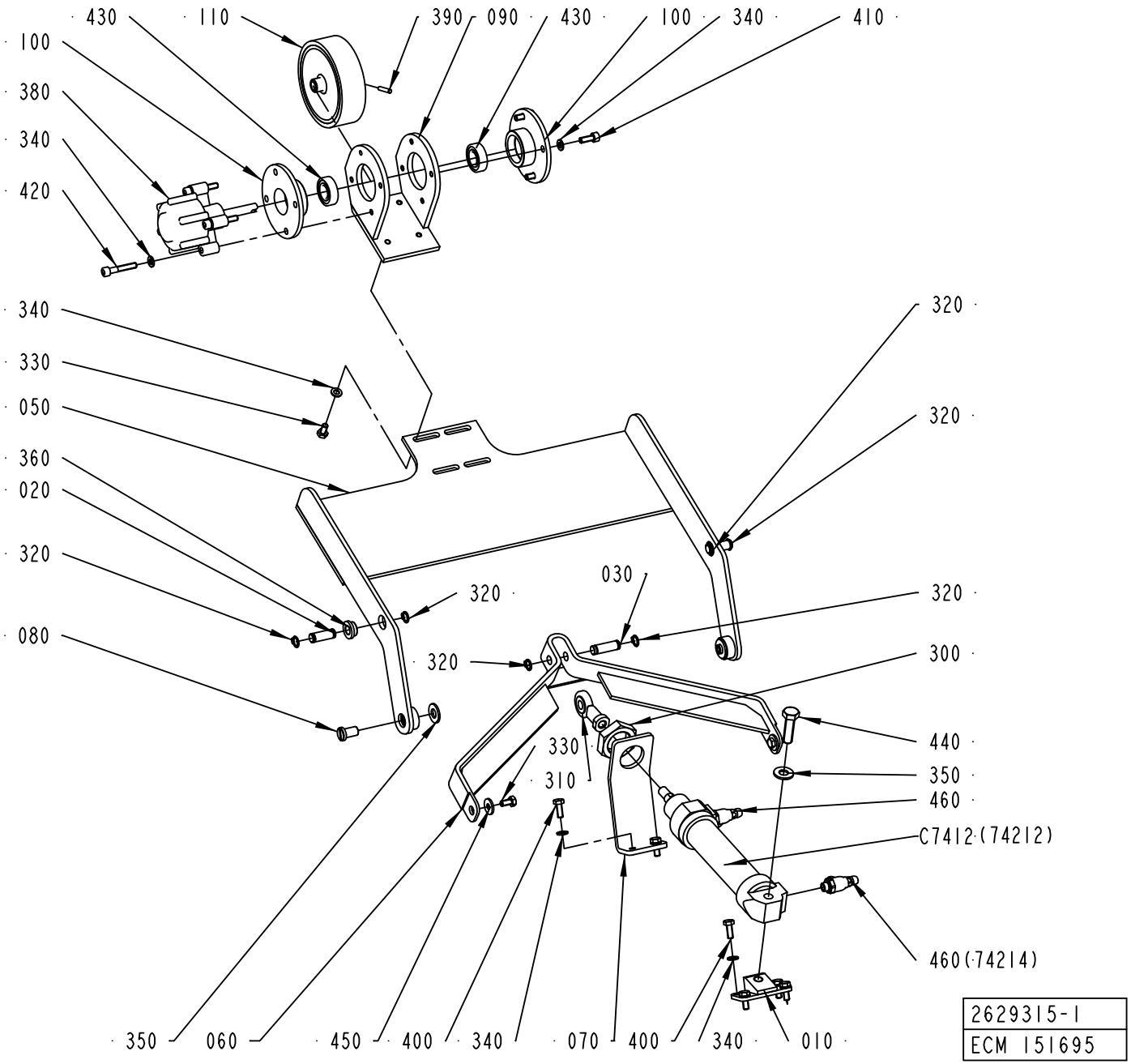
430
110
390
090
430
100
340
410
100
380
340
420
340
330
050
360
020
320
080
320
320
320
320
030
320
300
440
350
460
C7412 (74212)
460 (74214)
330
310
350
060
450
400
340
070
400
340
010
2629315-1
ECM 151695

ECM: 177928 - 20041005
Group number: 2629315-0100
Assembly Drawing: 2629315-1_1_AA

Pos	Part No	UN	Qty	Description	Page No
-					
010	2556504-0000		1	BRACKET	
020	2556505-0002		2	PIN	
030	2556505-0003		1	PIN	
050	2556507-0000		1	LEVER	
060	2556506-0000		1	LINK	
070	2556508-0000		1	BRACKET	
080	2556509-0000		2	SHAFT	
090	2556510-0000		1	BRACKET	
100	1512363-0000		2	BEARING HOUSING	
110	1523483-0000		1	ROLLER	
310	90239-0405		1	ROD END,BALL JOINT EYE M10X1,25	
320	90141-0016		6	RETAINING RING FOR SHAFT DIN 471 10 SS	
330	312105-0366		6	SCREW M6S ISO 4017 M6X12 A480	
340	315105-0153		18	WASHER BRB 6,4X12 RFR	
350	315105-0173		3	WASHER BRB 10,5X22 RFR	
360	321101-0162		2	FLANGE BUSHING, 10X16X8 MM	
380	90347-0054		1	ROTARY DASHPOT, S-CRD-P277	
390	311103-1274		1	PARALLEL PIN ISO 2338 4M6X24 A1	
400	312105-0368		6	SCREW M6S ISO 4017 M6X16 A480	
410	312115-0368		4	SCREW ISO4762 M6X16 A4 80	
420	312115-0376		4	SCREW ISO4762 M6X35 A4 80	
430	321308-0202		2	BALL BEARING, 15X32X9 MM	
440	312105-0497		1	SCREW M6S ISO 4017 M10X35 A480	
450	6278-0000		2	WASHER	
460	90235-0846		2	THROTTLE CHECK VALVE G1/8", MANUAL, 6	
C7412	90239-0861		1	DOUBLE ACTING, MINI-ISO, CYL. 32-125	

Pos	Part No	UN	Qty	Description	Page No

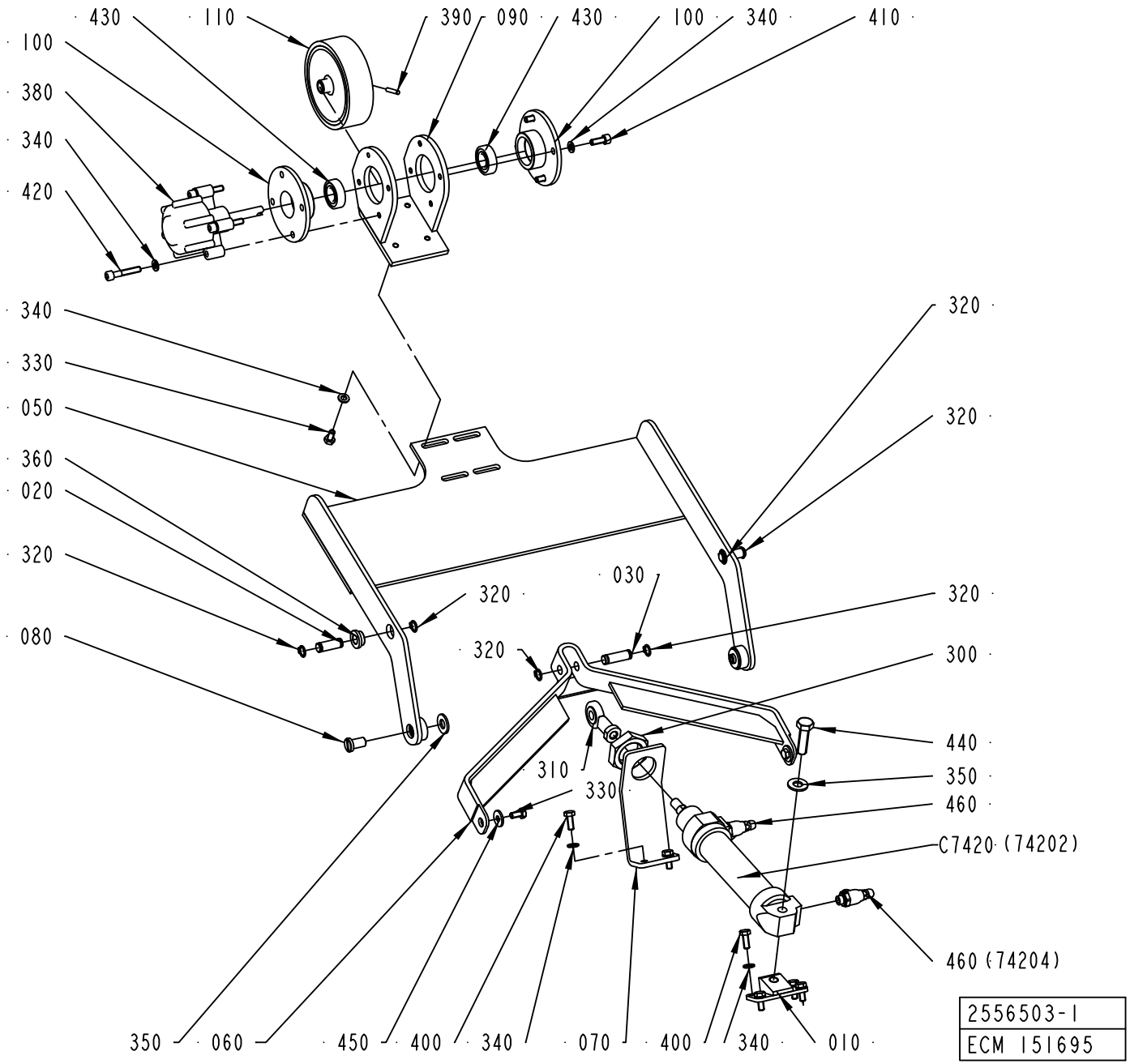
430
110
390
090
430
100
340
410
100
380
340
420
340
330
050
360
020
320
080
320
320
320
320
320
030
320
300
440
350
460
C7420 (74202)
460 (74204)
310
330
350
060
450
400
340
070
400
340
010
2556503-1
ECM 151695

ECM: 177929 - 20041005
Group number: 2556503-0100
Assembly Drawing: 2556503-1_1_AA

Pos	Part No	UN	Qty	Description	Page No
-					
010	2556504-0000		1	BRACKET	
020	2556505-0002		2	PIN	
030	2556505-0003		1	PIN	
050	2556507-0000		1	LEVER	
060	2556506-0000		1	LINK	
070	2556508-0000		1	BRACKET	
080	2556509-0000		2	SHAFT	
090	2556510-0000		1	BRACKET	
100	1512363-0000		2	BEARING HOUSING	
110	1523483-0000		1	ROLLER	
310	90239-0405		1	ROD END,BALL JOINT EYE M10X1,25	
320	90141-0016		6	RETAINING RING FOR SHAFT DIN 471 10 SS	
330	312105-0366		6	SCREW M6S ISO 4017 M6X12 A480	
340	315105-0153		18	WASHER BRB 6,4X12 RFR	
350	315105-0173		3	WASHER BRB 10,5X22 RFR	
360	321101-0162		2	FLANGE BUSHING, 10X16X8 MM	
380	90347-0054		1	ROTARY DASHPOT, S-CRD-P277	
390	311103-1274		4	PARALLEL PIN ISO 2338 4M6X24 A1	
400	312105-0368		6	SCREW M6S ISO 4017 M6X16 A480	
410	312115-0368		4	SCREW ISO4762 M6X16 A4 80	
420	312115-0376		4	SCREW ISO4762 M6X35 A4 80	
430	321308-0202		2	BALL BEARING, 15X32X9 MM	
440	312105-0497		1	SCREW M6S ISO 4017 M10X35 A480	
450	6278-0000		2	WASHER	
460	90235-0846		2	THROTTLE CHECK VALVE G1/8", MANUAL, 6	
C7420	90239-0861		1	DOUBLE ACTING, MINI-ISO, CYL. 32-125	

Pos	Part No	UN	Qty	Description	Page No

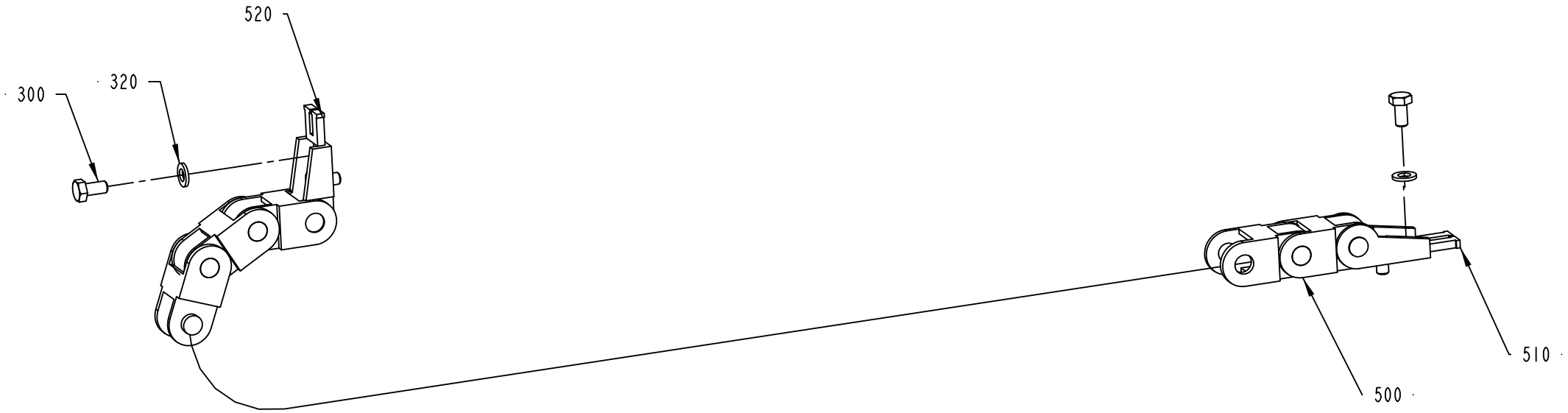

2564630-1
ECM 998017

ECM: 998017 - 20070701
Group number: 2564630-0100
Assembly Drawing: 2564630-1_1_AB

Pos	Part No	UN	Qty	Description	Page No
-					
300	312105-0366		4	SCREW M6S ISO 4017 M6X12 A480	
310	312115-0378		2	SCREW ISO4762 M6X40 A4 80	
320	315105-0153		4	WASHER BRB 6,4X12 RFR	
500	90181-0199		1	FLEXIBLE CHAIN, LINK 15	
510	90181-0202		1	FLEXIBLE CHAIN, BRACKET 1015. 1PZ	
520	90181-0203		1	FLEXIBLE CHAIN, BRACKET 1015. 2PZ	

Pos	Part No	UN	Qty	Description	Page No

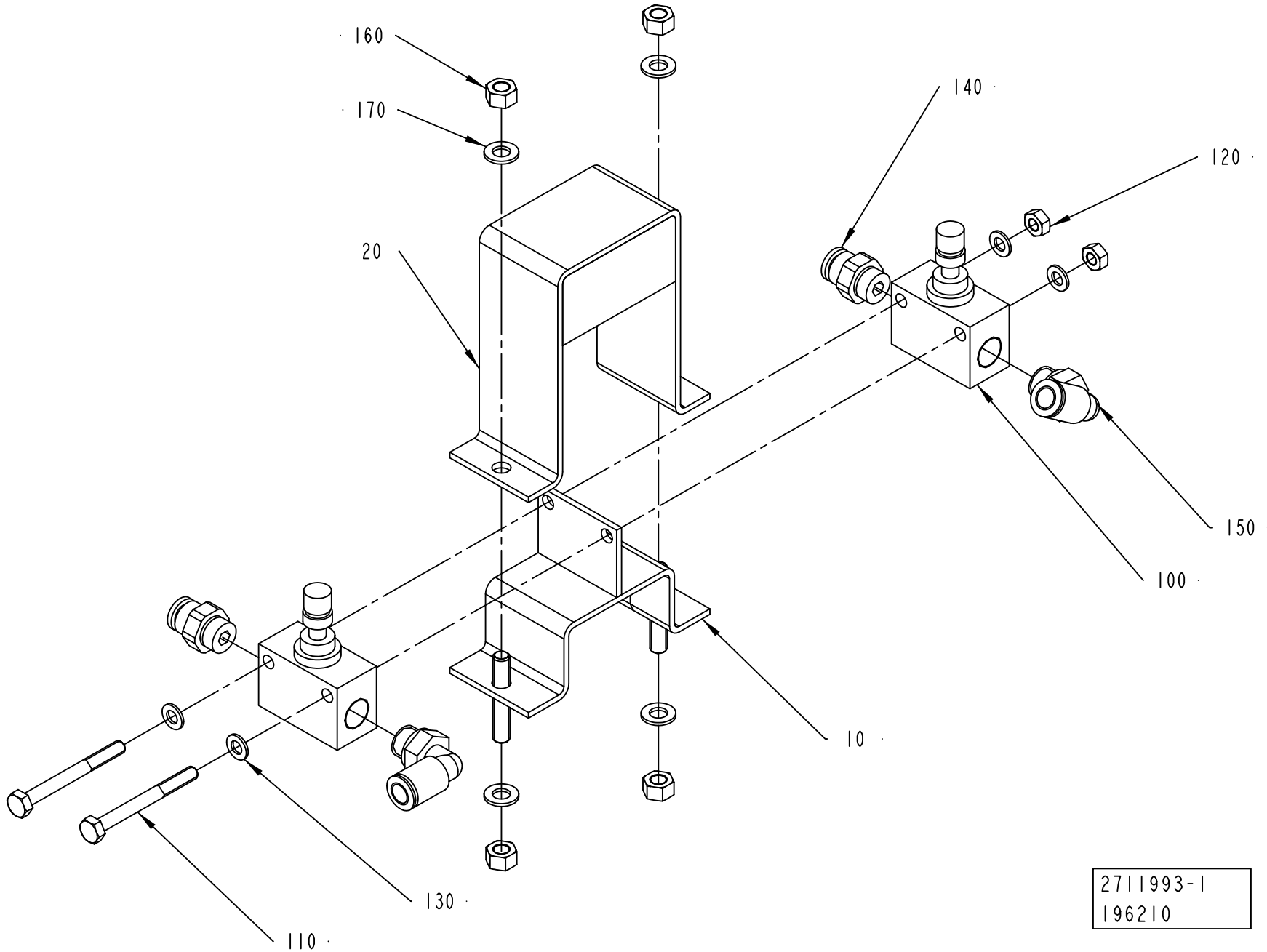
160
170
20
140
120
150
100
10
130
110
2711993-1
196210

ECM: 196221 - 20051128
Group number: 2711993-0100
Assembly Drawing: 2711993-1_1_AA

Pos	Part No	UN	Qty	Description	Page No
-					
010	2711991-0000		1	SUPPORT	
020	2711992-0000		1	COVER	
100	90235-0250		2	THROTTLE CHECK VALVE, GR-1/8-B FESTO	
	90235-0401		*1*	*COVER CAP, GRK-1/8*	
110	312105-0303		2	SCREW M6S ISO 4017 M4X40 A470	
120	312607-0312		2	HEXAGON NUT, EN 24032 M6M M4 A480	
130	315105-0136		4	WASHER BRB 4,3X8 RFR	
140	342722-0202		2	PIPE COUPLING 1/8" D=6MM	
150	350002-0006		2	PUSH-IN L-FITTING QSL-F-G1/8-6	
160	312607-0314		4	HEXAGON NUT, EN 24032 M6M M5 A480	
170	315105-0146		4	WASHER BRB 5,3X10 RFR	

Pos	Part No	UN	Qty	Description	Page No

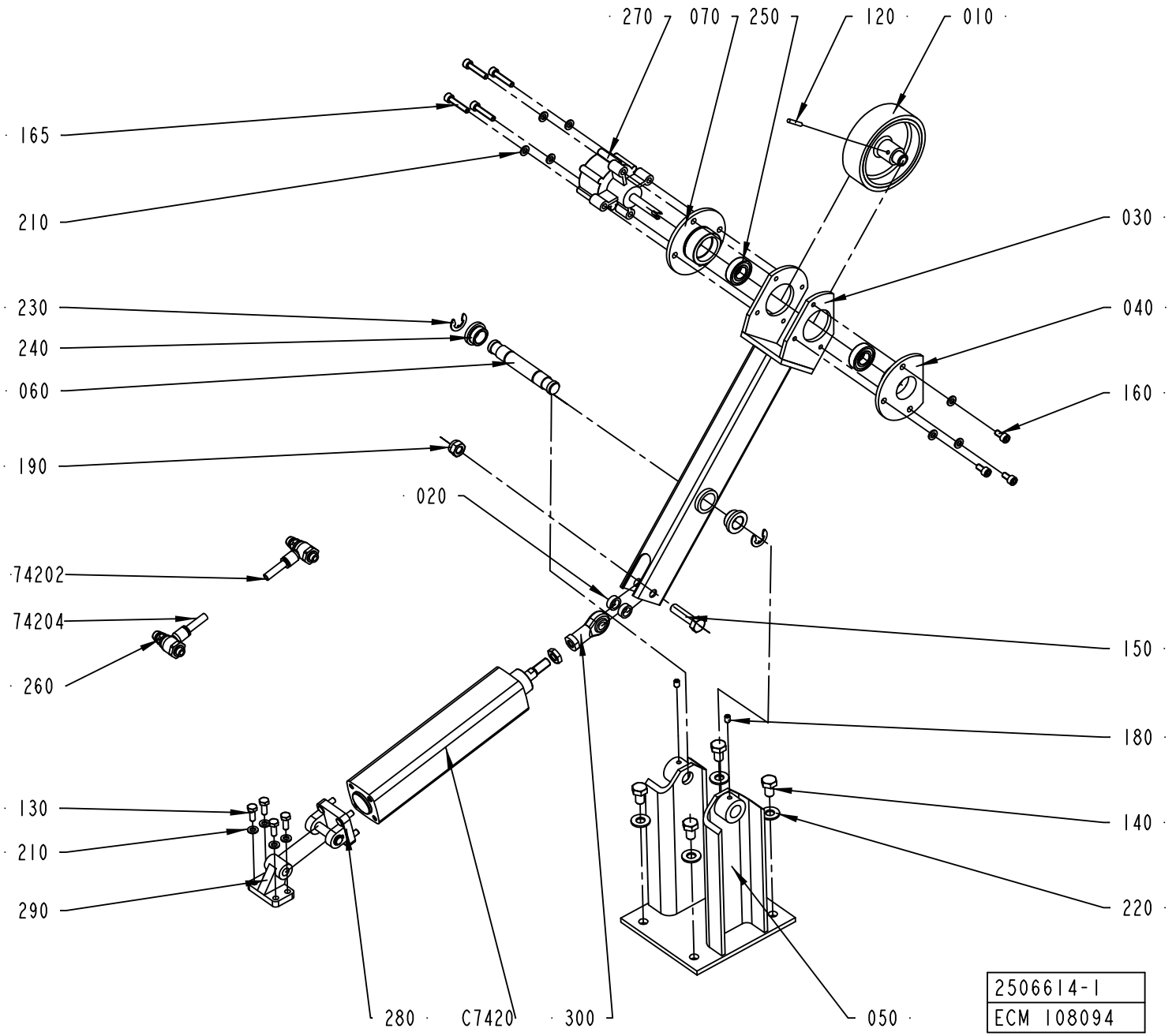
270
070
250
120
010
165
210
030
230
240
060
040
160
190
020
74202
74204
260
150
180
130
210
290
140
220
280
C7420
300
050
2506614-1
ECM 108094

ECM: 272280 - 20060712
Group number: 2506614-0100
Assembly Drawing: 2506614-1_1_AB

Pos	Part No	UN	Qty	Description	Page No
-					
010	1523483-0000		1	ROLLER	
020	1523486-0000		2	SPACER	
030	2506647-0000		1	LEVER	
040	2506649-0000		1	BEARING FLANGE	
050	2506650-0000		1	FRAME	
060	2506652-0000		1	AXLE PIN	
070	2507103-0000		1	BEARING FLANGE	
120	311103-1274		1	PARALLEL PIN ISO 2338 4M6X24 A1	
130	312105-0370		4	SCREW M6S ISO 4017 M6X20 A480	
140	312105-0491		4	SCREW M6S ISO 4017 M10X20 A480	
150	312105-0499		1	SCREW M6S ISO 4014 M10X40 A480	
160	312115-0366		3	SCREW ISO4762 M6X12 A4 80	
165	312115-0374		4	SCREW ISO4762 M6X30 A4 80	
180	312318-0362		2	SCREW ISO4029 M6X8 A4	
190	312812-0320		1	HEXAGON NUT, NY-LOCK M10 A480	
210	315105-0153		11	WASHER BRB 6,4X12 RFR	
220	315105-0173		4	WASHER BRB 10,5X22 RFR	
230	315755-0112		2	RETAINING RING SHAFT DIN 6799 12 A2	
240	321101-0202		2	FLANGE BUSHING, 16X22X12 MM	
250	321308-0202		2	BALL BEARING, 15X32X9 MM	
260	90235-0848		2	THROTTLE CHECK VALVE, G1/8", MANUAL,8	
270	90347-0054		1	ROTARY DASHPOT, S-CRD-P277	
280	90450-0654		1	BRACKET,REAR,EYE WITH AXLE 32	
290	90450-0655		1	BRACKET,REAR,CLEVIS FLANGE WITH FOOT 32	
300	90450-0723		1	ROD END,BALL JOINT EYE M10X1,25	
74202	90166-0194	MM	7000	TUBE 8 MM PUR BLUE	
74204	90166-0194	MM	7000	TUBE 8 MM PUR BLUE	
C7420	90459-3370		1	DOUBLE ACTING, PROFILE,CYL 32-140	

Pos	Part No	UN	Qty	Description	Page No

BOBBIN BRAKE

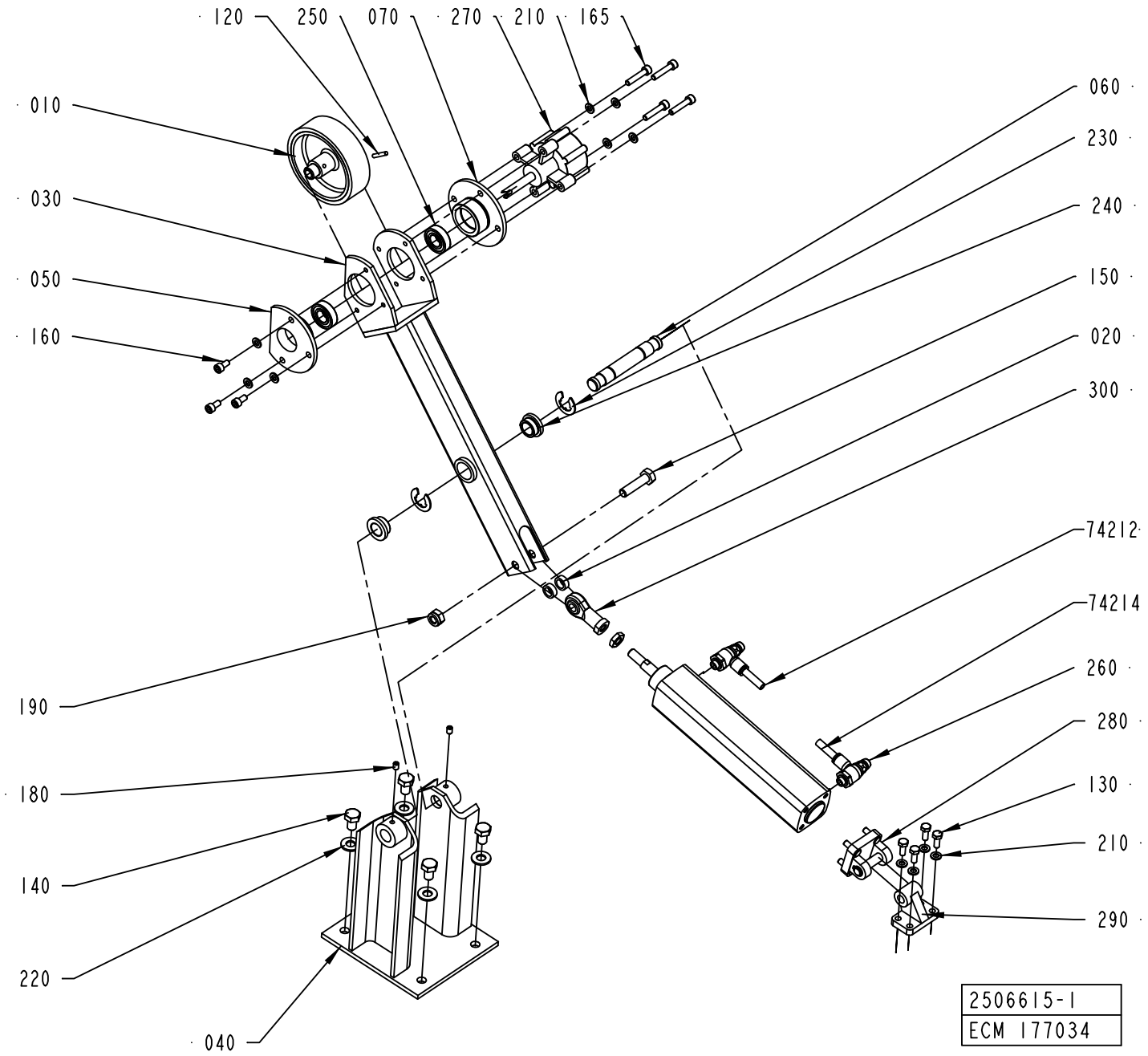

ECM: 272281 - 20060712
Group number: 2506615-0100
Assembly Drawing: 2506615-1_1_AC

Pos	Part No	UN	Qty	Description	Page No
-					
010	1523483-0000		1	ROLLER	
020	1523486-0000		2	SPACER	
030	2506648-0000		1	LEVER	
040	2506650-0000		1	FRAME	
050	2506651-0000		1	BEARING FLANGE	
060	2506652-0000		1	AXLE PIN	
070	2507103-0000		1	BEARING FLANGE	
120	311103-1274		1	PARALLEL PIN ISO 2338 4M6X24 A1	
130	312105-0370		4	SCREW M6S ISO 4017 M6X20 A480	
140	312105-0491		4	SCREW M6S ISO 4017 M10X20 A480	
150	312105-0499		1	SCREW M6S ISO 4014 M10X40 A480	
160	312115-0366		3	SCREW ISO4762 M6X12 A4 80	
165	312115-0374		4	SCREW ISO4762 M6X30 A4 80	
180	312318-0362		2	SCREW ISO4029 M6X8 A4	
190	312812-0320		1	HEXAGON NUT, NY-LOCK M10 A480	
210	315105-0153		11	WASHER BRB 6,4X12 RFR	
220	315105-0173		4	WASHER BRB 10,5X22 RFR	
230	315755-0112		2	RETAINING RING SHAFT DIN 6799 12 A2	
240	321101-0202		2	FLANGE BUSHING, 16X22X12 MM	
250	321308-0202		2	BALL BEARING, 15X32X9 MM	
260	90235-0848		2	THROTTLE CHECK VALVE, G1/8", MANUAL,8	
270	90347-0054		1	ROTARY DASHPOT, S-CRD-P277	
280	90450-0654		1	BRACKET,REAR,EYE WITH AXLE 32	
290	90450-0655		1	BRACKET,REAR,CLEVIS FLANGE WITH FOOT 32	
300	90450-0723		1	ROD END,BALL JOINT EYE M10X1,25	
74212	90166-0194	MM	7000	TUBE 8 MM PUR BLUE	
74214	90166-0194	MM	7000	TUBE 8 MM PUR BLUE	
C7421	90459-3370		1	DOUBLE ACTING, PROFILE,CYL 32-140	

Pos	Part No	UN	Qty	Description	Page No

MACHINE BODY

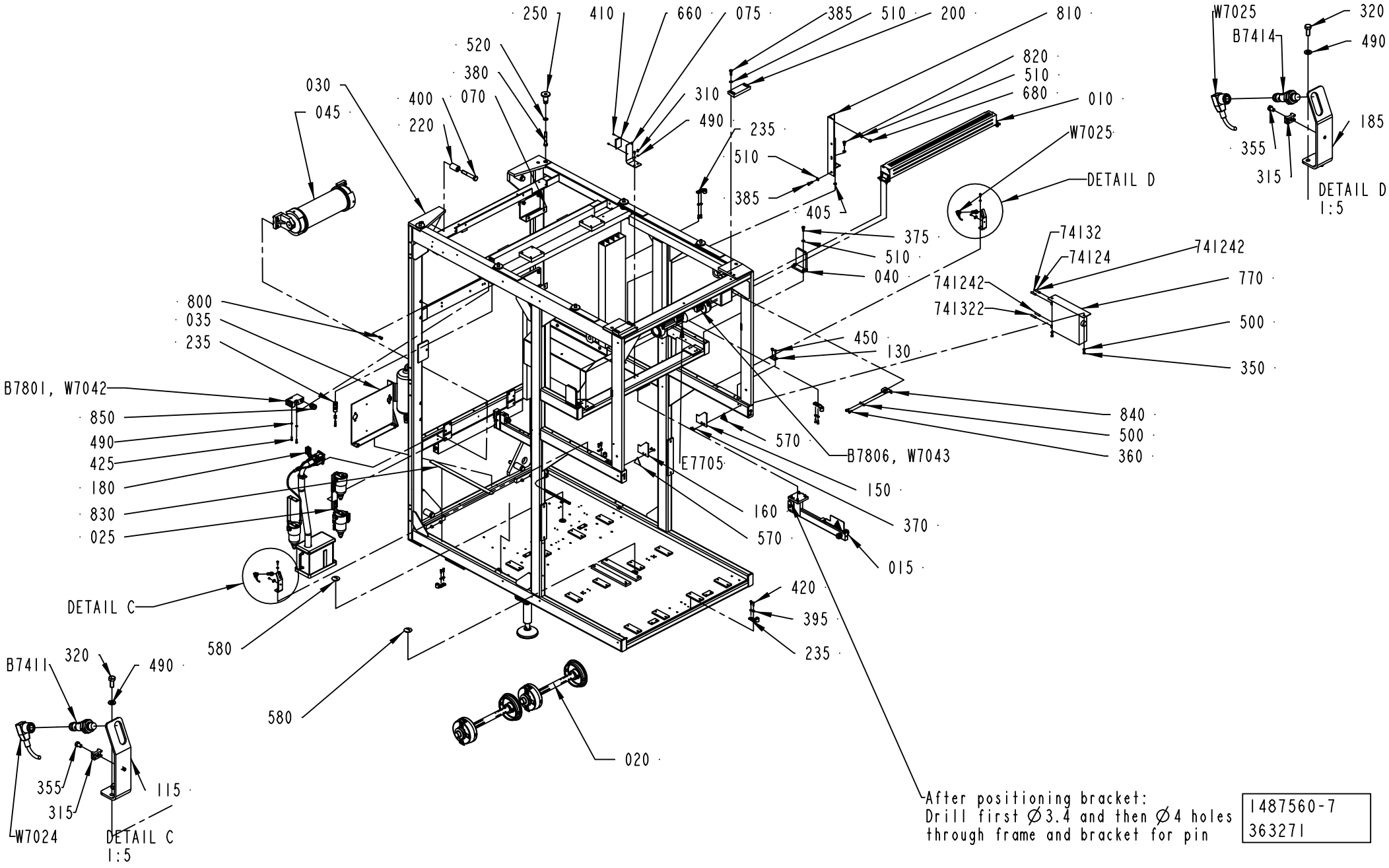

ECM: 369648 - 20081002
Group number: 1487560-0200
Assembly Drawing: 1487560-7_1_AH

This list covers pages from 8-110 to 8-117

Pos	Part No	UN	Qty	Description	Page No
A3/FLEX ASU WITH ARL (See drawing on pages: 8-110, 8-112)					
020	2731217-0100		2	PAPER REEL HOLDER	**8-119, 11-75**
025	2541891-0100		1	FILTER	**8-121**
035	2888477-0100		1	PNEUMATIC ACCUMULATOR	**8-123**
045	2541083-0100		1	BENDING ROLLER	**8-125**
200	985756-0000		2	KEY	
250	2599941-0000		6	SPACER	
360	312105-0368		8	SCREW M6S ISO 4017 M6X16 A480	
380	312105-0548		6	SCREW M6S ISO 4014 M12X80 A480	
385	312105-0453		9	SCREW M6S ISO 4017 M8X25 A480	
500	315105-0153		16	WASHER BRB 6,4X12 RFR	
510	315105-0165		22	WASHER BRB 8,4X16 RFR	
520	315105-0178		6	WASHER BRB 13X24 RFR	
695	312105-0452		2	SCREW M6S ISO 4017 M8X22 A480	
780	90600-0724		2	FOOT 25000N, R0773 611223	
A3/FLEX ASU WITHOUT ARL (See drawing on pages: 8-114, 8-116)					
020	2731217-0100		2	PAPER REEL HOLDER	**8-119, 11-75**
025	2541891-0100		1	FILTER	**8-121**
035	2888477-0100		1	PNEUMATIC ACCUMULATOR	**8-123**
045	2541083-0100		1	BENDING ROLLER	**8-125**
050	2538073-0001		4	SHIMS	
055	2538073-0002		8	SHIMS	
080	2553107-0000		1	HOLDER	
090	2553108-0000		1	HOLDER	
170	2553109-0000		1	HOLDER	
200	985756-0000		2	KEY	
250	2599941-0000		6	SPACER	
360	312105-0368		8	SCREW M6S ISO 4017 M6X16 A480	
380	312105-0548		6	SCREW M6S ISO 4014 M12X80 A480	
385	312105-0453		9	SCREW M6S ISO 4017 M8X25 A480	
460	312155-0493		8	SCREW DIN 7991 MF6S M10X25 A4 70	
500	315105-0153		16	WASHER BRB 6,4X12 RFR	
510	315105-0165		22	WASHER BRB 8,4X16 RFR	
520	315105-0178		6	WASHER BRB 13X24 RFR	
695	312105-0452		2	SCREW M6S ISO 4017 M8X22 A480	
780	90600-0724		2	FOOT 25000N, R0773 611223	
A3/FLEX SEPROOM WITH ARL (See drawing on pages: 8-110, 8-112)					
020	2731217-0100		2	PAPER REEL HOLDER	**8-119, 11-75**
025	2541891-0100		1	FILTER	**8-121**
035	2888477-0100		1	PNEUMATIC ACCUMULATOR	**8-123**
045	2541083-0100		1	BENDING ROLLER	**8-125**
200	985756-0000		2	KEY	
250	2599941-0000		6	SPACER	
360	312105-0368		8	SCREW M6S ISO 4017 M6X16 A480	
380	312105-0548		6	SCREW M6S ISO 4014 M12X80 A480	
385	312105-0453		17	SCREW M6S ISO 4017 M8X25 A480	
500	315105-0153		16	WASHER BRB 6,4X12 RFR	
510	315105-0165		30	WASHER BRB 8,4X16 RFR	
520	315105-0178		6	WASHER BRB 13X24 RFR	
695	312105-0452		2	SCREW M6S ISO 4017 M8X22 A480	
780	90600-0724		4	FOOT 25000N, R0773 611223	
A3/FLEX SEPROOM WITHOUT ARL (See drawing on pages: 8-114, 8-116)					
020	2731217-0100		2	PAPER REEL HOLDER	**8-119, 11-75**
025	2541891-0100		1	FILTER	**8-121**
035	2888477-0100		1	PNEUMATIC ACCUMULATOR	**8-123**
045	2541083-0100		1	BENDING ROLLER	**8-125**
050	2538073-0001		4	SHIMS	
055	2538073-0002		8	SHIMS	
080	2553107-0000		1	HOLDER	
090	2553108-0000		1	HOLDER	
170	2553109-0000		1	HOLDER	
200	985756-0000		2	KEY	
250	2599941-0000		6	SPACER	
360	312105-0368		8	SCREW M6S ISO 4017 M6X16 A480	
380	312105-0548		6	SCREW M6S ISO 4014 M12X80 A480	
385	312105-0453		17	SCREW M6S ISO 4017 M8X25 A480	
460	312155-0493		8	SCREW DIN 7991 MF6S M10X25 A4 70	
500	315105-0153		16	WASHER BRB 6,4X12 RFR	
510	315105-0165		30	WASHER BRB 8,4X16 RFR	
520	315105-0178		6	WASHER BRB 13X24 RFR	
695	312105-0452		2	SCREW M6S ISO 4017 M8X22 A480	
780	90600-0724		4	FOOT 25000N, R0773 611223	
Common Parts					
010	1487544-0200		1	SIDE FEEDER	**8-127**
015	2541890-0100		1	BRACKET	**8-129**
030	1512279-0200		1	MACHINE BODY	**8-131**
040	2552821-0000		2	BRACKET	
070	1558487-0000		2	SUPPORT	
075	1548200-0000		1	BRACKET	
100	1499570-0000		1	HOLDER	
115	2538076-0000		1	BRACKET	
130	1512420-0000		2	PLATE	
140	1517101-0000		1	PIPE	
150	1558484-0000		1	PROTECTION PLATE	

Machine Type | Group Description | Used-In | Group Number | Page No

MACHINE BODY

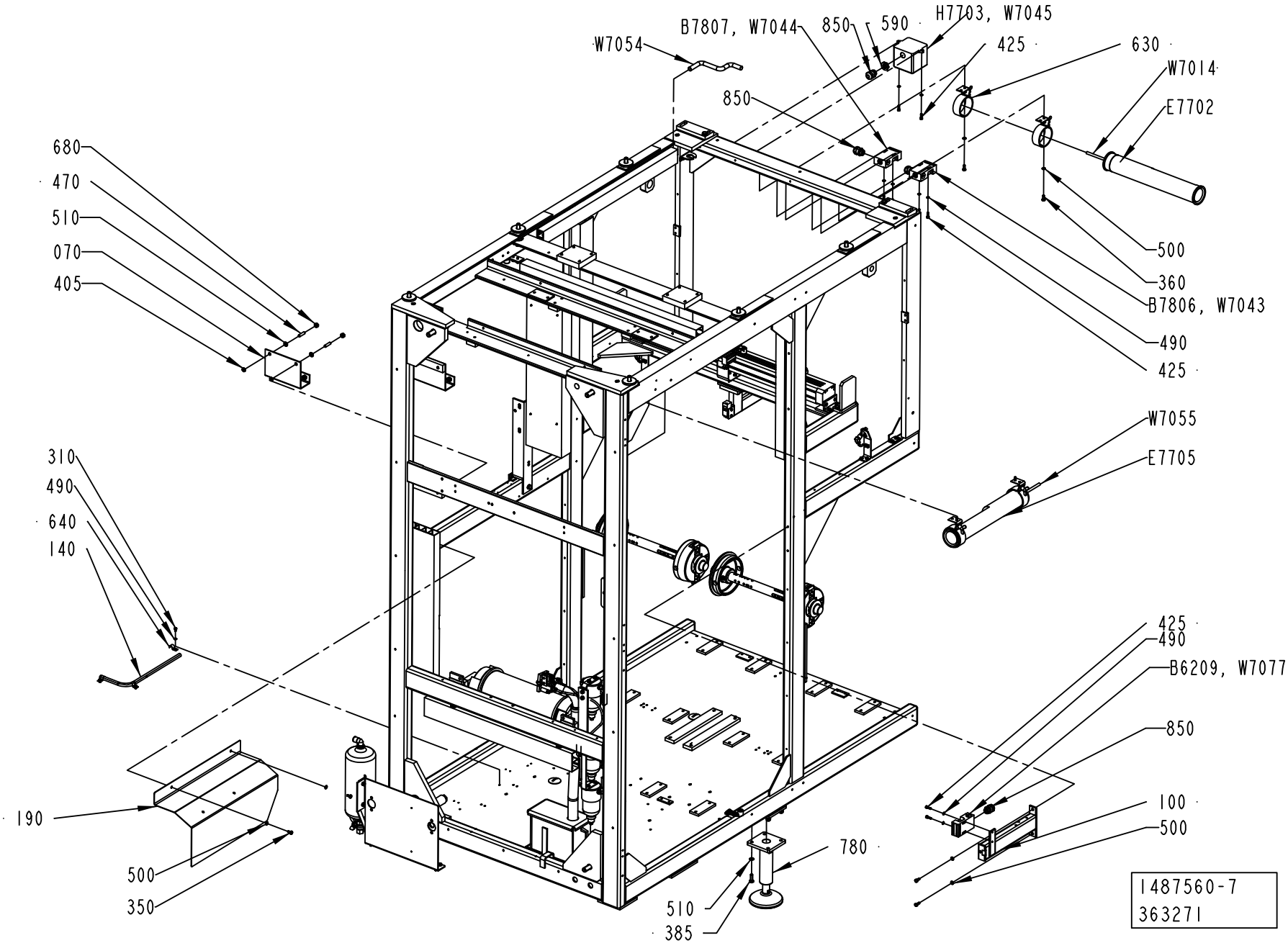

ECM: 369648 - 20081002
Group number: 1487560-0200
Assembly Drawing: 1487560-7_2_AH

This list covers pages from 8-110 to 8-117

Pos	Part No	UN	Qty	Description	Page No
Common Parts (Cont'd)					
160	2529551-0000		1	PROTECTION PLATE	
185	2538075-0000		1	BRACKET	
190	1519588-0000		1	PROTECTION PLATE	
220	1038865-0000		4	SPACER DISC	
235	1538868-0000		6	BRACKET	
260	1488005-0000		4	BEARING BLOCK	
310	312105-0323		5	SCREW M6S ISO 4017 M5X8 A480	
315	352113-0205		2	ANCHOR PLATES FOR STRIPS, TYPE TM2S8-C10	
320	312105-0327		4	SCREW M6S ISO 4017 M5X12 A480	
350	312105-0366		4	SCREW M6S ISO 4017 M6X12 A480	
355	312125-0285		2	SCREW ISO 1207 M4X6 A4	
370	312145-0327		4	SCREW ISO 2009 MFS M5X12 A4	
375	312105-0451		4	SCREW M6S ISO 4017 M8X20 A480	
395	315115-0153		12	WASHER PLAIN, TBRB 6,4/12 H=3	
400	312105-0640		4	SCREW M6S ISO 4014 M16X100 A480	
405	90062-0016		5	LOCK WASHER SERRAT.EXT.GEAR,8,4/15 H=0,8	
410	312125-0220		2	SCREW ISO 1207 M3X6 A4	
420	312105-0329		12	SCREW M6S ISO 4017 M5X16 A480	
425	312115-0329		10	SCREW ISO4762 M5X16 A4 80	
430	312115-0463		8	SCREW ISO4762 M8X60 A4 80	
450	312155-0366		4	SCREW DIN 7991 MF6S M6X12 A4 70	
470	312318-0455		4	SCREW ISO4029 M8X30 A4	
490	315105-0146		19	WASHER BRB 5,3X10 RFR	
570	359705-0005		2	WARNING SIGN ISO, MOVING PART	
580	90002-0010		2	BLANK-OFF PLUG, PR 37 SKINDICHT-BLK29	
590	90458-0323		1	NUT, M20X1,5	
630	90164-0303		4	LIGHT FIXTURE, BRACKET 70MM	
640	90165-0009		3	PIPE CLIP FOR TUBE D=12 MM	
660	90232-0333		1	REFLECTOR E39-R1	
670	90261-0016		24	PLUG, BLIND, PLASTIC GPN300V2	
680	312605-0318		6	HEXAGON NUT, M6M M8 A280	
74124	90166-0194	MM	3000	TUBE 8 MM PUR BLUE	
741242	90166-0194	MM	1500	TUBE 8 MM PUR BLUE	
74132	90166-0194	MM	3000	TUBE 8 MM PUR BLUE	
741322	90166-0194	MM	1500	TUBE 8 MM PUR BLUE	
770	90459-3832		1	VENTING BOX, P9852	
800	312927-0150		4	RIVET NUT M8, CLAMP. LENGTH 3,0 - 4,5	
810	1549324-0000		1	BRACKET	
820	312105-0449		1	SCREW M6S ISO 4017 M8X16 A480	
830	90459-1848		1	TAPE, SAFETY WALK R25MM X 18,3M	
840	1558798-0000		1	BRACKET	
850	90458-0315		5	CABLE GLAND, M20X1,5, NO.5311 1120	
B6209	90459-0472		1	KEY SAF.SW. AZ 16 02ZVRK-M20-2152-2254	
B7411	90600-0460		1	INDUCTIVE SWITCH, E2A-M12KN05-M1-B1-TP	
B7414	90600-0460		1	INDUCTIVE SWITCH, E2A-M12KN05-M1-B1-TP	
B7801	90459-0472		1	KEY SAF.SW. AZ 16 02ZVRK-M20-2152-2254	
B7806	90459-0472		1	KEY SAF.SW. AZ 16 02ZVRK-M20-2152-2254	
B7807	90459-0472		1	KEY SAF.SW. AZ 16 02ZVRK-M20-2152-2254	
E7702	90164-0015		1	LIGHT FIXTURE, RL70CV-111 / 230V 50HZ	
	92297-0301		*1*	*STARTER 4-65W S\10, E 8219023*	
	90297-0007		*1*	*FLUORESCENT TUBE, PLS 11*	
E7705	90164-0015		1	LIGHT FIXTURE, RL70CV-111 / 230V 50HZ	
	92297-0301		*1*	*STARTER 4-65W S\10, E 8219023*	
	90297-0007		*1*	*FLUORESCENT TUBE, PLS 11*	
H7703	90052-0011		1	HORN HOOTERT 24:48VDC.PT NO.1YA030221	
W7014	351150-0412	MM	4000	CABLE OLFLEX 3X1,5 MM2 LIGHT/GREY	
W7024	90458-1076		1	L-SHAPED CONNECTOR CABLE 933 235-042	
W7025	90458-1076		1	L-SHAPED CONNECTOR CABLE 933 235-042	
W7042	351150-0405	MM	4000	CABLE OLFLEX 5X0,75 MM2 LIGHT/GREY	
W7043	351150-0405	MM	4000	CABLE OLFLEX 5X0,75 MM2 LIGHT/GREY	
W7044	351150-0405	MM	4000	CABLE OLFLEX 5X0,75 MM2 LIGHT/GREY	
W7045	351150-0431	MM	4000	CABLE OLFLEX 2X0,75 MM2 LIGHT/GREY	
W7054	351150-0406	MM	8000	CABLE OLFLEX 7X0,75 MM2 LIGHT/GREY	
W7055	351150-0412	MM	4000	CABLE OLFLEX 3X1,5 MM2 LIGHT/GREY	
W7077	351150-0405	MM	5000	CABLE OLFLEX 5X0,75 MM2 LIGHT/GREY	

Machine Type | Group Description | Used-In | Group Number | Page No

MACHINE BODY

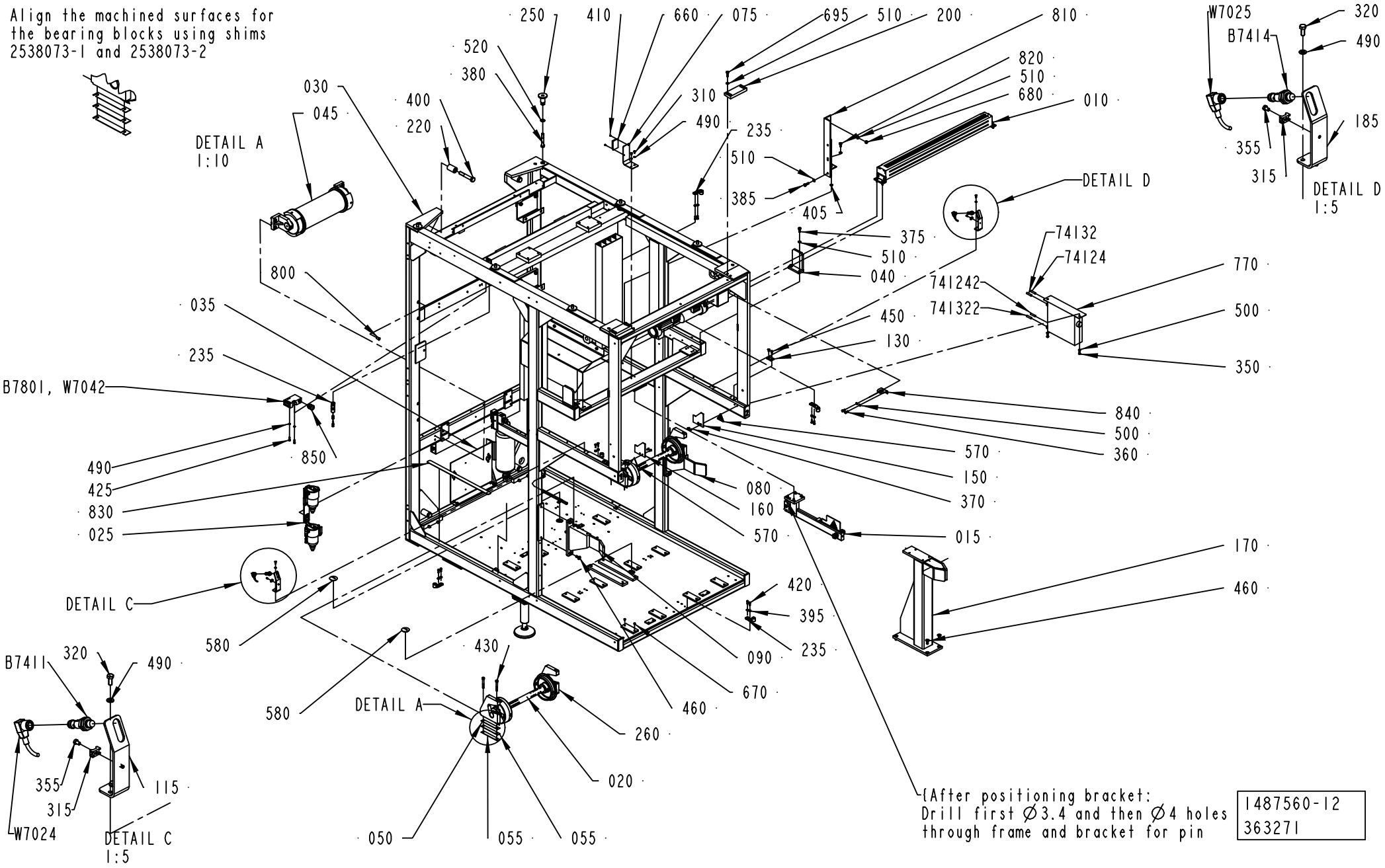

Pos	Part No	UN	Qty	Description	Page No
SEE PREVIOUS LISTS PAGES: 8-111, 8-113.					

Pos	Part No	UN	Qty	Description	Page No

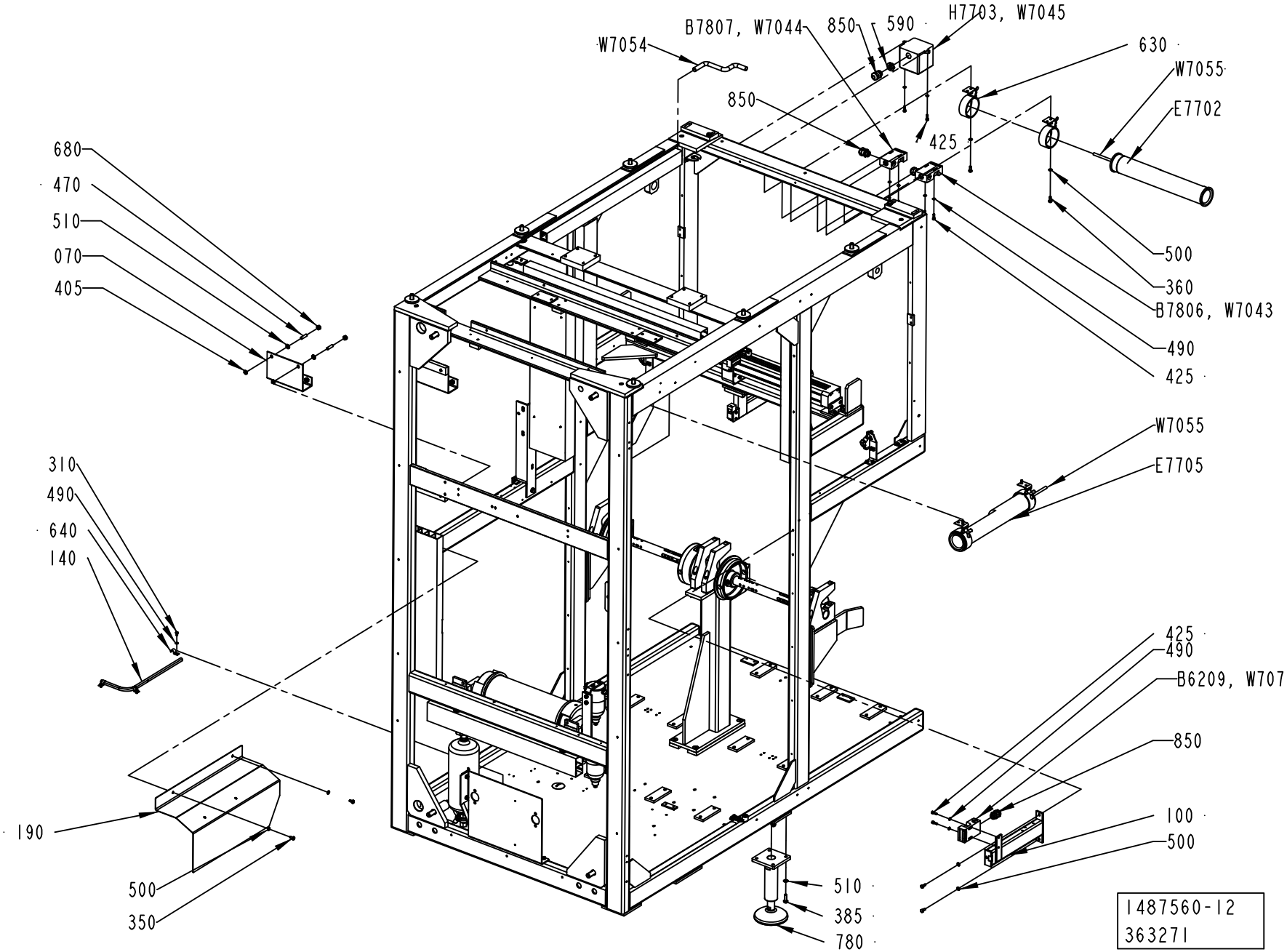
W7054
B7807, W7044
850
590
H7703, W7045
630
W7055
E7702
850
425
680
470
510
070
405
500
360
B7806, W7043
490
425
W7055
E7705
310
490
640
140
425
490
B6209, W7077
850
100
500
190
500
350
510
385
780
1487560-12
363271

Pos	Part No	UN	Qty	Description	Page No
SEE PREVIOUS LISTS PAGES: 8-111, 8-113.					

Pos	Part No	UN	Qty	Description	Page No

PAPER REEL HOLDER

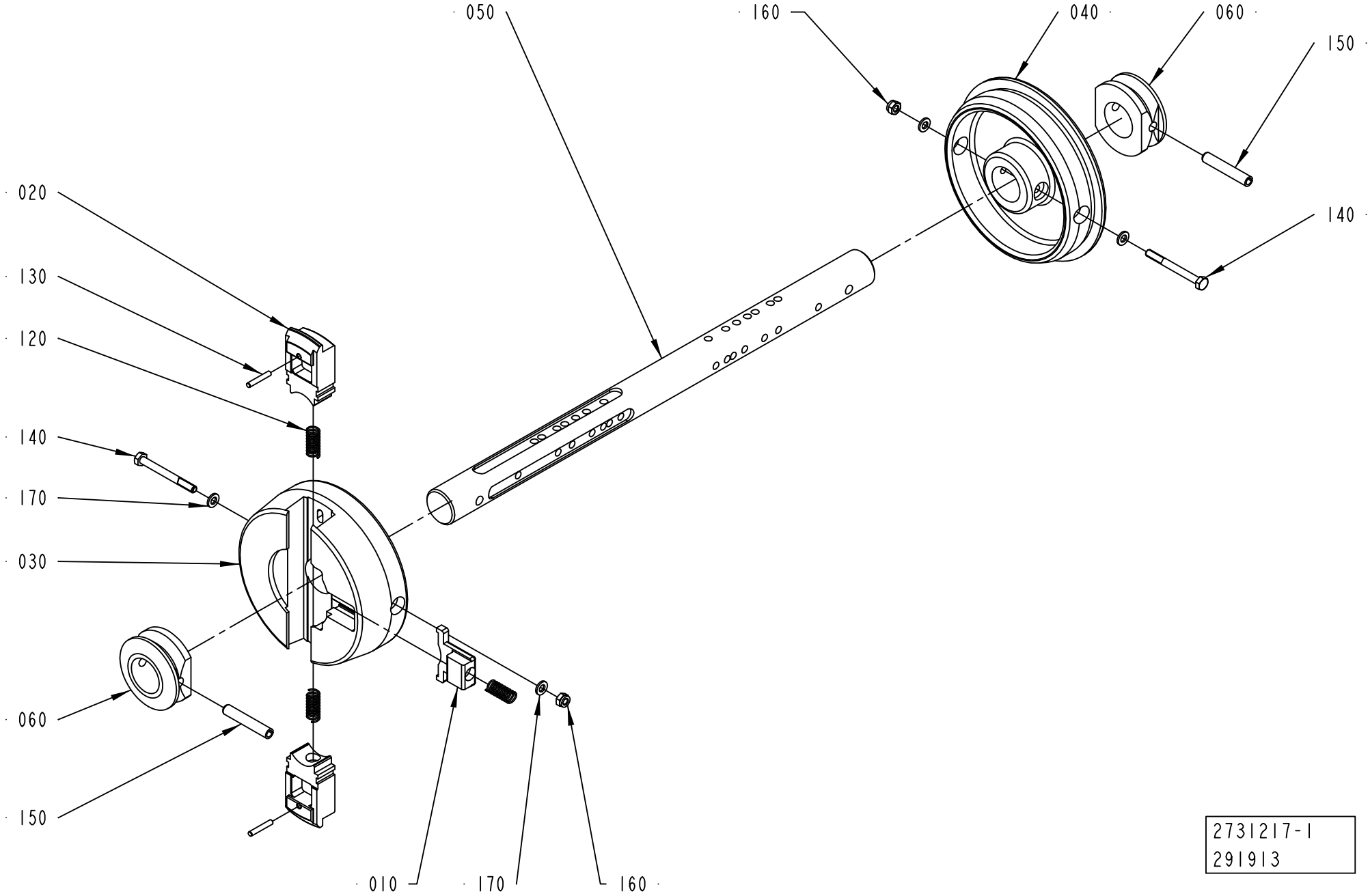

2731217-1
291913

ECM: 300589 - 20070508
Group number: 2731217-0100
Assembly Drawing: 2731217-1_1_AA

Pos	Part No	UN	Qty	Description	Page No
-					
010	272728-0000		1	BARRIER	
020	2851385-0000		2	PLUNGER	
030	2790925-0000		1	SLEEVE	
040	2731210-0000		1	SLEEVE	
050	2790929-0000		1	SHAFT	
060	2731212-0000		2	RING	
120	90335-0025		3	COMP. SPRING 22010, 1X11X26	
130	311103-0274		2	PARALLEL PIN ISO 2338 4M6X25 A1	
140	312105-0382		2	SCREW M6S ISO 4014 M6X60 A480	
150	311112-0385		2	SPRING PIN, ISO 8752 8X50-C	
160	312812-0316		2	HEXAGON NUT, NY-LOCK M6 A480	
170	315105-0153		4	WASHER BRB 6,4X12 RFR	

Pos	Part No	UN	Qty	Description	Page No

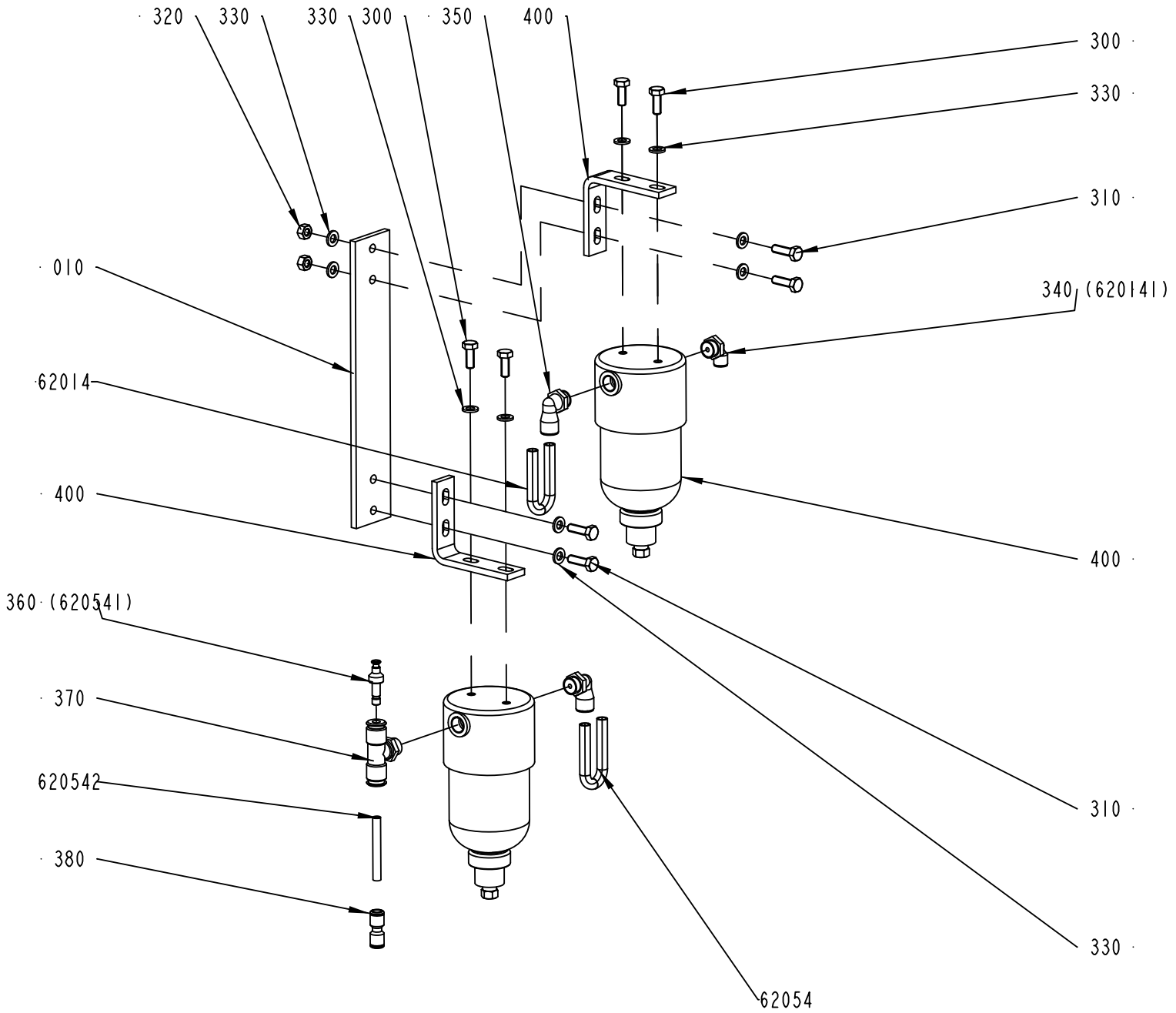

2541891-1
ECM 177034

ECM: 178372 - 20041025
Group number: 2541891-0100
Assembly Drawing: 2541891-1_1_AC

Pos	Part No	UN	Qty	Description	Page No
-					
010	2518119-0000		1	PLATE	
300	312105-0368		4	SCREW M6S ISO 4017 M6X16 A480	
310	312105-0370		4	SCREW M6S ISO 4017 M6X20 A480	
320	312605-0316		2	HEXAGON NUT, M6M M6 A280	
330	315105-0153		10	WASHER BRB 6,4X12 RFR	
340	90458-2957		1	ELBOW PIPE JOINT, EXT.THREAD, D=6MM-G1/4	
350	90458-2958		2	ELBOW PIPE JOINT, EXT.THREAD, D=8MM-G1/4	
360	342716-0202		1	REDUCER 4-6	
370	342742-0103		1	T-COUPLING,ADJUST,F.PLASTIC TUBE 6-G1/4"	
380	342728-0102		1	PIPE COUPLING 6 MM	
400	90277-0116		2	FILTER HOUSING / ART.NO FILTER 58P-S5430	
	90277-0406		*1*	*FILTER CARTRIDGE 100-12-BX*	
62014	90166-0194	MM	3500	TUBE 8 MM PUR BLUE	
62054	90166-0194	MM	3500	TUBE 8 MM PUR BLUE	
620542	90166-0193	MM	2000	TUBE 6 MM PUR BLUE	

Pos	Part No	UN	Qty	Description	Page No

PNEUMATIC ACCUMULATOR

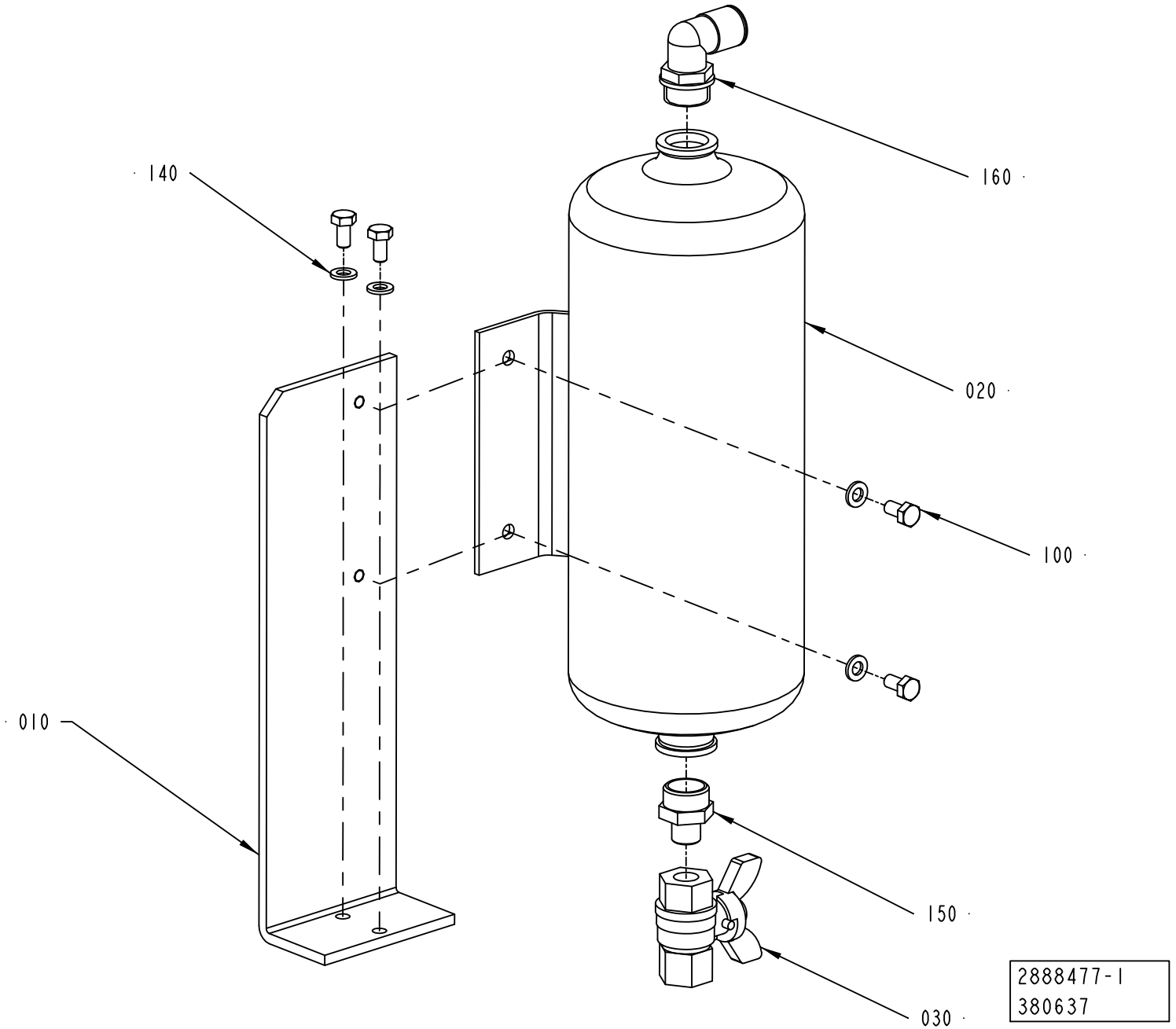

ECM: 381590 - 20090401
Group number: 2888477-0100
Assembly Drawing: 2888477-1_1_AB

Pos	Part No	UN	Qty	Description	Page No
-					
010	3010129-0000		1	SUPPORT	
020	90457-0100		1	ACCUMULATOR CRVZS-2	
030	90187-0088		1	BALL VALVE G1/4, NPBR	
100	312105-0366		4	SCREW M6S ISO 4017 M6X12 A480	
120	312605-0316		2	HEXAGON NUT, M6M M6 A280	
140	315105-0153		4	WASHER BRB 6,4X12 RFR	
150	342700-0205		1	NIPPLES,HEXAGON,EXT.G-THREAD G1/2"-G1/4"	
160	350002-0016		1	PUSH-IN L-FITTING QSL-F-G1/2-12	

Pos	Part No	UN	Qty	Description	Page No

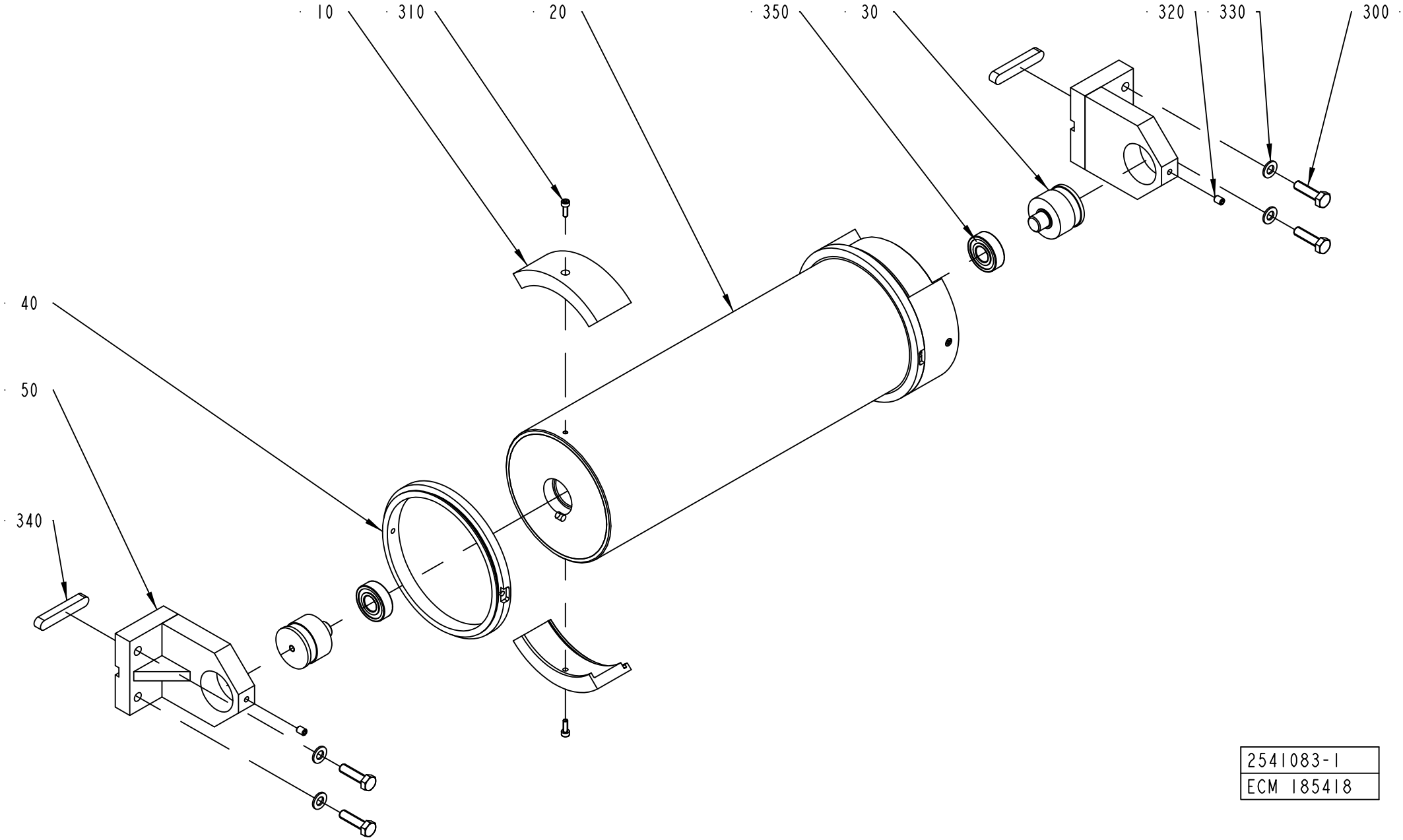

2541083-1
ECM 185418

ECM: 321099 - 20080101
Group number: 2541083-0100
Assembly Drawing: 2541083-1_1_AB

Pos	Part No	UN	Qty	Description	Page No
TBA 0200S, TPA 0250SQ, TPA 0200SQ (See drawing on page: 8-124)					
010	2523766-0010		4	BRACKET	
TBA 0200B, TBA 0200SQ, TBA 0250B, TBA 0330S, TBA 0250SQ (See drawing on page: 8-124)					
010	2523766-0007		4	BRACKET	
TBA 0200M, TBA 0250S (See drawing on page: 8-124)					
010	2523766-0009		4	BRACKET	
TBA 0500S (See drawing on page: 8-124)					
010	2523766-0005		4	BRACKET	
TPA 0500SQ (See drawing on page: 8-124)					
010	2523766-0006		4	BRACKET	
TBA 0500SQ, TBA 1000SQ (See drawing on page: 8-124)					
010	2523766-0003		4	BRACKET	
TBA 1000B, TBA 1500S (See drawing on page: 8-124)					
010	2523766-0001		4	BRACKET	
TBA 1000S (See drawing on page: 8-124)					
010	2523766-0002		4	BRACKET	
TBA 1890S, TBA 2000S, TBA 1400B (See drawing on page: 8-124)					
010	2701881-0000		4	BRACKET	
TGA 1000SQ, TGA 0750SQ, TGA 0500SQ (See drawing on page: 8-124)					
010	2523766-0013		4	BRACKET	
TPA 0330SQ (See drawing on page: 8-124)					
010	2523766-0008		4	BRACKET	
TPA 1000SQ, TPA 0750SQ (See drawing on page: 8-124)					
010	2523766-0012		4	BRACKET	
Common Parts					
020	2523765-0000		1	BENDING ROLLER	
030	1499584-0000		2	AXLE PIN	
040	2701880-0000		2	FLANGE	
050	2506328-0000		2	BRACKET	
300	312105-0455		4	SCREW M6S ISO 4017 M8X30 A480	
310	312115-0291		4	SCREW ISO4762 M4X12 A4 80	
320	312318-0362		2	SCREW ISO4029 M6X8 A4	
330	315105-0165		4	WASHER BRB 8,4X16 RFR	
340	315705-0305		2	PARALLEL KEY W. ROUND ENDS 10X8X60 MM	
350	321313-0102		2	BALL BEARING, 15X35X11 MM	

Pos	Part No	UN	Qty	Description	Page No

Machine Type | Group Description | Used-In | Group Number | Page No

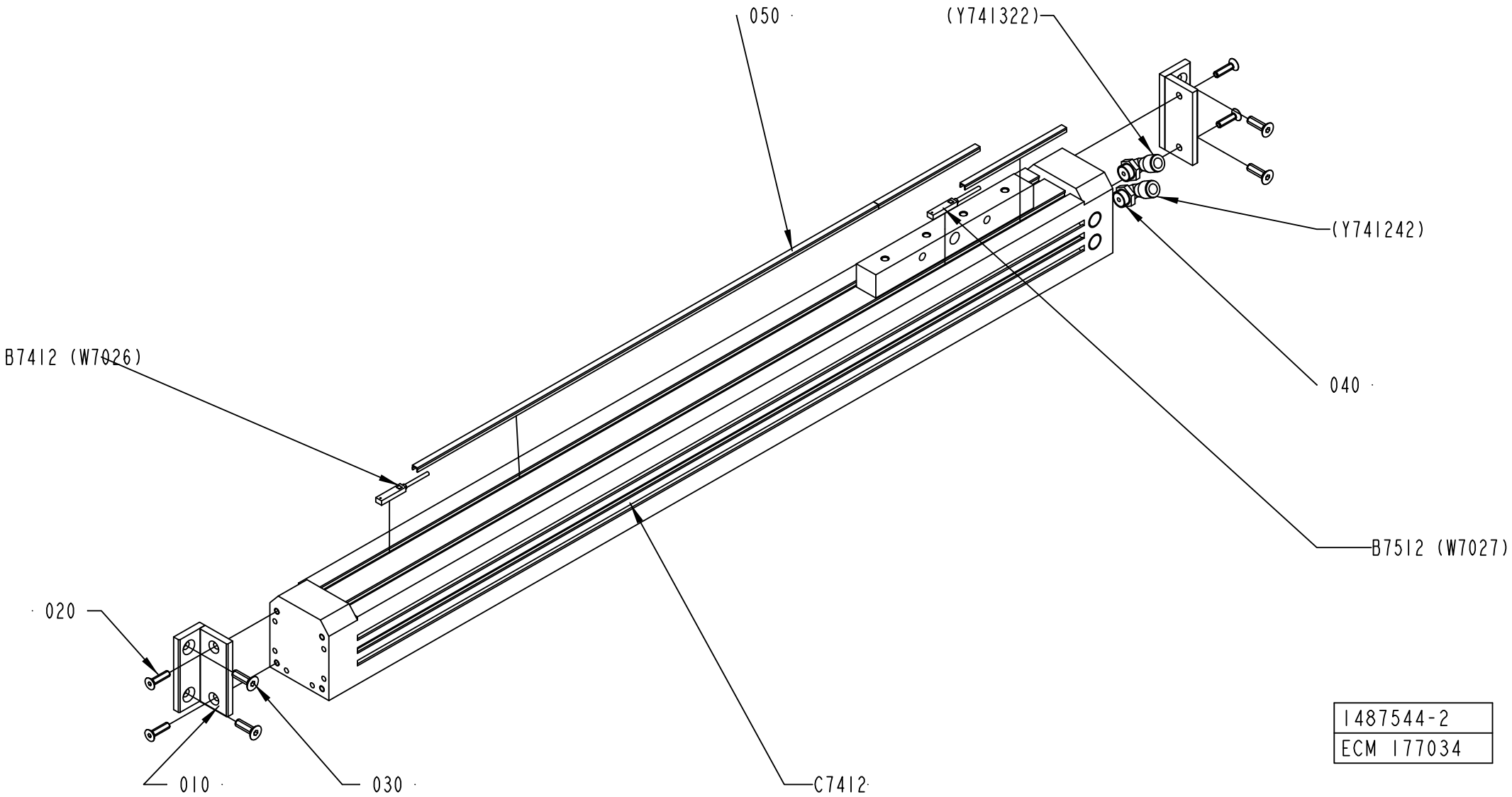
050
(Y741322)
(Y741242)
040
B7412 (W7026)
B7512 (W7027)
020
010
030
C7412
1487544-2
ECM 177034

ECM: 177932 - 20041025
Group number: 1487544-0200
Assembly Drawing: 1487544-2_1_AB

Pos	Part No	UN	Qty	Description	Page No
-					
010	1498457-0000		2	BRACKET	
020	312155-0331		4	SCREW DIN 7991 MF6S M5X20 A4 70	
030	312155-0370		4	SCREW DIN 7991 MF6S M6X20 A4 70	
040	90458-2958		2	ELBOW PIPE JOINT, EXT.THREAD, D=8MM-G1/4	
050	90458-0273		1	SLOT COVER ABP-5-S, 151680	
B7412	90044-0165		1	PROX.SWITCH SME-8-K5-LED-24	
B7512	90044-0165		1	PROX.SWITCH SME-8-K5-LED-24	
C7412	90459-1849		1	DOUBLE ACTING, SHUTTLE, CYL. 40-550	

Pos	Part No	UN	Qty	Description	Page No

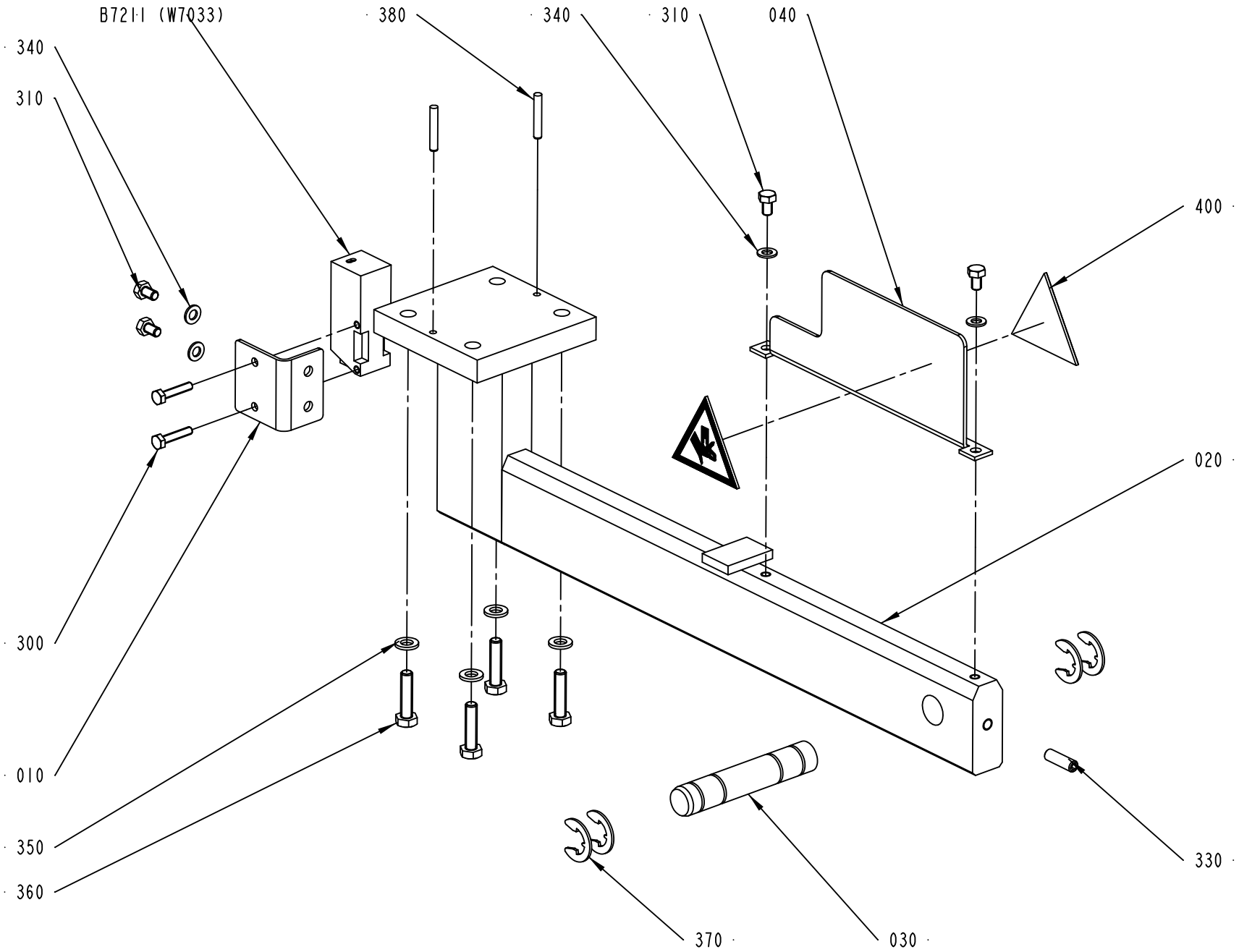

2541890-1
ECM 121839

ECM: 178370 - 20041005
Group number: 2541890-0100
Assembly Drawing: 2541890-1_1_AB

Pos	Part No	UN	Qty	Description	Page No
-					
010	1490210-0000		1	PLATE	
020	1490219-0000		1	BRACKET	
030	1499573-0000		1	PIN	
040	1512275-0000		1	PROTECTION PLATE	
300	312105-0295		2	SCREW M6S ISO 4017 M4X20 A470	
310	312105-0323		4	SCREW M6S ISO 4017 M5X8 A480	
330	312318-0370		1	SCREW ISO4029 M6X20 A4	
340	315105-0146		4	WASHER BRB 5,3X10 RFR	
350	315105-0153		4	WASHER BRB 6,4X12 RFR	
360	312105-0372		4	SCREW M6S ISO 4017 M6X25 A480	
370	315755-0112		4	RETAINING RING SHAFT DIN 6799 12 A2	
380	311103-0274		2	PARALLEL PIN ISO 2338 4M6X25 A1	
400	359705-0005		2	WARNING SIGN ISO, MOVING PART	
B7211	90232-0129		1	PH.CELL E3S-CR61-5M	

Pos	Part No	UN	Qty	Description	Page No

MACHINE BODY

080
W7011
W7020
W7024
W7028
W7031
W7042
W7055
W7077
74202
74204
73032
73034
74142
74144

050
W7014
W7025
W7026
W7027
W7029
W7033
W7043
W7044
W7045
W7054
74154
74152
73154
73152

030

W7010	W7028	W7042	74204	74074
W7011	W7029	W7043	74202	74084
W7014	W7030	W7044	74154	74104
W7020	W7031	W7045	74152	74142
W7023	W7033	W7054	73034	74144
W7024	W7035	W7055	73032	74072
W7025	W7036	W7077	73154	74102
W7026	W7040	W7304	73152	620542
W7027	W7041	W7305		

040
W7024
W7028
W7031
W7077
73034
73032
74204
74202
74144
74142

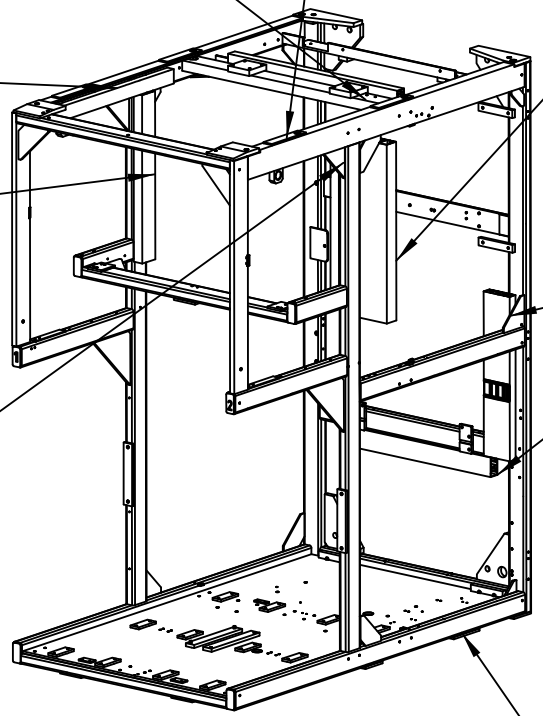

060
W7024
W7028
W7031
W7077
74204
74202

100
W7046 62034
W7049 62032
W7013 62054
W7012 62014
W7015 MAIN AIR
W7017 620542
W7018
W7022
W7038
W7034
W7039
W7050
W7056
W7072
W7073
W7019
W7417

020
W7013
W7046
W7049
W7017
W7018
W7022
W7050
W7047
W7072
W7073
W7019
62034
62032
62054
62014
620542

060
W7025
W7026
W7027
W7033

010

INSIDE CABLE CONDUIT:
620542 W7010
74072 W7040
74074 W7041
74102 W7304
74104 W7305
74084

1512279-2
ECM 177034

ECM: 287797 - 20070227
Group number: 1512279-0200
Assembly Drawing: 1512279-2_1_AD

Pos	Part No	UN	Qty	Description	Page No
-					
010	2529990-0000		1	FRAME	
020	1512421-0000		1	CABLE DUCT	
030	2524606-0000		1	CABLE DUCT	
040	1512423-0000		1	CABLE DUCT	
050	2524607-0000		1	CABLE DUCT	
060	1512425-0000		2	CABLE DUCT	
080	1512426-0000		1	CABLE DUCT	
100	2529544-0000		1	CABLE DUCT	
110	312105-0364		2	SCREW M6S ISO 4017 M6X10 A480	
120	312115-0364		16	SCREW ISO4762 M6X10 A4 80	
130	312503-0275		4	TAPPING SCREW ISO 7049-ST3,5X6,5-C-Z	
150	90143-0060	MM	2600	EDGE STRIP 9,5X6,3MM BLACK PVC	
160	315125-0153		2	WASHER TBRSB 6,4X22X4 A4	
170	352113-0205		25	ANCHOR PLATES FOR STRIPS, TYPE TM2S8-C10	
180	312125-0285		25	SCREW ISO 1207 M4X6 A4	
190	352113-0102		25	CABLE TIE, BLACK 188X4,8 MM	

Pos	Part No	UN	Qty	Description	Page No

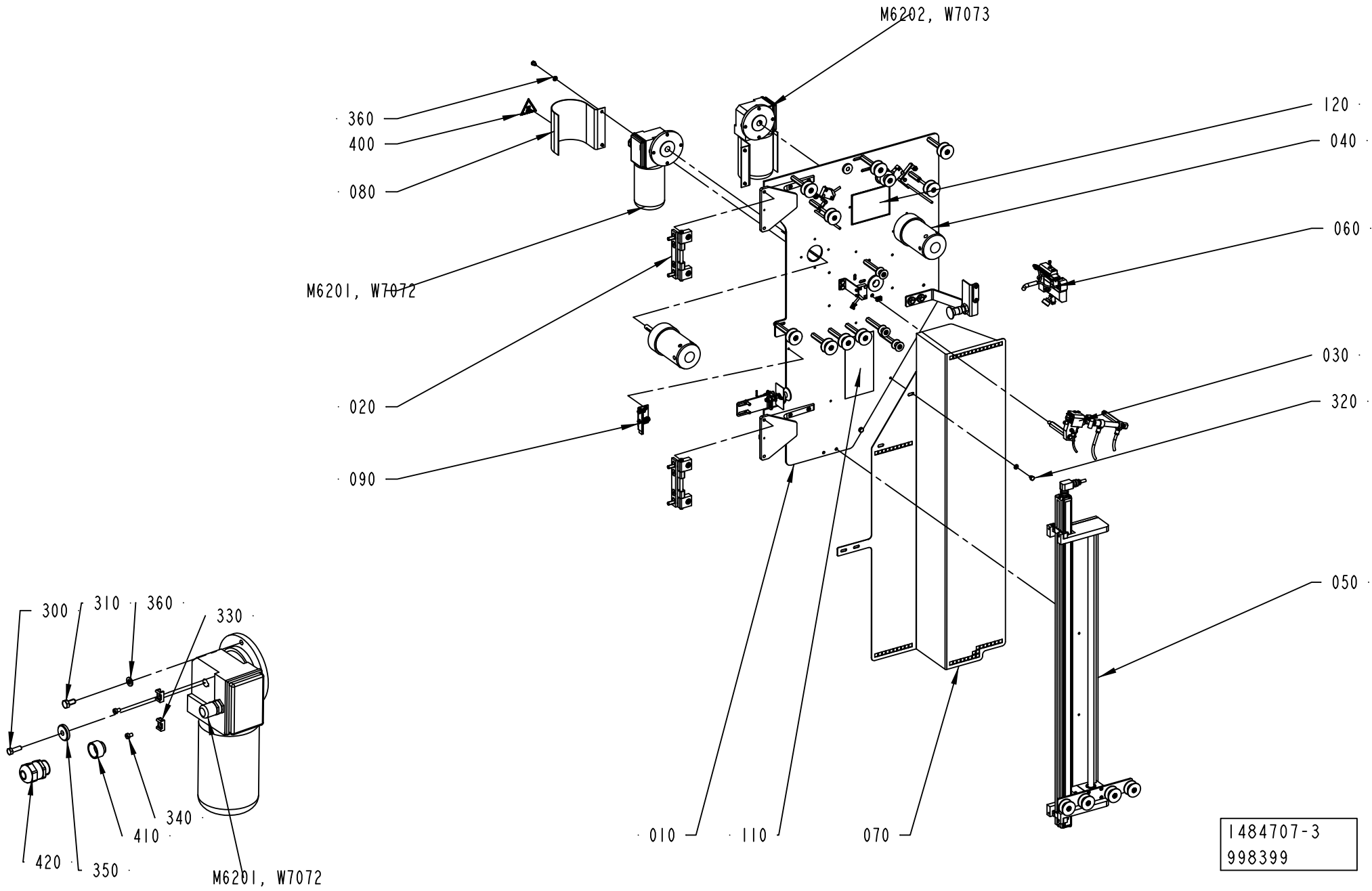
M6202, W7073
360
400
080
M6201, W7072
020
090
120
040
060
030
320
050
010
110
070
1484707-3
998399
300
310
360
330
340
410
420
350
M6201, W7072

ECM: 998399 - 20081002
Group number: 1484707-0200
Assembly Drawing: 1484707-3_1_AF

Pos	Part No	UN	Qty	Description	Page No
-					
010	1512428-0200		1	MOUNTING SHEET	**8-135**
020	1484720-0100		2	HINGE	**8-137**
030	1490806-0200		1	HEATING DEVICE	**8-139**
040	1484725-0100		2	HUB	**8-141**
050	1511585-0200		1	STRIP GUIDE	**8-143**
060	1524477-0200		1	CUTTING TABLE	**8-145**
070	1517107-0000		1	PROTECTION	
080	1498445-0000		2	COVER	
090	2510401-0100		1	HOLDER	**8-147**
110	2558879-0000		1	SIGN	
120	2558878-0000		1	SIGN	
300	312105-0329		2	SCREW M6S ISO 4017 M5X16 A480	
310	312105-0366		8	SCREW M6S ISO 4017 M6X12 A480	
320	312105-0362		6	SCREW M6S ISO 4017 M6X8 A480	
330	352113-0205		4	ANCHOR PLATES FOR STRIPS, TYPE TM2S8-C10	
340	312125-0285		4	SCREW ISO 1207 M4X6 A4	
350	315125-0153		2	WASHER TBRSB 6,4X22X4 A4	
360	315105-0153		14	WASHER BRB 6,4X12 RFR	
400	359705-0007		2	WARNING SIGN ISO, HOT SURFACE	
410	90458-1155		2	ENLARGING SLEEVE, 5210 4452	
420	90458-0307		2	CABLE GLAND, M20X1,5, NO.5311 1020	
430	312125-0285		4	SCREW ISO 1207 M4X6 A4	
440	352113-0205		4	ANCHOR PLATES FOR STRIPS, TYPE TM2S8-C10	
M6201	90459-6951		1	GEARS,WORM MOTOR MC 320P2T/15/B5S-SRD057	
M6202	90459-6950		1	GEARS, WORM MOTOR MC320P2T/15/B5D-SRD057	
W7072	90220-0104	MM	4500	SCR. CABLE 4X1,5MM2	
W7073	90220-0104	MM	4500	SCR. CABLE 4X1,5MM2	

Pos	Part No	UN	Qty	Description	Page No

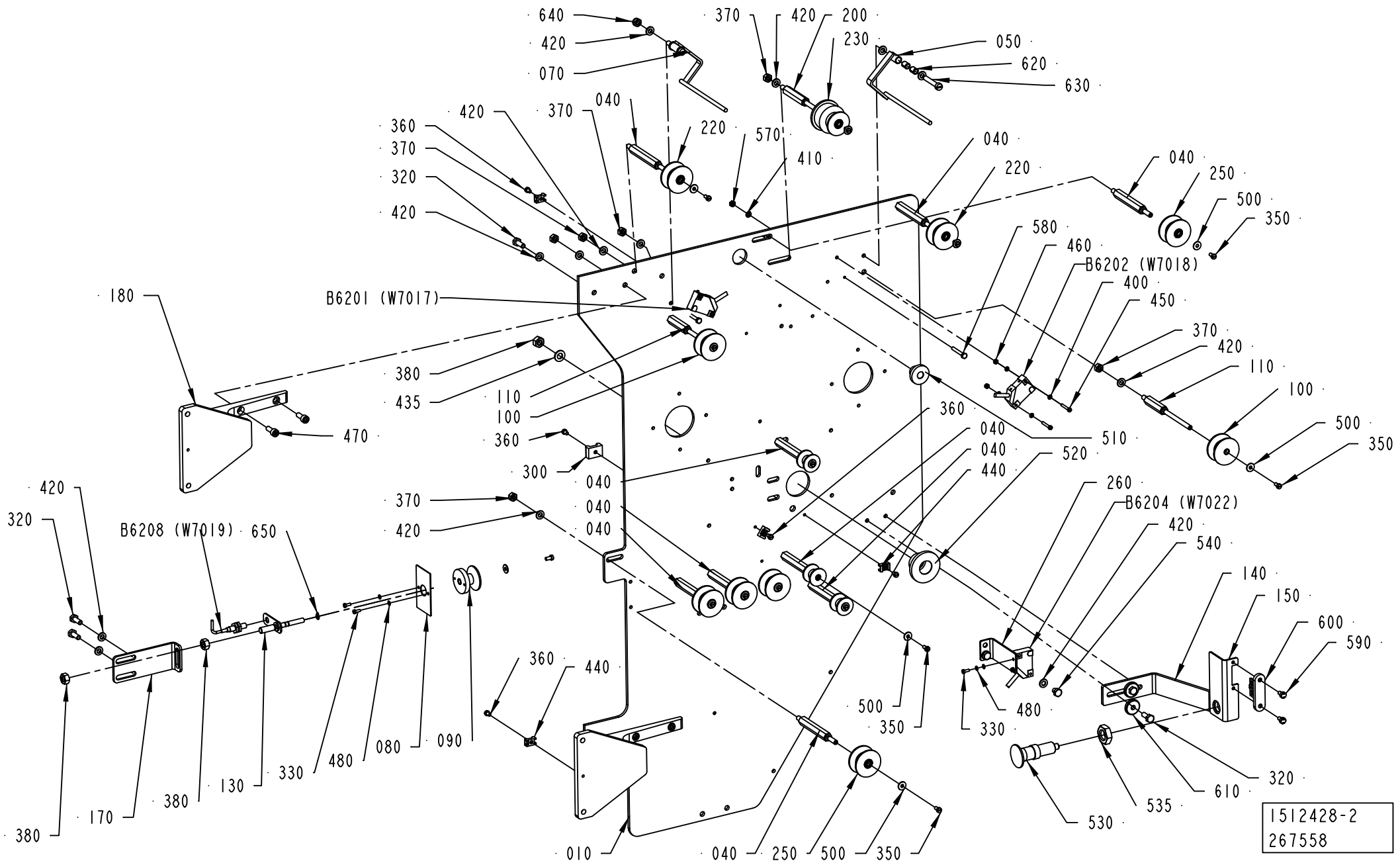
640
420
070
370
420
200
230
050
620
630
420
370
040
220
570
410
360
370
320
420
040
220
040
250
500
350
580
460
B6202 (W7018)
400
450
370
420
110
100
500
350
180
B6201 (W7017)
380
435
110
100
470
360
300
040
040
040
360
040
040
440
510
520
260
B6204 (W7022)
420
540
140
150
600
590
420
320
B6208 (W7019)
650
370
420
040
040
360
440
500
350
480
330
610
320
535
530
380
170
380
130
330
480
080
090
010
040
250
500
350
1512428-2
267558

ECM: 383474 - 20090402
Group number: 1512428-0200
Assembly Drawing: 1512428-2_1_AE

Pos	Part No	UN	Qty	Description	Page No
A3/FLEX					
170	2525339-0000		1	BRACKET	
Common Parts					
010	1484708-0000		1	MOUNTING PLATE	
040	536916-0000		10	AXLE PIN	
050	1490818-0000		1	ARM	
070	1490187-0000		1	ROCKER ARM	
080	1349581-0000		1	FLAG	
090	2831679-0000		1	ROLLER	
100	2831684-0000		2	ROLLER	
110	544725-0000		2	AXLE PIN	
130	1484718-0000		1	AXLE PIN	
140	1499569-0000		1	BRACKET	
150	1484740-0000		1	BRACKET	
180	1517087-0000		2	HINGE	
190	2831682-0000		3	ROLLER	
200	1538202-0000		1	AXLE PIN	
220	2831681-0000		2	ROLLER	
230	2831683-0000		1	ROLLER	
250	2831680-0000		5	ROLLER	
260	2515289-0000		1	BRACKET	
300	352113-0203		4	ANCHOR PLATES FOR STRIPS, TYPE TM3S8-M0	
320	312105-0366		6	SCREW M6S ISO 4017 M6X12 A480	
330	312125-0222		4	SCREW ISO 1207 M3X8 A4	
350	312125-0287		14	SCREW ISO 1207 M4X8 A4	
360	312125-0285		8	SCREW ISO 1207 M4X6 A4	
370	312605-0316		16	HEXAGON NUT, M6M M6 A280	
380	312605-0318		3	HEXAGON NUT, M6M M8 A280	
400	315103-0124		8	WASHER, BRB, 3,2/6,H=0,5 NI PL BR	
410	315105-0136		2	WASHER BRB 4,3X8 RFR	
420	315105-0153		28	WASHER BRB 6,4X12 RFR	
435	315105-0165		1	WASHER BRB 8,4X16 RFR	
440	352113-0205		4	ANCHOR PLATES FOR STRIPS, TYPE TM2S8-C10	
450	312125-0230		4	SCREW ISO 1207 M3X20 A4	
460	312605-0310		4	HEXAGON NUT, M6M M3 A280	
470	312115-0368		4	SCREW ISO4762 M6X16 A4 80	
480	315105-0124		6	WASHER BRB 3,2X6 RFR	
500	90005-0082		14	WASHER PLAIN ROUND 4,3(M4)/12,H=1	
510	90015-0021		1	LEAD-IN, TET10-14, E-1458023	
520	90015-0024		1	LEAD-IN, TET20-26, E-1458035	
530	90051-0088		1	ADJUSTMENT SCREW	
535	90099-0131		1	NUT HEX. M16X2 SS	
540	312105-0362		2	SCREW M6S ISO 4017 M6X8 A480	
570	312605-0312		2	HEXAGON NUT, M6M M4 A280	
580	312105-0299		2	SCREW M6S ISO 4017 M4X30 A470	
590	1539387-0000		2	SCREW	
600	90044-0310		1	KEY FOR SAFETY SWITCH AZ 15/16 B1	
610	315125-0153		2	WASHER TBRSB 6,4X22X4 A4	
620	321141-0064		4	BEARING BUSH W/O FLANGE, 6X8X10 MM	
630	312125-0376		2	SCREW ISO 1207 M6X35 A4	
640	312812-0316		2	HEXAGON NUT, NY-LOCK M6 A480	
650	315751-0103		1	RETAINING RING FOR SHAFT DIN 471 6 SS	
B6201	90044-0194		1	PROX.SW. IN5329/IN3002-BPKG(EX90044-104)	
B6202	90044-0194		1	PROX.SW. IN5329/IN3002-BPKG(EX90044-104)	
B6204	90044-0194		1	PROX.SW. IN5329/IN3002-BPKG(EX90044-104)	
B6208	90458-0138		1	PROX.SWITCH E2EG-X1R5B1-5M	

Machine Type	Group Description	Used-In	Group Number	Page No

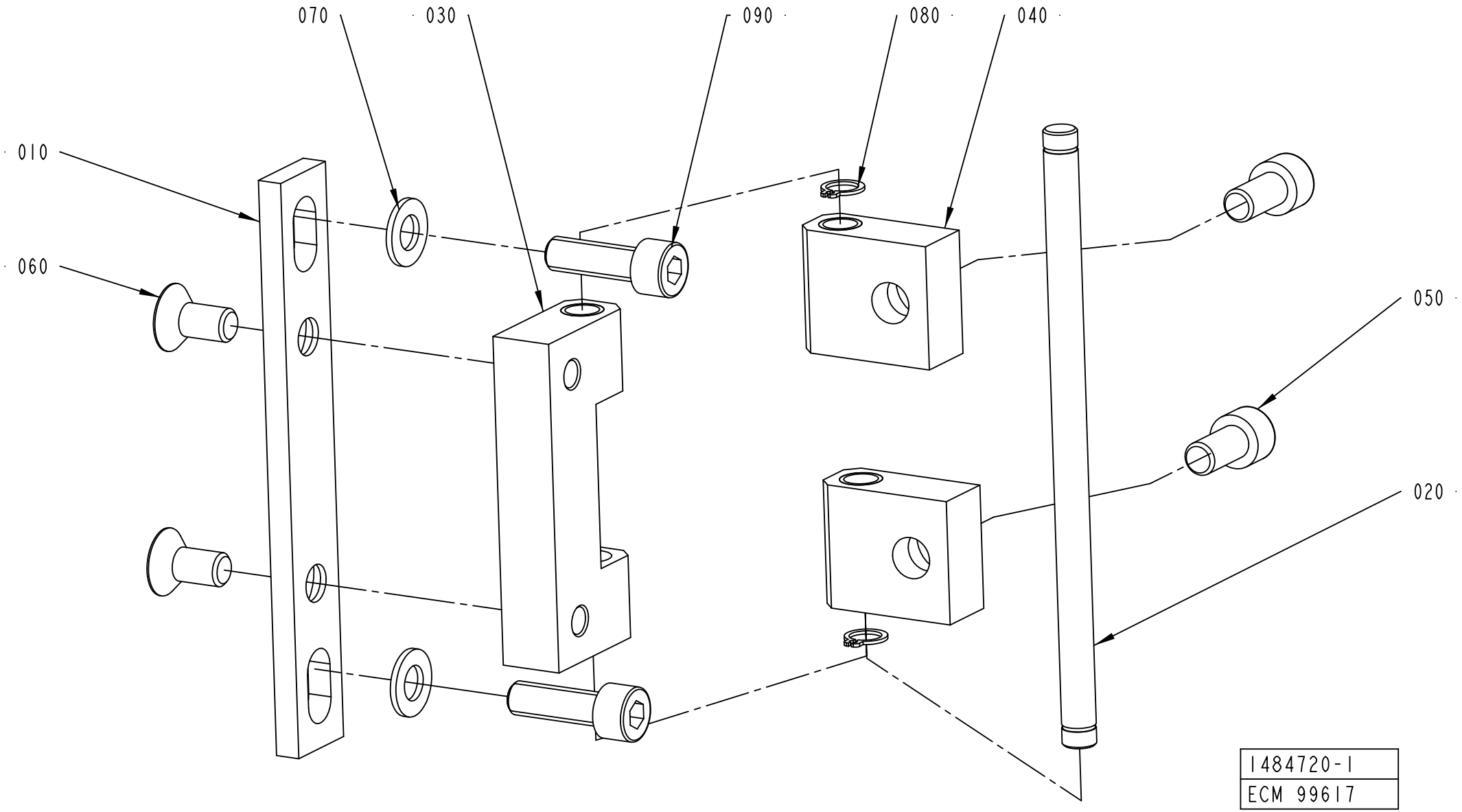
070
030
090
080
040
010
060
050
020
1484720-1
ECM 99617

ECM: 178404 - 20041005
Group number: 1484720-0100
Assembly Drawing: 1484720-1_1_AB

Pos	Part No	UN	Qty	Description	Page No
-					
010	1334187-0000		1	PLATE	
020	1334188-0000		1	AXLE PIN	
030	1334189-0000		1	BLOCK	
040	1334190-0000		2	BLOCK	
050	312115-0449		2	SCREW ISO4762 M8X16 A4 80	
060	312155-0449		2	SCREW DIN 7991 MF6S M8X16 A4 70	
070	315105-0165		2	WASHER BRB 8,4X16 RFR	
080	90141-0015		2	RETAINING RING FOR SHAFT DIN 471 8 SS	
090	312115-0453		2	SCREW ISO4762 M8X25 A4 80	

Pos	Part No	UN	Qty	Description	Page No

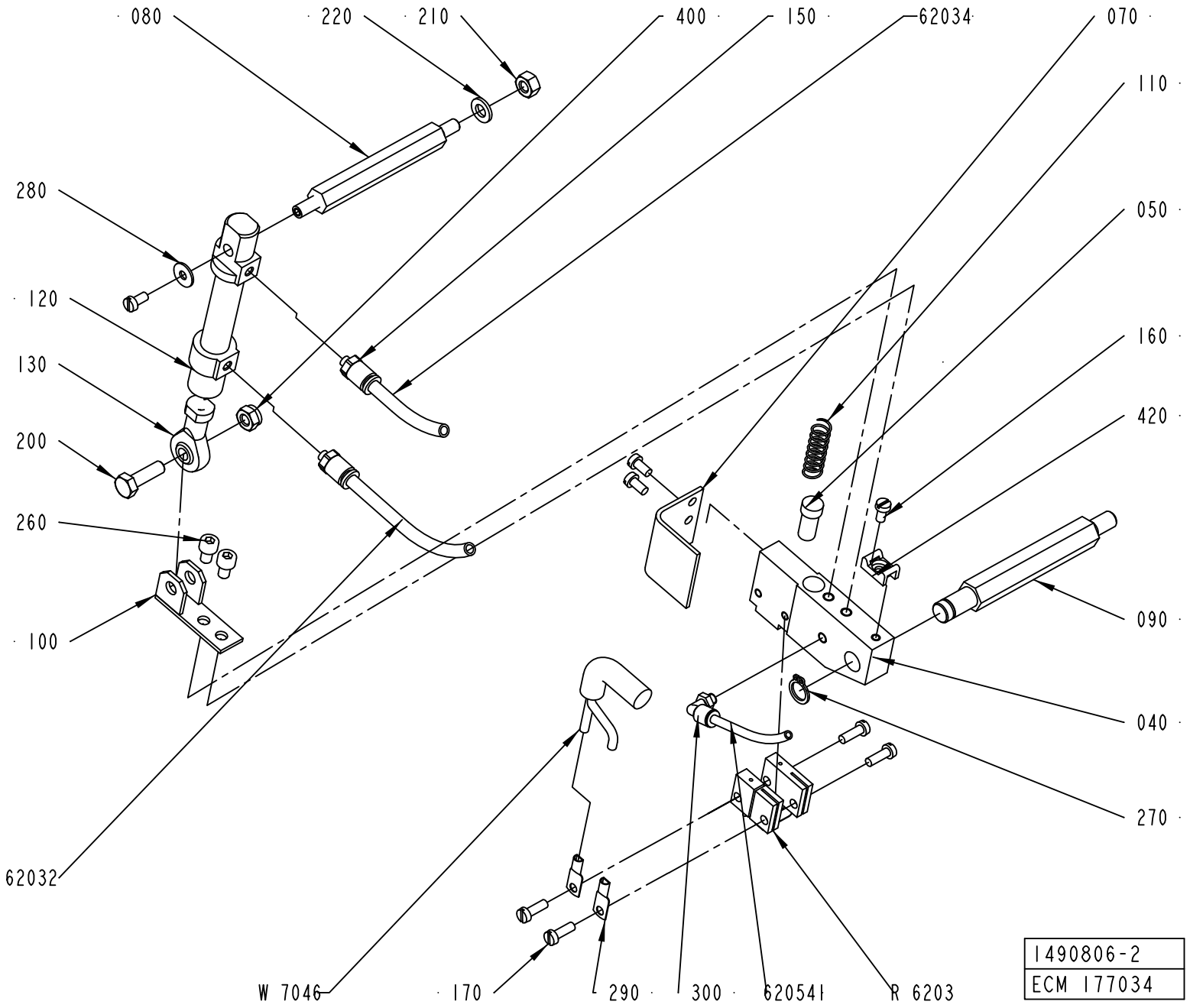
080
220
210
400
150
62034
070
110
280
050
120
160
130
420
200
260
090
100
040
270
62032
W 7046
170
290
300
620541
R 6203
1490806-2
ECM 177034

ECM: 341207 - 20080215
Group number: 1490806-0200
Assembly Drawing: 1490806-2_1_AC

Pos	Part No	UN	Qty	Description	Page No
-					
040	1490804-0000		1	HOLDER	
050	400833-0000		1	PLUNGER	
070	1349181-0000		1	TOUCH GUARD	
080	1037121-0000		1	SHAFT	
090	1037120-0000		1	SHAFT	
100	1037124-0000		1	HOLDER	
110	400828-0000		1	SPRING	
120	90450-0306		1	DOUBLE ACTING, MINI-ISO, CYL. 12-25	
130	90239-0491		1	ROD END, BALL JOINT EYE, MINI-ISO M6	
150	342722-0197		2	STRAIGHT COUPLING	
160	312125-0287		4	SCREW ISO 1207 M4X8 A4	
170	312125-0291		4	SCREW ISO 1207 M4X12 A4	
200	312105-0370		1	SCREW M6S ISO 4017 M6X20 A480	
210	312605-0316		1	HEXAGON NUT, M6M M6 A280	
220	315105-0153		1	WASHER BRB 6,4X12 RFR	
260	312115-0323		2	SCREW ISO4762 M5X8 A4 80	
270	90141-0016		1	RETAINING RING FOR SHAFT DIN 471 10 SS	
280	90005-0082		1	WASHER PLAIN ROUND 4,3(M4)/12,H=1	
290	353104-0140		2	CABLE SHOE, RING UNINS., YAV 06 M 4	
300	90458-2954		1	ELBOW PIPE JOINT, EXT.THREAD, D=4MM M5	
400	312812-0316		1	HEXAGON NUT, NY-LOCK M6 A480	
420	352113-0205		1	ANCHOR PLATES FOR STRIPS, TYPE TM2S8-C10	
62032	90166-0193	MM	4500	TUBE 6 MM PUR BLUE	
62034	90166-0193	MM	4500	TUBE 6 MM PUR BLUE	
620541	90166-0095	MM	1500	TUBE 4 MM PA BLUE (50M)	
R6203	1498047-0000		1	SEALING BLOCK	
W7046	351120-0126	MM	4000	CABLE SILFLEX SIHF 2X4 0046025	

Pos	Part No	UN	Qty	Description	Page No

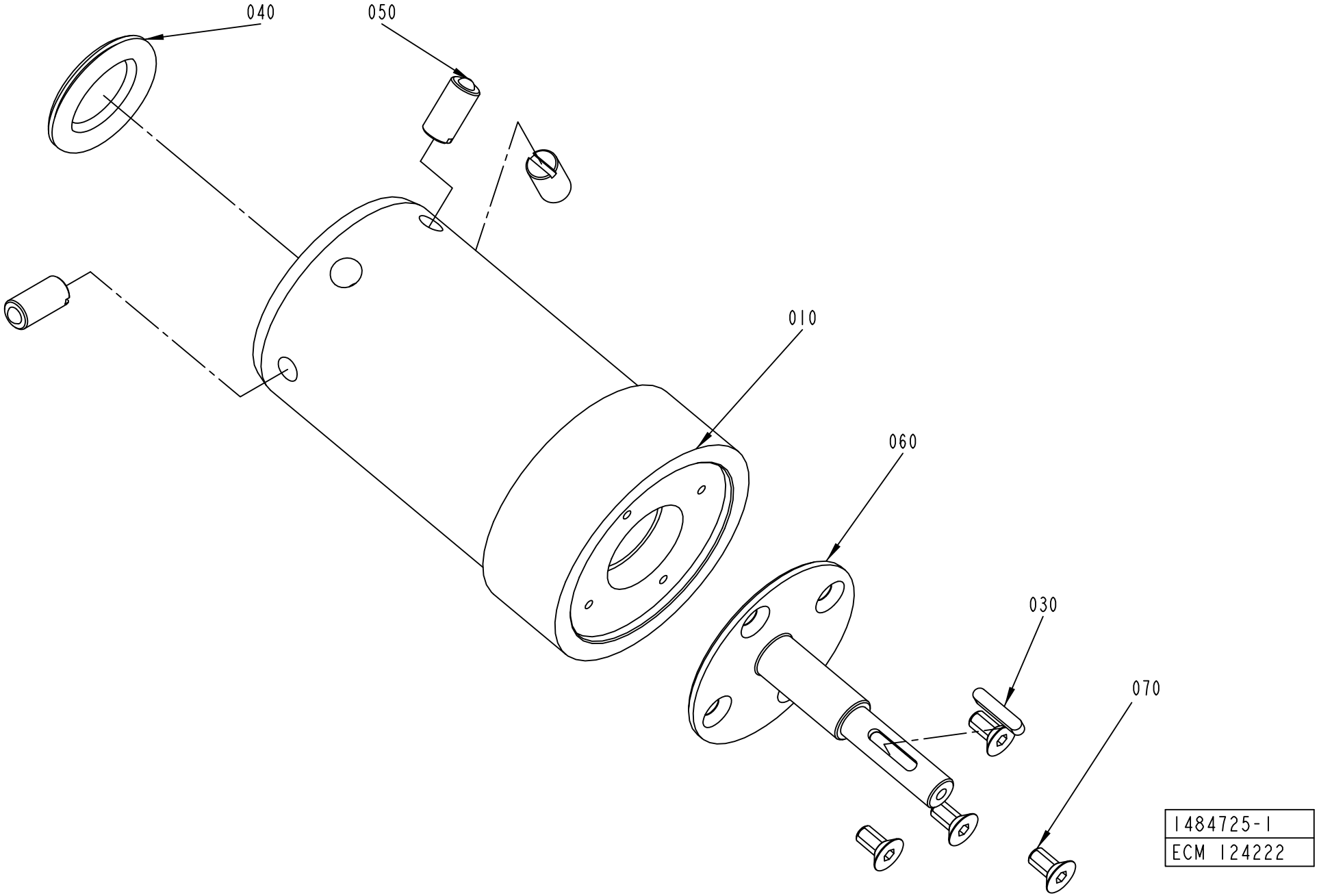
040
050
010
060
030
070
1484725-1
ECM 124222

ECM: 178406 - 20041005
Group number: 1484725-0100
Assembly Drawing: 1484725-1_1_AD

Pos	Part No	UN	Qty	Description	Page No
-					
010	1484724-0000		1	HUB	
030	315701-0170		1	PARALLEL KEY W. ROUND ENDS 4X4X20 MM	
040	90261-0049		1	PLUG, BLIND, PLASTIC, NO. SR1750	
050	90287-0106		3	SCREW SPRINGLOAD. SLOTTED HEAD M10X21	
060	1484726-0000		1	SHAFT	
070	312155-0366		4	SCREW DIN 7991 MF6S M6X12 A4 70	

Pos	Part No	UN	Qty	Description	Page No

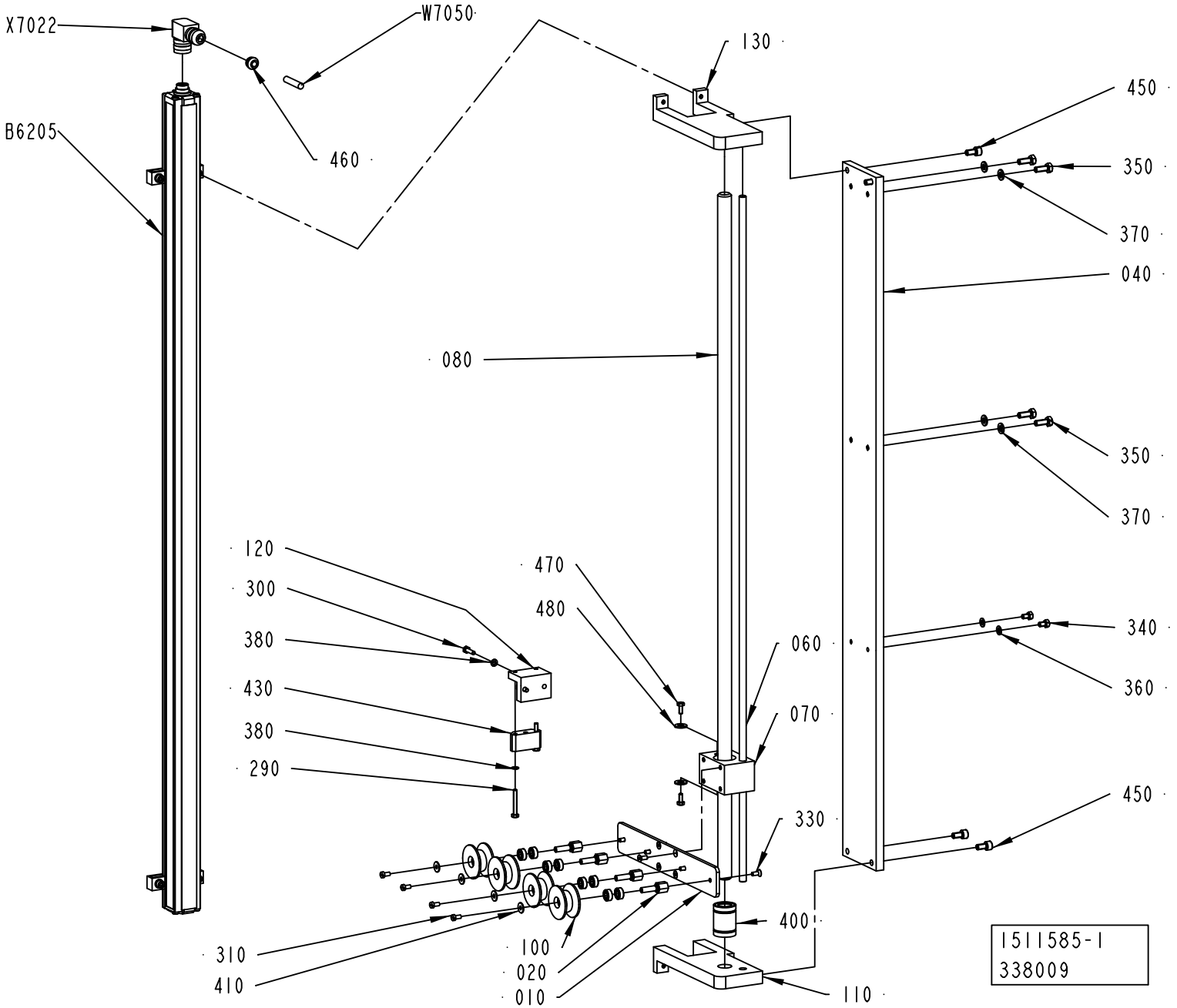
X7022
W7050
B6205
460
130
450
350
370
040
080
350
370
120
300
380
430
380
290
470
480
060
070
340
360
450
330
400
310
410
100
020
010
110
1511585-1
338009

ECM: 383475 - 20090402
Group number: 1511585-0200
Assembly Drawing: 1511585-1_1_AE

Pos	Part No	UN	Qty	Description	Page No
-					
010	1484711-0000		1	BRACKET	
020	1484719-0000		4	AXLE PIN	
040	1498450-0001		1	PLATE	
060	1498451-0001		1	SHAFT	
070	2958800-0000		1	BUSHING	
080	1511586-0001		1	BAR	
100	2831680-0000		4	ROLLER	
110	2501220-0000		1	BRACKET	
120	2501221-0000		1	BRACKET	
130	2501219-0000		1	BRACKET	
290	312105-0299		2	SCREW M6S ISO 4017 M4X30 A470	
300	312105-0293		2	SCREW M6S ISO 4017 M4X16 A470	
310	312125-0287		4	SCREW ISO 1207 M4X8 A4	
330	312155-0289		8	SCREW DIN 7991 MF6S M4X10 A4 70	
340	312105-0323		2	SCREW M6S ISO 4017 M5X8 A480	
350	312105-0368		4	SCREW M6S ISO 4017 M6X16 A480	
360	315105-0146		2	WASHER BRB 5,3X10 RFR	
370	315105-0153		4	WASHER BRB 6,4X12 RFR	
380	315105-0136		4	WASHER BRB 4,3X8 RFR	
400	90189-0011		1	BALL BUSHING, 16X26X36 MM	
410	90005-0082		4	WASHER PLAIN ROUND 4,3(M4)/12,H=1	
430	90458-1592		1	FLOATING MAGNET, BTL5-P-3800-2	
450	312115-0366		4	SCREW ISO4762 M6X12 A4 80	
460	90459-1501		1	CABLE SEALING, 12023/I, ELFA. 44-625-78	
470	312105-0289		2	SCREW M6S H4X10 A4 70 ISO4017/DIN933	
480	315103-0156		2	WASHER PLAIN, BRB 6,7/14,H=1,5 NI PL BR	
B6205	90458-1535		1	TRANSDUCER, BTL5-A11-M0850-P-S32	
W7050	90220-0092	MM	4000	PAIR TWISTED CABLE 3X2X0,25MM2	
X7022	90458-1595		1	CONNECTION, BKS-S 33M-00	

Pos	Part No	UN	Qty	Description	Page No

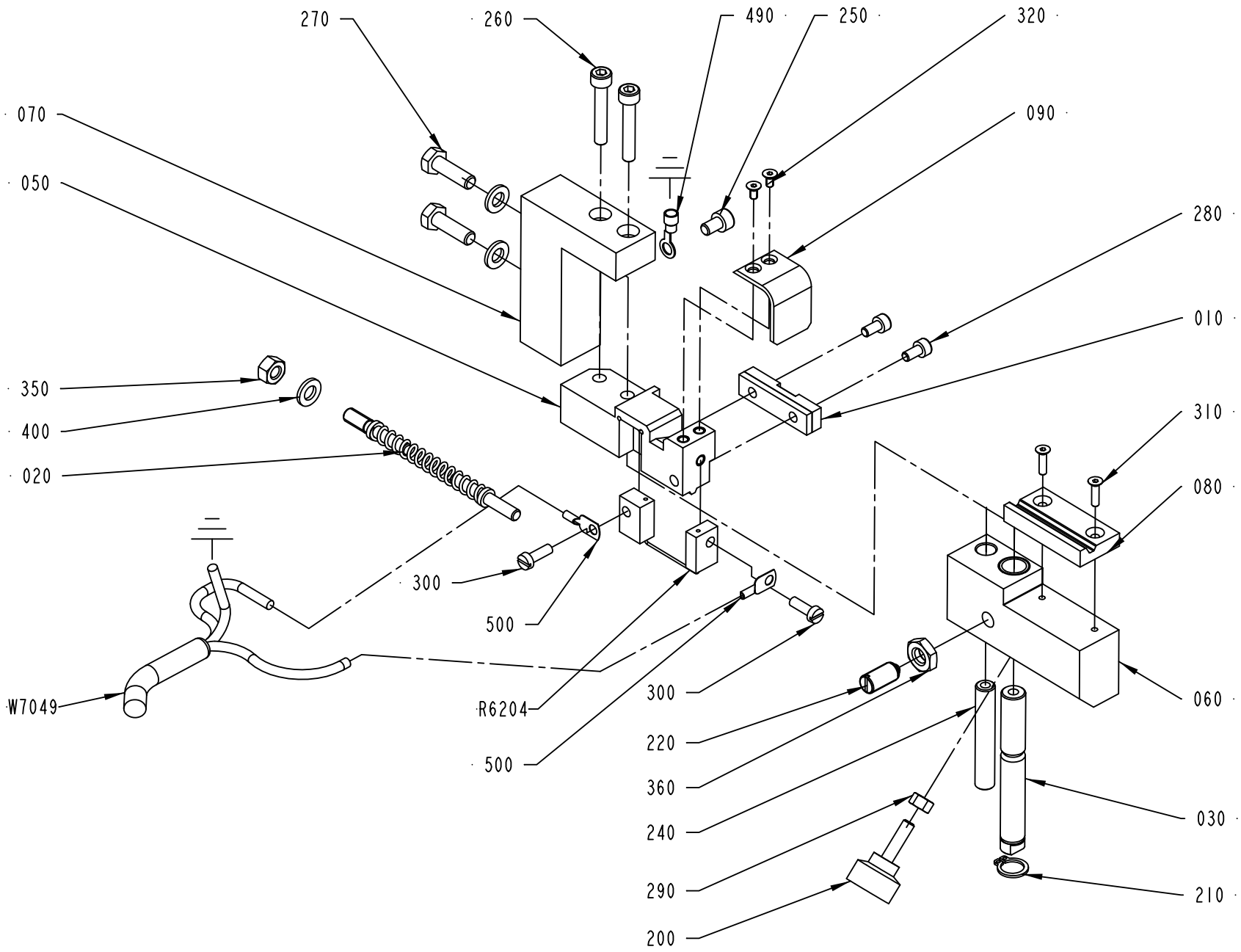

1524477-2
ECM 118596

ECM: 354669 - 20080704
Group number: 1524477-0200
Assembly Drawing: 1524477-2_1_AB

Pos	Part No	UN	Qty	Description	Page No
-					
010	1349014-0000		1	PAD	
020	1538194-0000		1	FINGER	
030	1517751-0000		1	SHAFT	
050	2523598-0000		1	SPLICING TABLE	
060	2523597-0000		1	SLIDER	
070	2531493-0000		1	BRACKET	
080	2523601-0000		1	PAD	
090	2579838-0000		1	TOUCH GUARD	
200	90051-0035		1	KNOB, EXTERNAL THREAD. NO. 8308-1135	
210	90141-0016		1	RETAINING RING FOR SHAFT DIN 471 10 SS	
220	90287-0112		1	SCREW SPRINGLOAD. SLOTTED HEAD M8X16	
240	2523600-0000		1	PIN	
250	312115-0323		1	SCREW ISO4762 M5X8 A4 80	
260	312115-0335		2	SCREW ISO4762 M5X30 A4 80	
270	312105-0370		2	SCREW M6S ISO 4017 M6X20 A480	
280	312115-0287		2	SCREW ISO4762 M4X8 A4 80	
290	312605-0314		1	HEXAGON NUT, M6M M5 A280	
300	312125-0291		2	SCREW ISO 1207 M4X12 A4	
310	312155-0226		2	SCREW DIN 7991 MF6S M3X12 A4 70	
320	312155-0220		2	SCREW DIN 7991 MF6S M3X6 A4 70	
350	312605-0316		1	HEXAGON NUT, M6M M6 A280	
360	312625-0318		1	HEXAGON THIN NUT, EN 24035 ML6M M8 A4	
400	315105-0153		3	WASHER BRB 6,4X12 RFR	
490	353101-0132		1	CABLE SHOE 1,5-2,5MM2 M5 BLUE	
500	353104-0130		2	CABLE SHOE, RING UNINS., YAV 025 M 4	
R6204	1524481-0000		1	SEALING BLOCK	
W7049	351120-0145	MM	4000	CABLE SILFLEX SIHF 3X2,5 0046020	

Pos	Part No	UN	Qty	Description	Page No

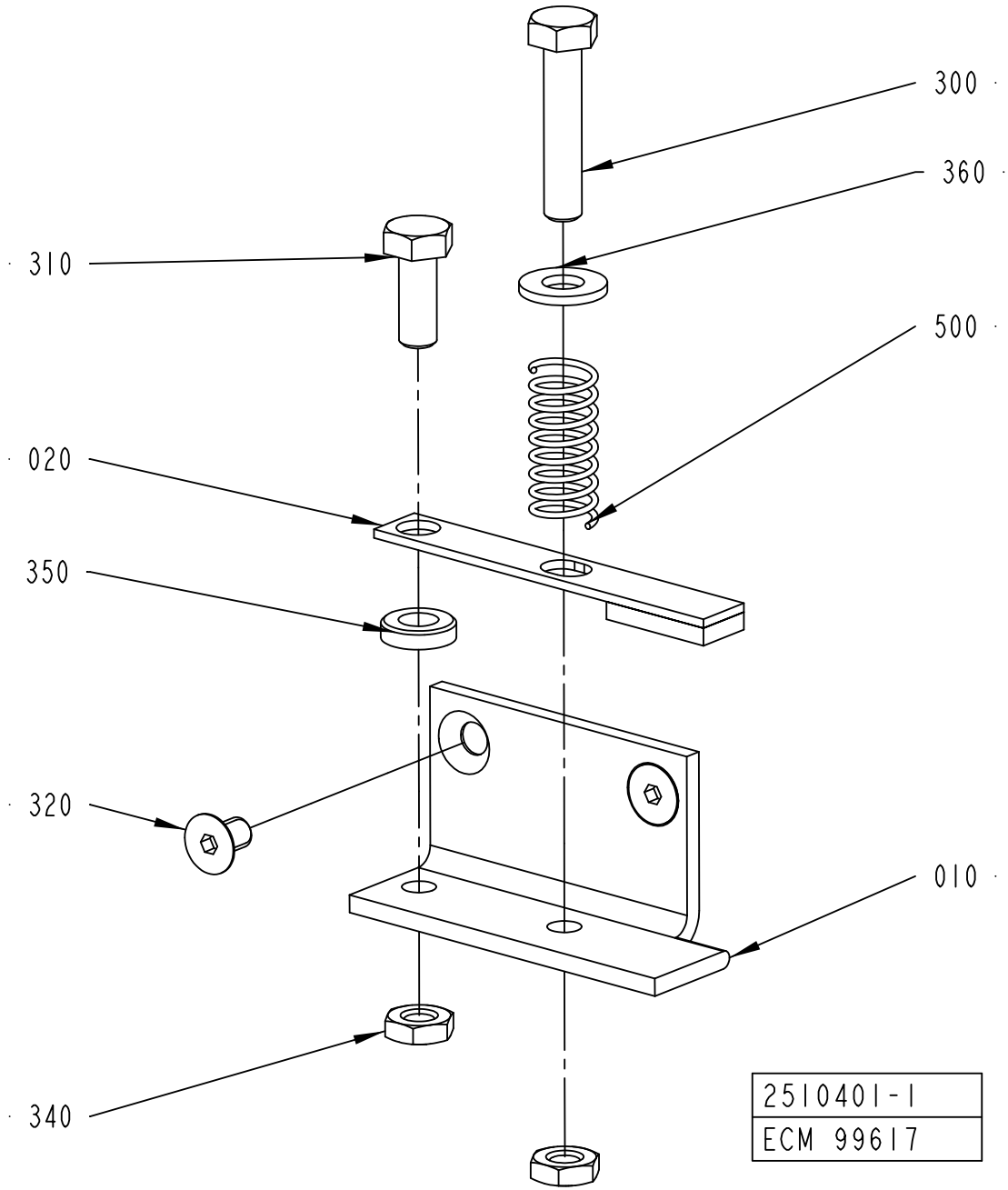
300
360
310
500
020
350
320
010
340
2510401-1
ECM 99617

ECM: 178408 - 20041005
Group number: 2510401-0100
Assembly Drawing: 2510401-1_1_AA

Pos	Part No	UN	Qty	Description	Page No
-					
010	2510399-0000		1	BRACKET	
020	2510400-0000		1	HOLDER	
300	312109-0374		1	SCREW M6S ISO 4017 M6X30 A480	
310	312105-0368		1	SCREW M6S ISO 4017 M6X16 A480	
320	312155-0323		2	SCREW DIN 7991 MF6S M5X8 A4 70	
340	312625-0316		2	HEXAGON THIN NUT, EN 24035 ML6M M6 A4	
350	315115-0153		1	WASHER PLAIN, TBRB 6,4/12 H=3	
360	315105-0156		1	WASHER BRB 6,7X14 RFR	
500	90335-0025		1	COMP. SPRING 22010, 1X11X26	

Pos	Part No	UN	Qty	Description	Page No

SPLICING DEVICE

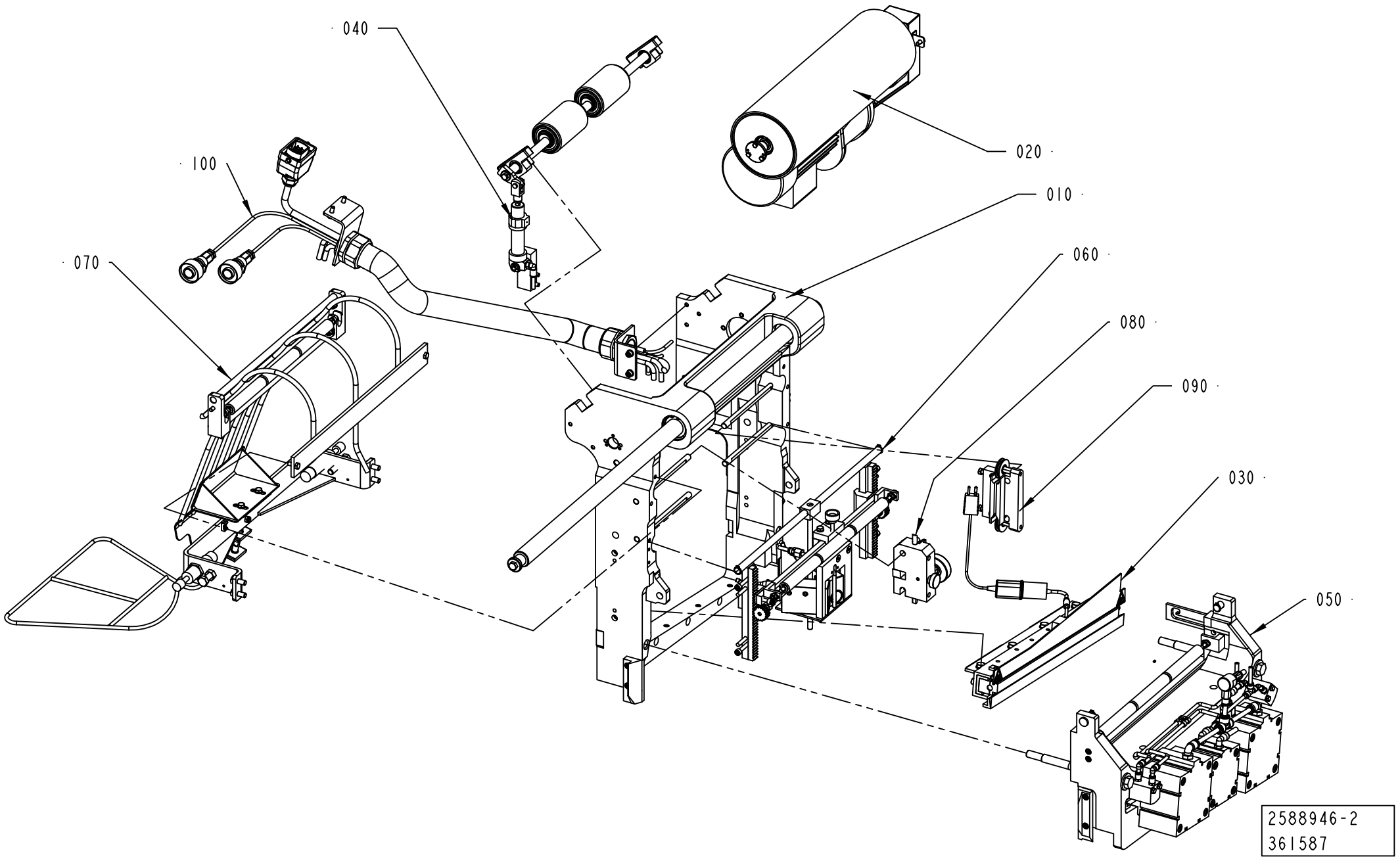

Pos	Part No	UN	Qty	Description	Page No
A3/FLEX TBA 0500B, A3/FLEX TBA 1000B, A3/FLEX TBA 1000S, A3/FLEX TBA 1000SQ, A3/FLEX TPA 1000SQ, A3/FLEX TBA 0200S, A3/FLEX TBA 1500S, A3/FLEX TBA 0200B, A3/FLEX TBA 0250B, A3/FLEX TBA 0330S, A3/FLEX TPA 0330SQ, A3/FLEX TPA 0500SQ, A3/FLEX TBA 0200M, A3/FLEX TBA 0250S, A3/FLEX TBA 0500S, A3/FLEX TPA 0250SQ, A3/FLEX TPA 0200SQ, A3/FLEX TPA 0750SQ, A3/FLEX TBA 0200SQ, A3/FLEX TBA 0250SQ, A3/FLEX TBA 0500SQ, A3/FLEX TGA 1000SQ, A3/FLEX TGA 0500SQ, A3/FLEX TGA 0750SQ (See drawing on page: 8-150)					
040	2524600-0200		1	PRESSURE ROLLER	**8-153**
080	1484745-0100		1	WEB GUIDE	**8-155**
A3/FLEX TBA 1890S, A3/FLEX TBA 2000S, A3/FLEX TBA 1400B (See drawing on page: 8-148)					
040	2524600-0100		1	PRESSURE ROLLER	**8-157, 8-159**
080	1484745-0100		1	WEB GUIDE	**8-155**
Common Parts					
010	2589104-0100		1	FRAME	**8-161**
020	2589105-0100		1	DRIVE UNIT	**8-163**
030	2589106-0100		1	HEATING UNIT	**8-165**
050	2592567-0100		1	PRESSURE JAW	**8-167**
060	2592568-0100		1	BAR CODE READER	**8-169**
070	2582003-0100		1	GUIDE RAIL	**8-171, 8-173**
090	2529547-0100		1	PAPER GUIDE	**8-175**
100	1499578-0300		1	CABLE CONDUIT	**8-177**

Pos	Part No	UN	Qty	Description	Page No

SPLICING DEVICE

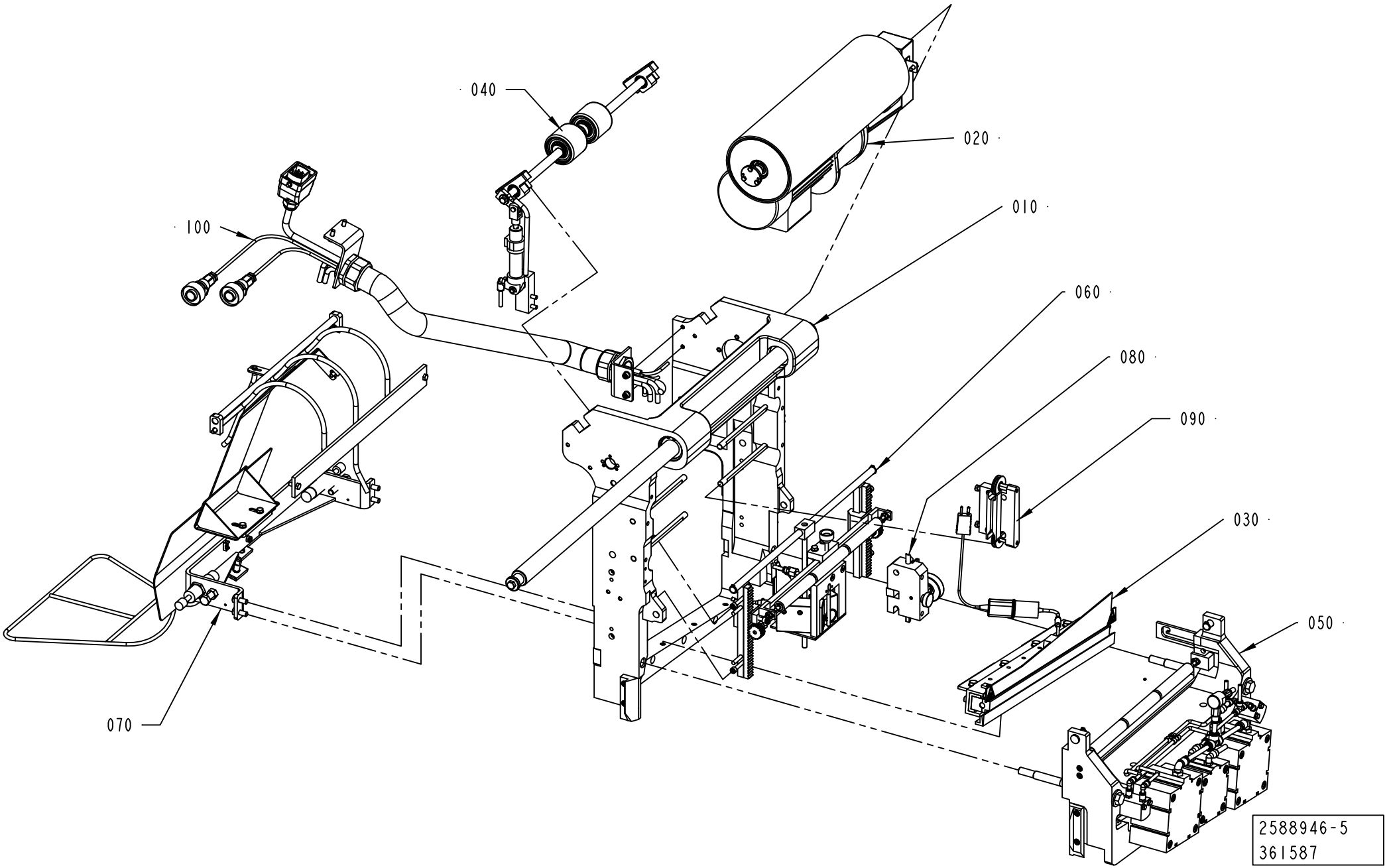

ECM: 361598 - 20081001
Group number: 2588946-0100
Assembly Drawing: 2588946-5_1_AB

This list covers pages from 8-148 to 8-151

Pos	Part No	UN	Qty	Description	Page No
A3/FLEX TBA 0500B, A3/FLEX TBA 1000B, A3/FLEX TBA 1000S, A3/FLEX TBA 1000SQ, A3/FLEX TPA 1000SQ, A3/FLEX TBA 0200S, A3/FLEX TBA 1500S, A3/FLEX TBA 0200B, A3/FLEX TBA 0250B, A3/FLEX TBA 0330S, A3/FLEX TPA 0330SQ, A3/FLEX TPA 0500SQ, A3/FLEX TBA 0200M, A3/FLEX TBA 0250S, A3/FLEX TBA 0500S, A3/FLEX TPA 0250SQ, A3/FLEX TPA 0200SQ, A3/FLEX TPA 0750SQ, A3/FLEX TBA 0200SQ, A3/FLEX TBA 0250SQ, A3/FLEX TBA 0500SQ, A3/FLEX TGA 1000SQ, A3/FLEX TGA 0500SQ, A3/FLEX TGA 0750SQ (See drawing on page: 8-150)					
040	2524600-0200		1	PRESSURE ROLLER	**8-153**
080	1484745-0100		1	WEB GUIDE	**8-155**
A3/FLEX TBA 1890S, A3/FLEX TBA 2000S, A3/FLEX TBA 1400B (See drawing on page: 8-148)					
040	2524600-0100		1	PRESSURE ROLLER	**8-157, 8-159**
080	1484745-0100		1	WEB GUIDE	**8-155**
Common Parts					
010	2589104-0100		1	FRAME	**8-161**
020	2589105-0100		1	DRIVE UNIT	**8-163**
030	2589106-0100		1	HEATING UNIT	**8-165**
050	2592567-0100		1	PRESSURE JAW	**8-167**
060	2592568-0100		1	BAR CODE READER	**8-169**
070	2582003-0100		1	GUIDE RAIL	**8-171, 8-173**
090	2529547-0100		1	PAPER GUIDE	**8-175**
100	1499578-0300		1	CABLE CONDUIT	**8-177**

Pos	Part No	UN	Qty	Description	Page No

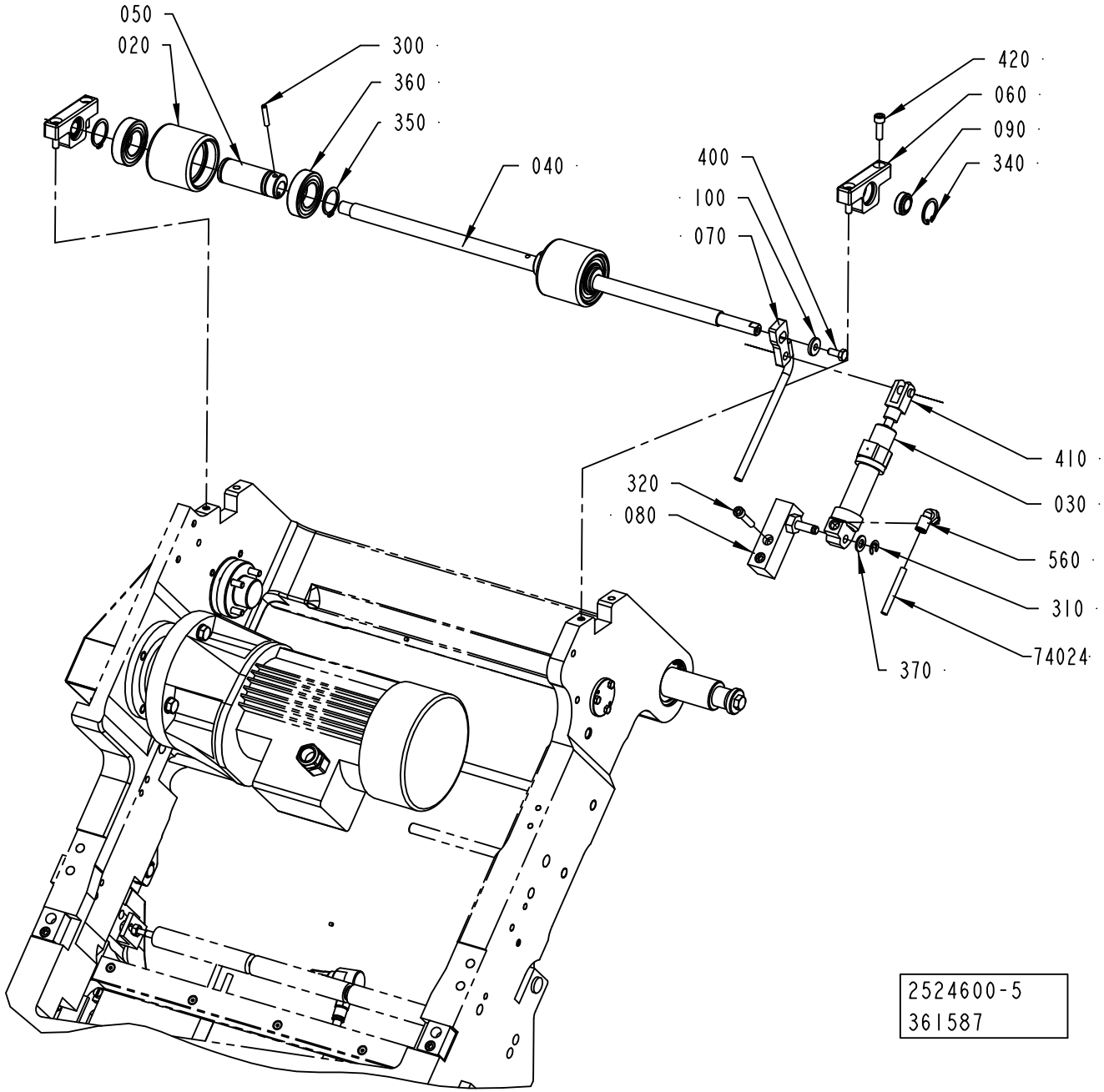
050
020
300
360
350
040
400
100
070
420
060
090
340
410
030
320
080
560
310
74024
370
2524600-5
361587

ECM: 383467 - 20090402
Group number: 2524600-0200
Assembly Drawing: 2524600-5_1_AA

Pos	Part No	UN	Qty	Description	Page No
-					
020	2912330-0000		2	ROLLER	
030	90450-0003		1	SINGLE ACTING, MINI-ISO, CYL 20-25	
040	2912331-0000		1	SHAFT	
050	2916859-0000		2	ECCENTRIC BUSHING	
060	2870090-0000		2	BEARING HOUSING	
070	2871045-0000		1	ROCKER ARM	
080	2703096-0000		1	SUPPORT	
090	90240-0152		2	PLAIN BEAR,SELF ADJ.SPHER.12X22X10 MM	
100	315125-0153		1	WASHER TBRSB 6,4X22X4 A4	
300	311112-0258		2	SPRING PIN, ISO 8752 4X24-C	
310	315755-0109		1	RETAINING RING SHAFT DIN 6799 7 A2	
320	312115-0374		2	SCREW ISO4762 M6X30 A4 80	
340	315753-0119		2	RETAINING RING FOR BORE DIN 472 25 A2	
350	315751-0119		4	RETAINING RING FOR SHAFT DIN 471 25 SS	
360	321308-0205		4	BALL BEARING, 25X47X12MM	
370	315105-0165		1	WASHER BRB 8,4X16 RFR	
410	90459-2590		1	ROD END, CLEVIS WITH AXLE M8	
420	312115-0370		4	SCREW ISO4762 M6X20 A4 80	
560	350002-0006		1	PUSH-IN L-FITTING QSL-F-G1/8-6	
74024	90166-0117	M	7	HOSE 4/6 PVC BLUE	

Pos	Part No	UN	Qty	Description	Page No

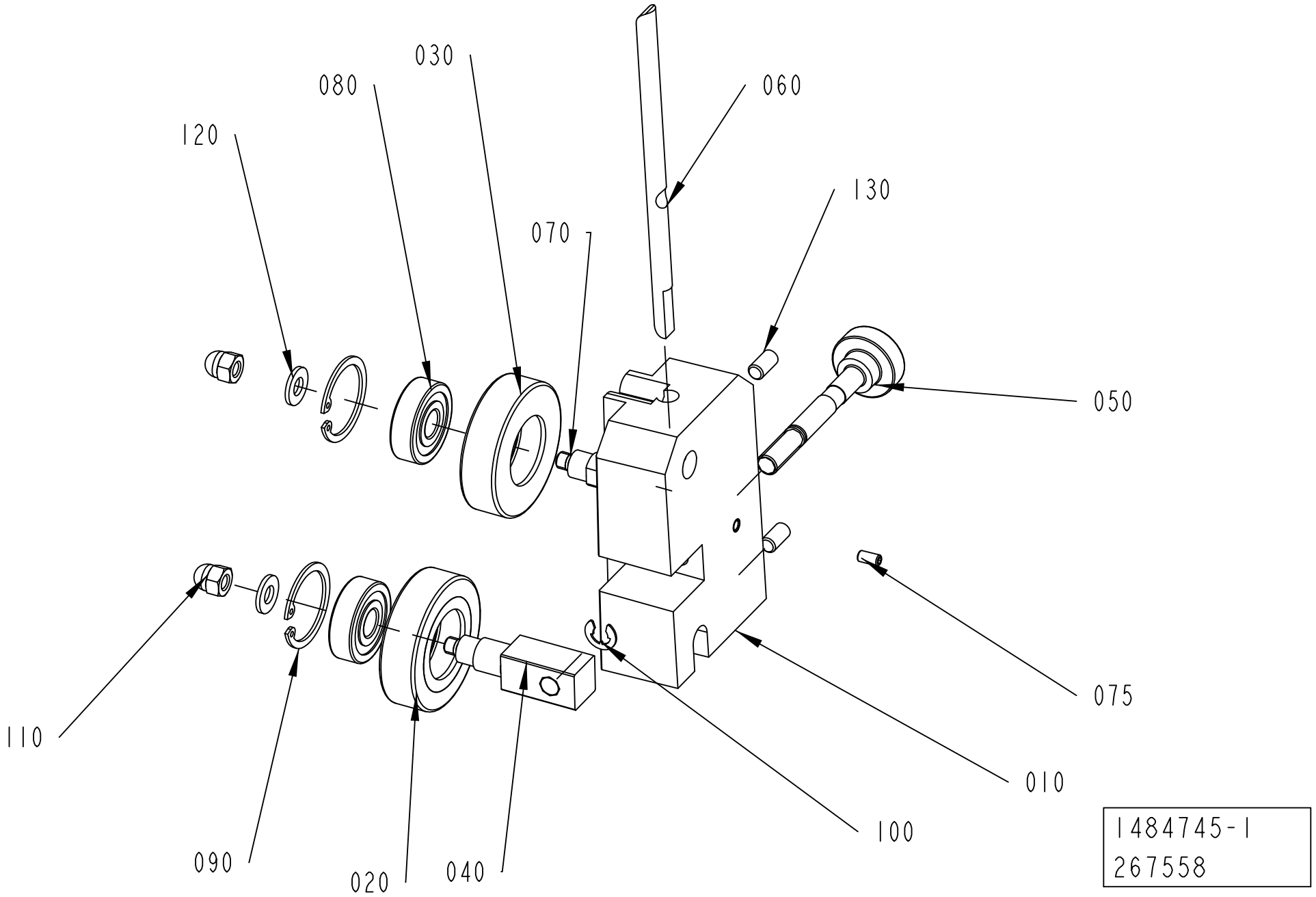
030
080
120
060
130
070
050
075
110
010
100
090
020
040
1484745-1
267558

ECM: 383478 - 20090402
Group number: 1484745-0100
Assembly Drawing: 1484745-1_1_AE

Pos	Part No	UN	Qty	Description	Page No
A3/FLEX TBA 1890S, A3/FLEX TBA 2000S, A3/FLEX TBA 1400B					
010	2831676-0000		1	BRACKET	
A3/FLEX TBA 0500B, A3/FLEX TBA 1000B, A3/FLEX TBA 1000S, A3/FLEX TBA 1000SQ, A3/FLEX TPA 1000SQ, A3/FLEX TBA 0200S, A3/FLEX TBA 1500S, A3/FLEX TBA 0200B, A3/FLEX TBA 0250B, A3/FLEX TBA 0330S, A3/FLEX TPA 0330SQ, A3/FLEX TPA 0500SQ, A3/FLEX TBA 0200M, A3/FLEX TBA 0250S, A3/FLEX TBA 0500S, A3/FLEX TPA 0250SQ, A3/FLEX TPA 0200SQ, A3/FLEX TPA 0750SQ, A3/FLEX TBA 0200SQ, A3/FLEX TBA 0250SQ, A3/FLEX TBA 0500SQ, A3/FLEX TGA 1000SQ, A3/COMPACTFLEX, A3/FLEX TGA 0500SQ, A3/FLEX TGA 0750SQ					
010	2831675-0000		1	BRACKET	
Common Parts					
020	1036623-0000		1	GUIDE ROLLER	
030	1036622-0000		1	GUIDE ROLLER	
040	1317711-0000		1	SHAFT	
050	1317712-0000		1	SHAFT	
060	1512526-0000		1	STEERING	
070	583727-0000		1	SHAFT	
075	312318-0287		1	SCREW ISO4029 M4X8 A4	
080	321313-0100		2	BALL BEARING, 10X30X9 MM	
090	315753-0122		2	RETAINING RING FOR BORE DIN 472 30 A2	
100	315755-0108		1	RETAINING RING SHAFT DIN 6799 6 A2	
110	312705-0316		2	NUT HEX. DOMED CAP MHM-6 M6 A280	
120	315105-0156		2	WASHER BRB 6,7X14 RFR	
130	312318-0366		2	SCREW ISO4029 M6X12 A4	

Pos	Part No	UN	Qty	Description	Page No

PRESSURE ROLLER

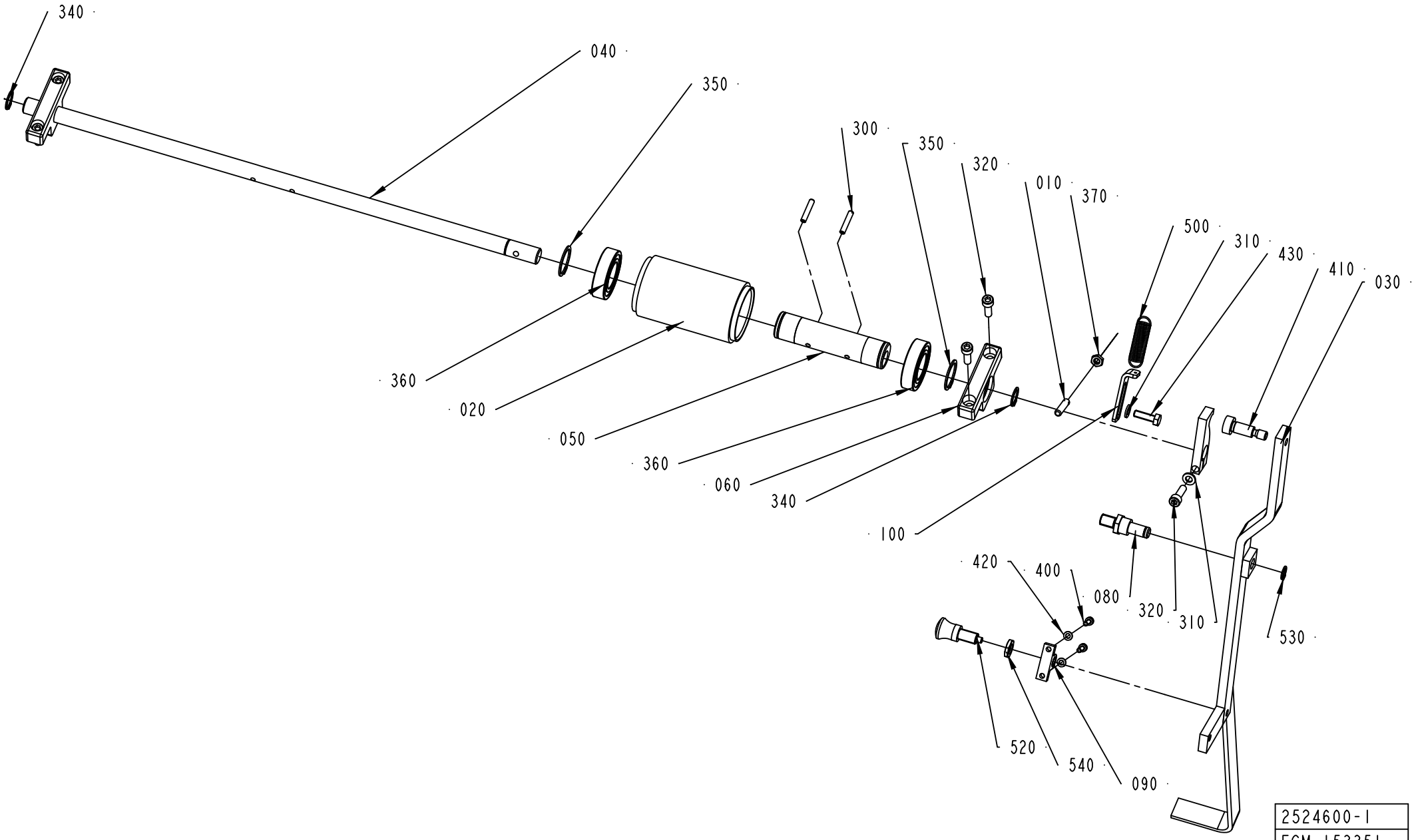

ECM: 383468 - 20090402
Group number: 2524600-0100
Assembly Drawing: 2524600-1_1_AB

This list covers pages from 8-156 to 8-159

Pos	Part No	UN	Qty	Description	Page No
A3/FLEX TBA 1890S, A3/FLEX TBA 2000S, A3/FLEX TBA 1400B (See drawing on page: 8-158)					
020	906254-0000		2	ROLLER	
030	90450-0003		1	SINGLE ACTING, MINI-ISO, CYL 20-25	
040	2681261-0000		1	SHAFT	
050	1512267-0000		2	ECCENTRIC BUSHING	
060	2681262-0000		2	BRACKET	
070	2703095-0000		1	ROCKER ARM	
080	2703096-0000		1	SUPPORT	
090	2681263-0000		2	BUSHING	
100	2681266-0000		1	WASHER	
300	311112-0258		4	SPRING PIN, ISO 8752 4X24-C	
310	315755-0109		1	RETAINING RING SHAFT DIN 6799 7 A2	
320	312115-0374		2	SCREW ISO4762 M6X30 A4 80	
350	315751-0119		4	RETAINING RING FOR SHAFT DIN 471 25 SS	
360	321308-0205		4	BALL BEARING, 25X47X12MM	
370	315105-0165		1	WASHER BRB 8,4X16 RFR	
400	312105-0367		1	SCREW M6S ISO 4017 M6X14 A480	
410	90459-2590		1	ROD END, CLEVIS WITH AXLE M8	
420	312115-0370		4	SCREW ISO4762 M6X20 A4 80	
450	90166-0117	M	7	HOSE 4/6 PVC BLUE	
560	350002-0006		1	PUSH-IN L-FITTING QSL-F-G1/8-6	
A3/FLEX TBA 0500B, A3/FLEX TBA 1000B, A3/FLEX TBA 1000S, A3/FLEX TBA 1000SQ, A3/FLEX TPA 1000SQ, A3/FLEX TBA 0200S, A3/FLEX TBA 1500S, A3/FLEX TBA 0200B, A3/FLEX TBA 0250B, A3/FLEX TBA 0330S, A3/FLEX TPA 0330SQ, A3/FLEX TPA 0500SQ, A3/FLEX TBA 0200M, A3/FLEX TBA 0250S, A3/FLEX TBA 0500S, A3/FLEX TPA 0250SQ, A3/FLEX TPA 0200SQ, A3/FLEX TPA 0750SQ, A3/FLEX TBA 0200SQ, A3/FLEX TBA 0250SQ, A3/FLEX TBA 0500SQ, A3/FLEX TGA 1000SQ, A3/FLEX TGA 0500SQ, A3/FLEX TGA 0750SQ (See drawing on page: 8-156)					
010	578684-0000		1	SPRING BRACKET	
020	906254-0000		1	ROLLER	
030	2524602-0000		1	HANDLE	
040	1487763-0000		1	SHAFT	
050	1512267-0000		1	ECCENTRIC BUSHING	
060	1519583-0000		2	BRACKET	
070	2524604-0000		1	ROCKER ARM	
080	2524601-0000		1	AXLE PIN	
090	2524603-0000		1	HOLDER	
100	2529549-0000		1	PLATE	
300	311112-0258		2	SPRING PIN, ISO 8752 4X24-C	
310	315105-0153		2	WASHER BRB 6,4X12 RFR	
320	312115-0370		5	SCREW ISO4762 M6X20 A4 80	
350	315751-0119		2	RETAINING RING FOR SHAFT DIN 471 25 SS	
360	321308-0205		2	BALL BEARING, 25X47X12MM	
370	312625-0316		1	HEXAGON THIN NUT, EN 24035 ML6M M6 A4	
400	312115-0291		2	SCREW ISO4762 M4X12 A4 80	
410	312180-0491		1	SCREW ISO7379 H10X20	
420	315105-0136		2	WASHER BRB 4,3X8 RFR	
430	312105-0370		1	SCREW M6S ISO 4017 M6X20 A480	
500	90335-0091		1	TENSION SPRING 41890, 1,2X13X48,2	
520	90051-0087		1	LOCK KNOB, NO. GN 617 A5	
530	90141-0016		1	RETAINING RING FOR SHAFT DIN 471 10 SS	
540	90099-0007		1	HEXAGON NUT, M10X1, E 63 137 10	
Common Parts					
340	315751-0112		2	RETAINING RING FOR SHAFT DIN 471 15 SS	

Machine Type	Group Description	Used-In	Group Number	Page No

PRESSURE ROLLER

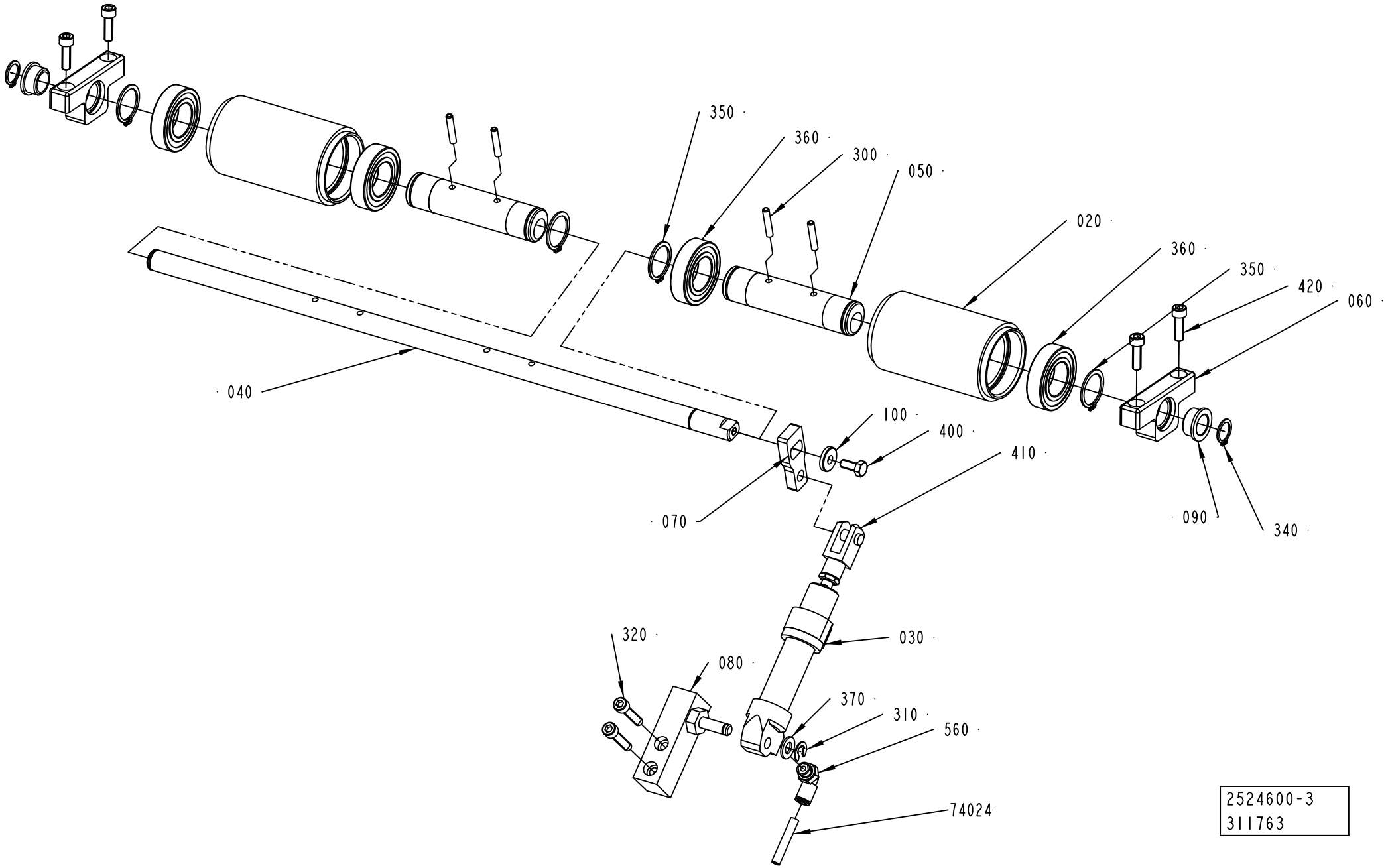

ECM: 383468 - 20090402
Group number: 2524600-0100
Assembly Drawing: 2524600-3_1_AE

This list covers pages from 8-156 to 8-159

Pos	Part No	UN	Qty	Description	Page No
A3/FLEX TBA 1890S, A3/FLEX TBA 2000S, A3/FLEX TBA 1400B (See drawing on page: 8-158)					
020	906254-0000		2	ROLLER	
030	90450-0003		1	SINGLE ACTING, MINI-ISO, CYL 20-25	
040	2681261-0000		1	SHAFT	
050	1512267-0000		2	ECCENTRIC BUSHING	
060	2681262-0000		2	BRACKET	
070	2703095-0000		1	ROCKER ARM	
080	2703096-0000		1	SUPPORT	
090	2681263-0000		2	BUSHING	
100	2681266-0000		1	WASHER	
300	311112-0258		4	SPRING PIN, ISO 8752 4X24-C	
310	315755-0109		1	RETAINING RING SHAFT DIN 6799 7 A2	
320	312115-0374		2	SCREW ISO4762 M6X30 A4 80	
350	315751-0119		4	RETAINING RING FOR SHAFT DIN 471 25 SS	
360	321308-0205		4	BALL BEARING, 25X47X12MM	
370	315105-0165		1	WASHER BRB 8,4X16 RFR	
400	312105-0367		1	SCREW M6S ISO 4017 M6X14 A480	
410	90459-2590		1	ROD END, CLEVIS WITH AXLE M8	
420	312115-0370		4	SCREW ISO4762 M6X20 A4 80	
450	90166-0117	M	7	HOSE 4/6 PVC BLUE	
560	350002-0006		1	PUSH-IN L-FITTING QSL-F-G1/8-6	
A3/FLEX TBA 0500B, A3/FLEX TBA 1000B, A3/FLEX TBA 1000S, A3/FLEX TBA 1000SQ, A3/FLEX TPA 1000SQ, A3/FLEX TBA 0200S, A3/FLEX TBA 1500S, A3/FLEX TBA 0200B, A3/FLEX TBA 0250B, A3/FLEX TBA 0330S, A3/FLEX TPA 0330SQ, A3/FLEX TPA 0500SQ, A3/FLEX TBA 0200M, A3/FLEX TBA 0250S, A3/FLEX TBA 0500S, A3/FLEX TPA 0250SQ, A3/FLEX TPA 0200SQ, A3/FLEX TPA 0750SQ, A3/FLEX TBA 0200SQ, A3/FLEX TBA 0250SQ, A3/FLEX TBA 0500SQ, A3/FLEX TGA 1000SQ, A3/FLEX TGA 0500SQ, A3/FLEX TGA 0750SQ (See drawing on page: 8-156)					
010	578684-0000		1	SPRING BRACKET	
020	906254-0000		1	ROLLER	
030	2524602-0000		1	HANDLE	
040	1487763-0000		1	SHAFT	
050	1512267-0000		1	ECCENTRIC BUSHING	
060	1519583-0000		2	BRACKET	
070	2524604-0000		1	ROCKER ARM	
080	2524601-0000		1	AXLE PIN	
090	2524603-0000		1	HOLDER	
100	2529549-0000		1	PLATE	
300	311112-0258		2	SPRING PIN, ISO 8752 4X24-C	
310	315105-0153		2	WASHER BRB 6,4X12 RFR	
320	312115-0370		5	SCREW ISO4762 M6X20 A4 80	
350	315751-0119		2	RETAINING RING FOR SHAFT DIN 471 25 SS	
360	321308-0205		2	BALL BEARING, 25X47X12MM	
370	312625-0316		1	HEXAGON THIN NUT, EN 24035 ML6M M6 A4	
400	312115-0291		2	SCREW ISO4762 M4X12 A4 80	
410	312180-0491		1	SCREW ISO7379 H10X20	
420	315105-0136		2	WASHER BRB 4,3X8 RFR	
430	312105-0370		1	SCREW M6S ISO 4017 M6X20 A480	
500	90335-0091		1	TENSION SPRING 41890, 1,2X13X48,2	
520	90051-0087		1	LOCK KNOB, NO. GN 617 A5	
530	90141-0016		1	RETAINING RING FOR SHAFT DIN 471 10 SS	
540	90099-0007		1	HEXAGON NUT, M10X1, E 63 137 10	
Common Parts					
340	315751-0112		2	RETAINING RING FOR SHAFT DIN 471 15 SS	

Machine Type	Group Description	Used-In	Group Number	Page No

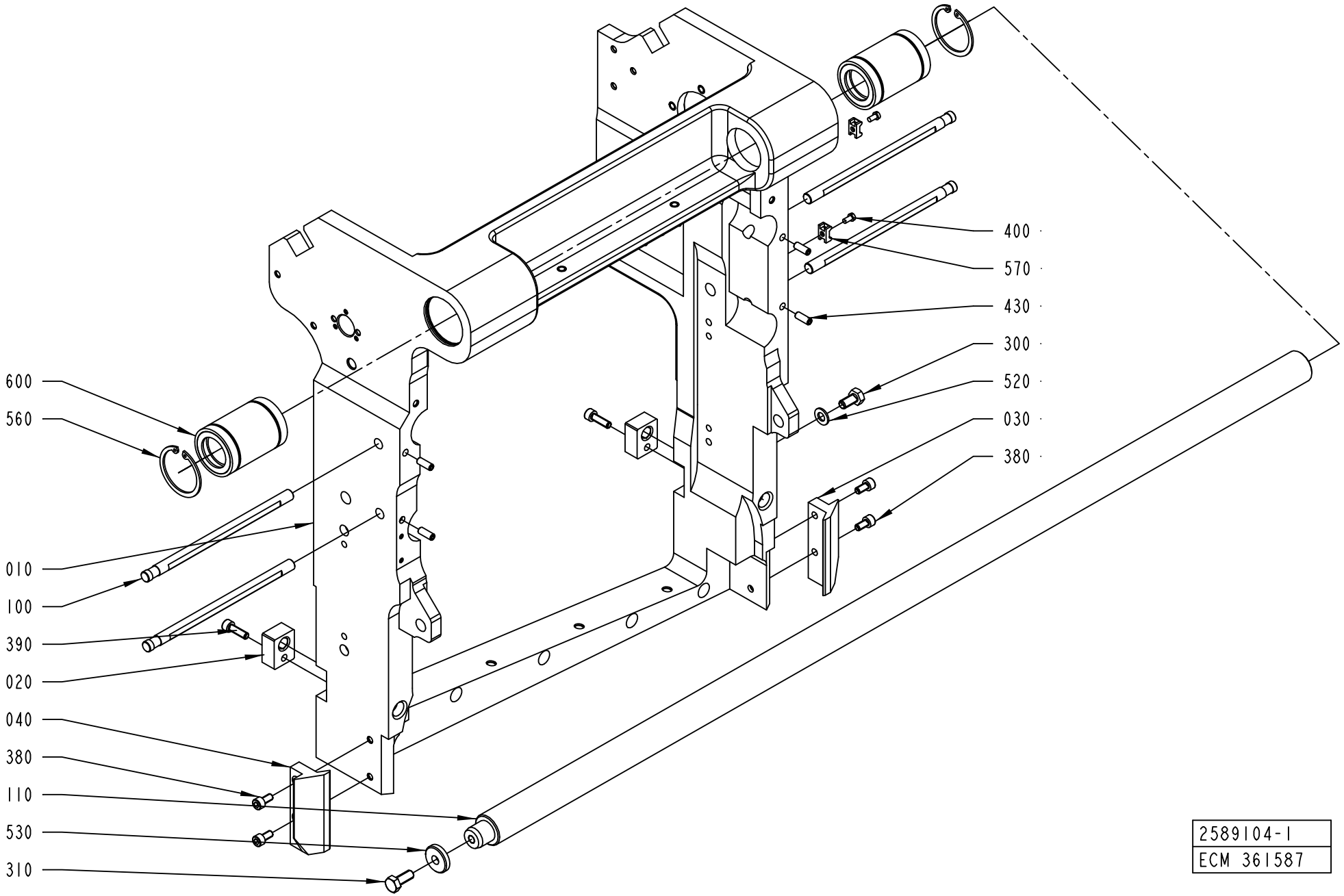

2589104-1
ECM 361587

ECM: 361758 - 20081001
Group number: 2589104-0100
Assembly Drawing: 2589104-1_1_AC

Pos	Part No	UN	Qty	Description	Page No
A3/FLEX					
100	1484704-0000		4	SHAFT	
Common Parts					
010	2574401-0000		1	FRAME	
020	2589119-0000		2	NUT	
030	2562551-0000		1	SLIDE PLANE	
040	2562552-0000		1	BSLIDE PLANE	
110	1490820-0000		1	SHAFT	
300	312105-0449		1	SCREW M6S ISO 4017 M8X16 A480	
310	312105-0451		1	SCREW M6S ISO 4017 M8X20 A480	
380	312115-0366		4	SCREW ISO4762 M6X12 A4 80	
390	312115-0370		2	SCREW ISO4762 M6X20 A4 80	
400	312125-0287		2	SCREW ISO 1207 M4X8 A4	
430	312318-0368		4	SCREW ISO4029 M6X16 A4	
520	315105-0165		1	WASHER BRB 8,4X16 RFR	
530	315125-0165		1	WASHER TBRSB 8,4X26X5 A4	
560	315753-0130		2	RETAINING RING FOR BORE DIN 472 47 A2	
570	352113-0205		2	ANCHOR PLATES FOR STRIPS, TYPE TM2S8-C10	
600	90189-0005		2	BALL BUSHING, 30X47X68 MM	

Pos	Part No	UN	Qty	Description	Page No

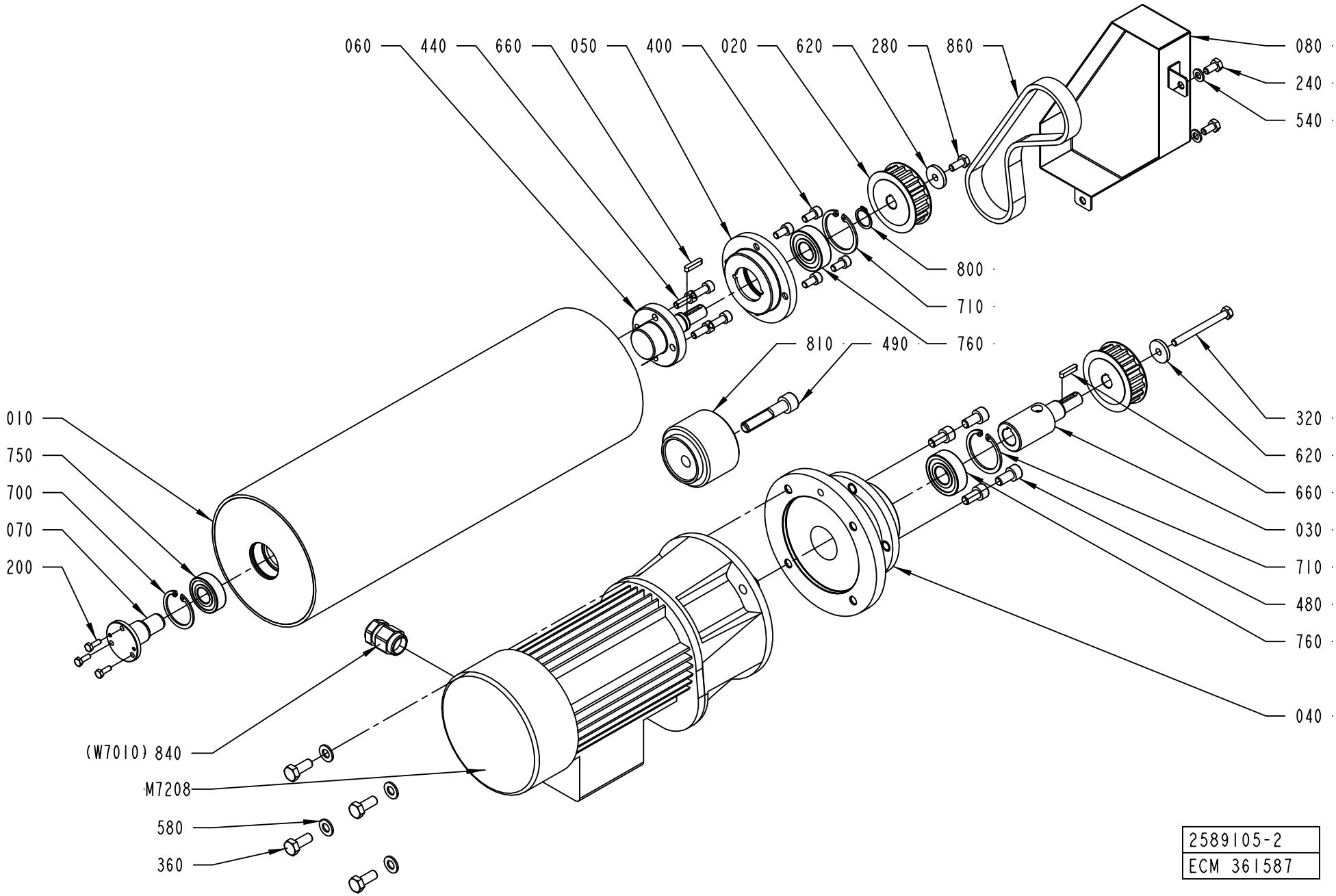
060
440
660
050
400
020
620
280
860
080
240
540
800
710
760
810
490
010
750
700
070
200
320
620
660
030
710
480
760
040
(W7010) 840
M7208
580
360
2589105-2
ECM 361587

ECM: 361599 - 20081001
Group number: 2589105-0100
Assembly Drawing: 2589105-2_1_AB

Pos	Part No	UN	Qty	Description	Page No
A3/FLEX					
010	2665624-0000		1	BENDING ROLLER	
Common Parts					
020	2589109-0000		2	TOOTHED PULLEY	
030	2589110-0000		1	SHAFT	
040	2589111-0000		1	FLANGE	
050	2589112-0000		1	FLANGE	
060	2589113-0000		1	SHAFT	
070	2589114-0000		1	SHAFT	
080	2589115-0000		1	COVER	
200	312105-0291		3	SCREW M6S ISO 4017 M4X12 A470	
240	312105-0366		2	SCREW M6S ISO 4017 M6X12 A480	
280	312105-0367		1	SCREW M6S ISO 4017 M6X14 A480	
320	312105-0383		1	SCREW M6S ISO 4014 M6X65 A480	
360	312105-0451		4	SCREW M6S ISO 4017 M8X20 A480	
400	312115-0366		4	SCREW ISO4762 M6X12 A4 80	
440	312115-0368		4	SCREW ISO4762 M6X16 A4 80	
480	312115-0449		4	SCREW ISO4762 M8X16 A4 80	
490	312115-0501		1	SCREW ISO4762 M10X50 A4 80	
540	315105-0153		2	WASHER BRB 6,4X12 RFR	
580	315105-0165		4	WASHER BRB 8,4X16 RFR	
620	315125-0153		2	WASHER TBRSB 6,4X22X4 A4	
660	315701-0170		2	PARALLEL KEY W. ROUND ENDS 4X4X20 MM	
700	315753-0124		1	RETAINING RING FOR BORE DIN 472 35 A2	
710	315753-0127		2	RETAINING RING FOR BORE DIN 472 40 A2	
750	321313-0102		1	BALL BEARING, 15X35X11 MM	
760	321313-0103		2	BALL BEARING, 17X40X12MM	
800	90141-0017		1	RETAINING RING FOR SHAFT DIN 471 17 SS	
810	90344-0078		1	PULLEY	
840	90458-0438		1	GLAND, EXTENDED WITH INSERT, M20X1,5	
860	90459-2198		1	TIMING BELT T10X480X16 POLYURETHANE	
M7208	90459-2826		1	GEARS, HELICAL MOTOR ME0102210012	

Pos	Part No	UN	Qty	Description	Page No

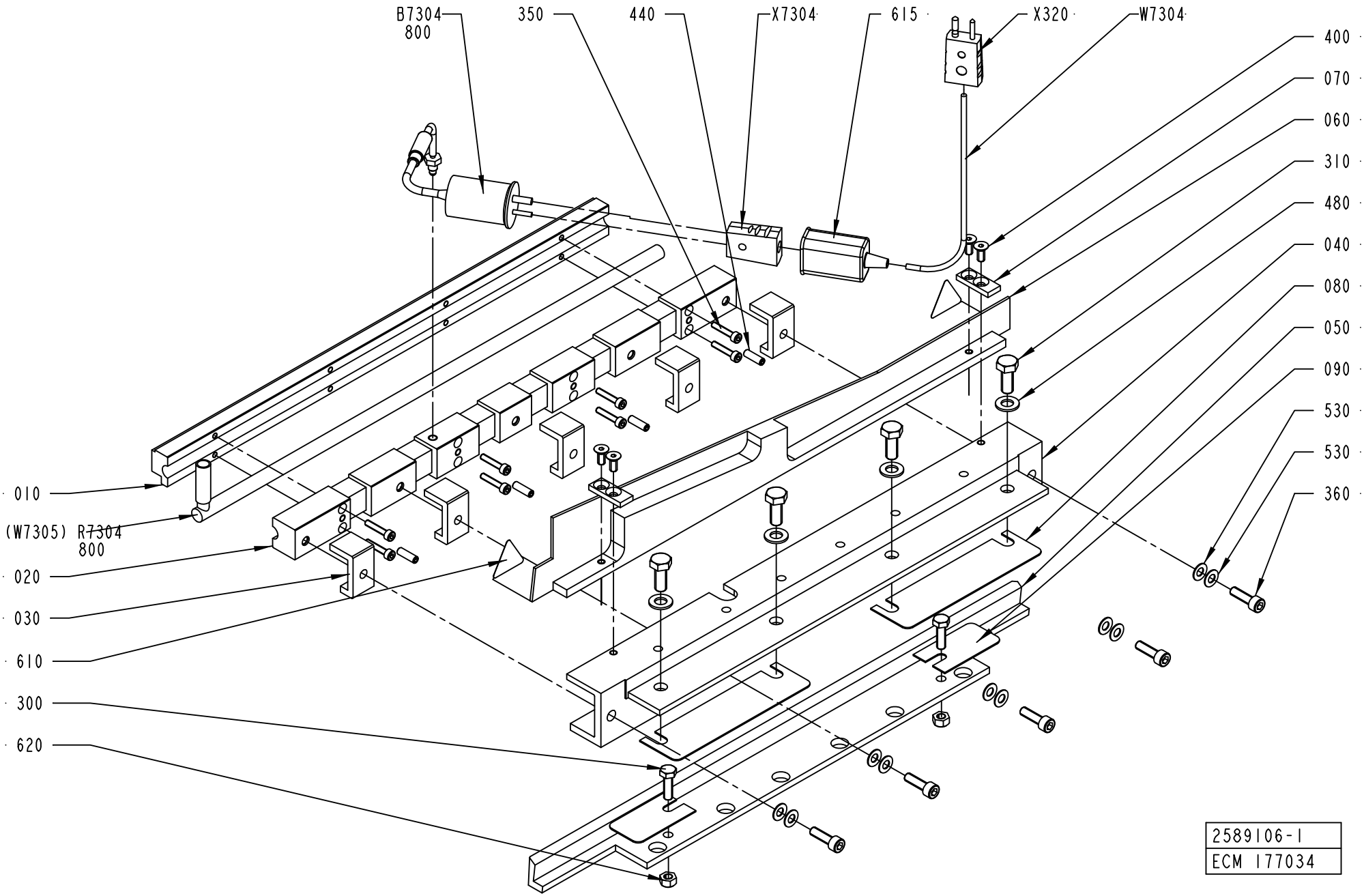
B7304
800
350
440
X7304
615
X320
W7304
400
070
060
310
480
040
080
050
090
530
530
360
010
(W7305) R7304
800
020
030
610
300
620
2589106-1
ECM 177034

ECM: 178410 - 20041025
Group number: 2589106-0100
Assembly Drawing: 2589106-1_1_AD

Pos	Part No	UN	Qty	Description	Page No
A3/FLEX					
X320	90326-0022		1	PLUG, MALE YELLOW CR-AL	
Common Parts					
010	2559986-0000		1	SEALING PLATE	
020	2559987-0000		1	SEALING PLATE	
030	2566127-0000		5	SPACER	
040	2566128-0000		1	HOUSING	
050	2566129-0000		1	ADJUSTMENT ANGLE	
060	2566130-0000		1	PLATE	
070	2576396-0000		2	PLATE	
080	2588947-0000		2	SHIMS	
090	2588948-0000		2	SHIMS	
300	312105-0370		2	SCREW M6S ISO 4017 M6X20 A480	
310	312105-0451		4	SCREW M6S ISO 4017 M8X20 A480	
350	312115-0295		8	SCREW ISO4762 M4X20 A4 80	
360	312115-0370		5	SCREW ISO4762 M6X20 A4 80	
400	312155-0327		4	SCREW DIN 7991 MF6S M5X12 A4 70	
440	312318-0329		4	SCREW ISO4029 M5X16 A4	
480	315105-0165		4	WASHER BRB 8,4X16 RFR	
530	319030-0125		10	DISC SPRING, CONICAL 12,5X6,2X0,5 MM	
610	90194-0143		2	WARNING SIGN ISO, HOT SURFACE	
615	90326-0012		1	PROTECTIVE COVER, T31A4618	
620	90459-2635		2	NUT, HEX.LOCK "CONELOCK" M6 DIN 980V	
800	90296-0051	G	1	PASTE	
B7304	90326-0054		1	THERMOCOUPLE, CR-AL STD.GR, 12826-36	
R7304	90459-2843		1	HEATING CARTRIDGE, 800W 240V	
W7304	90220-0034	MM	9500	THERMOCABLE TEX/SITW-20F-KX 2X0,5MM2	
X7304	90326-0020		1	PLUG, FEMALE YELLOW CR-AL	

Pos	Part No	UN	Qty	Description	Page No

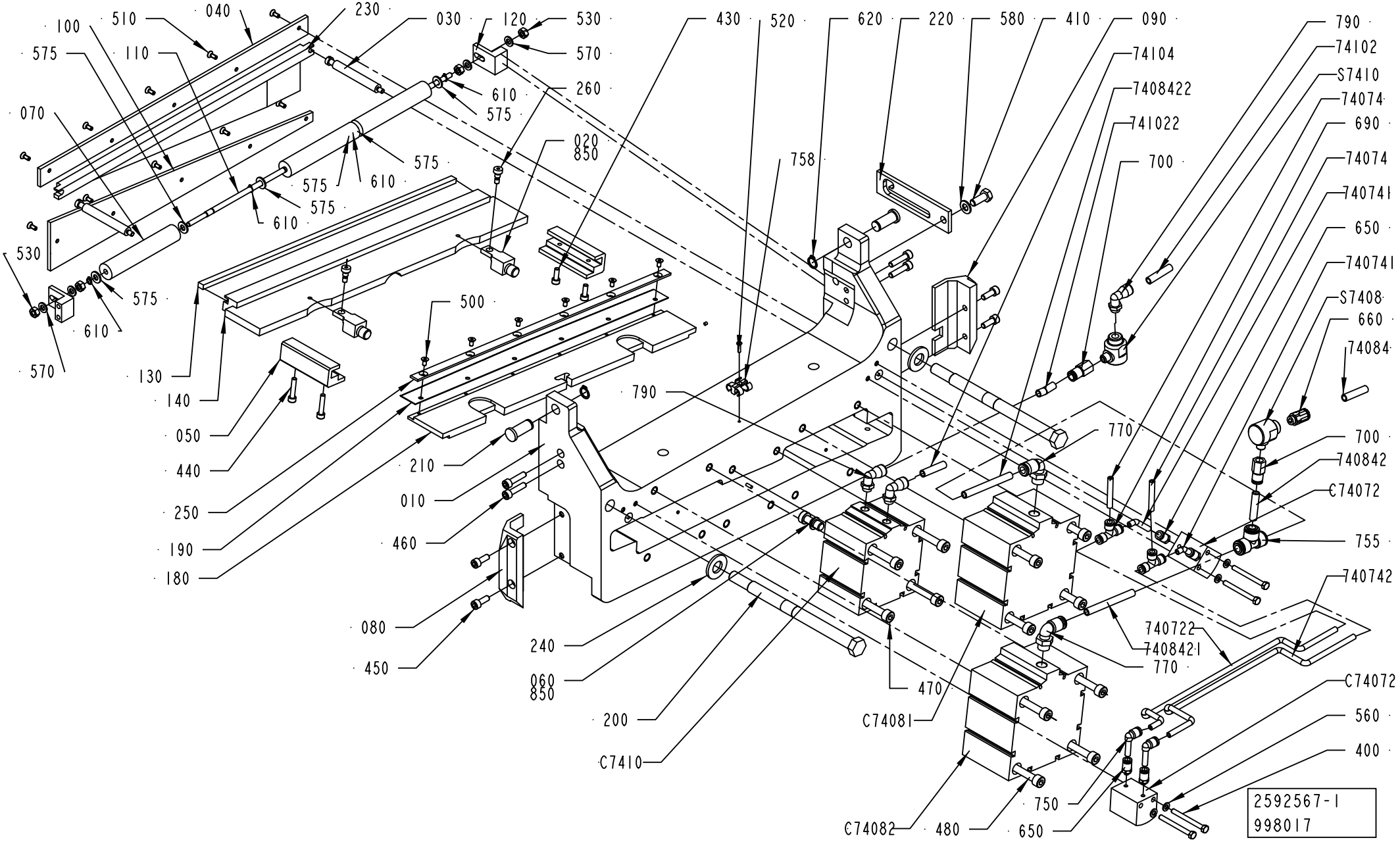
100
510
040
230
030
120
530
575
110
570
260
610
575
070
020
850
575
575
610
575
610
530
575
610
570
130
140
050
440
250
190
180
500
758
430
520
620
220
580
410
090
790
74104
74102
7408422
S7410
741022
74074
700
690
74074
740741
650
740741
S7408
660
74084
790
770
700
740842
C74072
755
740742
740722
740842-1
770
470
C74081
C74072
560
400
750
650
480
C74082
210
010
460
080
450
240
060
850
200
C7410
2592567-1
998017

ECM: 998017 - 20080704
Group number: 2592567-0100
Assembly Drawing: 2592567-1_1_AG

Pos	Part No	UN	Qty	Description	Page No
-					
010	2574402-0000		1	PRESSURE JAW	
020	2549829-0000		2	SPACER	
030	2552798-0000		2	COMPRESSION ROD	
040	2831672-0000		1	SLIDE PLATE	
050	2558148-0000		2	SLIDING STRIP	
060	2559439-0000		1	COUPLING BOLT	
070	2831674-0000		3	ROLLER	
080	2566123-0000		1	SLIDE PLANE	
090	2566124-0000		1	SLIDE PLANE	
100	2831673-0000		1	SLIDE PLATE	
110	2588046-0000		1	SHAFT	
120	2588290-0000		2	BRACKET	
130	2592780-0000		1	DOLLY	
140	2546463-0000		1	PRESSURE RAIL	
180	1484693-0000		1	KNIFE HOLDER	
190	1484695-0000		1	KNIFE	
200	1484703-0000		2	TIE ROD	
210	1484781-0000		2	PIN	
220	1487517-0000		1	CATCH	
230	2658058-0000		1	RAIL	
240	1519955-0000		2	WASHER	
250	1519967-0000		1	CLAMP	
260	1558801-0000		2	SHOULDER SCREW	
400	312105-0341		4	SCREW M6S ISO 4014 M5X50 A480	
410	312105-0451		1	SCREW M6S ISO 4017 M8X20 A480	
430	312115-0328		2	SCREW ISO4762 M5X14 A4 80	
440	312115-0333		2	SCREW ISO4762 M5X25 A4 80	
450	312115-0368		4	SCREW ISO4762 M6X16 A4 80	
460	312115-0372		4	SCREW ISO4762 M6X25 A4 80	
470	312115-0465		4	SCREW ISO4762 M8X70 A4 80	
480	312115-0467		8	SCREW ISO4762 M8X80 A4 80	
500	312155-0287		6	SCREW DIN 7991 MF6S M4X8 A4 70	
510	312155-0289		10	SCREW DIN 7991 MF6S M4X10 A4 70	
520	312145-0226		1	SCREW ISO 2009 MFS M3X12 A4	
530	312605-0316		4	HEXAGON NUT, M6M M6 A280	
560	315105-0146		4	WASHER BRB 5,3X10 RFR	
570	315105-0153		4	WASHER BRB 6,4X12 RFR	
575	315105-0156		6	WASHER BRB 6,7X14 RFR	
580	315105-0165		1	WASHER BRB 8,4X16 RFR	
610	315751-0103		4	RETAINING RING FOR SHAFT DIN 471 6 SS	
620	315751-0109		2	RETAINING RING FOR SHAFT DIN 471 12 SS	
650	342722-0197		4	STRAIGHT COUPLING	
660	342722-0204		1	PIPE COUPLING	
690	342748-0102		2	T-CONNECTION 6MM	
700	342770-0107		2	STRAIGHT COUPLING INT, D=8 MM - G1/8	
74072	90166-0193	MM	5000	TUBE 6 MM PUR BLUE	
740721	90166-0193	MM	60	TUBE 6 MM PUR BLUE	
740722	90166-0193	MM	400	TUBE 6 MM PUR BLUE	
74074	90166-0193	MM	5000	TUBE 6 MM PUR BLUE	
740741	90166-0193	MM	80	TUBE 6 MM PUR BLUE	
740742	90166-0193	MM	400	TUBE 6 MM PUR BLUE	
74084	90166-0194	MM	5000	TUBE 8 MM PUR BLUE	
740842	90166-0194	MM	40	TUBE 8 MM PUR BLUE	
7408421	90166-0194	MM	150	TUBE 8 MM PUR BLUE	
7408422	90166-0194	MM	150	TUBE 8 MM PUR BLUE	
74102	90166-0194	MM	5000	TUBE 8 MM PUR BLUE	
741022	90166-0194	MM	200	TUBE 8 MM PUR BLUE	
74104	90166-0194	MM	5000	TUBE 8 MM PUR BLUE	
750	90055-0217		2	ELBOW PIPE JOINT	
755	90055-0276		1	T-CONNECTION 8 MM	
758	90165-0087		1	T-CLIP T6 FOR TUBE D=6 - 7 MM	
770	90458-2448		2	ELBOW PIPE JOINT,EXT.THREAD,D=8 MM G1/4	
790	90458-2964		3	ELBOW PIPE JOINT, EXT.THREAD, D=8MM-G1/8	
850	90157-0016	ML	1	LOCKING FLUID LOCTITE 242 50 ML	
C74071	90459-1509		1	CYLINDER, ADVC-20-20-I-P	
C74072	90459-1509		1	CYLINDER, ADVC-20-20-I-P	
C74081	90459-2102		1	CYLINDER, AEVC 100-25-I-P	
C74082	90459-2102		1	CYLINDER, AEVC 100-25-I-P	
C7410	90459-2101		1	CYLINDER, ADVC-80-25-I-P	
S7408	90235-0206		1	QUICK EXHAUST VALVE, SEU-1/8	
S7410	90235-0206		1	QUICK EXHAUST VALVE, SEU-1/8	

Machine Type	Group Description	Used-In	Group Number	Page No

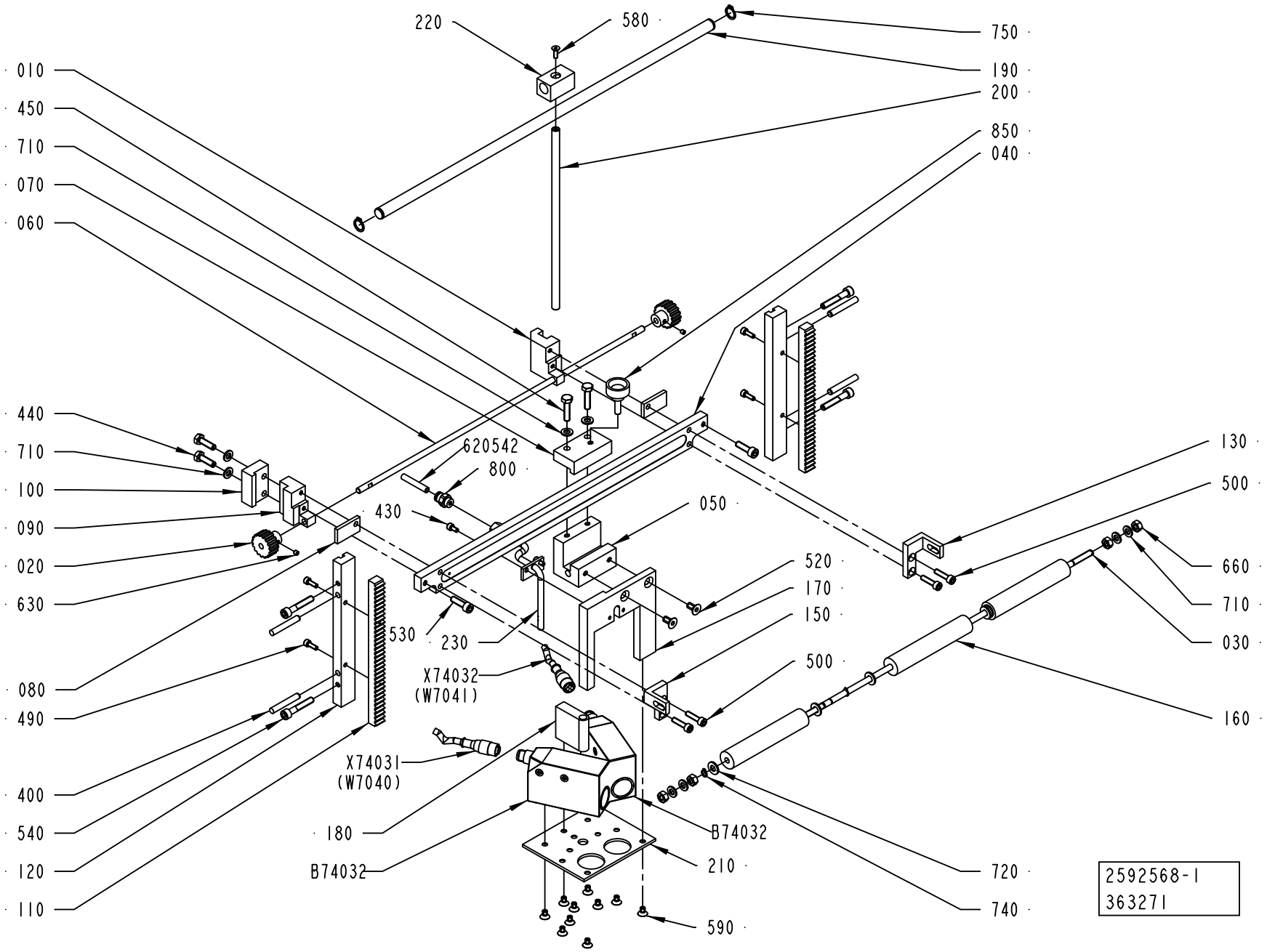
220
580
750
190
200
850
040
010
450
710
070
060
440
710
100
090
020
630
620542
800
430
050
520
170
150
500
130
500
660
710
030
530
230
X74032
(W7041)
080
490
400
540
120
110
X74031
(W7040)
180
B74032
B74032
210
590
720
740
160
2592568-1
363271

ECM: 366936 - 20081002
Group number: 2592568-0100
Assembly Drawing: 2592568-1_1_AE

Pos	Part No	UN	Qty	Description	Page No
A3/FLEX					
X74031	90458-0603		1	CONNECTOR FEMALE 5 PINS	
X74032	90458-0603		1	CONNECTOR FEMALE 5 PINS	
Common Parts					
010	1484705-0000		1	SLIDER	
020	1484706-0000		2	GEAR WHEEL	
030	2588046-0000		1	SHAFT	
040	1484776-0000		1	RAIL	
050	1484777-0000		1	SLIDER	
060	1484779-0000		1	ROD	
070	1484782-0000		1	CLAMP BLOCK	
080	1484783-0000		2	CLAMPING ELEMENT	
090	1484784-0000		1	LOCATING PIECE	
100	1484785-0000		1	LOCATING PIECE	
110	1487510-0000		2	RACK GEAR	
120	1487511-0000		2	BRACKET	
130	2588044-0000		1	BRACKET	
150	2588045-0000		1	BRACKET	
160	2831674-0000		3	ROLLER	
170	1487554-0000		1	BRACKET	
180	1487555-0000		1	BUSHING	
190	1487556-0000		1	BAR	
200	1487557-0000		1	BAR	
210	1487558-0000		1	FASTENING PLATE	
220	1487559-0000		1	SLIDER	
230	1519580-0000		1	GUIDE FINGER	
400	311103-0361		4	PARALLEL PIN ISO 2338 6M6X40 A1	
430	312115-0287		2	SCREW ISO4762 M4X8 A4 80	
440	312105-0370		2	SCREW M6S ISO 4017 M6X20 A480	
450	312105-0372		2	SCREW M6S ISO 4017 M6X25 A480	
490	312115-0291		4	SCREW ISO4762 M4X12 A4 80	
500	312115-0331		4	SCREW ISO4762 M5X20 A4 80	
520	312155-0366		2	SCREW DIN 7991 MF6S M6X12 A4 70	
530	312115-0370		2	SCREW ISO4762 M6X20 A4 80	
540	312115-0376		4	SCREW ISO4762 M6X35 A4 80	
580	312155-0291		1	SCREW DIN 7991 MF6S M4X12 A4 70	
590	312155-0323		10	SCREW DIN 7991 MF6S M5X8 A4 70	
620542	90166-0193	MM	4500	TUBE 6 MM PUR BLUE	
630	312318-0283		2	SCREW ISO4029 M4X4 A4	
660	312605-0316		4	HEXAGON NUT, M6M M6 A280	
710	315105-0153		8	WASHER BRB 6,4X12 RFR	
720	315105-0156		6	WASHER BRB 6,7X14 RFR	
740	315751-0103		4	RETAINING RING FOR SHAFT DIN 471 6 SS	
750	315751-0109		2	RETAINING RING FOR SHAFT DIN 471 12 SS	
800	342722-0202		1	PIPE COUPLING 1/8" D=6MM	
850	90051-0083		1	KNOB, EXTERNAL THREAD. NO. 8308-1321	
B74031	90458-0602		1	CONTRAST SCANNER, KT15W-P2213S02	
B74032	90458-0602		1	CONTRAST SCANNER, KT15W-P2213S02	

Machine Type	Group Description	Used-In	Group Number	Page No

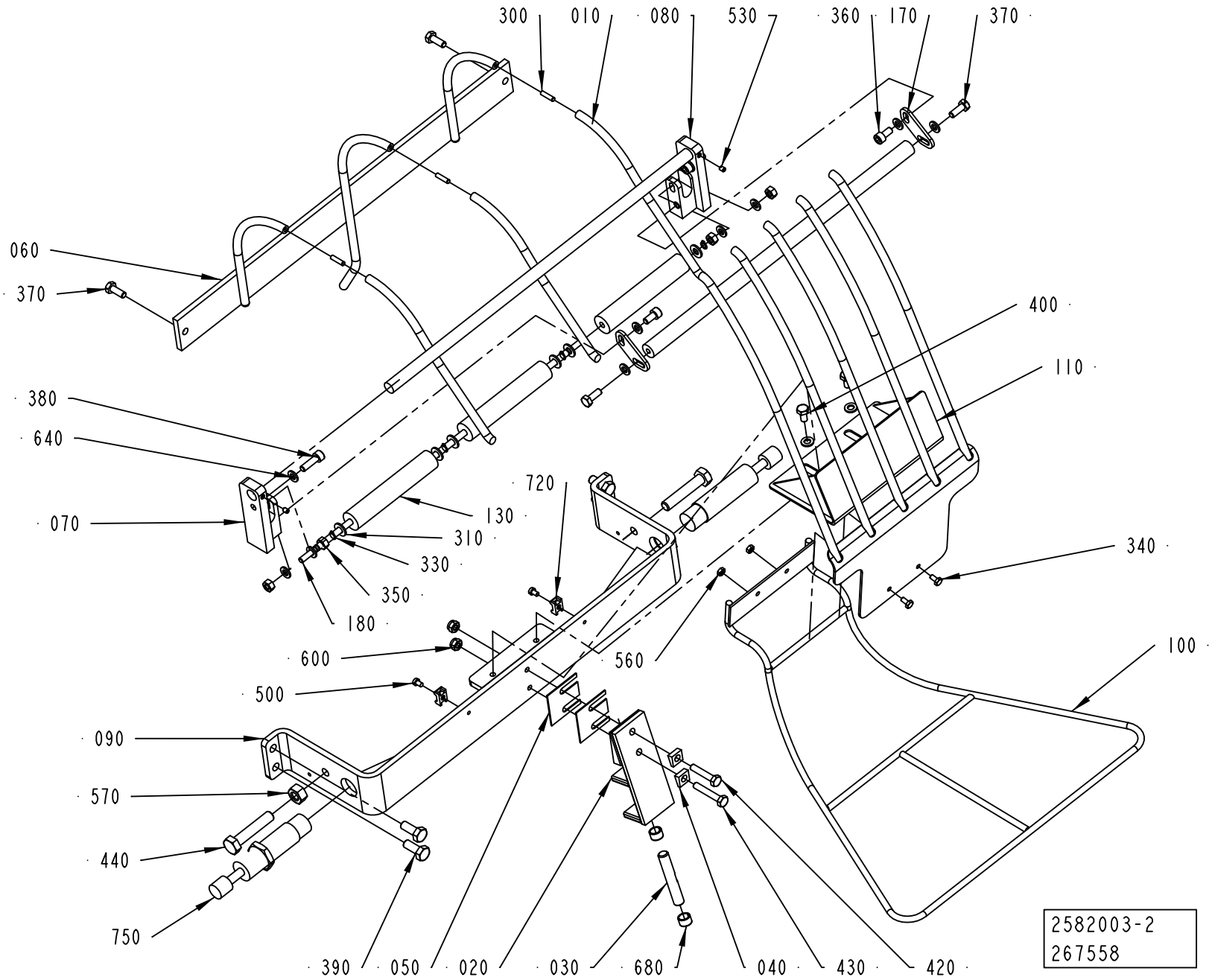
300
010
080
530
360
170
370
060
370
400
110
380
640
720
130
070
310
330
340
350
180
600
560
100
500
090
570
440
750
390
050
020
030
680
040
430
420
2582003-2
267558

ECM: 361858 - 20081001
Group number: 2582003-0100
Assembly Drawing: 2582003-2_1_AC

This list covers pages from 8-170 to 8-173

Pos	Part No	UN	Qty	Description	Page No
A3/FLEX TBA 0500B, A3/FLEX TBA 1000B, A3/FLEX TBA 1000S, A3/FLEX TBA 1000SQ, A3/FLEX TPA 1000SQ, A3/FLEX TBA 0200S, A3/FLEX TBA 1500S, A3/FLEX TBA 0200B, A3/FLEX TBA 0250B, A3/FLEX TBA 0330S, A3/FLEX TPA 0330SQ, A3/FLEX TPA 0500SQ, A3/FLEX TBA 0200M, A3/FLEX TBA 0250S, A3/FLEX TBA 0500S, A3/FLEX TPA 0250SQ, A3/FLEX TPA 0200SQ, A3/FLEX TPA 0750SQ, A3/FLEX TBA 0200SQ, A3/FLEX TBA 0250SQ, A3/FLEX TBA 0500SQ, A3/FLEX TGA 1000SQ, A3/FLEX TGA 0500SQ, A3/FLEX TGA 0750SQ (See drawing on page: 8-172)					
010	2913272-0000		1	RAIL	
060	2913271-0000		1	RAIL	
070	1519578-0000		2	MOUNTING BLOCK	
110	2582668-0000		1	PLATE	
190	1519591-0000		1	RAIL PIN	
300	311103-0270		3	PARALLEL PIN ISO 2338 4M6X16 A1	
360	312105-0366		3	SCREW M6S ISO 4017 M6X12 A480	
640	315105-0153		5	WASHER BRB 6,4X12 RFR	
760	312105-0291		1	SCREW M6S ISO 4017 M4X12 A470	
770	315105-0136		1	WASHER BRB 4,3X8 RFR	
A3/FLEX TBA 1890S, A3/FLEX TBA 2000S, A3/FLEX TBA 1400B (See drawing on page: 8-170)					
010	2681260-0000		1	RAIL	
060	2681259-0000		1	RAIL	
070	2689138-0000		1	MOUNTING BLOCK	
080	2689173-0000		1	MOUNTING BLOCK	
110	2681267-0000		1	PLATE	
130	2831674-0000		3	ROLLER	
170	2693199-0000		2	PLATE	
180	2681535-0000		1	SHAFT	
300	311103-0270		3	PARALLEL PIN ISO 2338 4M6X16 A1	
310	315105-0156		6	WASHER BRB 6,7X14 RFR	
330	315751-0103		4	RETAINING RING FOR SHAFT DIN 471 6 SS	
350	312605-0316		4	HEXAGON NUT, M6M M6 A280	
360	312115-0366		2	SCREW ISO4762 M6X12 A4 80	
400	312105-0366		2	SCREW M6S ISO 4017 M6X12 A480	
640	315105-0153		8	WASHER BRB 6,4X12 RFR	
Common Parts					
020	1490220-0000		1	ANGLE BRACKET	
030	1494664-0000		1	AXLE LINK	
040	1499566-0000		2	WASHER	
050	1512430-0000		2	VOLUME SHIM	
090	1519944-0000		1	BRACKET	
100	2563183-0000		1	GUIDE RAIL	
340	312105-0287		2	SCREW M6S ISO 4017 M4X8 A470	
370	312105-0368		4	SCREW M6S ISO 4017 M6X16 A480	
380	312105-0370		2	SCREW M6S ISO 4017 M6X20 A480	
390	312105-0451		4	SCREW M6S ISO 4017 M8X20 A480	
420	312109-0374		1	SCREW M6S ISO 4017 M6X30 A480	
430	312109-0376		1	SCREW M6S ISO 4017 M6X35 A480	
440	312109-0501		2	SCREW M6S ISO 4017 M10X50 A480	
500	312125-0285		2	SCREW ISO 1207 M4X6 A4	
530	312318-0284		2	SCREW ISO4029 M4X5 A4	
560	312605-0312		2	HEXAGON NUT, M6M M4 A280	
570	312605-0320		2	HEXAGON NUT, M6M M10 A280	
600	312812-0316		2	HEXAGON NUT, NY-LOCK M6 A480	
680	321141-0138		2	BEARING BUSH W/O FLANGE, 10X12X8 MM	
720	352113-0205		2	ANCHOR PLATES FOR STRIPS, TYPE TM2S8-C10	
750	90347-0182		2	SHOCK ABSORBER, YSR-16-20-C	

Machine Type | Group Description | Used-In | Group Number | Page No

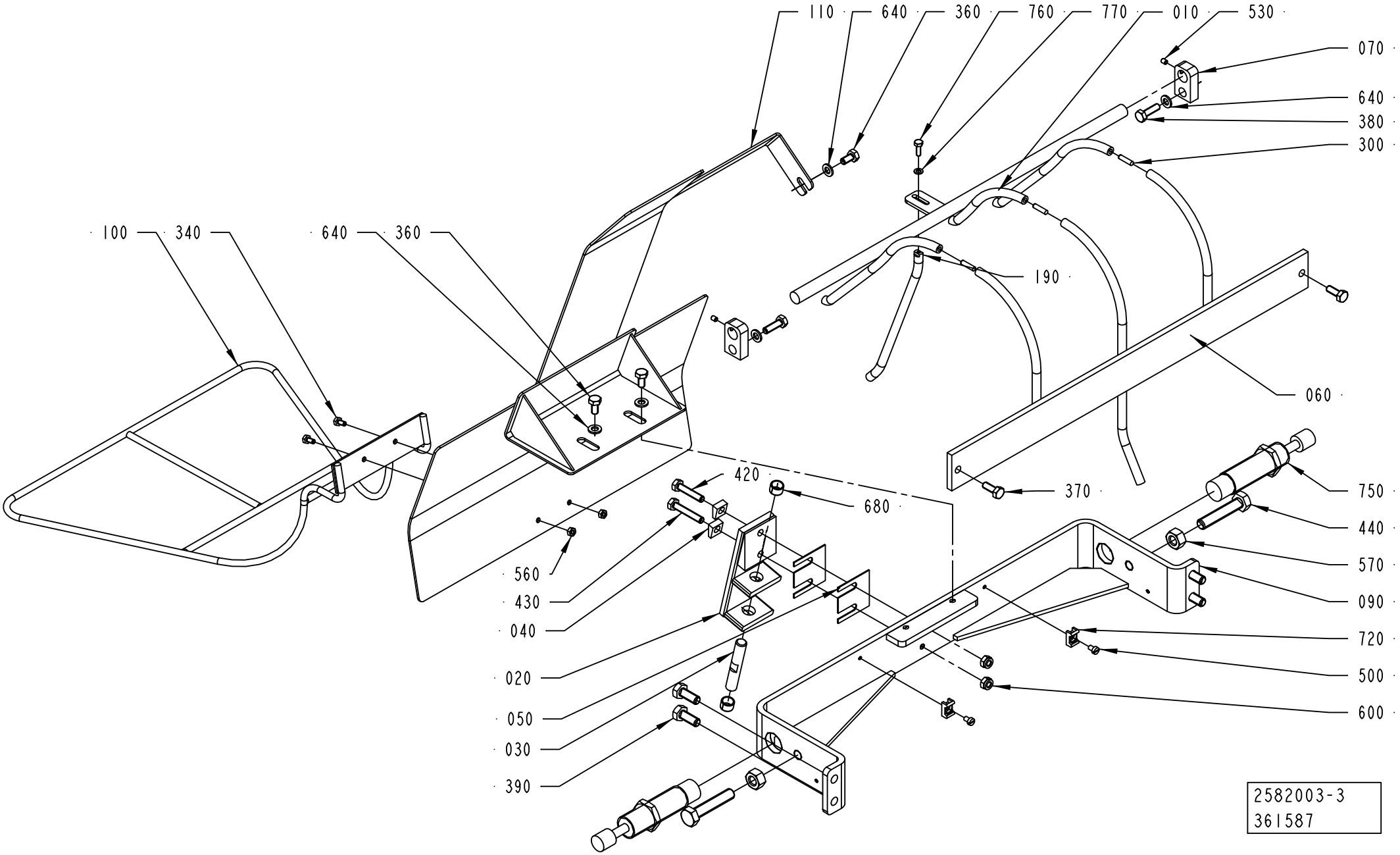
110
640
360
760
770
010
530
070
640
380
300
100
340
640
360
190
060
370
420
680
750
440
570
090
720
500
600
560
430
040
020
050
030
390
2582003-3
361587

ECM: 361858 - 20081001
Group number: 2582003-0100
Assembly Drawing: 2582003-3_1_AB

This list covers pages from 8-170 to 8-173

Pos	Part No	UN	Qty	Description	Page No
A3/FLEX TBA 0500B, A3/FLEX TBA 1000B, A3/FLEX TBA 1000S, A3/FLEX TBA 1000SQ, A3/FLEX TPA 1000SQ, A3/FLEX TBA 0200S, A3/FLEX TBA 1500S, A3/FLEX TBA 0200B, A3/FLEX TBA 0250B, A3/FLEX TBA 0330S, A3/FLEX TPA 0330SQ, A3/FLEX TPA 0500SQ, A3/FLEX TBA 0200M, A3/FLEX TBA 0250S, A3/FLEX TBA 0500S, A3/FLEX TPA 0250SQ, A3/FLEX TPA 0200SQ, A3/FLEX TPA 0750SQ, A3/FLEX TBA 0200SQ, A3/FLEX TBA 0250SQ, A3/FLEX TBA 0500SQ, A3/FLEX TGA 1000SQ, A3/FLEX TGA 0500SQ, A3/FLEX TGA 0750SQ (See drawing on page: 8-172)					
010	2913272-0000		1	RAIL	
060	2913271-0000		1	RAIL	
070	1519578-0000		2	MOUNTING BLOCK	
110	2582668-0000		1	PLATE	
190	1519591-0000		1	RAIL PIN	
300	311103-0270		3	PARALLEL PIN ISO 2338 4M6X16 A1	
360	312105-0366		3	SCREW M6S ISO 4017 M6X12 A480	
640	315105-0153		5	WASHER BRB 6,4X12 RFR	
760	312105-0291		1	SCREW M6S ISO 4017 M4X12 A470	
770	315105-0136		1	WASHER BRB 4,3X8 RFR	
A3/FLEX TBA 1890S, A3/FLEX TBA 2000S, A3/FLEX TBA 1400B (See drawing on page: 8-170)					
010	2681260-0000		1	RAIL	
060	2681259-0000		1	RAIL	
070	2689138-0000		1	MOUNTING BLOCK	
080	2689173-0000		1	MOUNTING BLOCK	
110	2681267-0000		1	PLATE	
130	2831674-0000		3	ROLLER	
170	2693199-0000		2	PLATE	
180	2681535-0000		1	SHAFT	
300	311103-0270		3	PARALLEL PIN ISO 2338 4M6X16 A1	
310	315105-0156		6	WASHER BRB 6,7X14 RFR	
330	315751-0103		4	RETAINING RING FOR SHAFT DIN 471 6 SS	
350	312605-0316		4	HEXAGON NUT, M6M M6 A280	
360	312115-0366		2	SCREW ISO4762 M6X12 A4 80	
400	312105-0366		2	SCREW M6S ISO 4017 M6X12 A480	
640	315105-0153		8	WASHER BRB 6,4X12 RFR	
Common Parts					
020	1490220-0000		1	ANGLE BRACKET	
030	1494664-0000		1	AXLE LINK	
040	1499566-0000		2	WASHER	
050	1512430-0000		2	VOLUME SHIM	
090	1519944-0000		1	BRACKET	
100	2563183-0000		1	GUIDE RAIL	
340	312105-0287		2	SCREW M6S ISO 4017 M4X8 A470	
370	312105-0368		4	SCREW M6S ISO 4017 M6X16 A480	
380	312105-0370		2	SCREW M6S ISO 4017 M6X20 A480	
390	312105-0451		4	SCREW M6S ISO 4017 M8X20 A480	
420	312109-0374		1	SCREW M6S ISO 4017 M6X30 A480	
430	312109-0376		1	SCREW M6S ISO 4017 M6X35 A480	
440	312109-0501		2	SCREW M6S ISO 4017 M10X50 A480	
500	312125-0285		2	SCREW ISO 1207 M4X6 A4	
530	312318-0284		2	SCREW ISO4029 M4X5 A4	
560	312605-0312		2	HEXAGON NUT, M6M M4 A280	
570	312605-0320		2	HEXAGON NUT, M6M M10 A280	
600	312812-0316		2	HEXAGON NUT, NY-LOCK M6 A480	
680	321141-0138		2	BEARING BUSH W/O FLANGE, 10X12X8 MM	
720	352113-0205		2	ANCHOR PLATES FOR STRIPS, TYPE TM2S8-C10	
750	90347-0182		2	SHOCK ABSORBER, YSR-16-20-C	

Machine Type | Group Description | Used-In | Group Number | Page No

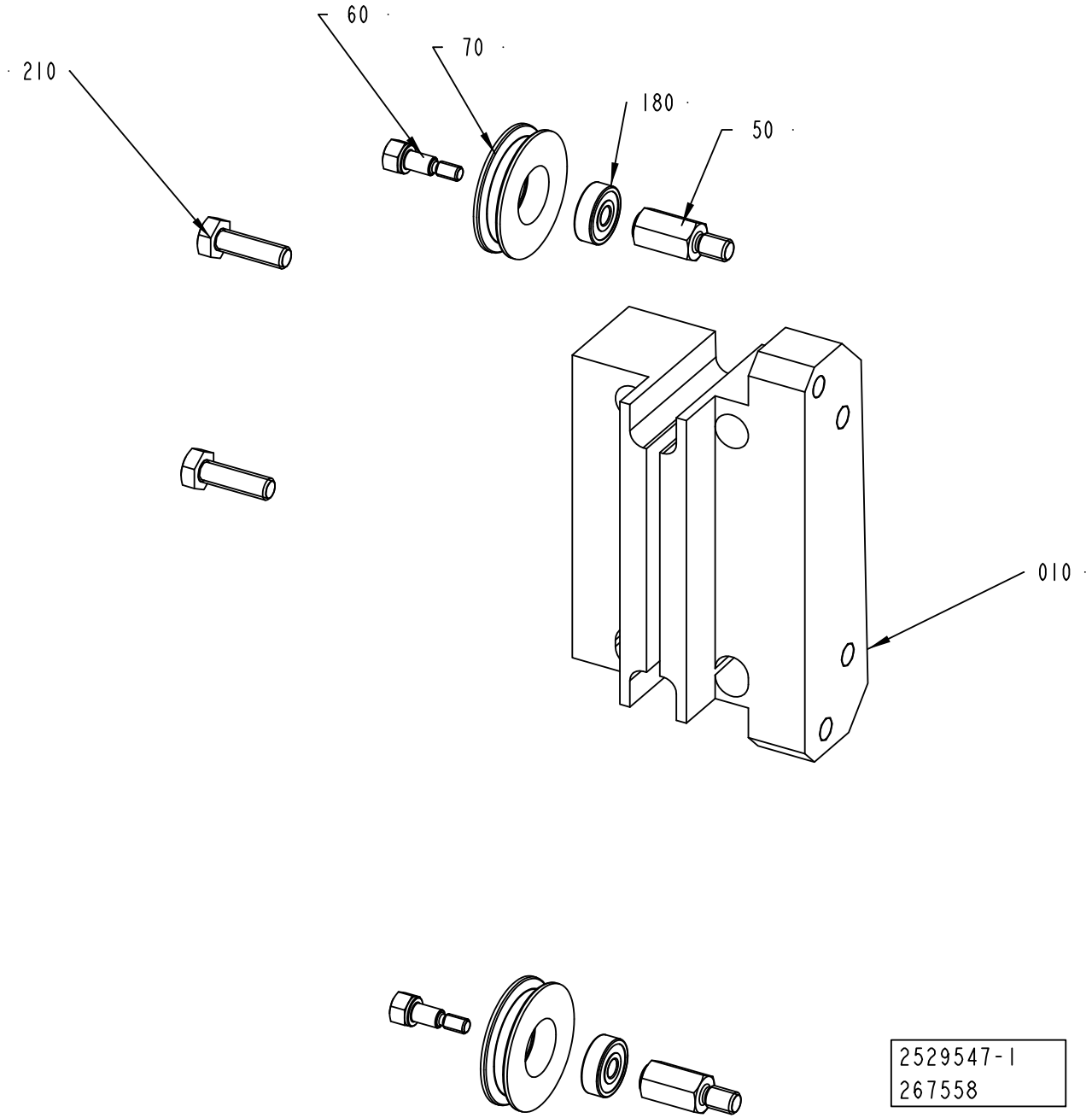
60
70
180
50
210
010
2529547-1
267558

ECM: 383466 - 20090402
Group number: 2529547-0100
Assembly Drawing: 2529547-1_1_AC

Pos	Part No	UN	Qty	Description	Page No
A3/FLEX					
010	2831678-0000		1	SUPPORT	
A3/COMPACTFLEX					
010	2831677-0000		1	SUPPORT	
Common Parts					
050	1558251-0000		2	SHAFT	
060	1558252-0000		2	SCREW	
070	1558253-0000		2	ROLLER	
180	90458-2950		2	BALL BEARING, 5X16X5 MM	
210	312105-0370		2	SCREW M6S ISO 4017 M6X20 A480	

Pos	Part No	UN	Qty	Description	Page No

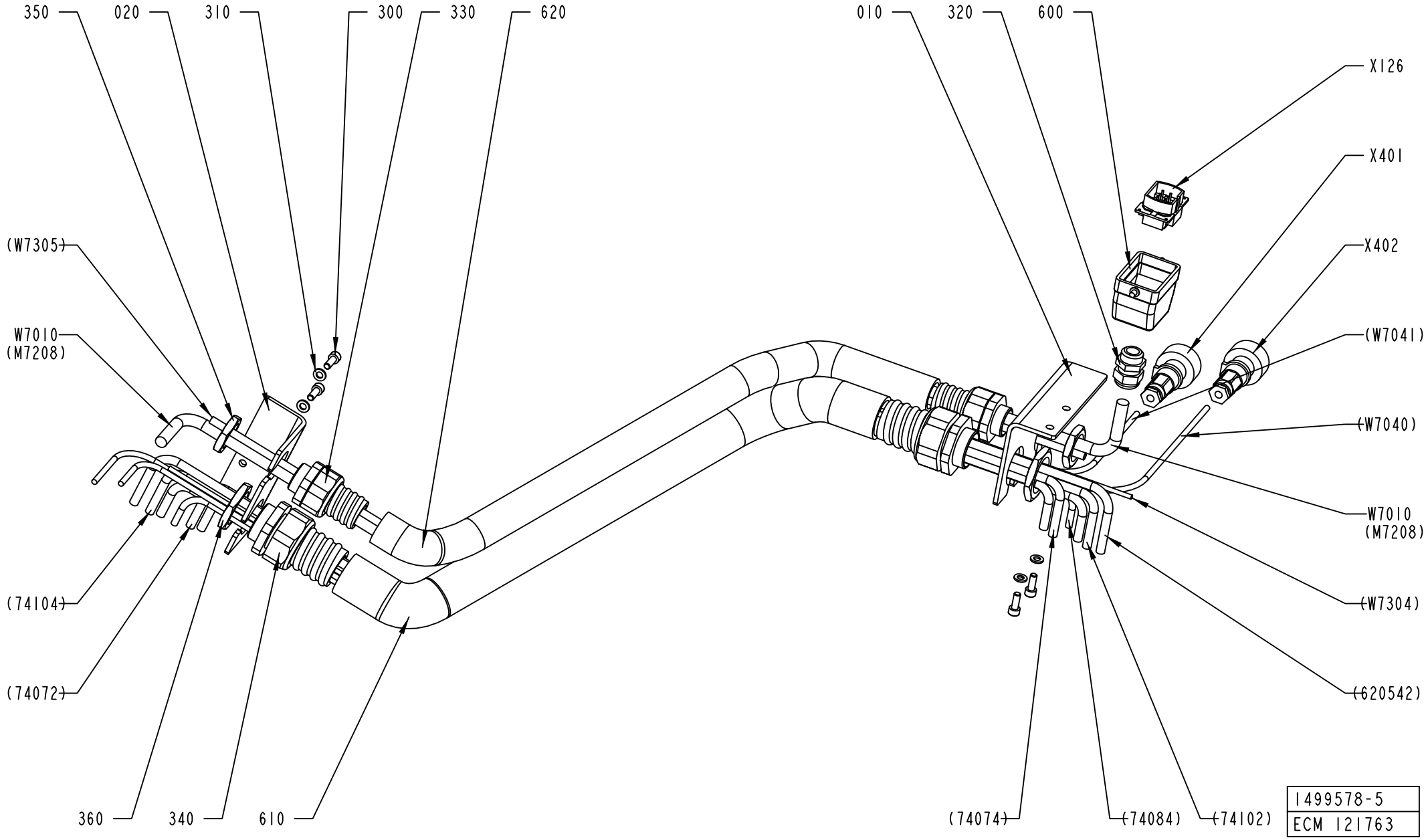
350
020
310
300
330
620
010
320
600
X126
X401
X402
(W7041)
(W7040)
(W7305)
W7010
(M7208)
W7010
(M7208)
(W7304)
(620542)
(74104)
(74072)
360
340
610
(74074)
(74084)
(74102)
1499578-5
ECM 121763

ECM: 195268 - 20041207
Group number: 1499578-0300
Assembly Drawing: 1499578-5_1_AA

Pos	Part No	UN	Qty	Description	Page No
A3/FLEX					
W7010	90220-0104	M	9	SCR. CABLE 4X1,5MM2	
Common Parts					
010	2628989-0000		1	BRACKET	
020	2628990-0000		1	BRACKET	
300	312115-0368		4	SCREW ISO4762 M6X16 A4 80	
310	315105-0153		4	WASHER BRB 6,4X12 RFR	
320	352103-0108		1	CABLE GLAND, ST 13,5 , PR20,4/PG13,5	
330	353243-0007		2	HOSE GLAND W/O INSERT PG21 EXTENDED	
340	353243-0008		2	HOSE GLAND W/O INSERT PG29 EXTENDED	
350	90099-0119		2	NUT, PR 28,3 (PG21)	
360	90099-0120		2	NUT, PR 37 (PG29)	
600	90110-0157		1	CABLE HOOD 6-POL 70.352.0628.1	
610	90152-0060	MM	850	SPIRAL CONDUIT, 42X35, UL3529	
620	90152-0070	MM	850	METAL HOSE, 32,5X26, UL 2621	
X126	90110-0159		1	MALE INSERT 70.310.0640.0	
X401	90110-0235		1	CABLE CONTACT, PX0739/P	
X402	90110-0235		1	CABLE CONTACT, PX0739/P	

Pos	Part No	UN	Qty	Description	Page No

MATERIAL HOLDER L1

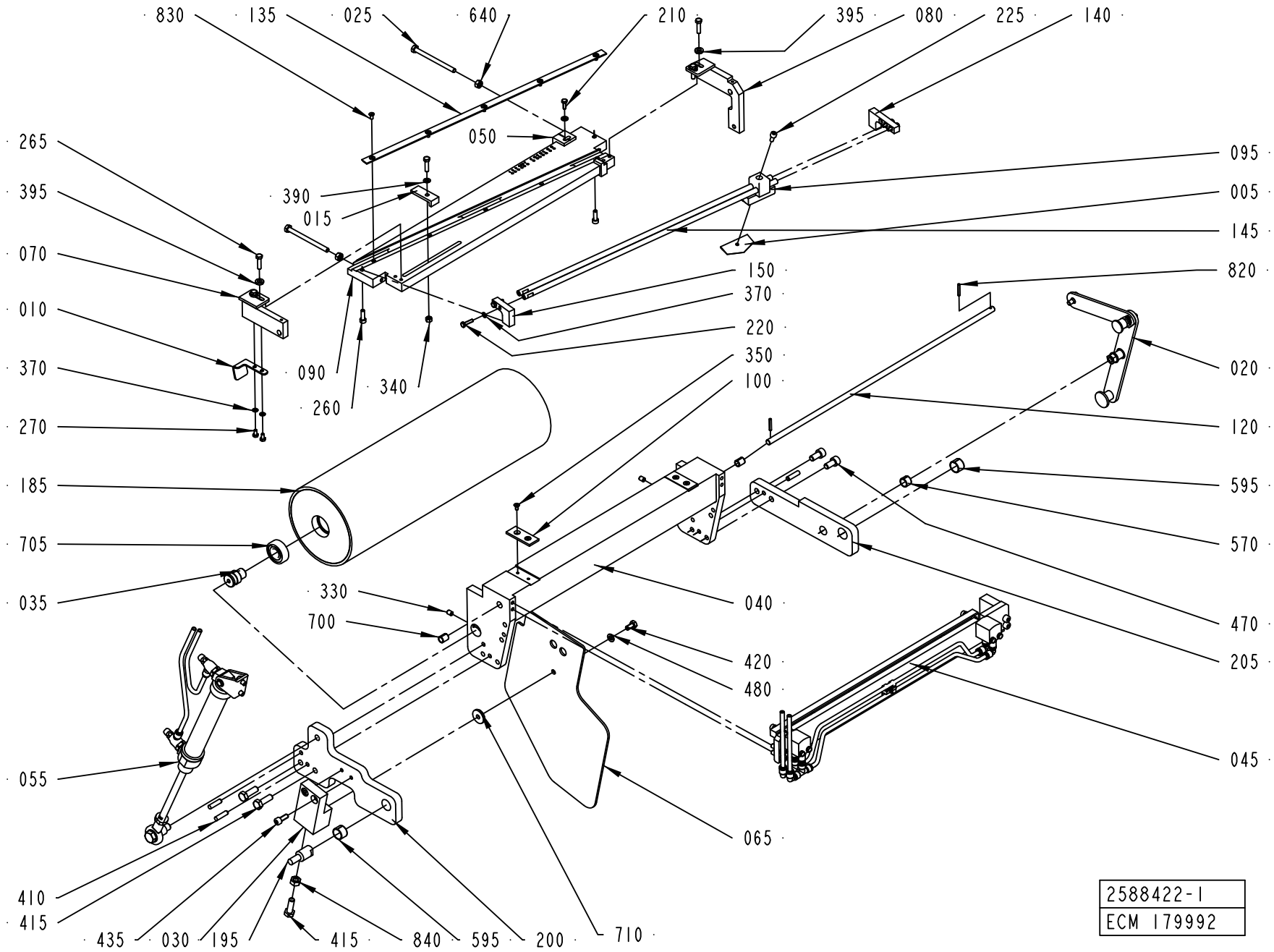

ECM: 383463 - 20090402
Group number: 2588422-0100
Assembly Drawing: 2588422-1_1_AE

This list covers pages from 8-178 to 8-181

Pos	Part No	UN	Qty	Description	Page No
A3/FLEX TGA (See drawing on page: 8-180)					
005	596678-0000		1	KNIFE	
050	2587251-0000		1	ANGLE PIECE	
090	2769873-0000		1	CUTTING TABLE	
095	2589791-0000		1	KNIFE HOLDER	
130	2769874-0000		1	SPACER	
140	1487781-0000		1	BRACKET	
145	1487782-0000		2	SHAFT	
150	2566118-0000		1	BRACKET	
220	312105-0293		4	SCREW M6S ISO 4017 M4X16 A470	
225	312115-0327		1	SCREW ISO4762 M5X12 A4 80	
260	312115-0329		2	SCREW ISO4762 M5X16 A4 80	
370	315105-0136		6	WASHER BRB 4,3X8 RFR	
850	312115-0372		2	SCREW ISO4762 M6X25 A4 80	
A3/FLEX TBA WITH ARL, A3/FLEX TBA WITH ARL, A3/FLEX TPA WITH ARL, A3/FLEX TPA WITH ARL (See drawing on page: 8-178)					
005	596678-0000		1	KNIFE	
050	2587251-0000		1	ANGLE PIECE	
090	2566117-0000		1	CUTTING TABLE	
095	2589791-0000		1	KNIFE HOLDER	
140	1487781-0000		1	BRACKET	
145	1487782-0000		2	SHAFT	
150	2566118-0000		1	BRACKET	
220	312105-0293		4	SCREW M6S ISO 4017 M4X16 A470	
225	312115-0327		1	SCREW ISO4762 M5X12 A4 80	
260	312115-0329		2	SCREW ISO4762 M5X16 A4 80	
370	315105-0136		6	WASHER BRB 4,3X8 RFR	
Common Parts					
010	2538065-0000		1	REFLECTOR	
015	1490821-0000		1	ANGLE PIECE	
020	1524398-0100		1	HANDLE	**8-183**
025	312109-0386		2	SCREW M6S ISO 4017 M6X80 A480	
030	2699996-0000		1	BLOCK	
035	1499582-0000		2	AXLE PIN	
040	1487770-0000		1	BRACKET	
045	2588383-0100		1	MATERIAL HOLDER	**8-185**
055	1524394-0100		1	CYLINDER	**8-187**
065	1512276-0000		1	PROTECTION PLATE	
070	2700019-0000		1	ROCKER ARM	
080	2700030-0000		1	ROCKER ARM	
100	2553275-0000		2	SLIDE PLATE	
120	1487779-0000		1	SHAFT	
135	1487518-0000		1	RULER	
185	1499588-0000		1	BENDING ROLLER	
195	1511568-0000		1	PIN	
200	2587250-0000		1	ARM	
205	1511575-0000		1	ARM	
210	312105-0291		1	SCREW M6S ISO 4017 M4X12 A470	
265	312105-0331		5	SCREW M6S ISO 4017 M5X20 A480	
270	312105-0287		2	SCREW M6S ISO 4017 M4X8 A470	
330	312318-0362		2	SCREW ISO4029 M6X8 A4	
340	312605-0314		1	HEXAGON NUT, M6M M5 A280	
350	312155-0287		4	SCREW DIN 7991 MF6S M4X8 A4 70	
390	315105-0146		2	WASHER BRB 5,3X10 RFR	
395	315115-0153		4	WASHER PLAIN, TBRB 6,4/12 H=3	
410	311103-1355		3	PARALLEL PIN ISO 2338 6M6X24 A1	
415	312105-0453		3	SCREW M6S ISO 4017 M8X25 A480	
420	312105-0366		1	SCREW M6S ISO 4017 M6X12 A480	
435	312115-0368		2	SCREW ISO4762 M6X16 A4 80	
470	312115-0449		2	SCREW ISO4762 M8X16 A4 80	
480	315105-0153		1	WASHER BRB 6,4X12 RFR	
570	321141-0178		1	BEARING BUSH W/O FLANGE, 12X14X10 MM	
595	321141-0216		2	BEARING BUSH W/O FLANGE, 16X18X12 MM	
640	312605-0316		2	HEXAGON NUT, M6M M6 A280	
700	321141-0104		2	BEARING BUSH W/O FLANGE, 8X10X12 MM	
705	321313-0102		2	BALL BEARING, 15X35X11 MM	
710	315125-0153		1	WASHER TBRSB 6,4X22X4 A4	
820	90258-0031		2	PIN, STRAIGHT SLOTTED SPRING FRP 3X20	
830	312145-0287		5	SCREW ISO 2009 MFS M4X8 A4	
840	312605-0318		1	HEXAGON NUT, M6M M8 A280	

Machine Type | Group Description | Used-In | Group Number | Page No

MATERIAL HOLDER L1

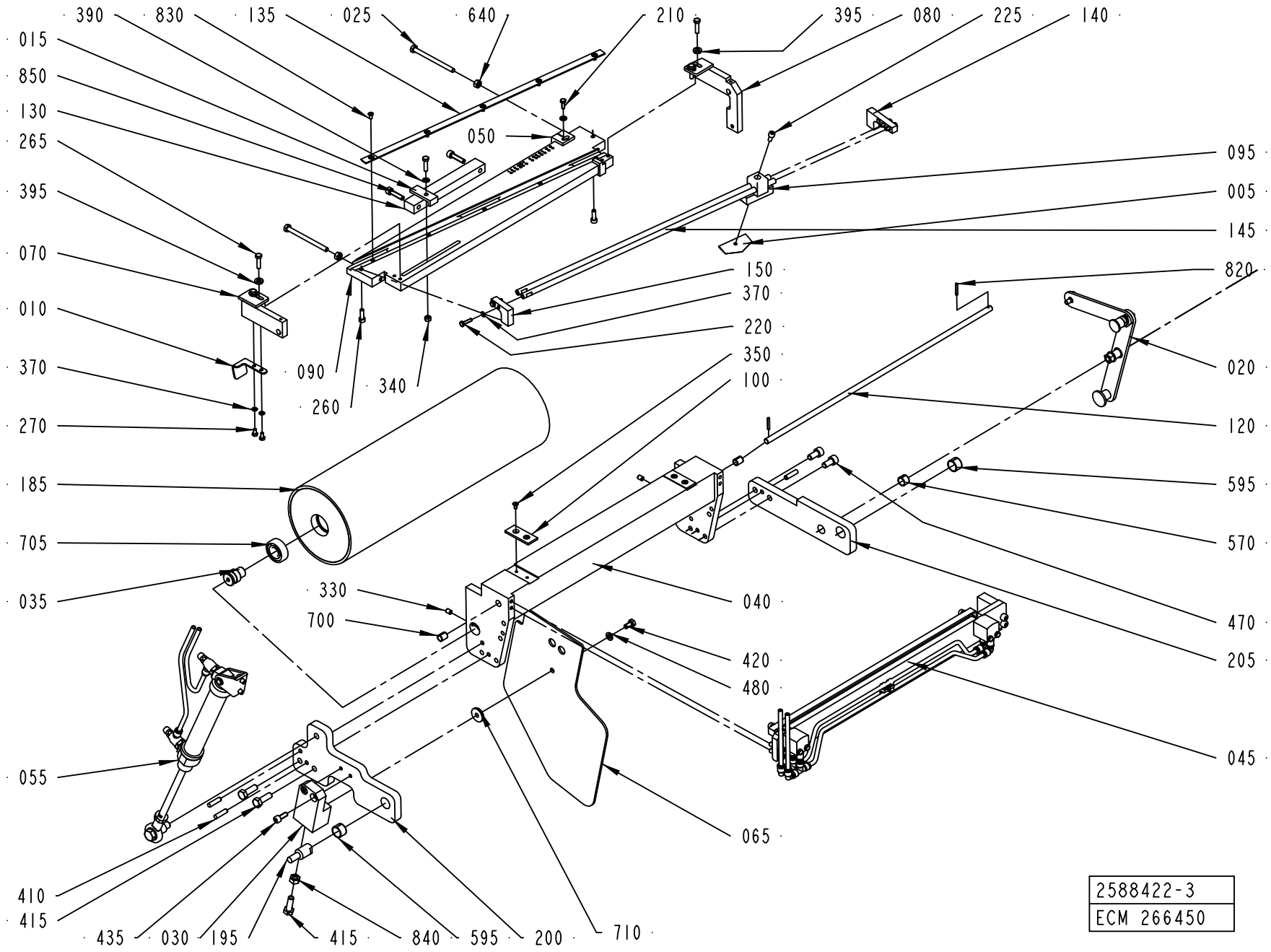

ECM: 383463 - 20090402
Group number: 2588422-0100
Assembly Drawing: 2588422-3_1_AA

This list covers pages from 8-178 to 8-181

Pos	Part No	UN	Qty	Description	Page No
A3/FLEX TGA (See drawing on page: 8-180)					
005	596678-0000		1	KNIFE	
050	2587251-0000		1	ANGLE PIECE	
090	2769873-0000		1	CUTTING TABLE	
095	2589791-0000		1	KNIFE HOLDER	
130	2769874-0000		1	SPACER	
140	1487781-0000		1	BRACKET	
145	1487782-0000		2	SHAFT	
150	2566118-0000		1	BRACKET	
220	312105-0293		4	SCREW M6S ISO 4017 M4X16 A470	
225	312115-0327		1	SCREW ISO4762 M5X12 A4 80	
260	312115-0329		2	SCREW ISO4762 M5X16 A4 80	
370	315105-0136		6	WASHER BRB 4,3X8 RFR	
850	312115-0372		2	SCREW ISO4762 M6X25 A4 80	
A3/FLEX TBA WITH ARL, A3/FLEX TBA WITH ARL, A3/FLEX TPA WITH ARL, A3/FLEX TPA WITH ARL (See drawing on page: 8-178)					
005	596678-0000		1	KNIFE	
050	2587251-0000		1	ANGLE PIECE	
090	2566117-0000		1	CUTTING TABLE	
095	2589791-0000		1	KNIFE HOLDER	
140	1487781-0000		1	BRACKET	
145	1487782-0000		2	SHAFT	
150	2566118-0000		1	BRACKET	
220	312105-0293		4	SCREW M6S ISO 4017 M4X16 A470	
225	312115-0327		1	SCREW ISO4762 M5X12 A4 80	
260	312115-0329		2	SCREW ISO4762 M5X16 A4 80	
370	315105-0136		6	WASHER BRB 4,3X8 RFR	
Common Parts					
010	2538065-0000		1	REFLECTOR	
015	1490821-0000		1	ANGLE PIECE	
020	1524398-0100		1	HANDLE	**8-183**
025	312109-0386		2	SCREW M6S ISO 4017 M6X80 A480	
030	2699996-0000		1	BLOCK	
035	1499582-0000		2	AXLE PIN	
040	1487770-0000		1	BRACKET	
045	2588383-0100		1	MATERIAL HOLDER	**8-185**
055	1524394-0100		1	CYLINDER	**8-187**
065	1512276-0000		1	PROTECTION PLATE	
070	2700019-0000		1	ROCKER ARM	
080	2700030-0000		1	ROCKER ARM	
100	2553275-0000		2	SLIDE PLATE	
120	1487779-0000		1	SHAFT	
135	1487518-0000		1	RULER	
185	1499588-0000		1	BENDING ROLLER	
195	1511568-0000		1	PIN	
200	2587250-0000		1	ARM	
205	1511575-0000		1	ARM	
210	312105-0291		1	SCREW M6S ISO 4017 M4X12 A470	
265	312105-0331		5	SCREW M6S ISO 4017 M5X20 A480	
270	312105-0287		2	SCREW M6S ISO 4017 M4X8 A470	
330	312318-0362		2	SCREW ISO4029 M6X8 A4	
340	312605-0314		1	HEXAGON NUT, M6M M5 A280	
350	312155-0287		4	SCREW DIN 7991 MF6S M4X8 A4 70	
390	315105-0146		2	WASHER BRB 5,3X10 RFR	
395	315115-0153		4	WASHER PLAIN, TBRB 6,4/12 H=3	
410	311103-1355		3	PARALLEL PIN ISO 2338 6M6X24 A1	
415	312105-0453		3	SCREW M6S ISO 4017 M8X25 A480	
420	312105-0366		1	SCREW M6S ISO 4017 M6X12 A480	
435	312115-0368		2	SCREW ISO4762 M6X16 A4 80	
470	312115-0449		2	SCREW ISO4762 M8X16 A4 80	
480	315105-0153		1	WASHER BRB 6,4X12 RFR	
570	321141-0178		1	BEARING BUSH W/O FLANGE, 12X14X10 MM	
595	321141-0216		2	BEARING BUSH W/O FLANGE, 16X18X12 MM	
640	312605-0316		2	HEXAGON NUT, M6M M6 A280	
700	321141-0104		2	BEARING BUSH W/O FLANGE, 8X10X12 MM	
705	321313-0102		2	BALL BEARING, 15X35X11 MM	
710	315125-0153		1	WASHER TBRSB 6,4X22X4 A4	
820	90258-0031		2	PIN, STRAIGHT SLOTTED SPRING FRP 3X20	
830	312145-0287		5	SCREW ISO 2009 MFS M4X8 A4	
840	312605-0318		1	HEXAGON NUT, M6M M8 A280	

Machine Type | Group Description | Used-In | Group Number | Page No

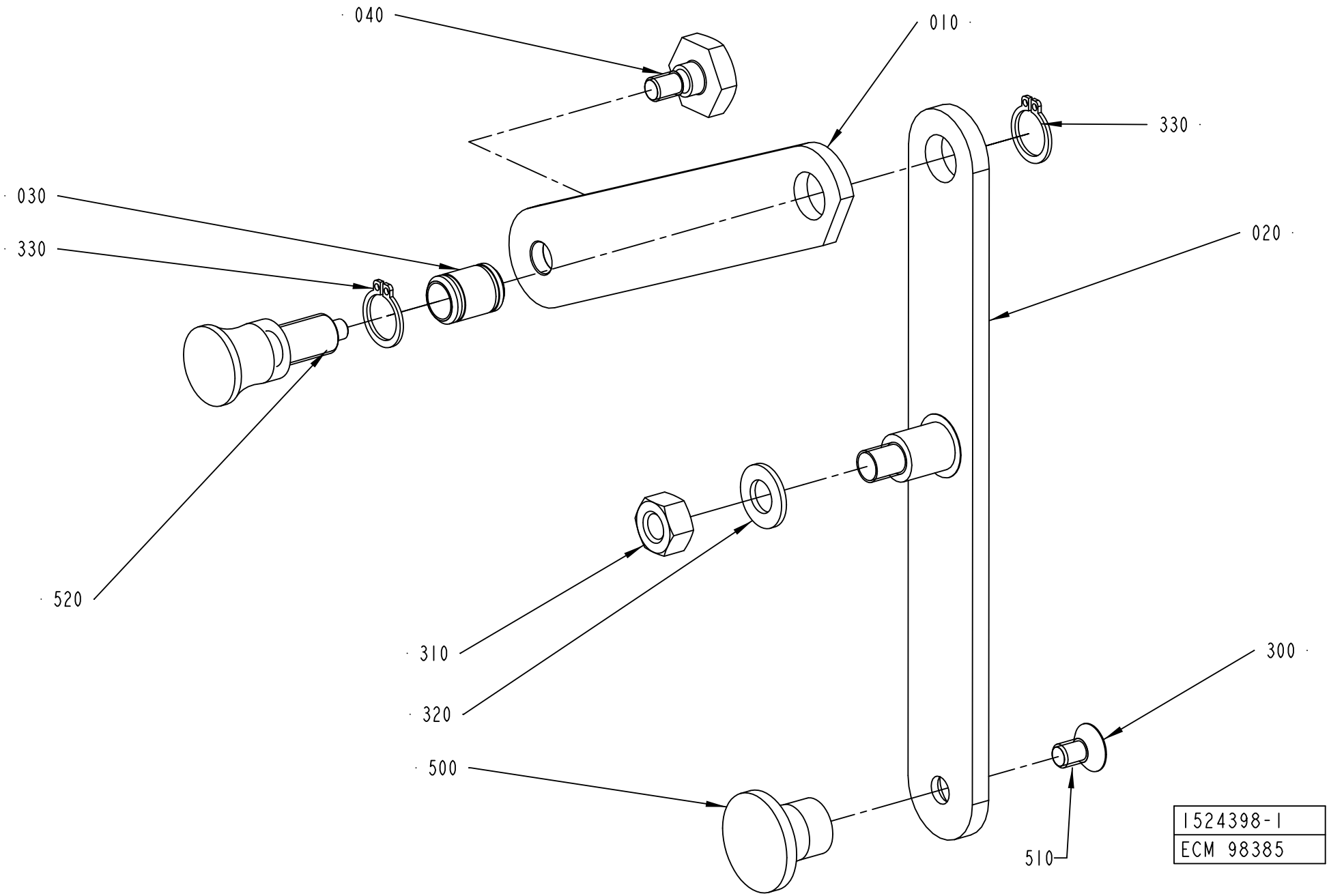
040
010
330
030
330
020
520
310
320
300
500
510
1524398-1
ECM 98385

ECM: 180696 - 20040910
Group number: 1524398-0100
Assembly Drawing: 1524398-1_1_AC

Pos	Part No	UN	Qty	Description	Page No
-					
010	1490809-0000		1	ARM	
020	1490810-0000		1	ARM	
030	1490812-0000		1	AXLE	
040	1490813-0000		1	SCREW	
300	312155-0364		1	SCREW DIN 7991 MF6S M6X10 A4 70	
310	312605-0318		1	HEXAGON NUT, M6M M8 A280	
320	315105-0165		1	WASHER BRB 8,4X16 RFR	
330	315751-0109		2	RETAINING RING FOR SHAFT DIN 471 12 SS	
500	90051-0082		1	KNOB, CIRCUL, THREADED BUSH, M6 25X21 MM	
510	90157-0016		1	LOCKING FLUID LOCTITE 242 50 ML	
520	90051-0087		1	LOCK KNOB, NO. GN 617 A5	

Pos	Part No	UN	Qty	Description	Page No

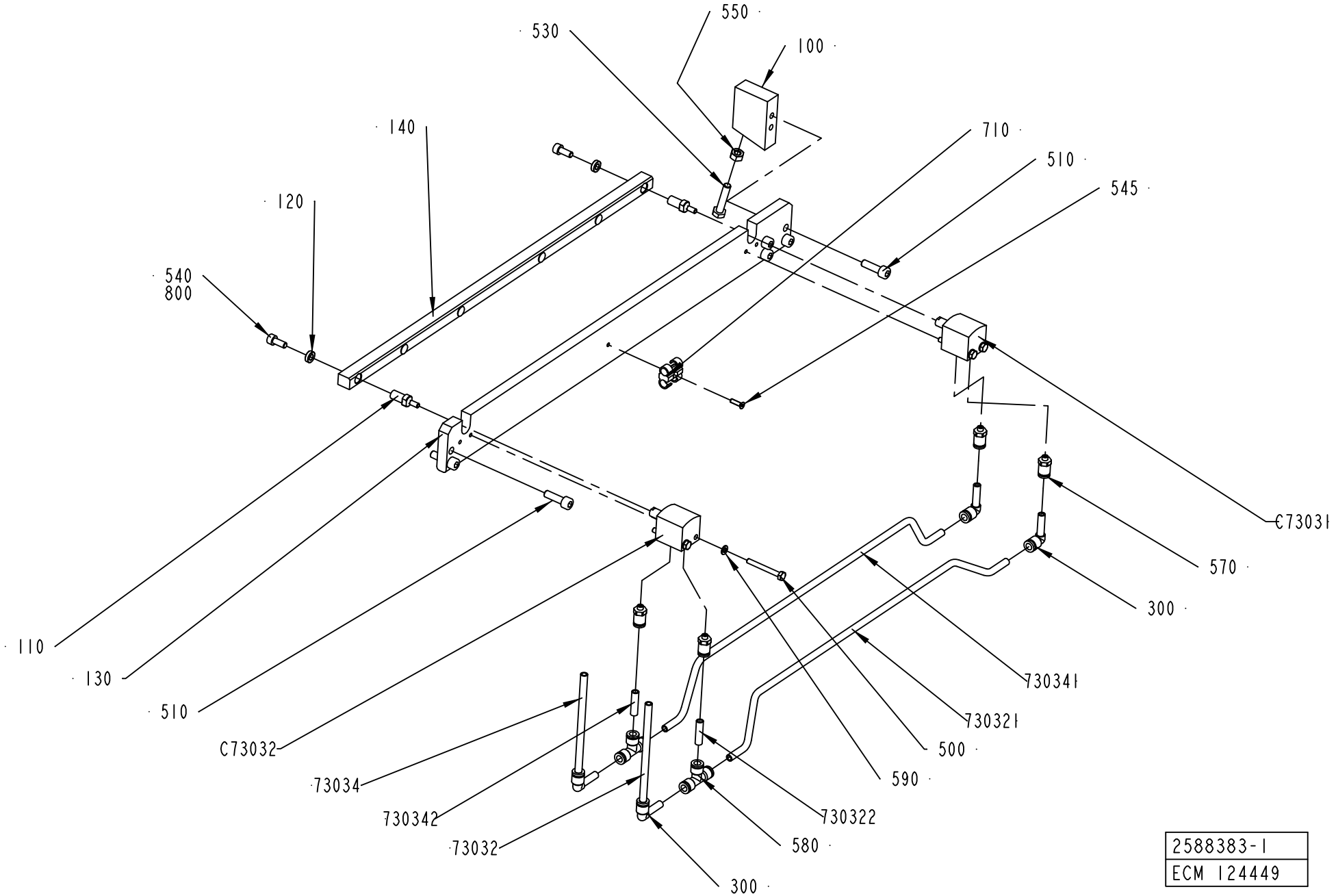

2588383-1
ECM 124449

ECM: 180657 - 20041005
Group number: 2588383-0100
Assembly Drawing: 2588383-1_1_AC

Pos	Part No	UN	Qty	Description	Page No
-					
100	2553272-0000		1	SUPPORT BLOCK	
110	2553273-0000		2	AXLE PIN	
120	2553799-0000		2	WASHER	
130	2582558-0000		1	BASE PLATE	
140	2582559-0000		1	RAIL	
300	90055-0217		4	ELBOW PIPE JOINT	
500	312105-0301		4	SCREW M6S ISO 4017 M4X35 A470	
510	312115-0370		6	SCREW ISO4762 M6X20 A4 80	
530	312109-0374		1	SCREW M6S ISO 4017 M6X30 A480	
540	312115-0327		2	SCREW ISO4762 M5X12 A4 80	
545	312155-0226		1	SCREW DIN 7991 MF6S M3X12 A4 70	
550	312605-0316		1	HEXAGON NUT, M6M M6 A280	
570	342722-0197		4	STRAIGHT COUPLING	
580	342748-0102		2	T-CONNECTION 6MM	
590	315105-0136		4	WASHER BRB 4,3X8 RFR	
710	90165-0087		1	T-CLIP T6 FOR TUBE D=6 - 7 MM	
73032	90166-0193	MM	6500	TUBE 6 MM PUR BLUE	
730321	90166-0193	MM	400	TUBE 6 MM PUR BLUE	
730322	90166-0193	MM	30	TUBE 6 MM PUR BLUE	
73034	90166-0193	MM	6500	TUBE 6 MM PUR BLUE	
730341	90166-0193	MM	400	TUBE 6 MM PUR BLUE	
730342	90166-0193	MM	30	TUBE 6 MM PUR BLUE	
800	90157-0016	ML	1	LOCKING FLUID LOCTITE 242 50 ML	
C73031	90459-0503		1	CYLINDER, ADVC-16-10-I-P	
C73032	90459-0503		1	CYLINDER, ADVC-16-10-I-P	

Pos	Part No	UN	Qty	Description	Page No

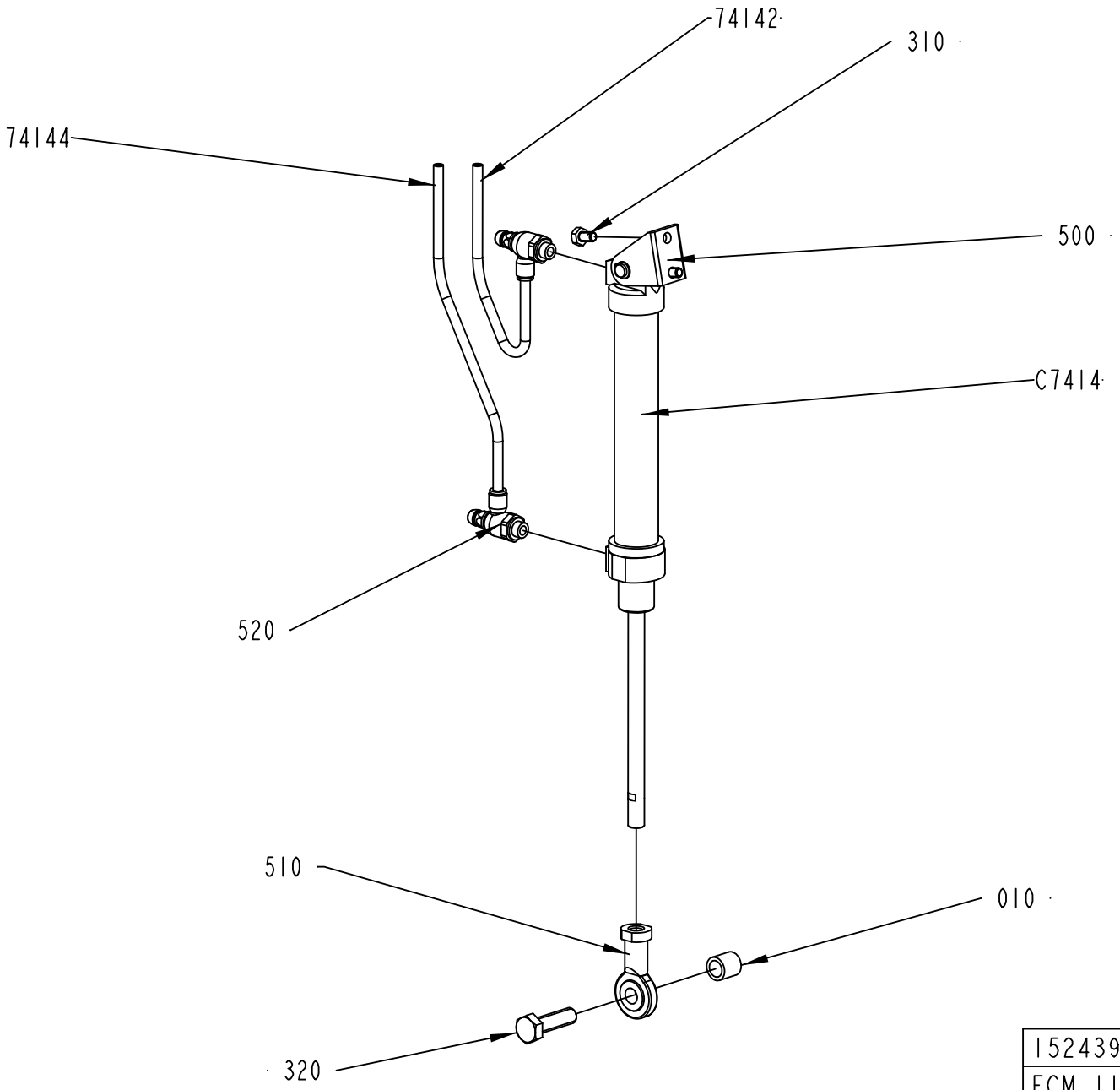
74142
310
74144
500
C7414
520
510
010
320
1524394-1
ECM 111238

ECM: 252903 - 20060303
Group number: 1524394-0100
Assembly Drawing: 1524394-1_1_AE

Pos	Part No	UN	Qty	Description	Page No
A3/FLEX					
74142	90166-0193	MM	6000	TUBE 6 MM PUR BLUE	
74144	90166-0193	MM	6000	TUBE 6 MM PUR BLUE	
C7414	90239-0832		1	DOUBLE ACTING, MINI-ISO, CYL. 25-125	
Common Parts					
010	1511569-0000		1	SPACER	
310	312105-0364		2	SCREW M6S ISO 4017 M6X10 A480	
320	312105-0497		1	SCREW M6S ISO 4017 M10X35 A480	
500	90239-0487		1	REAR, CLEVIS, MINI-ISO 20-25	
510	90239-0405		1	ROD END,BALL JOINT EYE M10X1,25	
520	90235-0846		2	THROTTLE CHECK VALVE G1/8", MANUAL, 6	

Pos	Part No	UN	Qty	Description	Page No

MATERIAL HOLDER L2

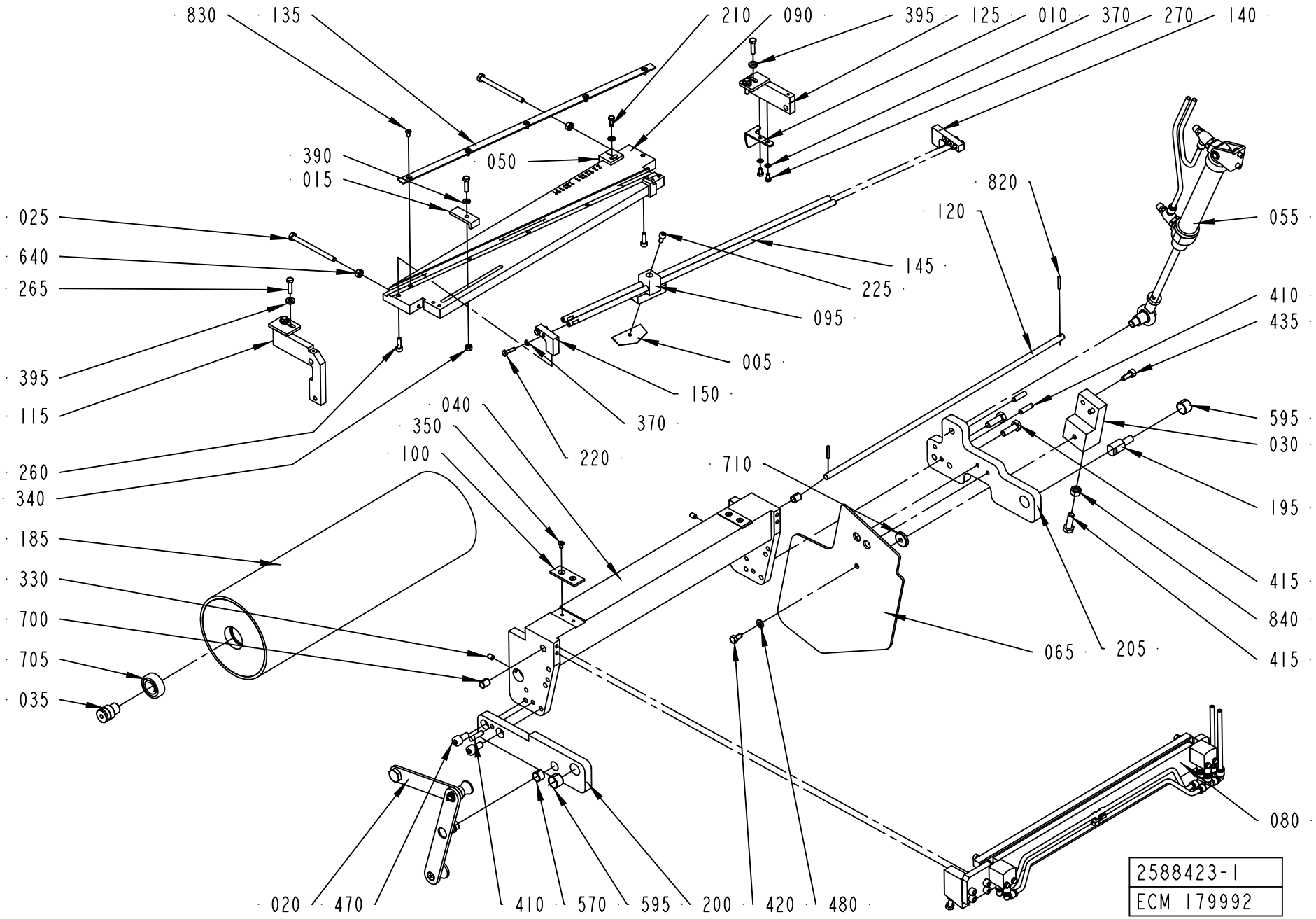

ECM: 383462 - 20090402
Group number: 2588423-0100
Assembly Drawing: 2588423-1_1_AE

This list covers pages from 8-188 to 8-191

Pos	Part No	UN	Qty	Description	Page No
A3/FLEX TGA (See drawing on page: 8-190)					
005	596678-0000		1	KNIFE	
050	2587251-0000		1	ANGLE PIECE	
090	2769873-0000		1	CUTTING TABLE	
095	2589791-0000		1	KNIFE HOLDER	
130	2769874-0000		1	SPACER	
140	1487781-0000		1	BRACKET	
145	1487782-0000		2	SHAFT	
150	2566118-0000		1	BRACKET	
220	312105-0293		4	SCREW M6S ISO 4017 M4X16 A470	
225	312115-0327		1	SCREW ISO4762 M5X12 A4 80	
260	312115-0329		2	SCREW ISO4762 M5X16 A4 80	
370	315105-0136		6	WASHER BRB 4,3X8 RFR	
850	312115-0372		2	SCREW ISO4762 M6X25 A4 80	
A3/FLEX TBA WITH ARL, A3/FLEX TBA WITH ARL, A3/FLEX TPA WITH ARL, A3/FLEX TPA WITH ARL (See drawing on page: 8-188)					
005	596678-0000		1	KNIFE	
050	2587251-0000		1	ANGLE PIECE	
090	2566117-0000		1	CUTTING TABLE	
095	2589791-0000		1	KNIFE HOLDER	
140	1487781-0000		1	BRACKET	
145	1487782-0000		2	SHAFT	
150	2566118-0000		1	BRACKET	
220	312105-0293		4	SCREW M6S ISO 4017 M4X16 A470	
225	312115-0327		1	SCREW ISO4762 M5X12 A4 80	
260	312115-0329		2	SCREW ISO4762 M5X16 A4 80	
370	315105-0136		6	WASHER BRB 4,3X8 RFR	
Common Parts					
010	2538064-0000		1	REFLECTOR	
015	1490821-0000		1	ANGLE PIECE	
020	1519589-0100		1	HANDLE	**8-193**
025	312109-0386		2	SCREW M6S ISO 4017 M6X80 A480	
030	2699996-0000		1	BLOCK	
035	1499582-0000		2	AXLE PIN	
040	1487770-0000		1	BRACKET	
055	1487528-0100		1	CYLINDER	**8-195**
065	1512276-0000		1	PROTECTION PLATE	
080	2588379-0100		1	MATERIAL HOLDER	**8-197**
100	2553275-0000		2	SLIDE PLATE	
115	2700034-0000		1	ROCKER ARM	
120	1487779-0000		1	SHAFT	
125	2700035-0000		1	ROCKER ARM	
135	1487518-0000		1	RULER	
185	1499588-0000		1	BENDING ROLLER	
195	1511568-0000		1	PIN	
200	1499577-0000		1	ARM	
205	2587250-0000		1	ARM	
210	312105-0291		1	SCREW M6S ISO 4017 M4X12 A470	
265	312105-0331		5	SCREW M6S ISO 4017 M5X20 A480	
270	312105-0287		2	SCREW M6S ISO 4017 M4X8 A470	
330	312318-0362		2	SCREW ISO4029 M6X8 A4	
340	312605-0314		1	HEXAGON NUT, M6M M5 A280	
350	312155-0287		4	SCREW DIN 7991 MF6S M4X8 A4 70	
390	315105-0146		2	WASHER BRB 5,3X10 RFR	
395	315115-0153		4	WASHER PLAIN, TBRB 6,4/12 H=3	
410	311103-1355		3	PARALLEL PIN ISO 2338 6M6X24 A1	
415	312105-0453		3	SCREW M6S ISO 4017 M8X25 A480	
420	312105-0366		1	SCREW M6S ISO 4017 M6X12 A480	
435	312115-0368		2	SCREW ISO4762 M6X16 A4 80	
470	312115-0449		2	SCREW ISO4762 M8X16 A4 80	
480	315105-0153		1	WASHER BRB 6,4X12 RFR	
570	321141-0178		1	BEARING BUSH W/O FLANGE, 12X14X10 MM	
595	321141-0216		2	BEARING BUSH W/O FLANGE, 16X18X12 MM	
640	312605-0316		2	HEXAGON NUT, M6M M6 A280	
700	321141-0104		2	BEARING BUSH W/O FLANGE, 8X10X12 MM	
705	321313-0102		2	BALL BEARING, 15X35X11 MM	
710	315125-0153		1	WASHER TBRSB 6,4X22X4 A4	
820	90258-0031		2	PIN, STRAIGHT SLOTTED SPRING FRP 3X20	
830	312145-0287		5	SCREW ISO 2009 MFS M4X8 A4	
840	312605-0318		1	HEXAGON NUT, M6M M8 A280	

Machine Type | Group Description | Used-In | Group Number | Page No

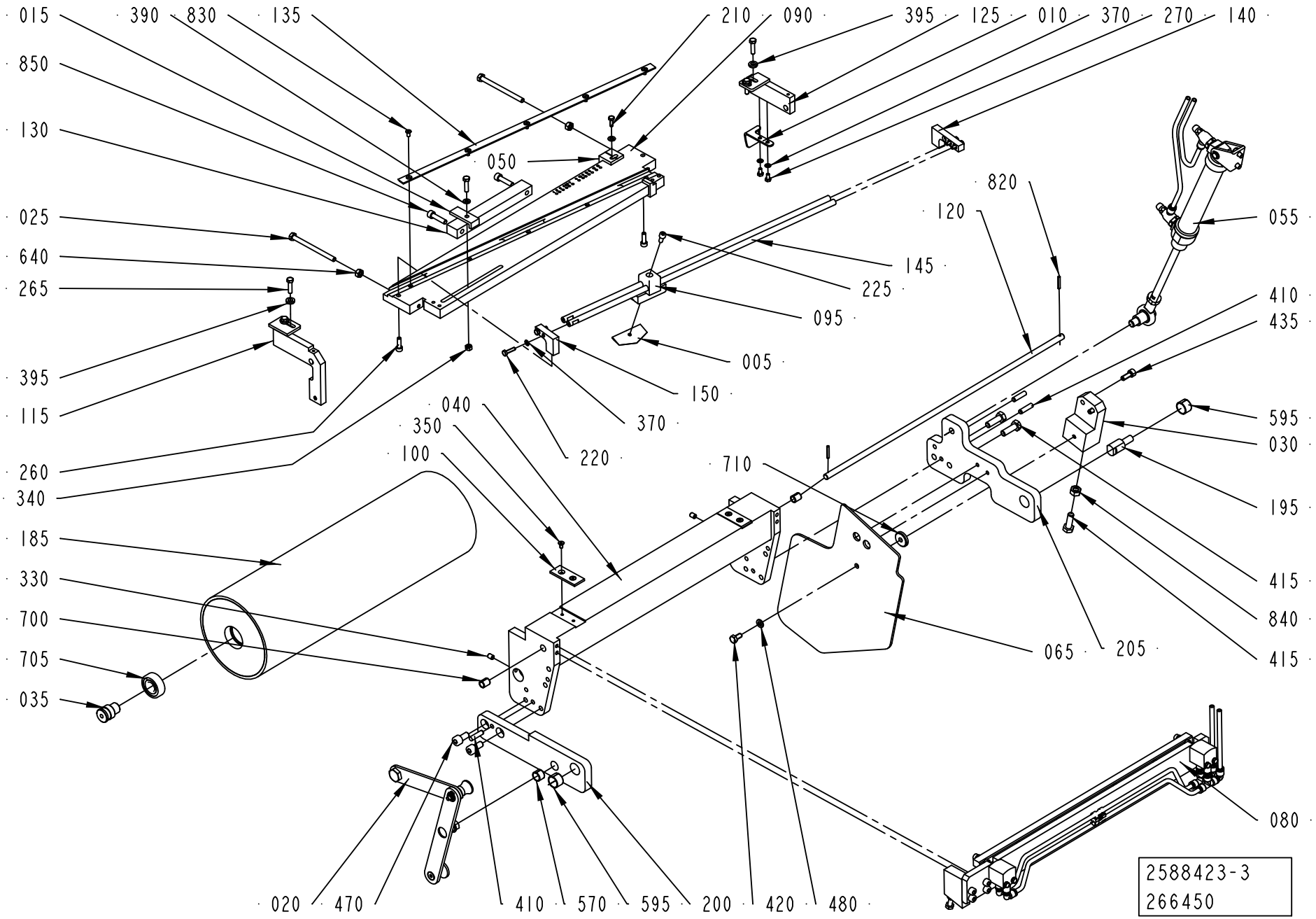
015
390
830
135
210
090
395
125
010
370
270
140
850
130
050
820
120
055
025
640
265
145
225
095
410
435
005
395
115
150
370
040
350
100
220
595
030
260
340
710
195
185
330
700
705
035
415
840
415
065
205
080
020
470
410
570
595
200
420
480
2588423-3
266450

ECM: 383462 - 20090402
Group number: 2588423-0100
Assembly Drawing: 2588423-3_1_AA

This list covers pages from 8-188 to 8-191

Pos	Part No	UN	Qty	Description	Page No
A3/FLEX TGA (See drawing on page: 8-190)					
005	596678-0000		1	KNIFE	
050	2587251-0000		1	ANGLE PIECE	
090	2769873-0000		1	CUTTING TABLE	
095	2589791-0000		1	KNIFE HOLDER	
130	2769874-0000		1	SPACER	
140	1487781-0000		1	BRACKET	
145	1487782-0000		2	SHAFT	
150	2566118-0000		1	BRACKET	
220	312105-0293		4	SCREW M6S ISO 4017 M4X16 A470	
225	312115-0327		1	SCREW ISO4762 M5X12 A4 80	
260	312115-0329		2	SCREW ISO4762 M5X16 A4 80	
370	315105-0136		6	WASHER BRB 4,3X8 RFR	
850	312115-0372		2	SCREW ISO4762 M6X25 A4 80	
A3/FLEX TBA WITH ARL, A3/FLEX TBA WITH ARL, A3/FLEX TPA WITH ARL, A3/FLEX TPA WITH ARL (See drawing on page: 8-188)					
005	596678-0000		1	KNIFE	
050	2587251-0000		1	ANGLE PIECE	
090	2566117-0000		1	CUTTING TABLE	
095	2589791-0000		1	KNIFE HOLDER	
140	1487781-0000		1	BRACKET	
145	1487782-0000		2	SHAFT	
150	2566118-0000		1	BRACKET	
220	312105-0293		4	SCREW M6S ISO 4017 M4X16 A470	
225	312115-0327		1	SCREW ISO4762 M5X12 A4 80	
260	312115-0329		2	SCREW ISO4762 M5X16 A4 80	
370	315105-0136		6	WASHER BRB 4,3X8 RFR	
Common Parts					
010	2538064-0000		1	REFLECTOR	
015	1490821-0000		1	ANGLE PIECE	
020	1519589-0100		1	HANDLE	**8-193**
025	312109-0386		2	SCREW M6S ISO 4017 M6X80 A480	
030	2699996-0000		1	BLOCK	
035	1499582-0000		2	AXLE PIN	
040	1487770-0000		1	BRACKET	
055	1487528-0100		1	CYLINDER	**8-195**
065	1512276-0000		1	PROTECTION PLATE	
080	2588379-0100		1	MATERIAL HOLDER	**8-197**
100	2553275-0000		2	SLIDE PLATE	
115	2700034-0000		1	ROCKER ARM	
120	1487779-0000		1	SHAFT	
125	2700035-0000		1	ROCKER ARM	
135	1487518-0000		1	RULER	
185	1499588-0000		1	BENDING ROLLER	
195	1511568-0000		1	PIN	
200	1499577-0000		1	ARM	
205	2587250-0000		1	ARM	
210	312105-0291		1	SCREW M6S ISO 4017 M4X12 A470	
265	312105-0331		5	SCREW M6S ISO 4017 M5X20 A480	
270	312105-0287		2	SCREW M6S ISO 4017 M4X8 A470	
330	312318-0362		2	SCREW ISO4029 M6X8 A4	
340	312605-0314		1	HEXAGON NUT, M6M M5 A280	
350	312155-0287		4	SCREW DIN 7991 MF6S M4X8 A4 70	
390	315105-0146		2	WASHER BRB 5,3X10 RFR	
395	315115-0153		4	WASHER PLAIN, TBRB 6,4/12 H=3	
410	311103-1355		3	PARALLEL PIN ISO 2338 6M6X24 A1	
415	312105-0453		3	SCREW M6S ISO 4017 M8X25 A480	
420	312105-0366		1	SCREW M6S ISO 4017 M6X12 A480	
435	312115-0368		2	SCREW ISO4762 M6X16 A4 80	
470	312115-0449		2	SCREW ISO4762 M8X16 A4 80	
480	315105-0153		1	WASHER BRB 6,4X12 RFR	
570	321141-0178		1	BEARING BUSH W/O FLANGE, 12X14X10 MM	
595	321141-0216		2	BEARING BUSH W/O FLANGE, 16X18X12 MM	
640	312605-0316		2	HEXAGON NUT, M6M M6 A280	
700	321141-0104		2	BEARING BUSH W/O FLANGE, 8X10X12 MM	
705	321313-0102		2	BALL BEARING, 15X35X11 MM	
710	315125-0153		1	WASHER TBRSB 6,4X22X4 A4	
820	90258-0031		2	PIN, STRAIGHT SLOTTED SPRING FRP 3X20	
830	312145-0287		5	SCREW ISO 2009 MFS M4X8 A4	
840	312605-0318		1	HEXAGON NUT, M6M M8 A280	

Machine Type | Group Description | Used-In | Group Number | Page No

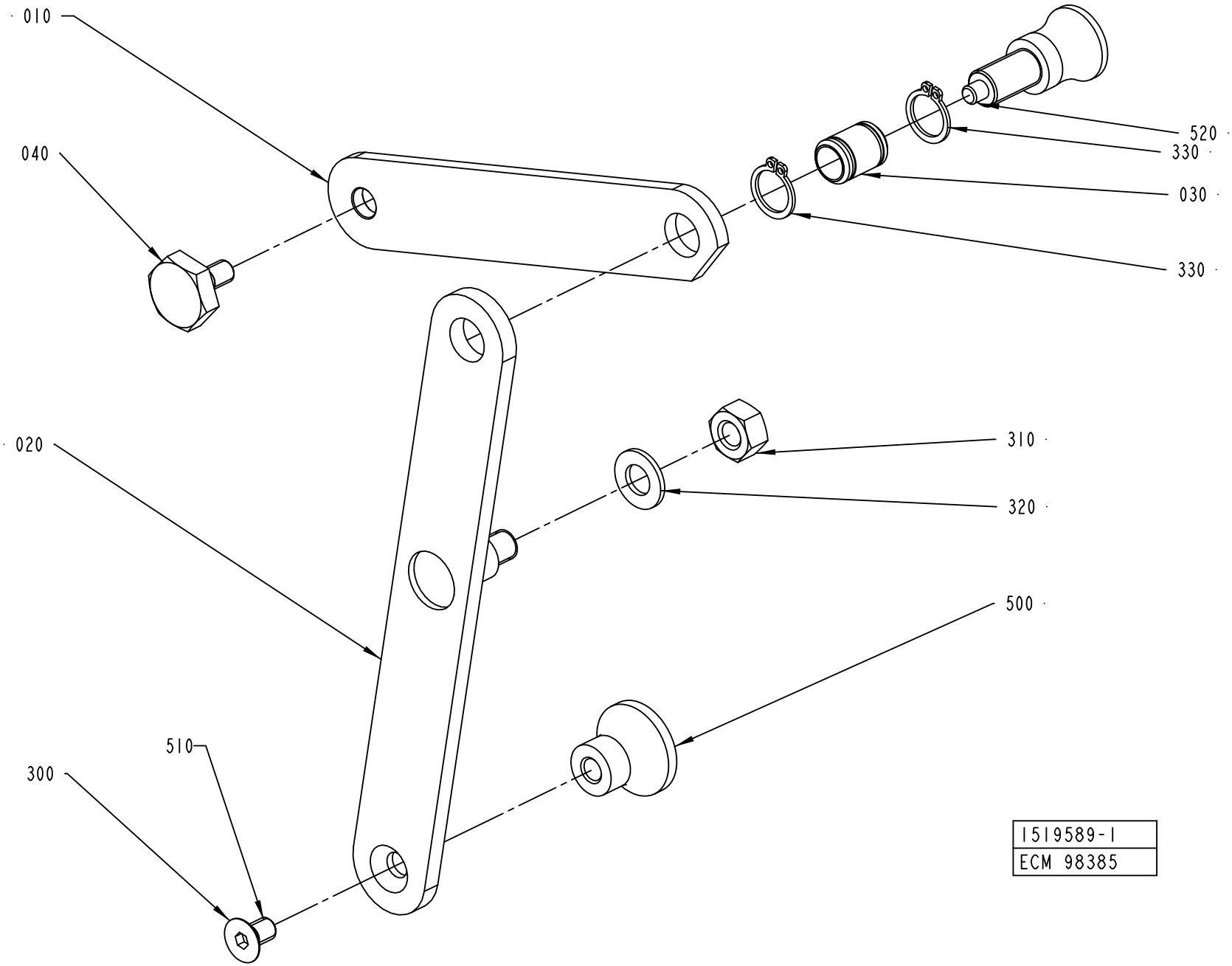
010
040
020
300
510
520
330
030
330
310
320
500
1519589-1
ECM 98385

ECM: 180681 - 20040910
Group number: 1519589-0100
Assembly Drawing: 1519589-1_1_AC

Pos	Part No	UN	Qty	Description	Page No
-					
010	1490809-0000		1	ARM	
020	1490810-0000		1	ARM	
030	1490812-0000		1	AXLE	
040	1490813-0000		1	SCREW	
300	312155-0364		1	SCREW DIN 7991 MF6S M6X10 A4 70	
310	312605-0318		1	HEXAGON NUT, M6M M8 A280	
320	315105-0165		1	WASHER BRB 8,4X16 RFR	
330	315751-0109		2	RETAINING RING FOR SHAFT DIN 471 12 SS	
500	90051-0082		1	KNOB, CIRCUL, THREADED BUSH, M6 25X21 MM	
510	90157-0016		1	LOCKING FLUID LOCTITE 242 50 ML	
520	90051-0087		1	LOCK KNOB, NO. GN 617 A5	

Pos	Part No	UN	Qty	Description	Page No

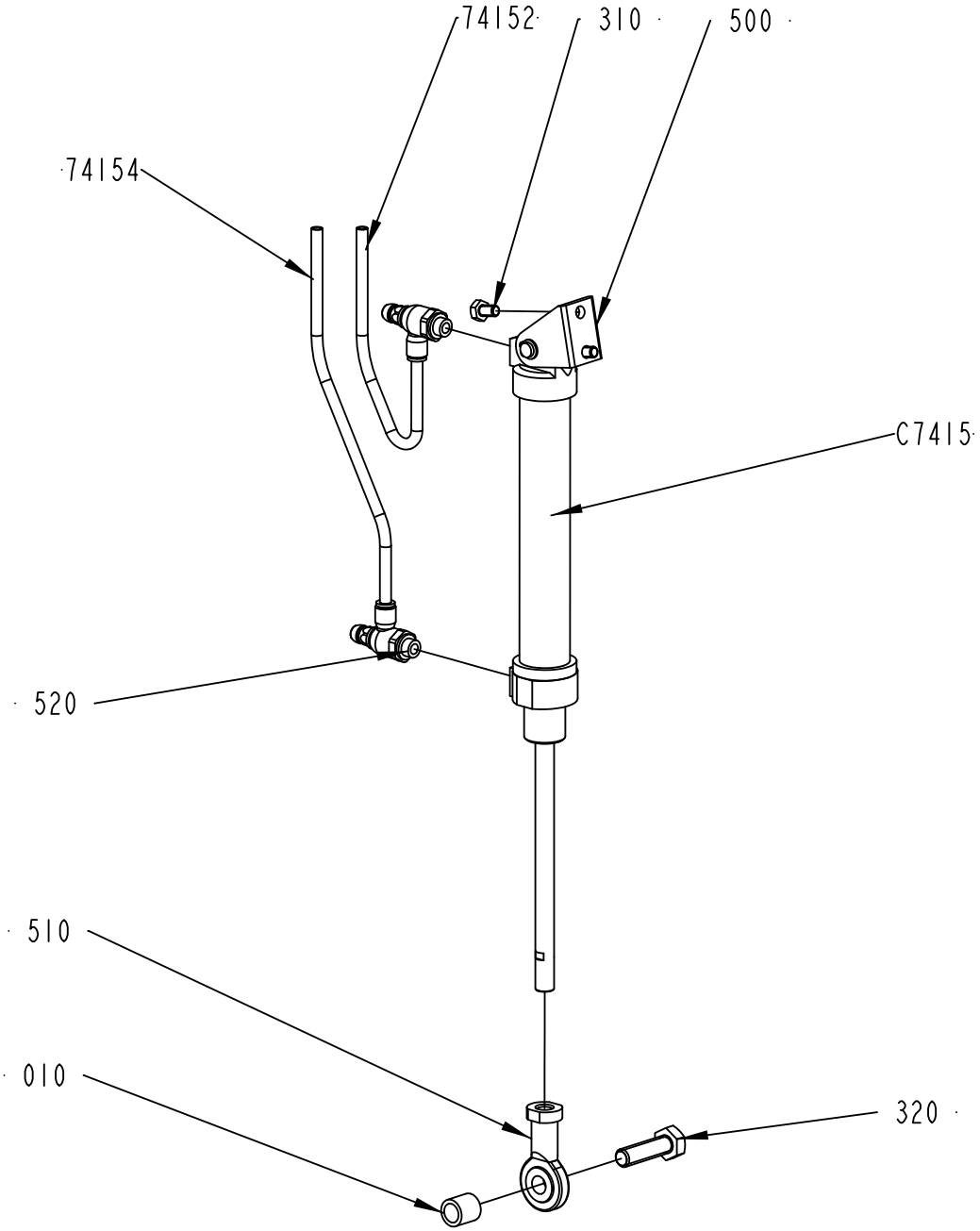

1487528-1
ECM 111238

ECM: 252904 - 20060303
Group number: 1487528-0100
Assembly Drawing: 1487528-1_1_AE

Pos	Part No	UN	Qty	Description	Page No
A3/FLEX					
74152	90166-0193	MM	5000	TUBE 6 MM PUR BLUE	
74154	90166-0193	MM	5000	TUBE 6 MM PUR BLUE	
C7415	90239-0832		1	DOUBLE ACTING, MINI-ISO, CYL. 25-125	
Common Parts					
010	1511569-0000		1	SPACER	
310	312105-0364		2	SCREW M6S ISO 4017 M6X10 A480	
320	312105-0497		1	SCREW M6S ISO 4017 M10X35 A480	
500	90239-0487		1	REAR, CLEVIS, MINI-ISO 20-25	
510	90239-0405		1	ROD END,BALL JOINT EYE M10X1,25	
520	90235-0846		2	THROTTLE CHECK VALVE G1/8", MANUAL, 6	

Pos	Part No	UN	Qty	Description	Page No

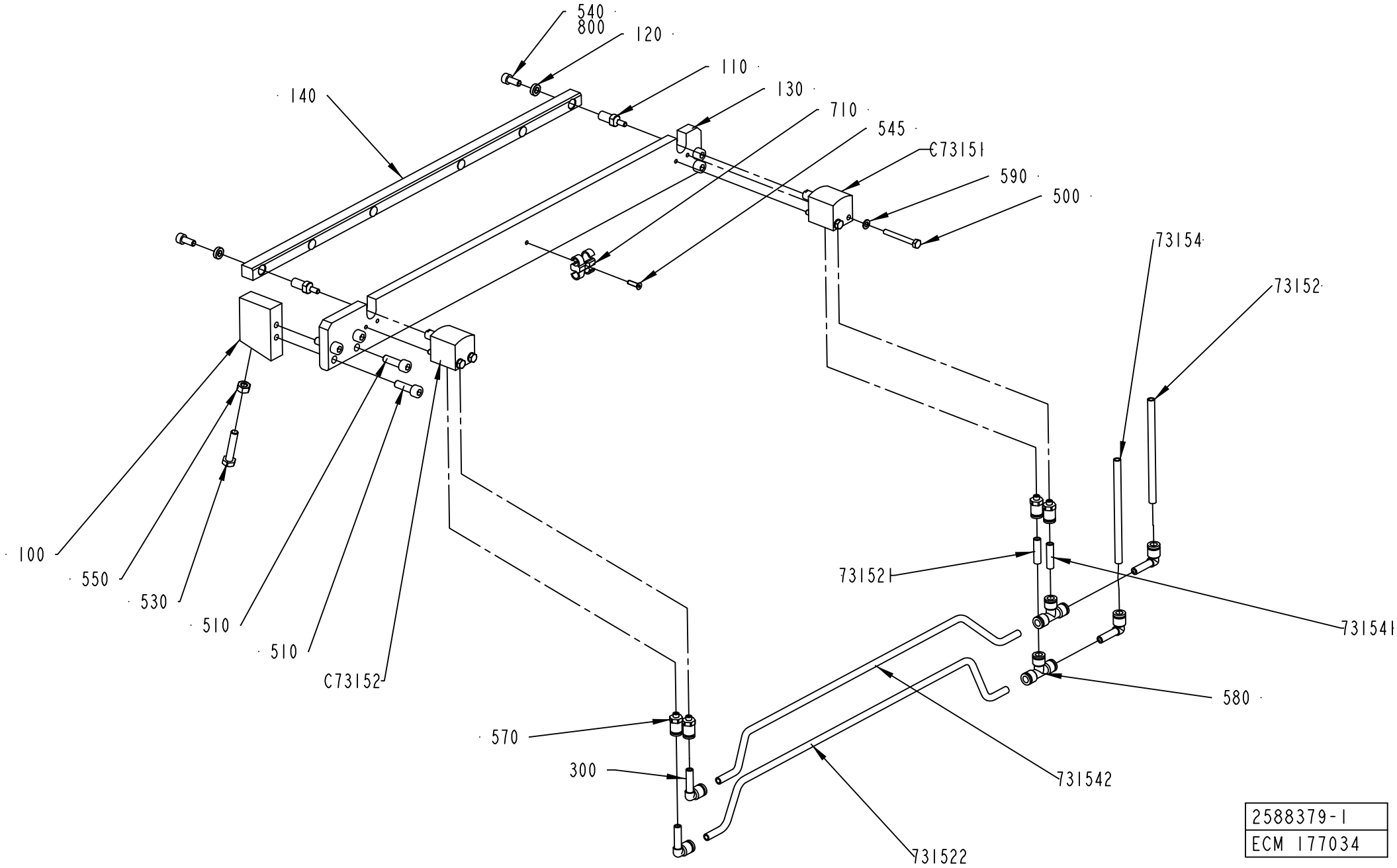
540
800
120
110
130
710
545
C73151
590
500
140
73154
73152
100
550
530
510
510
C73152
73152I
731541
580
570
300
731542
731522
2588379-1
ECM 177034

ECM: 180663 - 20041025
Group number: 2588379-0100
Assembly Drawing: 2588379-1_1_AD

Pos	Part No	UN	Qty	Description	Page No
-					
100	2553272-0000		1	SUPPORT BLOCK	
110	2553273-0000		2	AXLE PIN	
120	2553799-0000		2	WASHER	
130	2582558-0000		1	BASE PLATE	
140	2582559-0000		1	RAIL	
300	90055-0217		4	ELBOW PIPE JOINT	
500	312105-0301		4	SCREW M6S ISO 4017 M4X35 A470	
510	312115-0370		6	SCREW ISO4762 M6X20 A4 80	
530	312109-0374		1	SCREW M6S ISO 4017 M6X30 A480	
540	312115-0327		2	SCREW ISO4762 M5X12 A4 80	
545	312155-0226		1	SCREW DIN 7991 MF6S M3X12 A4 70	
550	312605-0316		1	HEXAGON NUT, M6M M6 A280	
570	342722-0197		4	STRAIGHT COUPLING	
580	342748-0102		2	T-CONNECTION 6MM	
590	315105-0136		4	WASHER BRB 4,3X8 RFR	
710	90165-0087		1	T-CLIP T6 FOR TUBE D=6 - 7 MM	
73152	90166-0193	MM	5500	TUBE 6 MM PUR BLUE	
731521	90166-0193	MM	30	TUBE 6 MM PUR BLUE	
731522	90166-0193	MM	400	TUBE 6 MM PUR BLUE	
73154	90166-0193	MM	5500	TUBE 6 MM PUR BLUE	
731541	90166-0193	MM	30	TUBE 6 MM PUR BLUE	
731542	90166-0193	MM	400	TUBE 6 MM PUR BLUE	
800	90157-0016	ML	1	LOCKING FLUID LOCTITE 242 50 ML	
C73151	90459-0503		1	CYLINDER, ADVC-16-10-I-P	
C73152	90459-0503		1	CYLINDER, ADVC-16-10-I-P	

Pos	Part No	UN	Qty	Description	Page No

Machine Type | Group Description | Used-In | Group Number | Page No

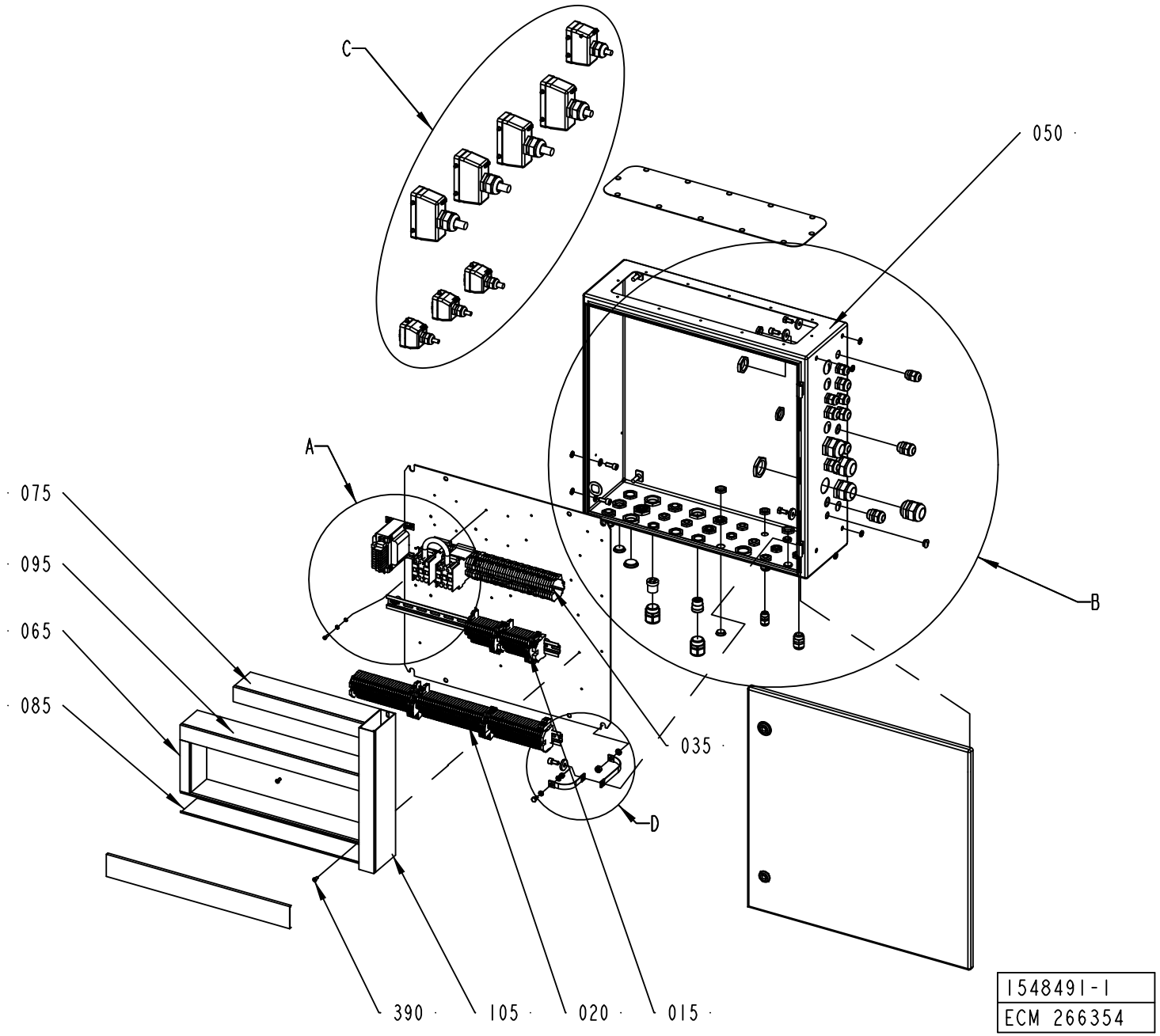
C
050
A
075
095
065
085
035
B
D
390
105
020
015
1548491-1
ECM 266354

ECM: 998017 - 20090401
Group number: 1548491-0200
Assembly Drawing: 1548491-1_1_AE

This list covers pages from 8-198 to 8-217

Pos	Part No	UN	Qty	Description	Page No
A3/FLEX SEPROOM WITH ARL (See drawing on pages: 8-208, 8-210, 8-212, 8-214, 8-216)					
180	352103-0101		4	CABLE GLAND, ST 9, PR15,2/PG9	
190	352103-0106		15	CABLE GLAND, ST 11, PR18,6/PG11	
200	352103-0111		9	CABLE GLAND, ST 16, PR22,5/PG16	
210	352103-0110		1	CABLE GLAND, STR 16, PR22,5/PG16	
230	353240-0005		4	GLAND W/O INSERT PG21 NORMAL	
240	353249-0051		2	INSERT, MULTI HOLE, E154M4X6	
250	90002-0004		5	BLANK-OFF PLUG, PR 22,5 SKINDICHT-BLK16	
260	90002-0009		1	BLANK-OFF PLUG, PR 18.6 SKINDICHT-BLK11	
270	90002-0012		2	BLANK-OFF PLUG, PR 28,3 SKINDICHT-BLK21	
280	90002-0013		1	BLANK-OFF PLUG, PR 15,2 SKINDICHT-BLK9	
W7004	351150-0413	M	10.3	CABLE OLFLEX 4GX1,5 MM2 LIGHT/GREY	
W7005	351150-0412	M	10.2	CABLE OLFLEX 3X1,5 MM2 LIGHT/GREY	
W7006	351150-0425	M	11.4	CABLE OLFLEX 25X0,75 MM2 LIGHT/GREY	
W7007	351150-0425	M	11.5	CABLE OLFLEX 25X0,75 MM2 LIGHT/GREY	
W7008	351150-0425	M	11.3	CABLE OLFLEX 25X0,75 MM2 LIGHT/GREY	
W7009	351150-0425	M	11	CABLE OLFLEX 25X0,75 MM2 LIGHT/GREY	
W7037	351150-0415	M	11	CABLE OLFLEX 7X1,5 MM2 LIGHT/GREY	
W7076	90220-0104	M	11.1	SCR. CABLE 4X1,5MM2	
X134	90110-0159		1	MALE INSERT 70.310.0640.0	
X213	90110-0150		1	MALE INSERT 121110 0000	
X214	90110-0150		1	MALE INSERT 121110 0000	
X219	90110-0150		1	MALE INSERT 121110 0000	
A3/FLEX SEPROOM WITHOUT ARL (See drawing on pages: 8-198, 8-200, 8-202, 8-204, 8-206)					
180	352103-0101		3	CABLE GLAND, ST 9, PR15,2/PG9	
190	352103-0106		12	CABLE GLAND, ST 11, PR18,6/PG11	
200	352103-0111		9	CABLE GLAND, ST 16, PR22,5/PG16	
210	352103-0115		1	CABLE GLAND, STR 21, PR28,3/PG21	
230	353240-0005		3	GLAND W/O INSERT PG21 NORMAL	
240	353249-0051		1	INSERT, MULTI HOLE, E154M4X6	
250	90002-0004		6	BLANK-OFF PLUG, PR 22,5 SKINDICHT-BLK16	
260	90002-0009		4	BLANK-OFF PLUG, PR 18.6 SKINDICHT-BLK11	
270	90002-0012		3	BLANK-OFF PLUG, PR 28,3 SKINDICHT-BLK21	
280	90002-0013		2	BLANK-OFF PLUG, PR 15,2 SKINDICHT-BLK9	
W7004	351150-0413	M	10.3	CABLE OLFLEX 4GX1,5 MM2 LIGHT/GREY	
W7005	351150-0412	M	10.2	CABLE OLFLEX 3X1,5 MM2 LIGHT/GREY	
W7006	351150-0425	M	11.4	CABLE OLFLEX 25X0,75 MM2 LIGHT/GREY	
W7007	351150-0425	M	11.5	CABLE OLFLEX 25X0,75 MM2 LIGHT/GREY	
W7008	351150-0425	M	11.3	CABLE OLFLEX 25X0,75 MM2 LIGHT/GREY	
W7009	351150-0425	M	11	CABLE OLFLEX 25X0,75 MM2 LIGHT/GREY	
W7037	351150-0415	M	11	CABLE OLFLEX 7X1,5 MM2 LIGHT/GREY	
W7076	90220-0104	M	11.1	SCR. CABLE 4X1,5MM2	

Pos	Part No	UN	Qty	Description	Page No
X134	90110-0159		1	MALE INSERT 70.310.0640.0	
X213	90110-0150		1	MALE INSERT 121110 0000	
X214	90110-0150		1	MALE INSERT 121110 0000	
X219	90110-0150		1	MALE INSERT 121110 0000	
A3/FLEX ASU WITH ARL (See drawing on pages: 8-208, 8-210, 8-212, 8-214, 8-216)					
180	352103-0101		4	CABLE GLAND, ST 9, PR15,2/PG9	
190	352103-0106		15	CABLE GLAND, ST 11, PR18,6/PG11	
200	352103-0111		9	CABLE GLAND, ST 16, PR22,5/PG16	
210	352103-0110		1	CABLE GLAND, STR 16, PR22,5/PG16	
230	353240-0005		4	GLAND W/O INSERT PG21 NORMAL	
240	353249-0051		2	INSERT, MULTI HOLE, E154M4X6	
250	90002-0004		5	BLANK-OFF PLUG, PR 22,5 SKINDICHT-BLK16	
260	90002-0009		1	BLANK-OFF PLUG, PR 18.6 SKINDICHT-BLK11	
270	90002-0012		2	BLANK-OFF PLUG, PR 28,3 SKINDICHT-BLK21	
280	90002-0013		1	BLANK-OFF PLUG, PR 15,2 SKINDICHT-BLK9	
W7004	351150-0413	M	6	CABLE OLFLEX 4GX1,5 MM2 LIGHT/GREY	
W7005	351150-0412	M	5.9	CABLE OLFLEX 3X1,5 MM2 LIGHT/GREY	
W7006	351150-0425	M	7.1	CABLE OLFLEX 25X0,75 MM2 LIGHT/GREY	
W7007	351150-0425	M	7.2	CABLE OLFLEX 25X0,75 MM2 LIGHT/GREY	
W7008	351150-0425	M	7.2	CABLE OLFLEX 25X0,75 MM2 LIGHT/GREY	
W7009	351150-0425	M	6.7	CABLE OLFLEX 25X0,75 MM2 LIGHT/GREY	
W7037	351150-0415	M	6	CABLE OLFLEX 7X1,5 MM2 LIGHT/GREY	
W7076	90220-0104	M	6.8	SCR. CABLE 4X1,5MM2	
X134	90110-0159		1	MALE INSERT 70.310.0640.0	
X213	90110-0150		1	MALE INSERT 121110 0000	
X214	90110-0150		1	MALE INSERT 121110 0000	
X219	90110-0150		1	MALE INSERT 121110 0000	
A3/FLEX ASU WITHOUT ARL (See drawing on pages: 8-198, 8-200, 8-202, 8-204, 8-206)					
180	352103-0101		3	CABLE GLAND, ST 9, PR15,2/PG9	
190	352103-0106		12	CABLE GLAND, ST 11, PR18,6/PG11	
200	352103-0111		9	CABLE GLAND, ST 16, PR22,5/PG16	
210	352103-0115		1	CABLE GLAND, STR 21, PR28,3/PG21	
230	353240-0005		3	GLAND W/O INSERT PG21 NORMAL	
240	353249-0051		1	INSERT, MULTI HOLE, E154M4X6	
250	90002-0004		6	BLANK-OFF PLUG, PR 22,5 SKINDICHT-BLK16	
260	90002-0009		4	BLANK-OFF PLUG, PR 18.6 SKINDICHT-BLK11	
270	90002-0012		3	BLANK-OFF PLUG, PR 28,3 SKINDICHT-BLK21	
280	90002-0013		2	BLANK-OFF PLUG, PR 15,2 SKINDICHT-BLK9	
W7004	351150-0413	M	6	CABLE OLFLEX 4GX1,5 MM2 LIGHT/GREY	
W7005	351150-0412	M	5.9	CABLE OLFLEX 3X1,5 MM2 LIGHT/GREY	
W7006	351150-0425	M	7.1	CABLE OLFLEX 25X0,75 MM2 LIGHT/GREY	
W7007	351150-0425	M	7.2	CABLE OLFLEX 25X0,75 MM2 LIGHT/GREY	

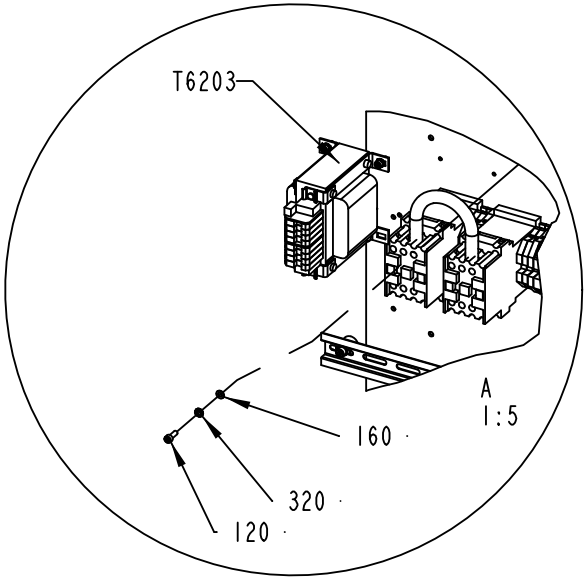
T6203
A
1:5
160
320
120

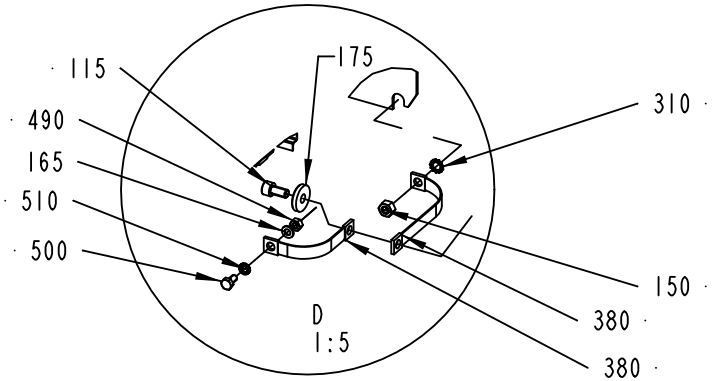
115
175
310
490
165
510
500
150
380
380
D
1:5

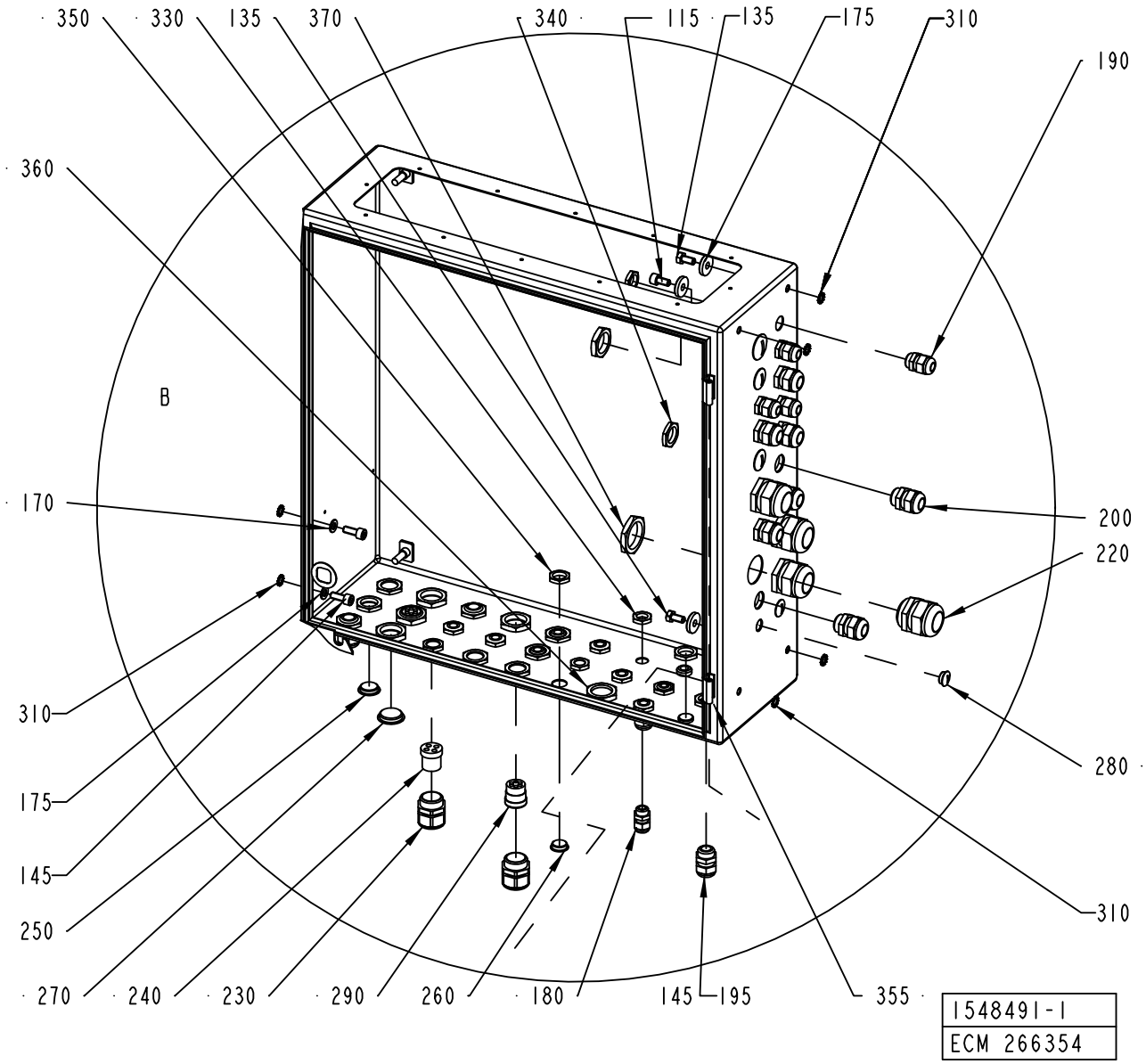
350
330
135
370
340
115
135
175
310
190
360
B
170
200
220
310
280
175
145
250
310
270
240
230
290
260
180
145
195
355
1548491-1
ECM 266354

ECM: 998017 - 20090401
Group number: 1548491-0200
Assembly Drawing: 1548491-1_2_AE

This list covers pages from 8-198 to 8-217

Pos	Part No	UN	Qty	Description	Page No
A3/FLEX ASU WITHOUT ARL (Cont'd) (See drawing on pages: 8-198, 8-200, 8-202, 8-204, 8-206)					
W7008	351150-0425	M	7.2	CABLE OLFLEX 25X0,75 MM2 LIGHT/GREY	
W7009	351150-0425	M	6.7	CABLE OLFLEX 25X0,75 MM2 LIGHT/GREY	
W7037	351150-0415	M	6	CABLE OLFLEX 7X1,5 MM2 LIGHT/GREY	
W7076	90220-0104	M	6.8	SCR. CABLE 4X1,5MM2	
X134	90110-0159		1	MALE INSERT 70.310.0640.0	
X213	90110-0150		1	MALE INSERT 121110 0000	
X214	90110-0150		1	MALE INSERT 121110 0000	
X219	90110-0150		1	MALE INSERT 121110 0000	
Common Parts					
015	2611462-0100		1	TERMINAL BLOCK	**8-219, 8-221**
020	1548496-0100		1	TERMINAL	**8-223, 8-225**
035	2611463-0100		1	TERMINAL BLOCK	**8-227, 8-229**
050	1548492-0000		1	ELECTRICAL CABINET	
065	2611461-0000		1	CABLE DUCT	
075	2611458-0000		1	CABLE DUCT	
085	2611460-0000		1	CABLE DUCT	
095	2611459-0000		1	CABLE DUCT	
105	2611457-0000		1	CABLE DUCT	
115	312115-0449		2	SCREW ISO4762 M8X16 A4 80	
120	312115-0291		4	SCREW ISO4762 M4X12 A4 80	
135	312105-0449		2	SCREW M6S ISO 4017 M8X16 A480	
145	312115-0451		2	SCREW ISO4762 M8X20 A4 80	
150	312605-0318		1	HEXAGON NUT, M6M M8 A280	
160	315105-0136		4	WASHER BRB 4,3X8 RFR	
165	315105-0153		1	WASHER BRB 6,4X12 RFR	
170	315105-0165		2	WASHER BRB 8,4X16 RFR	
175	315125-0165		4	WASHER TBRSB 8,4X26X5 A4	
195	352103-0108		4	CABLE GLAND, ST 13,5 , PR20,4/PG13,5	
220	352103-0121		8	CABLE GLAND, ST 29, PR37,0/PG29	
290	90012-0125		2	GLAND FITTING	
310	90062-0016		7	LOCK WASHER SERRAT.EXT.GEAR,8,4/15 H=0,8	
320	90062-0059		4	LOCK WASKER SERRAT.EXT.GEAR,4,3/8 H=0,5	
330	90099-0104		5	NUT, PR 15,2 (PG9)	
340	90099-0110		18	NUT, PR 22,5 (PG16)	
350	90099-0117		12	NUT, PR 18,6 (PG11)	
355	90099-0118		2	NUT, PR 20,4 (PG13,5)	
360	90099-0119		6	NUT, PR 28,3 (PG21)	
370	90099-0120		4	NUT, PR 37 (PG29)	
380	90135-0040		2	EARTH WIRE, L=150 MM 16 MM2	
390	90181-0313		12	RIVET DUCTAFIX R4	
400	359005-0010		9	MARKING LABEL KIT 0 - 9, 04.841.2150.0	
410	359005-0050		1	MARKING LABEL KIT X, 04.841.4550.0	
440	90110-0152		4	CABLE HOOD 24-POL 70.352.2428.1	
450	90110-0157		3	CABLE HOOD 6-POL 70.352.0628.1	
460	90110-0385		8	MARKING HOLDER, 4.242.3853.0	
470	90110-0160		1	CABLE HOOD 6-16-POL 70.352.1628.1	
490	312605-0316		1	HEXAGON NUT, M6M M6 A280	
500	312105-0366		1	SCREW M6S ISO 4017 M6X12 A480	
510	90062-0015		1	LOCK WASHER SERRAT.EXT.GEAR,6,4/11 H=0,7	
T6203	90458-0258		1	TRANSFORMER, 220VAC/6-9-12VAC	
X132	90110-0159		1	MALE INSERT 70.310.0640.0	
X133	90110-0159		1	MALE INSERT 70.310.0640.0	
X220	90110-0150		1	MALE INSERT 121110 0000	
X504	90110-0156		1	MALE INSERT 70.210.0653.0	

Machine Type	Group Description	Used-In	Group Number	Page No

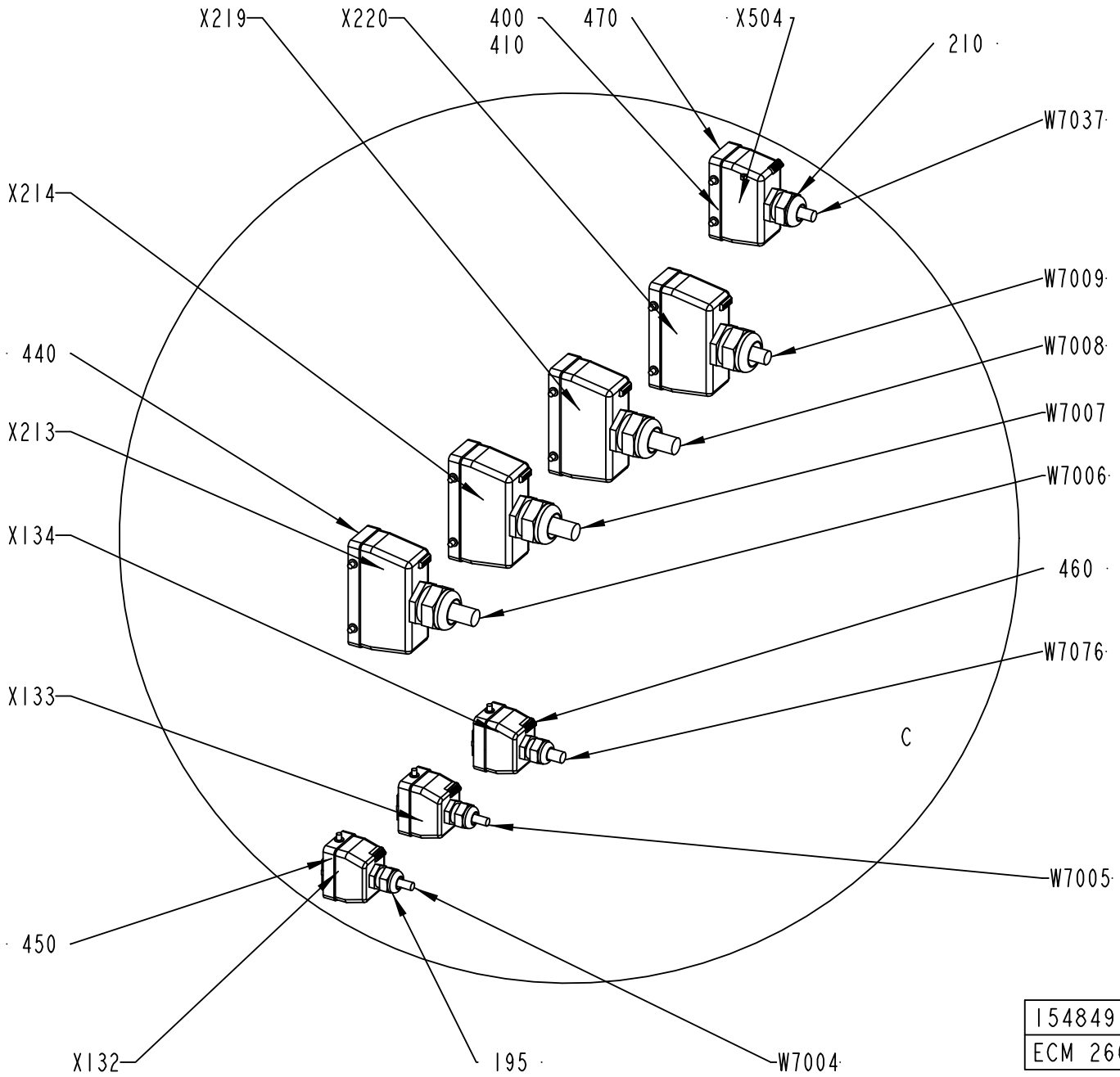

1548491-1
ECM 266354

ECM: 998017 - 20090401
Group number: 1548491-0200
Assembly Drawing: 1548491-1_3_AE

This list covers pages from 8-198 to 8-217

Pos	Part No	UN	Qty	Description	Page No
SEE PREVIOUS LISTS PAGES: 8-199, 8-201.					

Pos	Part No	UN	Qty	Description	Page No

Machine Type | Group Description | Used-In | Group Number | Page No

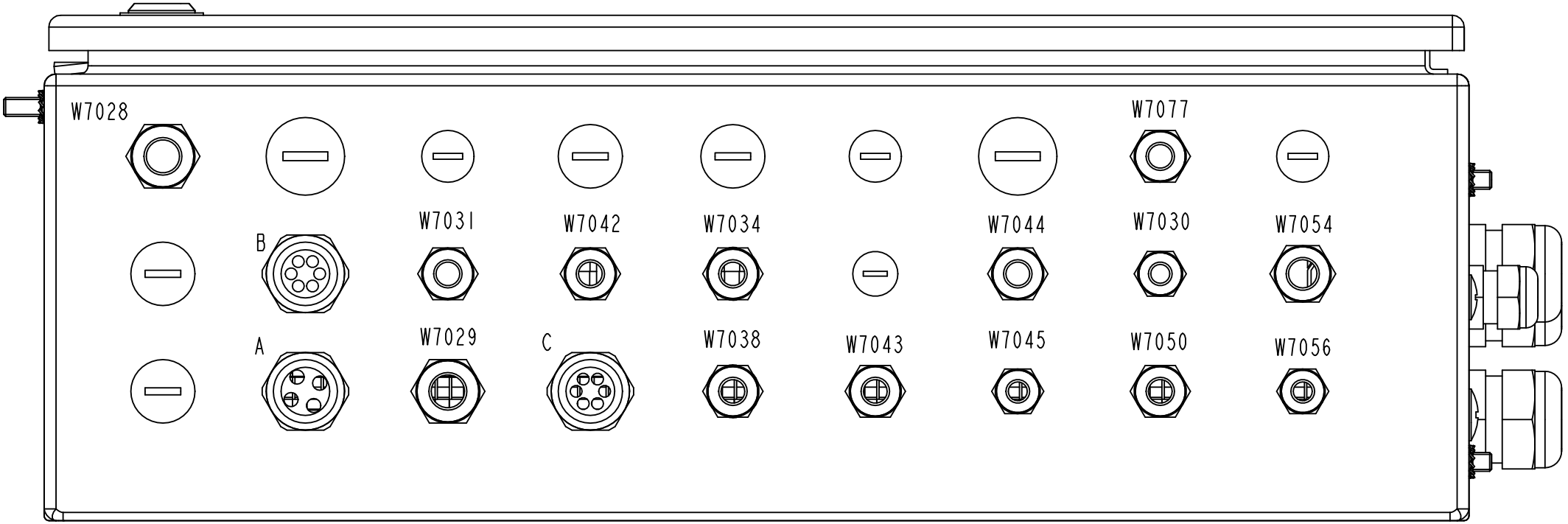

A*	B*	C*
W7016	W7020	W7015
W7017	W7023	W7019
W7018	W7024	W7013
W7022	W7025	W7033
	W7026	W7035
	W7027	W7036

1548491-1
ECM 266354

ECM: 998017 - 20090401
Group number: 1548491-0200
Assembly Drawing: 1548491-1_4_AE

This list covers pages from 8-198 to 8-217

Pos	Part No	UN	Qty	Description	Page No

SEE PREVIOUS LISTS PAGES: 8-199, 8-201.

Pos	Part No	UN	Qty	Description	Page No

ELECTRICAL CABINET

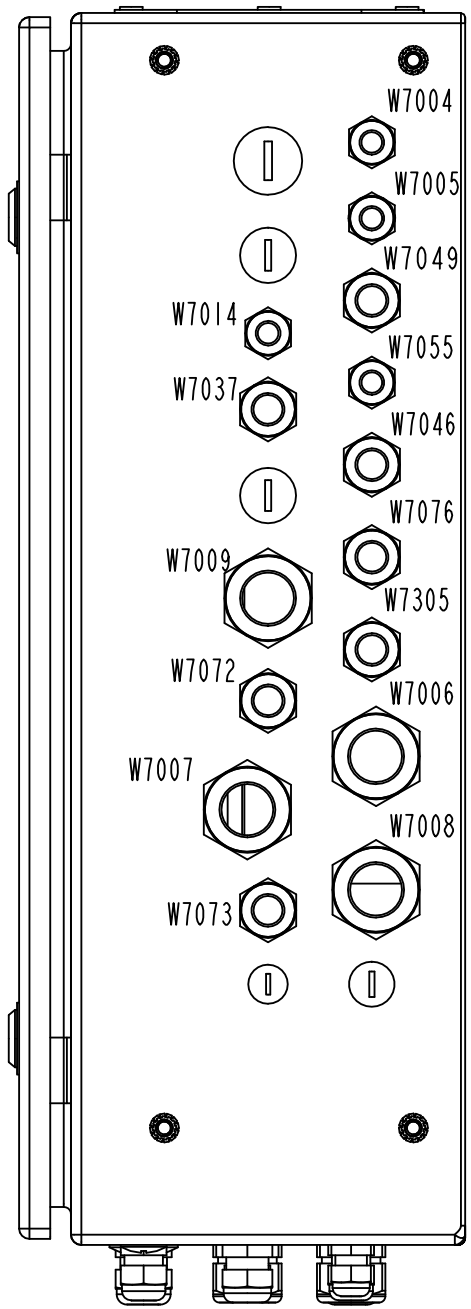

1548491-1
ECM 266354

ECM: 998017 - 20090401
Group number: 1548491-0200
Assembly Drawing: 1548491-1_5_AE

This list covers pages from 8-198 to 8-217

Pos	Part No	UN	Qty	Description	Page No
SEE PREVIOUS LISTS PAGES: 8-199, 8-201.					

Pos	Part No	UN	Qty	Description	Page No

Machine Type | Group Description | Used-In | Group Number | Page No

ELECTRICAL CABINET

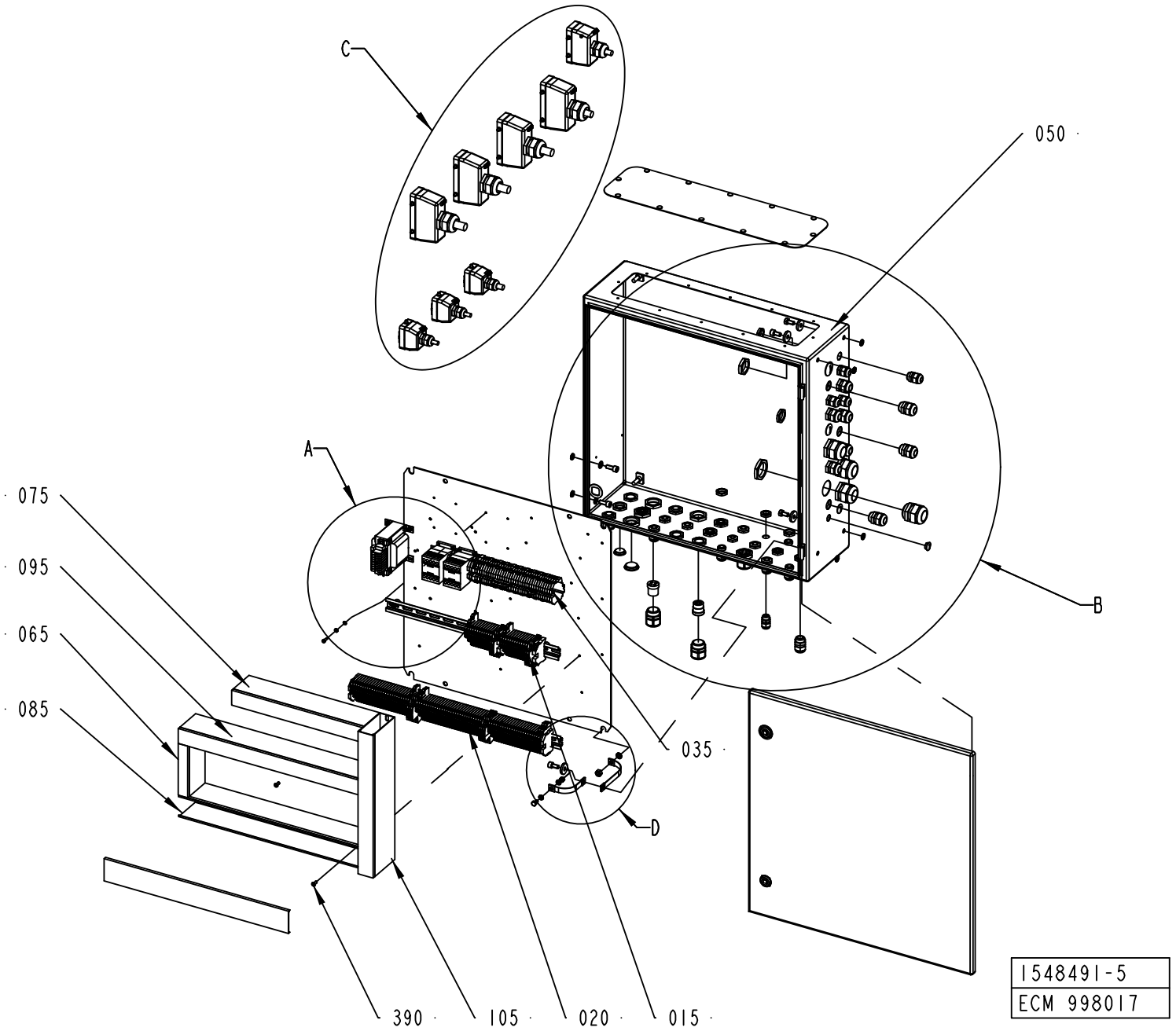

ECM: 998017 - 20090401
Group number: 1548491-0200
Assembly Drawing: 1548491-5_1_AA

This list covers pages from 8-198 to 8-217

Pos	Part No	UN	Qty	Description	Page No
SEE PREVIOUS LISTS PAGES: 8-199, 8-201.					

Pos	Part No	UN	Qty	Description	Page No

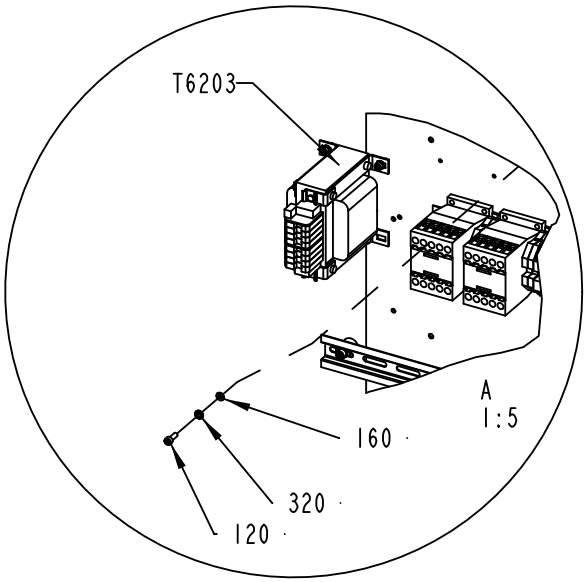
T6203
A
1:5
160
320
120

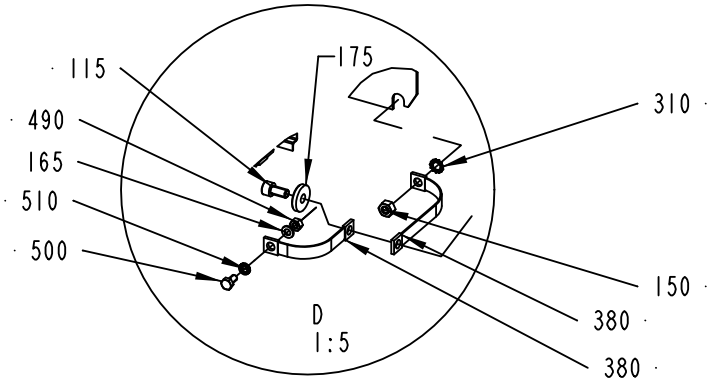
115
175
310
490
165
510
500
150
380
380
D
1:5

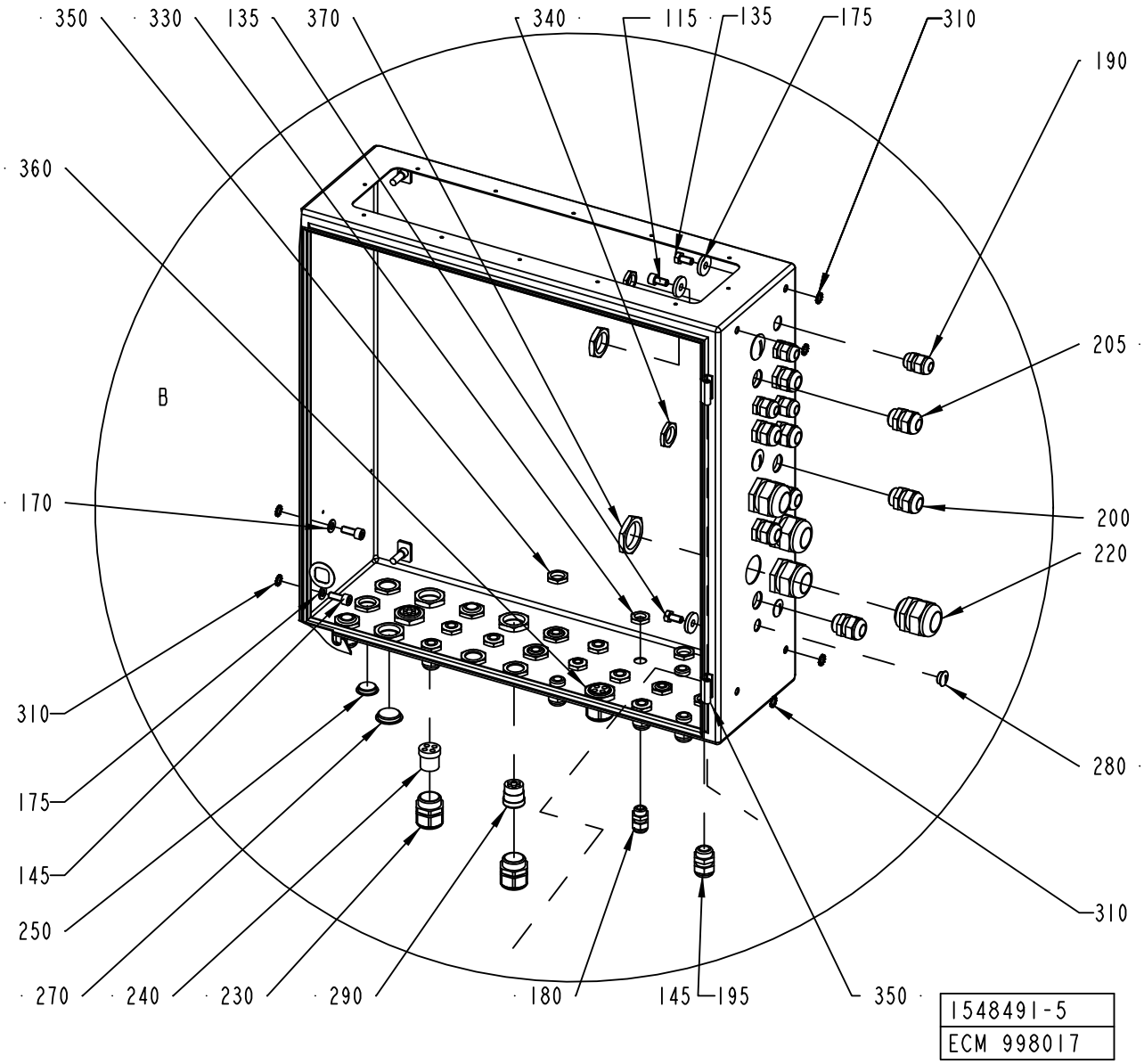
350
330
135
370
340
115
135
175
310
190
360
B
205
200
220
170
310
280
175
145
250
310
270
240
230
290
180
145
195
350
1548491-5
ECM 998017

ECM: 998017 - 20090401
Group number: 1548491-0200
Assembly Drawing: 1548491-5_2_AA

This list covers pages from 8-198 to 8-217

Pos	Part No	UN	Qty	Description	Page No
SEE PREVIOUS LISTS PAGES: 8-199, 8-201.					

Pos	Part No	UN	Qty	Description	Page No

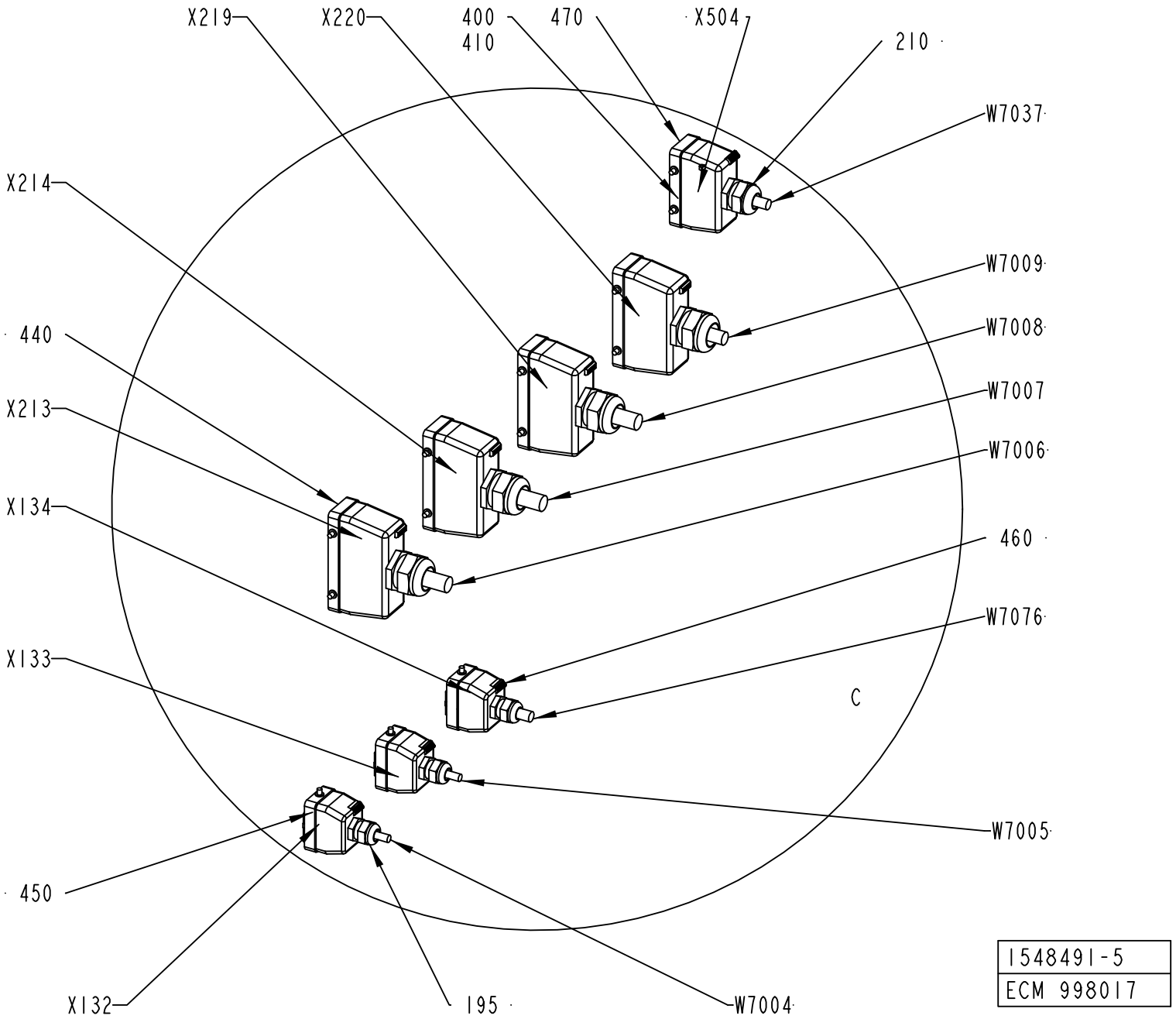
X219
X220
400
410
470
X504
210
W7037
X214
W7009
440
W7008
X213
W7007
X134
W7006
460
W7076
X133
C
W7005
450
X132
195
W7004
1548491-5
ECM 998017

ECM: 998017 - 20090401
Group number: 1548491-0200
Assembly Drawing: 1548491-5_3_AA

This list covers pages from 8-198 to 8-217

Pos	Part No	UN	Qty	Description	Page No
SEE PREVIOUS LISTS PAGES: 8-199, 8-201.					

Pos	Part No	UN	Qty	Description	Page No

ELECTRICAL CABINET

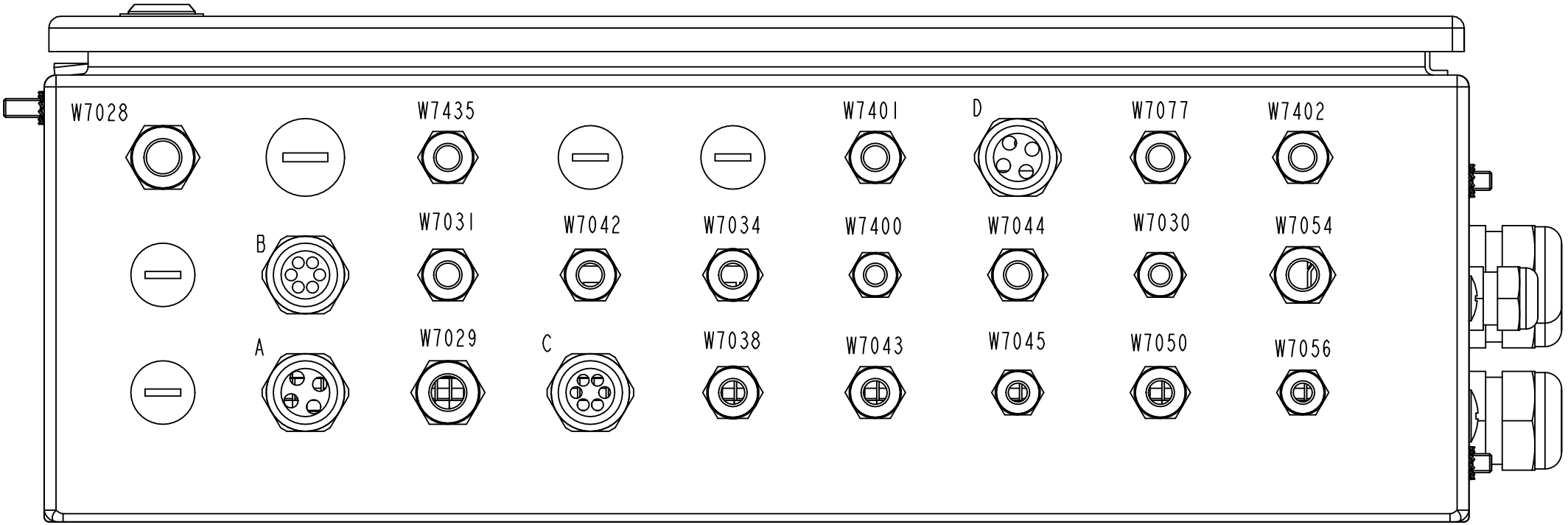

A*	B*	C*	D*
W7016	W7020	W7015	W7430
W7017	W7023	W7019	W7431
W7018	W7024	W7013	W7432
W7022	W7025	W7033	W7433
	W7026	W7035	
	W7027	W7036	

1548491-5
ECM 998017

ECM: 998017 - 20090401
Group number: 1548491-0200
Assembly Drawing: 1548491-5_4_AA

This list covers pages from 8-198 to 8-217

Pos	Part No	UN	Qty	Description	Page No
SEE PREVIOUS LISTS PAGES: 8-199, 8-201.					

Pos	Part No	UN	Qty	Description	Page No

ELECTRICAL CABINET

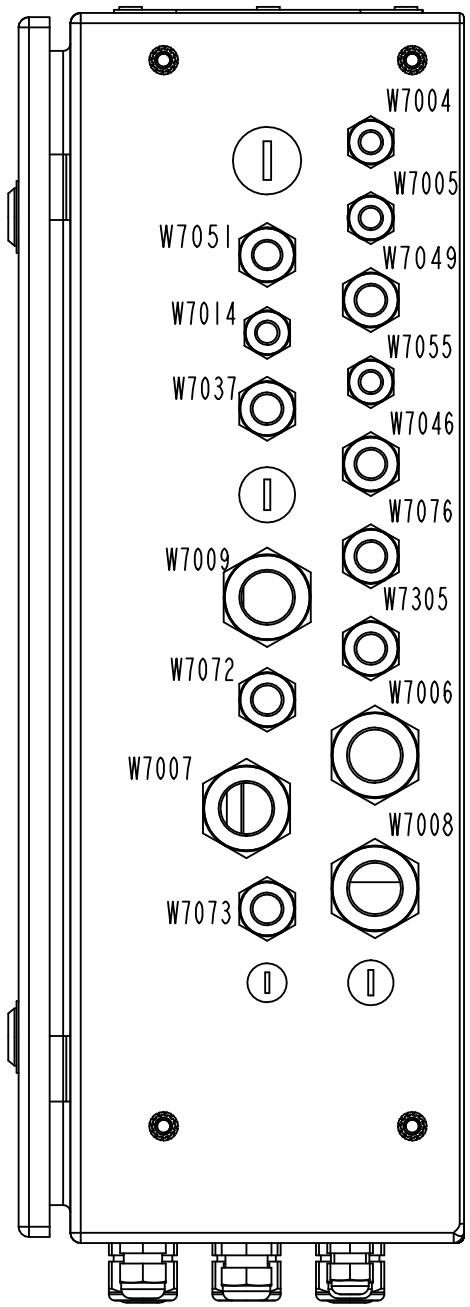

1548491-5
ECM 998017

Pos	Part No	UN	Qty	Description	Page No
SEE PREVIOUS LISTS PAGES: 8-199, 8-201.					

Pos	Part No	UN	Qty	Description	Page No

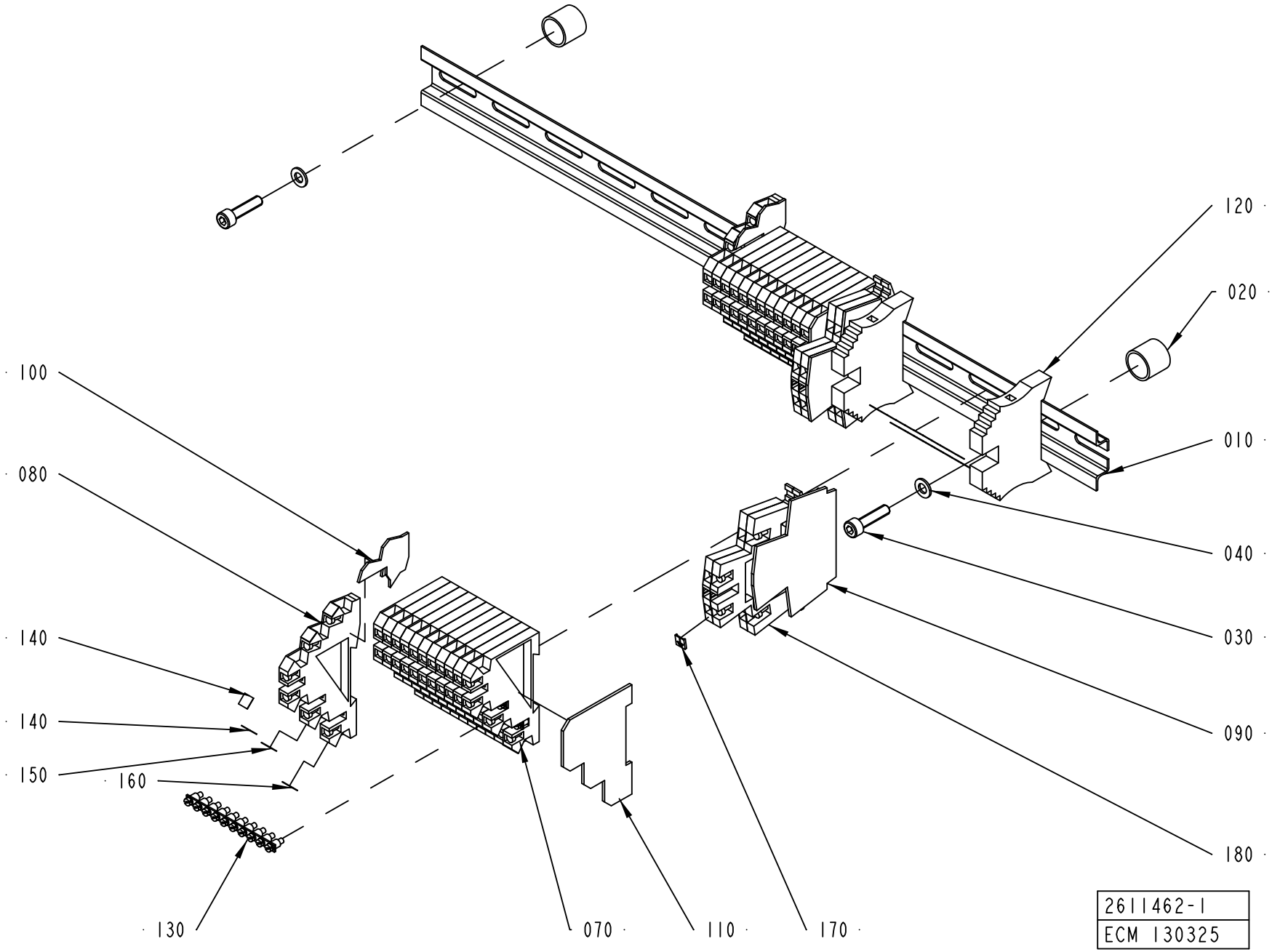
120
020
010
040
030
090
180
100
080
140
140
150
160
130
070
110
170
2611462-1
ECM 130325

ECM: 180665 - 20041005
Group number: 2611462-0100
Assembly Drawing: 2611462-1_1_AA

This list covers pages from 8-218 to 8-221

Pos	Part No	UN	Qty	Description	Page No
-					
010	2611464-0000		1	RAIL	
020	495118-0014		2	DISTANCE PIPE L=14 MM	
030	312115-0331		2	SCREW ISO4762 M5X20 A4 80	
040	315105-0146		2	WASHER BRB 5,3X10 RFR	
070	353021-0301		22	TERMINALS,TRIPLE-LEVEL, DLI 2,5/35 PA	
080	353021-0302		2	TERMINALS,TRIPLE-LEVEL, DLD 2,5/35 PA	
090	353032-0009		2	END PLATE, WAP FOR WDK	
100	353032-0013		2	END PLATE, 13818.6	
110	353032-0301		2	END PLATE WAP, 13132.6	
120	353031-0203		2	END SUPPORT, WEW 35/2	
130	353034-0404		4	BRIDGE CONNECTOR Q10, 13131.0	
140	359011-0824		2	SET OF SIGNS 6-FW 151-200	
150	359011-0832		26	SET OF SIGNS 6-GW (+)	
160	359011-0833		26	SET OF SIGNS 6-GW (-)	
170	359011-0834		1	SET OF SIGNS 6-GW(EARTH)	
180	90458-1136		4	TERMINAL BLOCK, 103630	
190	359011-0825		2	SET OF SIGNS 6-FW 201-250	

Pos	Part No	UN	Qty	Description	Page No

TERMINAL BLOCK

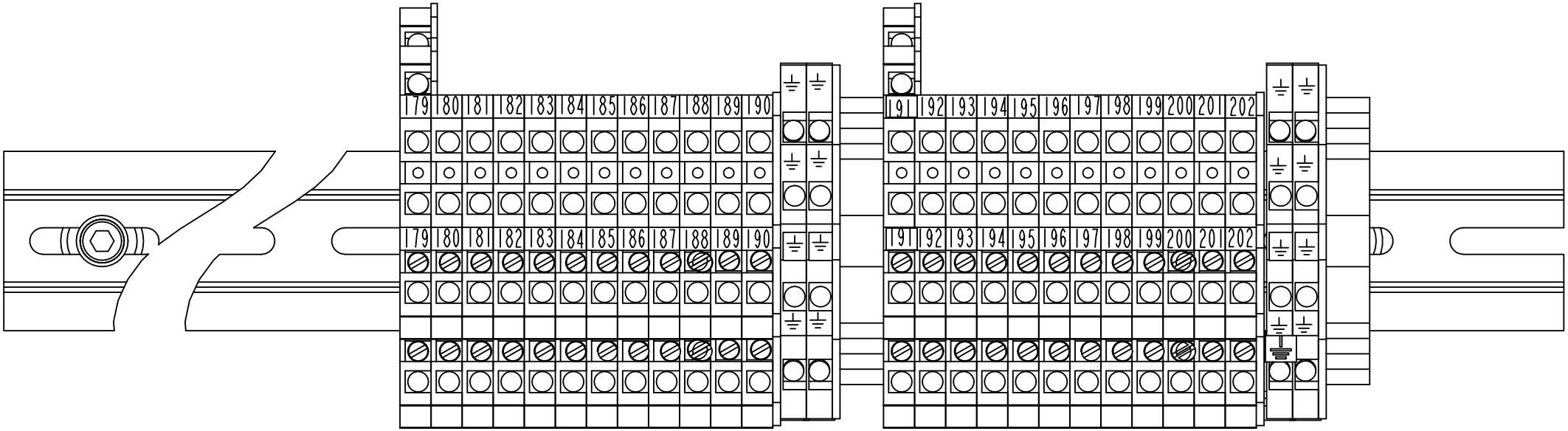

2611462-1
ECM 130325

ECM: 180665 - 20041005
Group number: 2611462-0100
Assembly Drawing: 2611462-1_2_AA

This list covers pages from 8-218 to 8-221

Pos	Part No	UN	Qty	Description	Page No
-					
010	2611464-0000		1	RAIL	
020	495118-0014		2	DISTANCE PIPE L=14 MM	
030	312115-0331		2	SCREW ISO4762 M5X20 A4 80	
040	315105-0146		2	WASHER BRB 5,3X10 RFR	
070	353021-0301		22	TERMINALS,TRIPLE-LEVEL, DLI 2,5/35 PA	
080	353021-0302		2	TERMINALS,TRIPLE-LEVEL, DLD 2,5/35 PA	
090	353032-0009		2	END PLATE, WAP FOR WDK	
100	353032-0013		2	END PLATE, 13818.6	
110	353032-0301		2	END PLATE WAP, 13132.6	
120	353031-0203		2	END SUPPORT, WEW 35/2	
130	353034-0404		4	BRIDGE CONNECTOR Q10, 13131.0	
140	359011-0824		2	SET OF SIGNS 6-FW 151-200	
150	359011-0832		26	SET OF SIGNS 6-GW (+)	
160	359011-0833		26	SET OF SIGNS 6-GW (-)	
170	359011-0834		1	SET OF SIGNS 6-GW(EARTH)	
180	90458-1136		4	TERMINAL BLOCK, 103630	
190	359011-0825		2	SET OF SIGNS 6-FW 201-250	

Pos	Part No	UN	Qty	Description	Page No

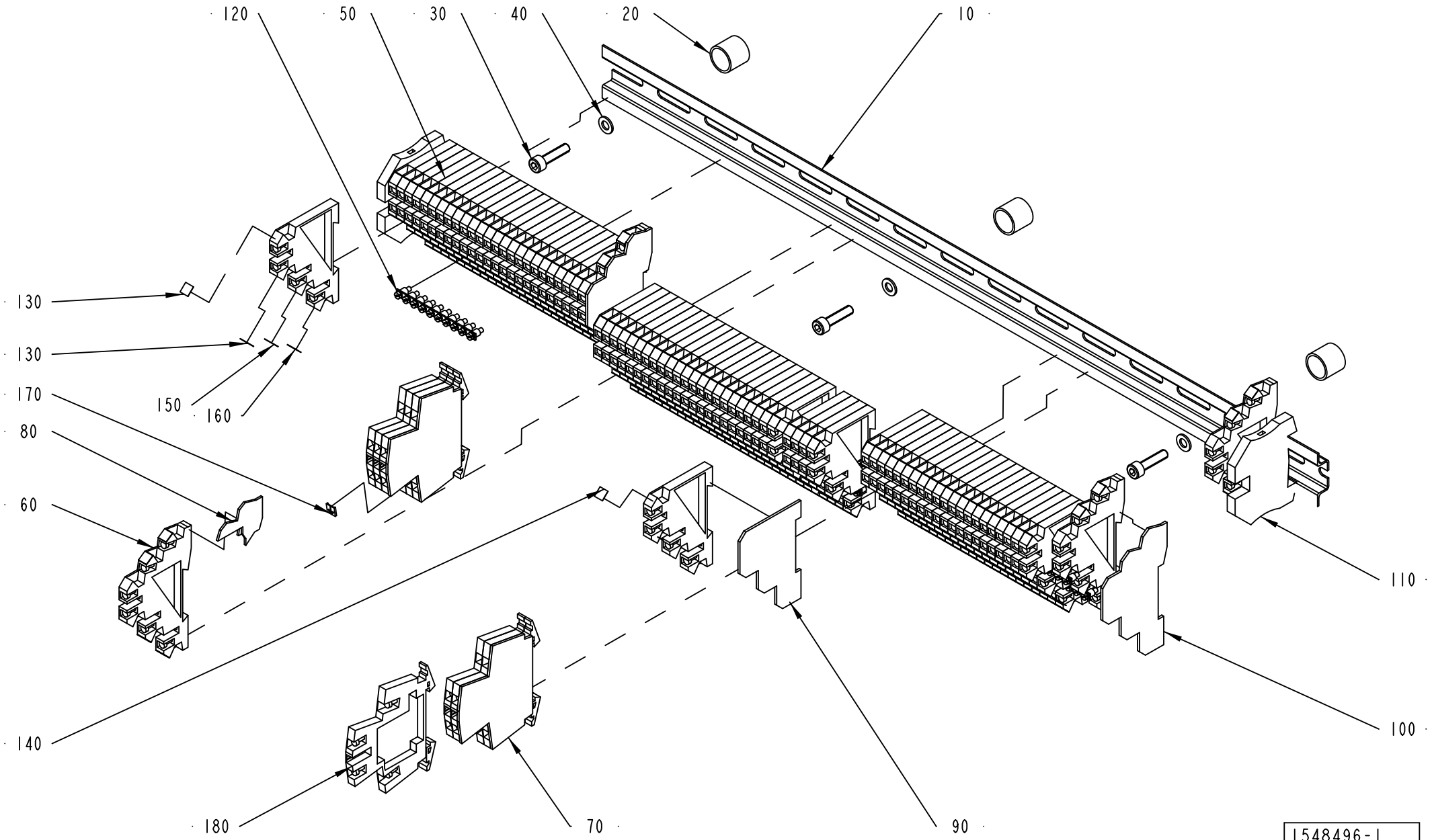
120
50
30
40
20
10
130
130
170
80
60
150
160
140
180
70
90
110
100
1548496-1
ECM 130325

ECM: 224785 - 20050831
Group number: 1548496-0100
Assembly Drawing: 1548496-1_1_AB

This list covers pages from 8-222 to 8-225

Pos	Part No	UN	Qty	Description	Page No
-					
010	2503654-0000		1	RAIL	
020	495118-0014		3	DISTANCE PIPE L=14 MM	
030	312115-0331		3	SCREW ISO4762 M5X20 A4 80	
040	315105-0146		3	WASHER BRB 5,3X10 RFR	
050	353021-0301		74	TERMINALS,TRIPLE-LEVEL, DLI 2,5/35 PA	
060	353021-0302		4	TERMINALS,TRIPLE-LEVEL, DLD 2,5/35 PA	
070	353032-0009		2	END PLATE, WAP FOR WDK	
080	353032-0013		1	END PLATE, 13818.6	
090	353032-0301		1	END PLATE WAP, 13132.6	
100	353032-0302		2	END PLATE, AP DLD2,5 DB	
110	353024-0205		2	EARTH TERMINAL, 1010.1	
120	353034-0404		17	BRIDGE CONNECTOR Q10, 13131.0	
130	359011-0823		2	SET OF SIGNS 6-FW 101-150	
140	359011-0824		2	SET OF SIGNS 6-FW 151-200	
150	359011-0832		2	SET OF SIGNS 6-GW (+)	
160	359011-0833		2	SET OF SIGNS 6-GW (-)	
170	359011-0834		1	SET OF SIGNS 6-GW(EARTH)	
180	90458-1136		6	TERMINAL BLOCK, 103630	

Pos	Part No	UN	Qty	Description	Page No

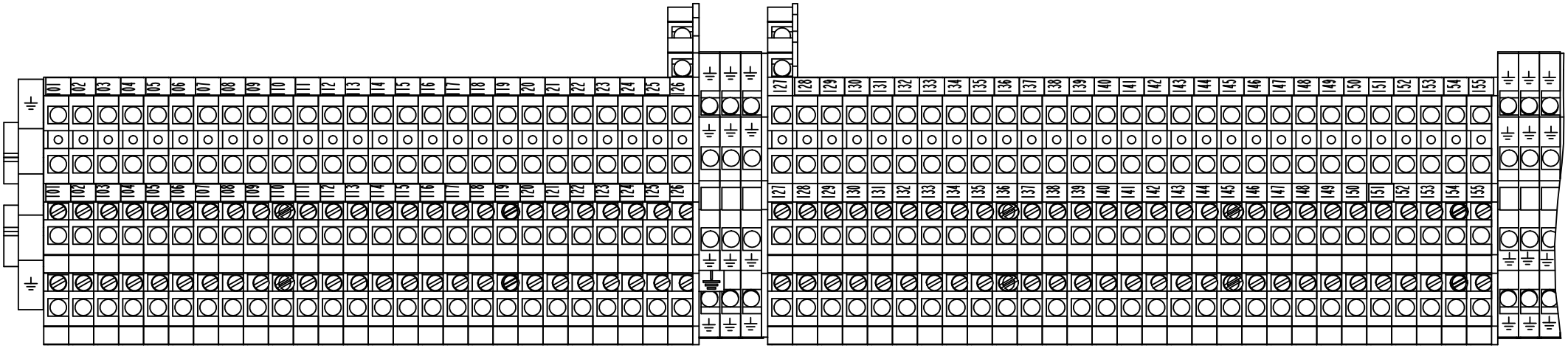

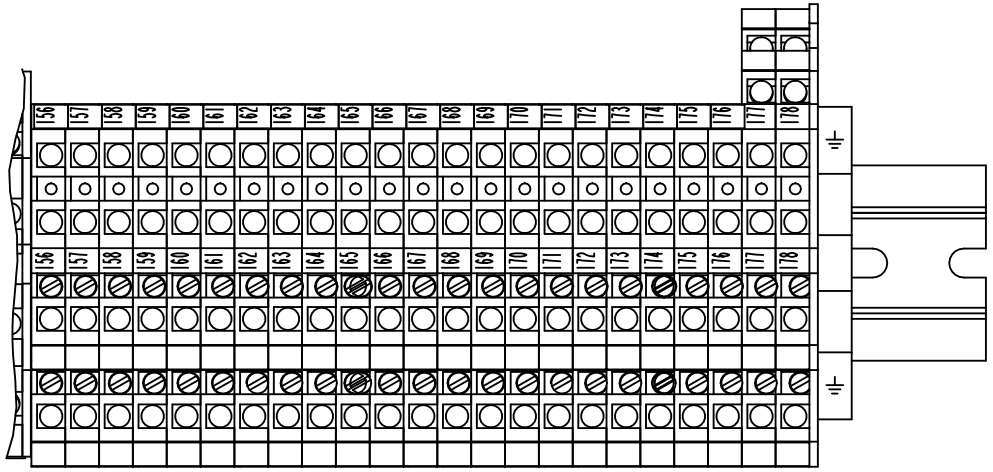

1548496-1
ECM 130325

ECM: 224785 - 20050831
Group number: 1548496-0100
Assembly Drawing: 1548496-1_2_AB

This list covers pages from 8-222 to 8-225

Pos	Part No	UN	Qty	Description	Page No
-					
010	2503654-0000		1	RAIL	
020	495118-0014		3	DISTANCE PIPE L=14 MM	
030	312115-0331		3	SCREW ISO4762 M5X20 A4 80	
040	315105-0146		3	WASHER BRB 5,3X10 RFR	
050	353021-0301		74	TERMINALS,TRIPLE-LEVEL, DLI 2,5/35 PA	
060	353021-0302		4	TERMINALS,TRIPLE-LEVEL, DLD 2,5/35 PA	
070	353032-0009		2	END PLATE, WAP FOR WDK	
080	353032-0013		1	END PLATE, 13818.6	
090	353032-0301		1	END PLATE WAP, 13132.6	
100	353032-0302		2	END PLATE, AP DLD2,5 DB	
110	353024-0205		2	EARTH TERMINAL, 1010.1	
120	353034-0404		17	BRIDGE CONNECTOR Q10, 13131.0	
130	359011-0823		2	SET OF SIGNS 6-FW 101-150	
140	359011-0824		2	SET OF SIGNS 6-FW 151-200	
150	359011-0832		2	SET OF SIGNS 6-GW (+)	
160	359011-0833		2	SET OF SIGNS 6-GW (-)	
170	359011-0834		1	SET OF SIGNS 6-GW(EARTH)	
180	90458-1136		6	TERMINAL BLOCK, 103630	

Pos	Part No	UN	Qty	Description	Page No

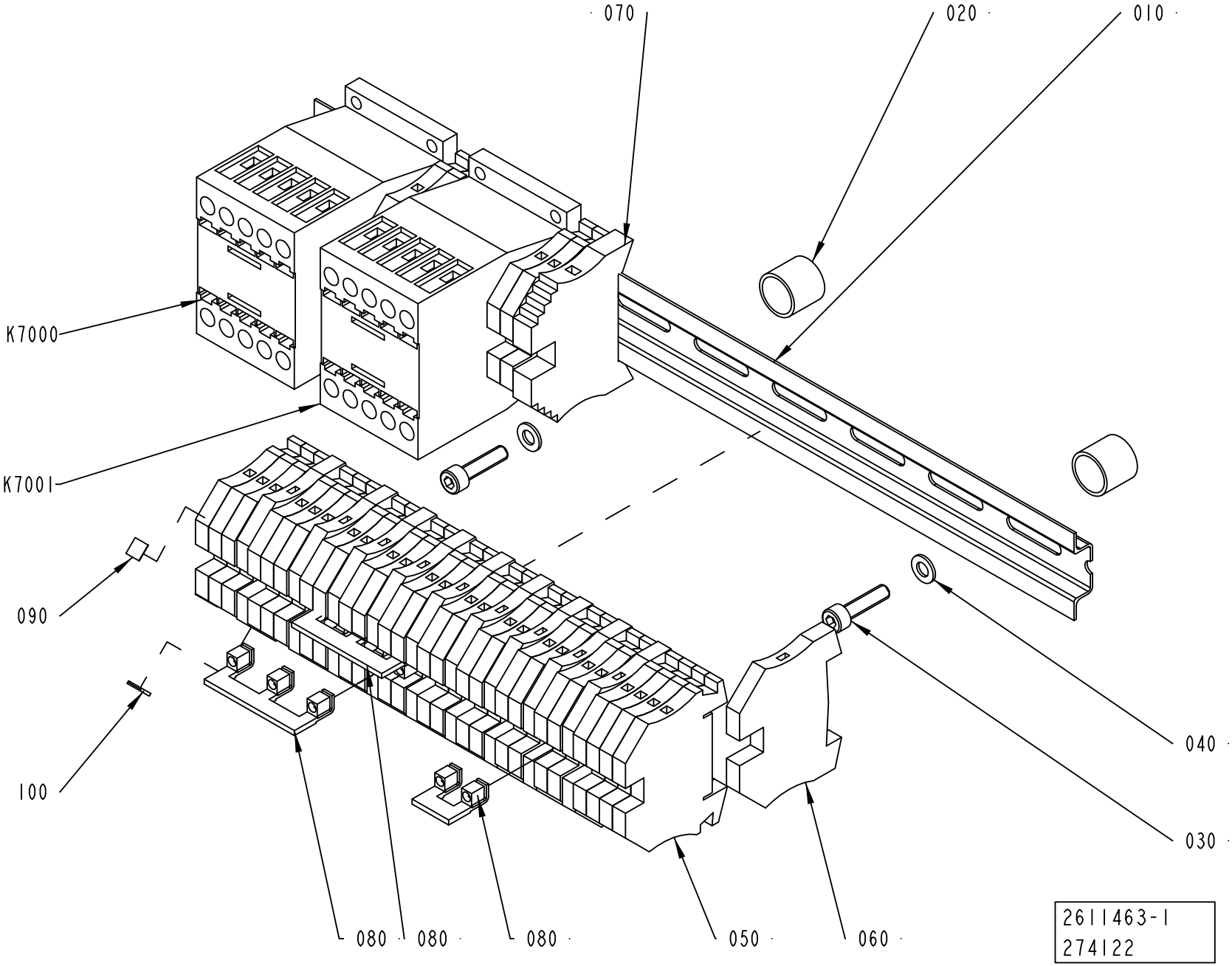
070
020
010
K7000
K7001
090
100
040
030
080
080
080
050
060
2611463-1
274122

ECM: 274124 - 20061101
Group number: 2611463-0100
Assembly Drawing: 2611463-1_1_AC

This list covers pages from 8-226 to 8-229

Pos	Part No	UN	Qty	Description	Page No
-					
010	2611465-0000		1	RAIL	
020	495118-0014		2	DISTANCE PIPE L=14 MM	
030	312115-0331		2	SCREW ISO4762 M5X20 A4 80	
040	315105-0146		2	WASHER BRB 5,3X10 RFR	
050	353021-0213		28	FEED THROUGH TERMINAL, 10201.0	
060	353024-0205		10	EARTH TERMINAL, 1010.1	
070	353031-0203		1	END SUPPORT, WEW 35/2	
080	353034-0031		3	BRIDGE CONNECTOR, WQV 4/10, 10520.6	
090	359011-0821		2	SET OF SIGNS 6-FW 1-50	
100	359011-0834		1	SET OF SIGNS 6-GW(EARTH)	
K7000	90459-5440		1	CONTACTOR 4KW 24VDC, DILM9-01	
K7001	90459-5440		1	CONTACTOR 4KW 24VDC, DILM9-01	

Pos	Part No	UN	Qty	Description	Page No

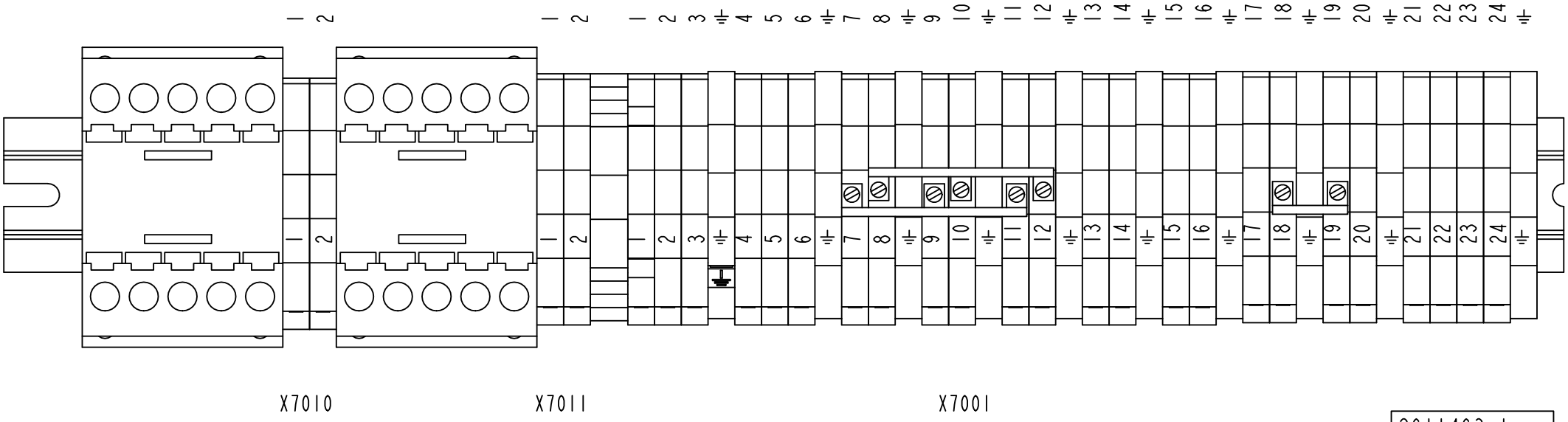
X7010
X7011
X7001
2611463-1
274122

ECM: 274124 - 20061101
Group number: 2611463-0100
Assembly Drawing: 2611463-1_2_AC

This list covers pages from 8-226 to 8-229

Pos	Part No	UN	Qty	Description	Page No
-					
010	2611465-0000		1	RAIL	
020	495118-0014		2	DISTANCE PIPE L=14 MM	
030	312115-0331		2	SCREW ISO4762 M5X20 A4 80	
040	315105-0146		2	WASHER BRB 5,3X10 RFR	
050	353021-0213		28	FEED THROUGH TERMINAL, 10201.0	
060	353024-0205		10	EARTH TERMINAL, 1010.1	
070	353031-0203		1	END SUPPORT, WEW 35/2	
080	353034-0031		3	BRIDGE CONNECTOR, WQV 4/10, 10520.6	
090	359011-0821		2	SET OF SIGNS 6-FW 1-50	
100	359011-0834		1	SET OF SIGNS 6-GW(EARTH)	
K7000	90459-5440		1	CONTACTOR 4KW 24VDC, DILM9-01	
K7001	90459-5440		1	CONTACTOR 4KW 24VDC, DILM9-01	

Pos	Part No	UN	Qty	Description	Page No

VALVE PANEL

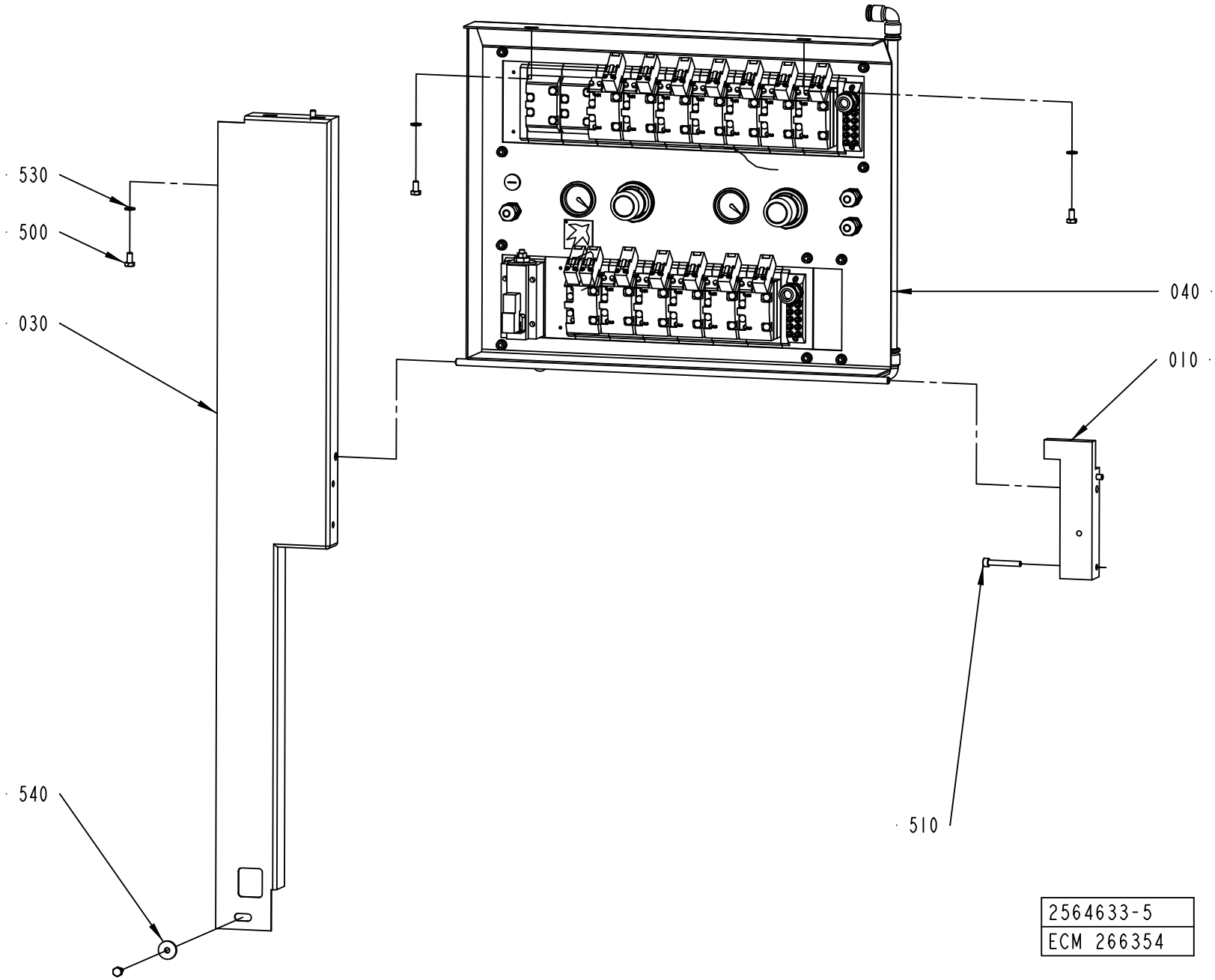

ECM: 267322 - 20061101
Group number: 2564633-0100
Assembly Drawing: 2564633-5_1_AA

This list covers pages from 8-230 to 8-233

Pos	Part No	UN	Qty	Description	Page No
A3/FLEX WITH ARL (See drawing on page: 8-232)					
050	2742200-0100		1	VALVE PANEL	**8-235**
500	312105-0366		5	SCREW M6S ISO 4017 M6X12 A480	
530	315105-0153		4	WASHER BRB 6,4X12 RFR	
A3/FLEX WITHOUT ARL (See drawing on page: 8-230)					
500	312105-0366		5	SCREW M6S ISO 4017 M6X12 A480	
530	315105-0153		4	WASHER BRB 6,4X12 RFR	
Common Parts					
010	2564634-0000		1	BEARING BLOCK	
030	2570836-0000		1	PROTECTION PLATE	
040	2564632-0100		1	VALVE PANEL	**8-237, 8-239**
510	312115-0378		2	SCREW ISO4762 M6X40 A4 80	
540	315125-0153		1	WASHER TBRSB 6,4X22X4 A4	

Pos	Part No	UN	Qty	Description	Page No

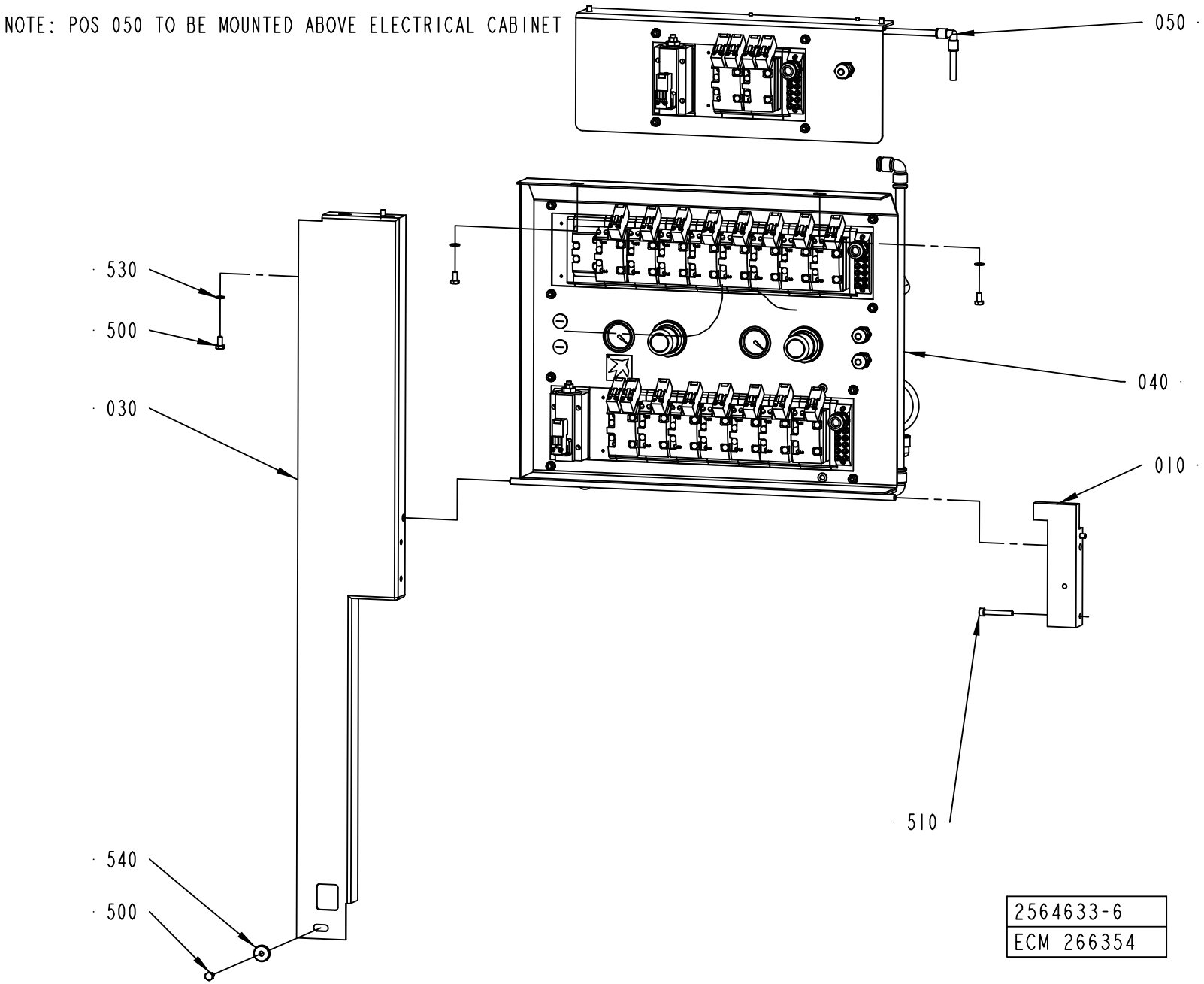
NOTE: POS 050 TO BE MOUNTED ABOVE ELECTRICAL CABINET
050
530
500
040
030
010
510
540
500
2564633-6
ECM 266354

ECM: 267322 - 20061101
Group number: 2564633-0100
Assembly Drawing: 2564633-6_1_AA

This list covers pages from 8-230 to 8-233

Pos	Part No	UN	Qty	Description	Page No
A3/FLEX WITH ARL (See drawing on page: 8-232)					
050	2742200-0100		1	VALVE PANEL	**8-235**
500	312105-0366		5	SCREW M6S ISO 4017 M6X12 A480	
530	315105-0153		4	WASHER BRB 6,4X12 RFR	
A3/FLEX WITHOUT ARL (See drawing on page: 8-230)					
500	312105-0366		5	SCREW M6S ISO 4017 M6X12 A480	
530	315105-0153		4	WASHER BRB 6,4X12 RFR	
Common Parts					
010	2564634-0000		1	BEARING BLOCK	
030	2570836-0000		1	PROTECTION PLATE	
040	2564632-0100		1	VALVE PANEL	**8-237, 8-239**
510	312115-0378		2	SCREW ISO4762 M6X40 A4 80	
540	315125-0153		1	WASHER TBRSB 6,4X22X4 A4	

Pos	Part No	UN	Qty	Description	Page No

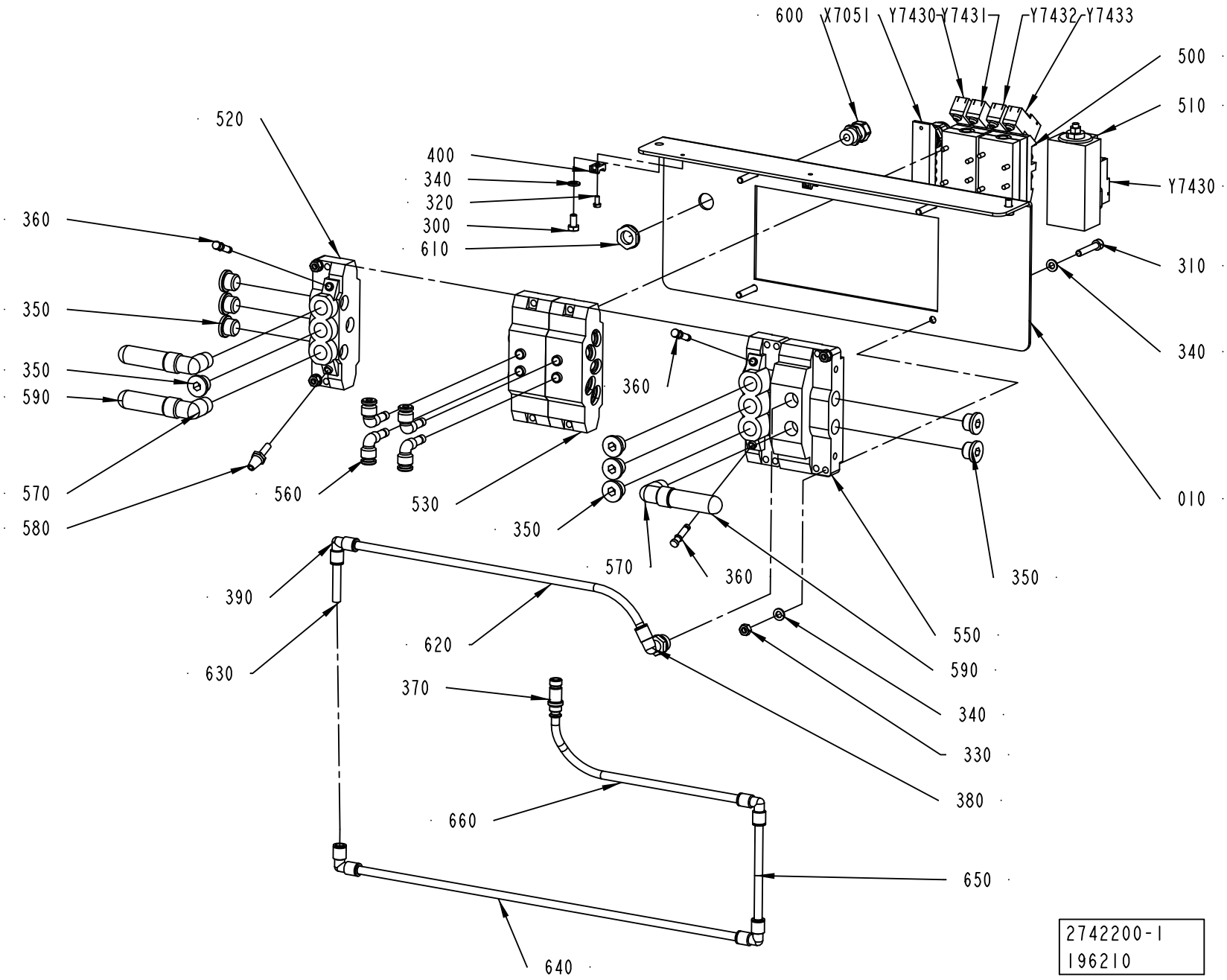
600
X7051
Y7430
Y7431
Y7432
Y7433
500
510
Y7430
310
340
010
520
400
340
320
300
610
360
350
350
590
570
580
560
530
360
350
570
360
350
550
590
340
330
380
390
620
630
370
660
650
640
2742200-1
196210

ECM: 342680 - 20080215
Group number: 2742200-0100
Assembly Drawing: 2742200-1_1_AA

Pos	Part No	UN	Qty	Description	Page No
-					
010	2742199-0000		1	BRACKET	
300	312105-0366		2	SCREW M6S ISO 4017 M6X12 A480	
310	312115-0376		4	SCREW ISO4762 M6X35 A4 80	
320	312125-0287		2	SCREW ISO 1207 M4X8 A4	
330	312605-0316		4	HEXAGON NUT, M6M M6 A280	
340	315105-0153		10	WASHER BRB 6,4X12 RFR	
350	342713-0211		9	PLUG, EXT THREAD HEX SOCKET 8638-00-380	
360	342715-0102		3	BLIND PLUG 6 MM	
370	342716-0209		1	REDUCER 8-12	
380	350002-0012		1	PUSH-IN L-FITTING QSL-F-G3/8-8	
390	350004-0003		4	PUSH-IN L-FITTING QSL-F-8	
400	352113-0205		2	ANCHOR PLATES FOR STRIPS, TYPE TM2S8-C10	
500	90042-0230		2	VALVE BODY 5/3 OPEN CENTRE	
510	90042-0265		1	HIGH SPEED VENTING VALVE 583-590-000-1	
520	90042-0522		2	PORTED END PIECE ISO SIZE 1	
530	90042-0532		2	BASE PLATE ISO SIZE 1	
550	90042-0545		1	SUB-BASE SOFT START ISO 1 AND VDMA 01	
560	90055-0173		4	ELBOW WITH TAILPIECE 8/6 MM	
570	90140-0020		3	ELBOW, 90, INT/EXT. THREAD, NO. 2020-3/8	
580	90328-0017		1	SILENCER, D=6 MM	
590	90328-0024		3	SILENCER G3/8"	
600	90458-0306		1	CABLE GLAND, M16X1,5, NO.5311 1010	
610	90458-0322		1	NUT, M16X1,5	
620	90166-0194	MM	1000	TUBE 8 MM PUR BLUE	
630	90166-0194	MM	1400	TUBE 8 MM PUR BLUE	
640	90166-0194	MM	1400	TUBE 8 MM PUR BLUE	
650	90166-0194	MM	350	TUBE 8 MM PUR BLUE	
660	90166-0068	MM	400	TUBE 12 MM PA BLUE	
X7051	90042-0535		1	TERMINAL BOARD 19 CORDS	
Y7430	90042-0539		1	PILOT VALVE L=350MM	
Y7431	90042-0539		1	PILOT VALVE L=350MM	
Y7432	90042-0539		1	PILOT VALVE L=350MM	
Y7433	90042-0539		1	PILOT VALVE L=350MM	
Y7435	90042-0539		1	PILOT VALVE L=350MM	

Pos	Part No	UN	Qty	Description	Page No

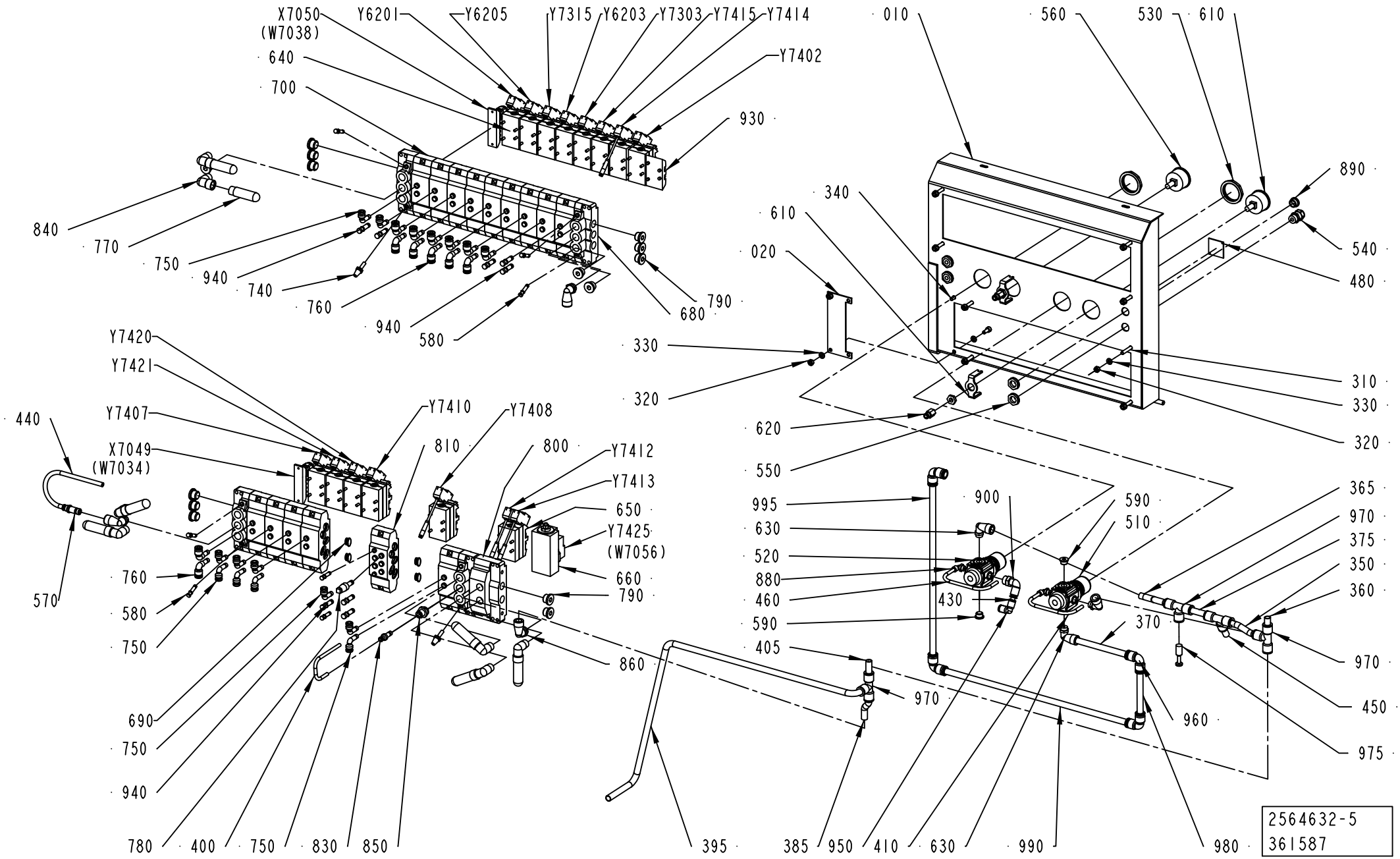
X7050
(W7038)
Y6201
Y6205
Y7315
Y6203
Y7303
Y7415
Y7414
Y7402
640
700
930
840
770
750
940
740
760
940
580
680
790
010
560
530
610
890
340
610
020
540
480
330
320
310
330
320
620
550
Y7420
Y7421
Y7407
X7049
(W7034)
440
570
760
580
750
690
750
940
780
400
750
830
850
Y7410
Y7408
810
800
Y7412
Y7413
650
Y7425
(W7056)
660
790
860
395
995
630
520
880
460
590
405
970
385
950
900
590
510
430
370
410
630
990
960
980
365
970
375
350
360
970
450
975
2564632-5
361587

ECM: 361827 - 20081001
Group number: 2564632-0100
Assembly Drawing: 2564632-5_1_AD

This list covers pages from 8-236 to 8-239

Pos	Part No	UN	Qty	Description	Page No
A3/FLEX WITH ARL (See drawing on pages: 8-236, 8-238)					
020	2616034-0000		1	COVER PLATE	
100	2691105-0000		1	PNEUMATIC DIAGRAM	
320	312605-0316		10	HEXAGON NUT, M6M M6 A280	
330	315105-0153		20	WASHER BRB 6,4X12 RFR	
340	312115-0367		2	SCREW ISO4762 M6X14 A4 80	
370	90166-0068	MM	200	TUBE 12 MM PA BLUE	
385	90166-0068	MM	100	TUBE 12 MM PA BLUE	
395	90166-0068	MM	1200	TUBE 12 MM PA BLUE	
405	90166-0068	MM	100	TUBE 12 MM PA BLUE	
450	90166-0068	MM	30	TUBE 12 MM PA BLUE	
480	273458-0000		1	SIGN, AIR	
510	90113-0470		1	MANIFOLD REGULATOR 10 BAR	
520	90457-0144		1	REGULATOR 0,3-2 BAR	
540	90458-0306		3	CABLE GLAND, M16X1,5, NO.5311 1010	
560	90043-0064		1	PRESSURE GAUGE, 2048 D=40 MM	
570	342716-0209		1	REDUCER 8-12	
580	342715-0102		7	BLIND PLUG 6 MM	
610	90043-0065		1	MKC NEW FILL PUMP VACUUM PRESSURE GAUGE	
630	90458-2959		3	ELBOW PIPE JOINT, EXT.THREAD,D=12MM-G1/4	
640	90042-0215		13	VALVE BODY 5/2 UNISTABLE	
690	90042-0528		5	BLANKING KIT SEALS ISO SIZE 1	
750	90055-0172		11	ELBOW WITH TAILPIECE 8/8 MM	
760	90055-0173		13	ELBOW WITH TAILPIECE 8/6 MM	
790	342713-0211		14	PLUG, EXT THREAD HEX SOCKET 8638-00-380	
810	90042-0520		1	BASE PLATE ISO SIZE 1	
860	90458-2960		3	ELBOW PIPE JOINT, EXT.THREAD,D=12MM-G3/8	
890	90458-1307		1	BLIND PLUG CIRCULAR, M16X1,5 514GFK/216	
900	342732-0105		1	ELBOW PIPE JOINT ,EXT.THREAD,D=8 MM R3/8	
930	90042-0519		1	BLANK PLATE ISO SIZE 1	
940	342715-0103		8	BLIND PLUG 8 MM	
970	342748-0109		4	T-CONNECTION 12MM	
990	90166-0068	MM	600	TUBE 12 MM PA BLUE	
Y6201	90042-0591		1	PILOT VALVE, 04938-333-08	
Y7402	90042-0591		1	PILOT VALVE, 04938-333-08	
Y7415	90042-0538		1	PILOT VALVE L=500MM	
Y7425	90042-0585		1	PILOT VALVE L=5M	
A3/FLEX WITHOUT ARL (See drawing on pages: 8-236, 8-238)					
020	2616034-0000		1	COVER PLATE	
100	2982570-0000		1	PNEUMATIC DIAGRAM	
320	312605-0316		10	HEXAGON NUT, M6M M6 A280	
330	315105-0153		20	WASHER BRB 6,4X12 RFR	
340	312115-0367		2	SCREW ISO4762 M6X14 A4 80	
370	90166-0068	MM	200	TUBE 12 MM PA BLUE	
385	90166-0068	MM	100	TUBE 12 MM PA BLUE	
395	90166-0068	MM	1200	TUBE 12 MM PA BLUE	
405	90166-0068	MM	100	TUBE 12 MM PA BLUE	
450	90166-0068	MM	30	TUBE 12 MM PA BLUE	
480	273458-0000		1	SIGN, AIR	
510	90113-0470		1	MANIFOLD REGULATOR 10 BAR	
520	90457-0144		1	REGULATOR 0,3-2 BAR	
540	90458-0306		3	CABLE GLAND, M16X1,5, NO.5311 1010	
560	90043-0064		1	PRESSURE GAUGE, 2048 D=40 MM	
570	342716-0209		1	REDUCER 8-12	
580	342715-0102		7	BLIND PLUG 6 MM	
610	90043-0065		1	MKC NEW FILL PUMP VACUUM PRESSURE GAUGE	
630	90458-2959		3	ELBOW PIPE JOINT, EXT.THREAD,D=12MM-G1/4	
640	90042-0215		13	VALVE BODY 5/2 UNISTABLE	
690	90042-0528		5	BLANKING KIT SEALS ISO SIZE 1	
750	90055-0172		11	ELBOW WITH TAILPIECE 8/8 MM	
760	90055-0173		13	ELBOW WITH TAILPIECE 8/6 MM	
790	342713-0211		14	PLUG, EXT THREAD HEX SOCKET 8638-00-380	
810	90042-0520		1	BASE PLATE ISO SIZE 1	
860	90458-2960		3	ELBOW PIPE JOINT, EXT.THREAD,D=12MM-G3/8	
890	90458-1307		1	BLIND PLUG CIRCULAR, M16X1,5 514GFK/216	
900	342732-0105		1	ELBOW PIPE JOINT ,EXT.THREAD,D=8 MM R3/8	
930	90042-0519		1	BLANK PLATE ISO SIZE 1	
940	342715-0103		8	BLIND PLUG 8 MM	
970	342748-0109		4	T-CONNECTION 12MM	
975	350013-0005		1	PLUG QSC-12H	
990	90166-0068	MM	600	TUBE 12 MM PA BLUE	
Y6201	90042-0591		1	PILOT VALVE, 04938-333-08	
Y7402	90042-0591		1	PILOT VALVE, 04938-333-08	
Y7415	90042-0538		1	PILOT VALVE L=500MM	
Y7425	90042-0585		1	PILOT VALVE L=5M	
Common Parts					
010	2570821-0000		1	SHEET	
310	312115-0376		8	SCREW ISO4762 M6X35 A4 80	
350	90166-0068	MM	100	TUBE 12 MM PA BLUE	
360	90166-0068	MM	30	TUBE 12 MM PA BLUE	
365	90166-0068	MM	120	TUBE 12 MM PA BLUE	
375	90166-0068	MM	50	TUBE 12 MM PA BLUE	
400	90166-0117	MM	200	HOSE 4/6 PVC BLUE	
410	90166-0117	MM	220	HOSE 4/6 PVC BLUE	

Machine Type | Group Description | Used-In | Group Number | Page No

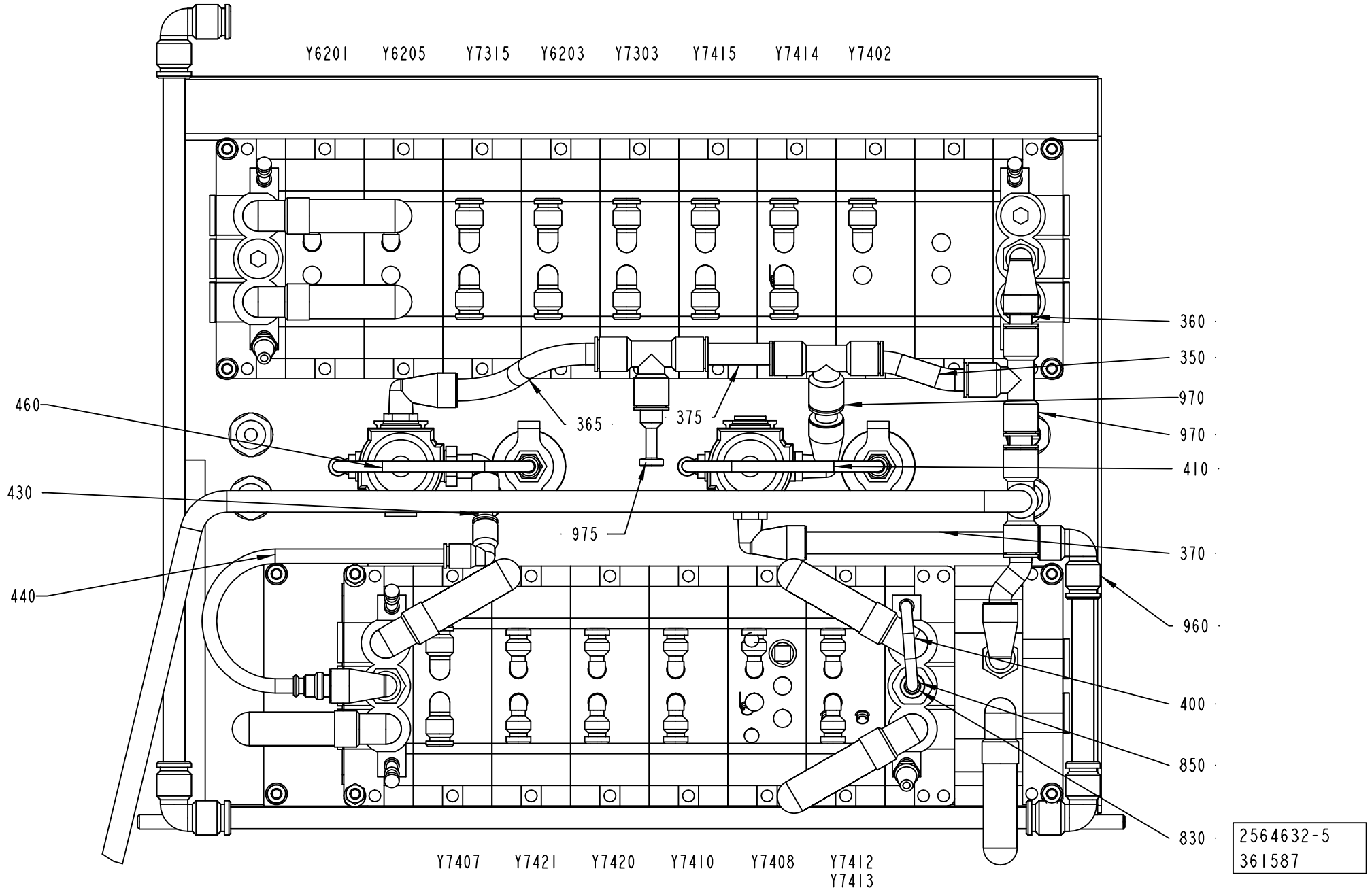
Y6201
Y6205
Y7315
Y6203
Y7303
Y7415
Y7414
Y7402
360
350
970
970
410
370
960
400
850
830
460
430
440
365
375
975
Y7407
Y7421
Y7420
Y7410
Y7408
Y7412
Y7413
2564632-5
361587

ECM: 361827 - 20081001
Group number: 2564632-0100
Assembly Drawing: 2564632-5_2_AD

This list covers pages from 8-236 to 8-239

Pos	Part No	UN	Qty	Description	Page No
Common Parts (Cont'd)					
430	90166-0194	MM	30	TUBE 8 MM PUR BLUE	
440	90166-0194	MM	270	TUBE 8 MM PUR BLUE	
460	90166-0117	MM	220	HOSE 4/6 PVC BLUE	
530	90457-0078		2	PANEL NUT	
550	90458-0322		4	NUT, M16X1,5	
590	342713-0210		2	PLUG, EXT THREAD HEX SOCKET	
620	342770-0105		2	STRAIGHT COUPLING INT, D=6 MM - G1/8	
650	90042-0221		1	VALVE BODY 5/2 BISTABLE	
660	90042-0265		1	HIGH SPEED VENTING VALVE 583-590-000-1	
680	90042-0522		4	PORTED END PIECE ISO SIZE 1	
700	90042-0532		14	BASE PLATE ISO SIZE 1	
740	90328-0017		2	SILENCER, D=6 MM	
770	90328-0024		7	SILENCER G3/8"	
780	90328-0038		1	SILENCER, D=8 MM	
800	90042-0545		1	SUB-BASE SOFT START ISO 1 AND VDMA 01	
830	342716-0203		1	REDUCER 6-8	
840	90140-0020		7	ELBOW, 90, INT/EXT. THREAD, NO. 2020-3/8	
850	342722-0206		1	STRAIGHT COUPLING D=8-G3/8"	
880	90458-2956		2	ELBOW PIPE JOINT, EXT.THREAD, D=6MM-G1/8	
950	342735-0103		1	ELBOW PIPE JOINT	
960	342735-0109		4	ELBOW PIPE JOINT	
980	90166-0068	MM	200	TUBE 12 MM PA BLUE	
995	90166-0068	MM	2000	TUBE 12 MM PA BLUE	
X7049	90042-0535		1	TERMINAL BOARD 19 CORDS	
X7050	90042-0535		1	TERMINAL BOARD 19 CORDS	
Y6203	90042-0539		1	PILOT VALVE L=350MM	
Y6205	90042-0591		1	PILOT VALVE, 04938-333-08	
Y7303	90042-0539		1	PILOT VALVE L=350MM	
Y7315	90042-0591		1	PILOT VALVE, 04938-333-08	
Y7407	90042-0591		1	PILOT VALVE, 04938-333-08	
Y7408	90042-0538		1	PILOT VALVE L=500MM	
Y7410	90042-0539		1	PILOT VALVE L=350MM	
Y7412	90042-0538		1	PILOT VALVE L=500MM	
Y7413	90042-0538		1	PILOT VALVE L=500MM	
Y7414	90042-0538		1	PILOT VALVE L=500MM	
Y7420	90042-0591		1	PILOT VALVE, 04938-333-08	
Y7421	90042-0591		1	PILOT VALVE, 04938-333-08	

Pos	Part No	UN	Qty	Description	Page No

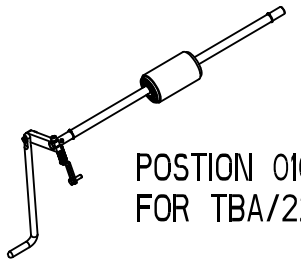

POSTION 010
FOR TBA/22

RIGHT SIDE

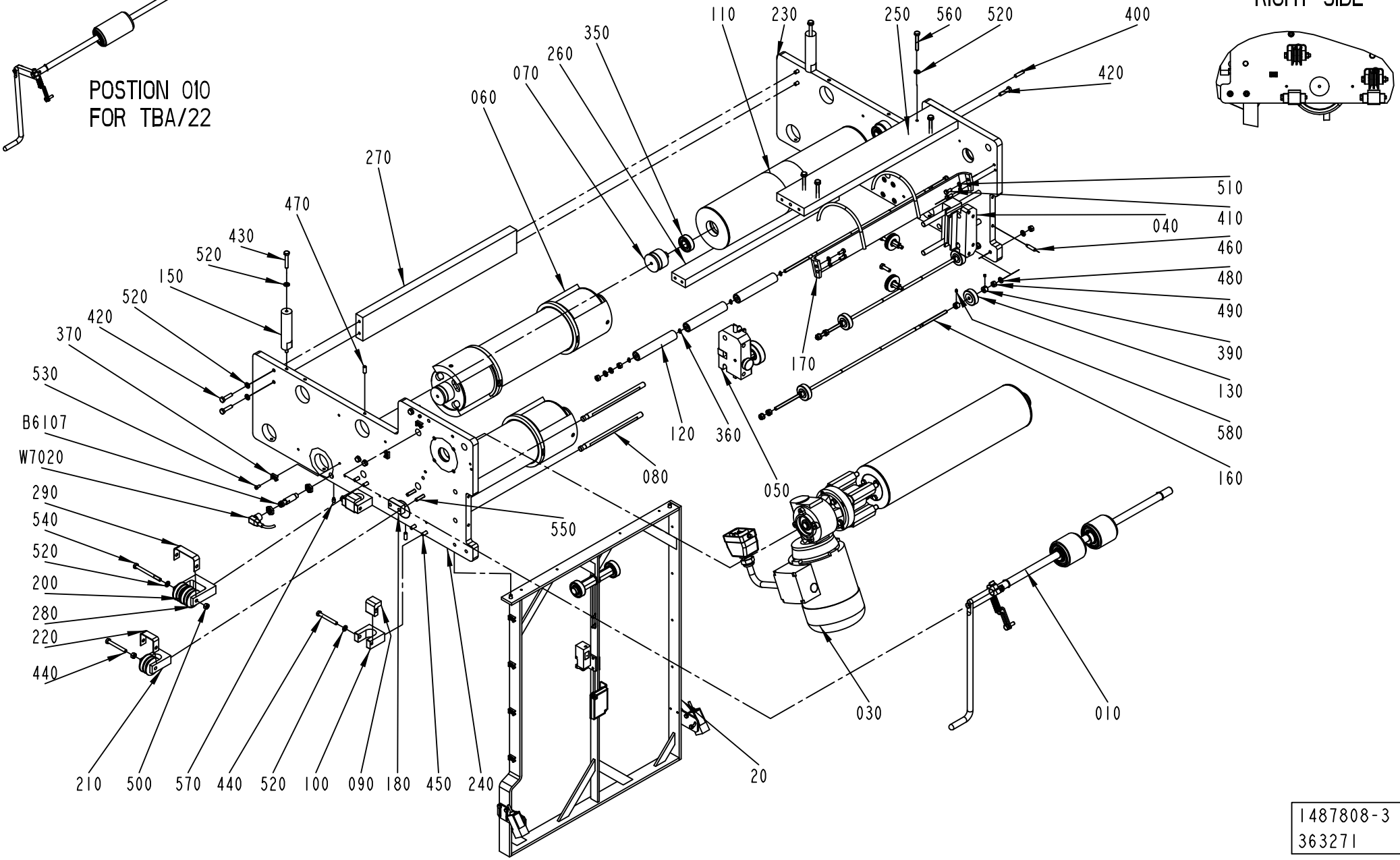

1487808-3
363271

ECM: 383477 - 20090402
Group number: 1487808-0200
Assembly Drawing: 1487808-3_1_AG

Pos	Part No	UN	Qty	Description	Page No
A3/FLEX					
010	1512429-0200		1	PRESSURE ROLLER	**8-243**
040	2529547-0100		1	PAPER GUIDE	**8-175**
050	1484745-0100		1	WEB GUIDE	**8-155**
070	1499584-0000		2	AXLE PIN	
080	1484704-0000		4	SHAFT	
350	321313-0102		2	BALL BEARING, 15X35X11 MM	
Common Parts					
020	1524731-0300		1	BRACKET	**8-245**
030	1524732-0200		1	DRIVE UNIT	**8-247**
060	2605228-0100		2	BENDING ROLLER	**8-249**
090	1484728-0000		4	BRACKET	
100	1484738-0000		4	BRACKET	
110	1484766-0000		1	DANCE ROLLER	
120	2831688-0000		3	ROLLER	
130	1558911-0000		4	PRESSURE ROLLER	
150	1487802-0000		2	SPACER	
160	2701319-0000		3	GUIDE PIN	
170	2550896-0000		1	RAIL	
180	1519960-0000		1	SPACER	
200	1519581-0000		5	ROLLER BAR	
210	1519586-0000		3	BRACKET	
220	1519592-0000		4	BOW	
230	1490814-0000		1	PLATE	
240	1490815-0000		1	PLATE	
250	1487795-0000		1	PLATE	
260	1487796-0000		1	PLATE	
270	1487800-0000		1	PLATE	
280	1538192-0000		1	BRACKET	
290	1539396-0000		1	BOW CLAMP	
360	315751-0103		4	RETAINING RING FOR SHAFT DIN 471 6 SS	
370	352113-0205		6	ANCHOR PLATES FOR STRIPS, TYPE TM2S8-C10	
390	315741-0102		8	RETAINING RING DIN 705 A2 6	
400	311103-1355		2	PARALLEL PIN ISO 2338 6M6X24 A1	
410	312105-0327		4	SCREW M6S ISO 4017 M5X12 A480	
420	312105-0372		11	SCREW M6S ISO 4017 M6X25 A480	
430	312105-0376		2	SCREW M6S ISO 4014 M6X35 A480	
440	312105-0380		8	SCREW M6S ISO 4014 M6X50 A480	
450	312115-0370		14	SCREW ISO4762 M6X20 A4 80	
460	312311-0372		4	SCREW ISO4028 M6X25 FZB	
470	312318-0368		5	SCREW ISO4029 M6X16 A4	
480	315103-0153		12	WASHER, BRB, 6,4/12,H=1,5 NIPL BR	
490	312607-0316		12	HEXAGON NUT, EN 24032 M6M M6 A480	
500	312605-0316		5	HEXAGON NUT, M6M M6 A280	
510	315105-0146		4	WASHER BRB 5,3X10 RFR	
520	315105-0153		25	WASHER BRB 6,4X12 RFR	
530	312125-0287		6	SCREW ISO 1207 M4X8 A4	
540	312105-0384		1	SCREW M6S ISO 4014 M6X70 A480	
550	312115-0374		2	SCREW ISO4762 M6X30 A4 80	
560	312109-0378		4	SCREW M6S ISO 4017 M6X40 A480	
570	90287-0154		1	SCREW, SOCK.SET DOGPOINT M6X10	
580	312318-0283		8	SCREW ISO4029 M4X4 A4	
B6107	90600-0460		1	INDUCTIVE SWITCH, E2A-M12KN05-M1-B1-TP	
W7020	90458-1076		1	L-SHAPED CONNECTOR CABLE 933 235-042	

Machine Type	Group Description	Used-In	Group Number	Page No

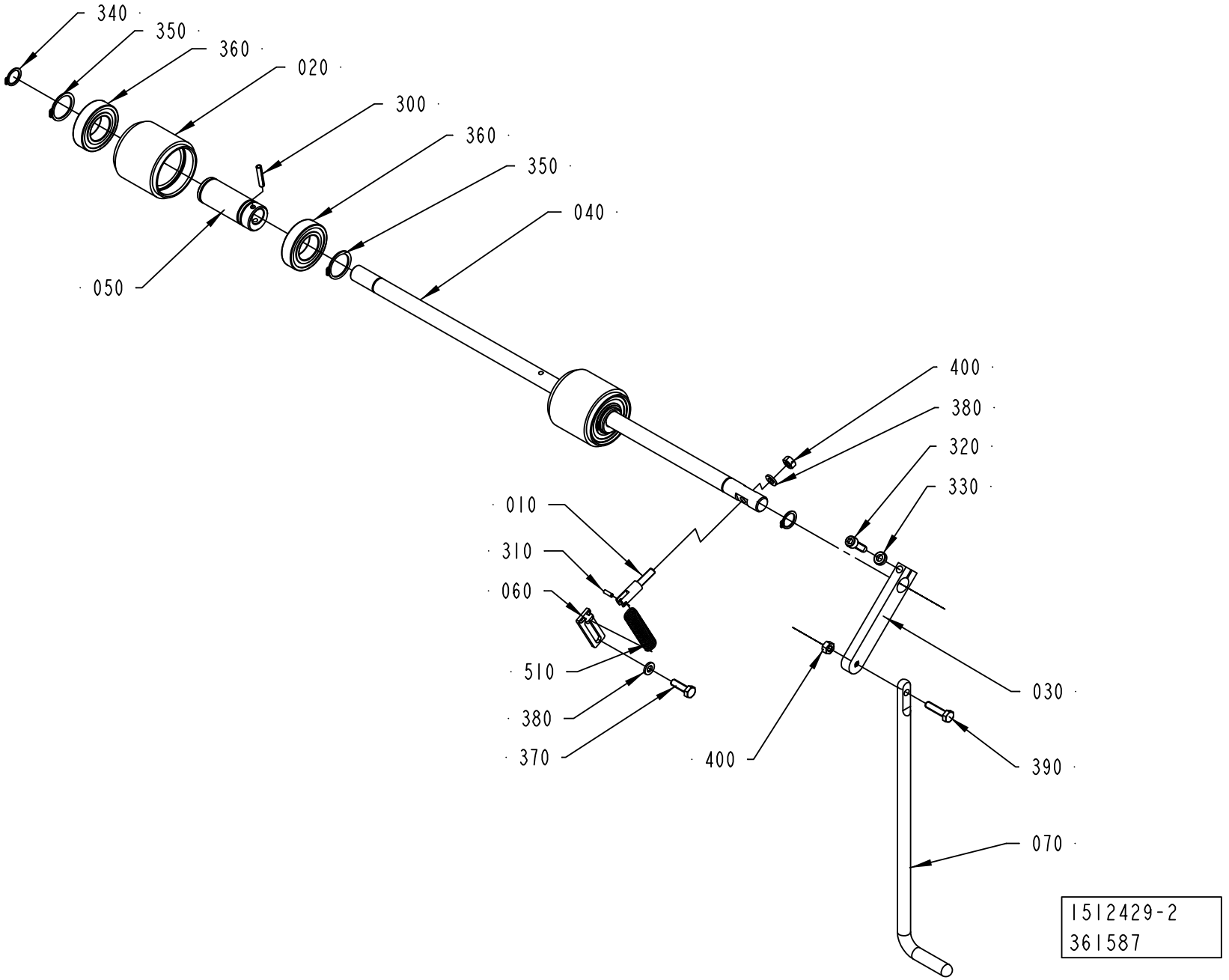
340
350
360
020
300
360
350
040
050
400
380
320
330
010
310
060
510
380
370
400
030
390
070
1512429-2
361587

ECM: 383473 - 20090402
Group number: 1512429-0200
Assembly Drawing: 1512429-2_1_AA

Pos	Part No	UN	Qty	Description	Page No
-					
010	2919169-0000		1	PIN	
020	2916653-0000		2	ROLLER	
030	2576379-0000		1	ROCKER ARM	
040	2914242-0000		1	SHAFT	
050	2916859-0000		2	ECCENTRIC BUSHING	
060	2970916-0000		1	PLATE	
070	2578455-0000		1	LIFTING HANDLE	
300	311112-0258		2	SPRING PIN, ISO 8752 4X24-C	
310	311103-0233		1	PARALLEL PIN ISO 2338 3M6X10 A1	
320	312115-0370		1	SCREW ISO4762 M6X20 A4 80	
330	315115-0153		1	WASHER PLAIN, TBRB 6,4/12 H=3	
340	315751-0112		2	RETAINING RING FOR SHAFT DIN 471 15 SS	
350	315751-0119		4	RETAINING RING FOR SHAFT DIN 471 25 SS	
360	321308-0205		4	BALL BEARING, 25X47X12MM	
370	312105-0370		1	SCREW M6S ISO 4017 M6X20 A480	
380	315106-0153		2	WASHER ISO 7089-6-200 HV A4	
390	312105-0372		1	SCREW M6S ISO 4017 M6X25 A480	
400	312605-0316		2	HEXAGON NUT, M6M M6 A280	
510	90335-0091		1	TENSION SPRING 41890, 1,2X13X48,2	

Pos	Part No	UN	Qty	Description	Page No

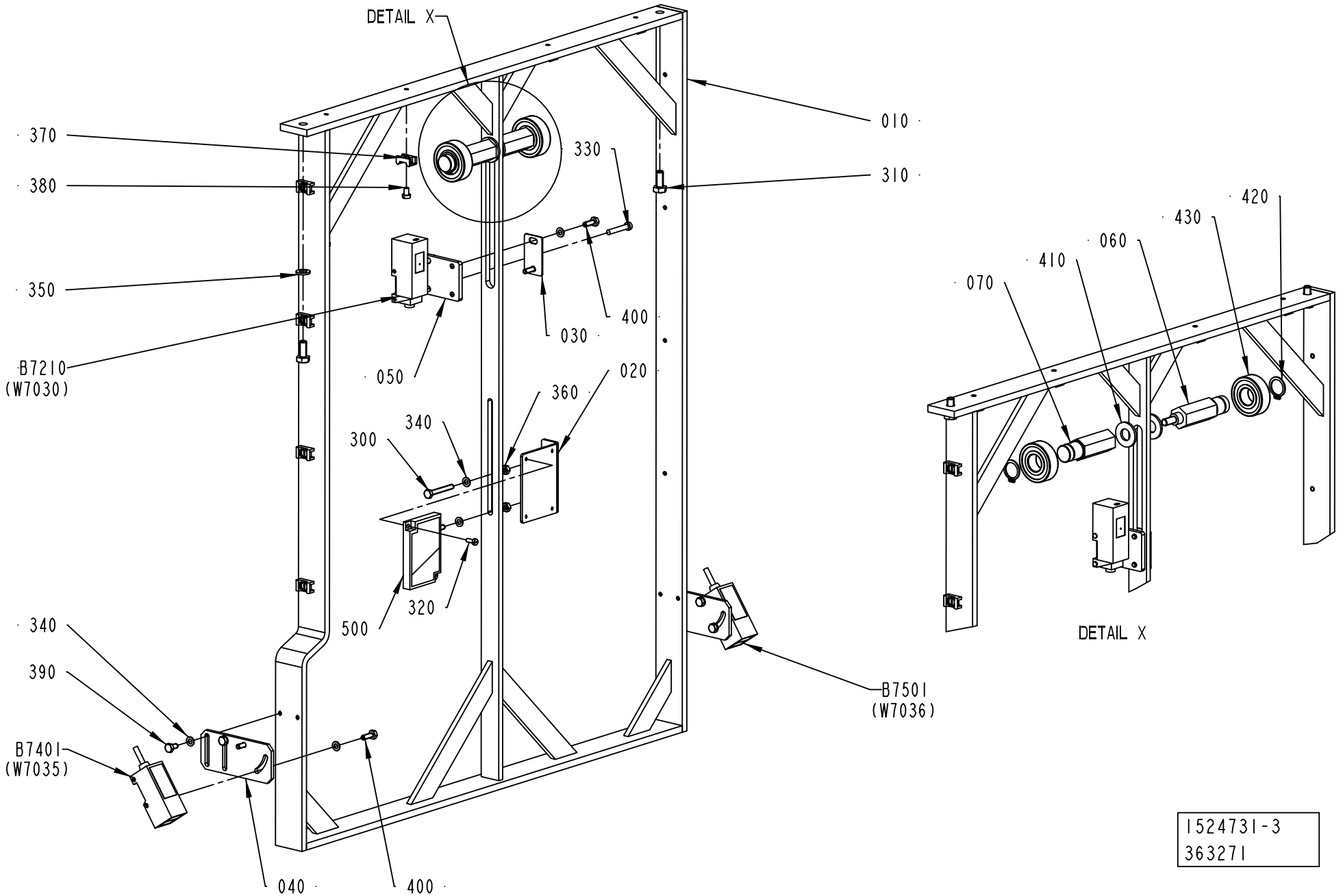

1524731-3
363271

ECM: 383472 - 20090402
Group number: 1524731-0300
Assembly Drawing: 1524731-3_1_AB

Pos	Part No	UN	Qty	Description	Page No
-					
010	2541942-0000		1	BRACKET	
020	1487784-0000		1	BRACKET	
030	1517105-0000		1	PLATE	
040	2542496-0000		2	BRACKET	
050	2651925-0000		1	PLATE	
060	2737841-0000		1	BRACKET	
070	2737842-0000		1	BRACKET	
300	312105-0299		2	SCREW M6S ISO 4017 M4X30 A470	
310	312105-0367		2	SCREW M6S ISO 4017 M6X14 A480	
320	312125-0222		2	SCREW ISO 1207 M3X8 A4	
330	312125-0297		2	SCREW ISO 1207 M4X25 A4	
340	315105-0136		14	WASHER BRB 4,3X8 RFR	
350	315105-0153		2	WASHER BRB 6,4X12 RFR	
360	312605-0312		4	HEXAGON NUT, M6M M4 A280	
370	352113-0205		12	ANCHOR PLATES FOR STRIPS, TYPE TM2S8-C10	
380	312125-0285		12	SCREW ISO 1207 M4X6 A4	
390	312105-0287		4	SCREW M6S ISO 4017 M4X8 A470	
400	312105-0291		6	SCREW M6S ISO 4017 M4X12 A470	
410	315105-0173		2	WASHER BRB 10,5X22 RFR	
420	315750-0112		2	RETAINING RING SHAFT DIN 471 ST 15	
430	321313-0102		2	BALL BEARING, 15X35X11 MM	
500	90232-0333		1	REFLECTOR E39-R1	
B7210	90232-0129		1	PH.CELL E3S-CR61-5M	
B7401	90232-0106		1	PH.CELL E3S-CR11-5M	
B7501	90232-0106		1	PH.CELL E3S-CR11-5M	

Pos	Part No	UN	Qty	Description	Page No

Machine Type | Group Description | Used-In | Group Number | Page No

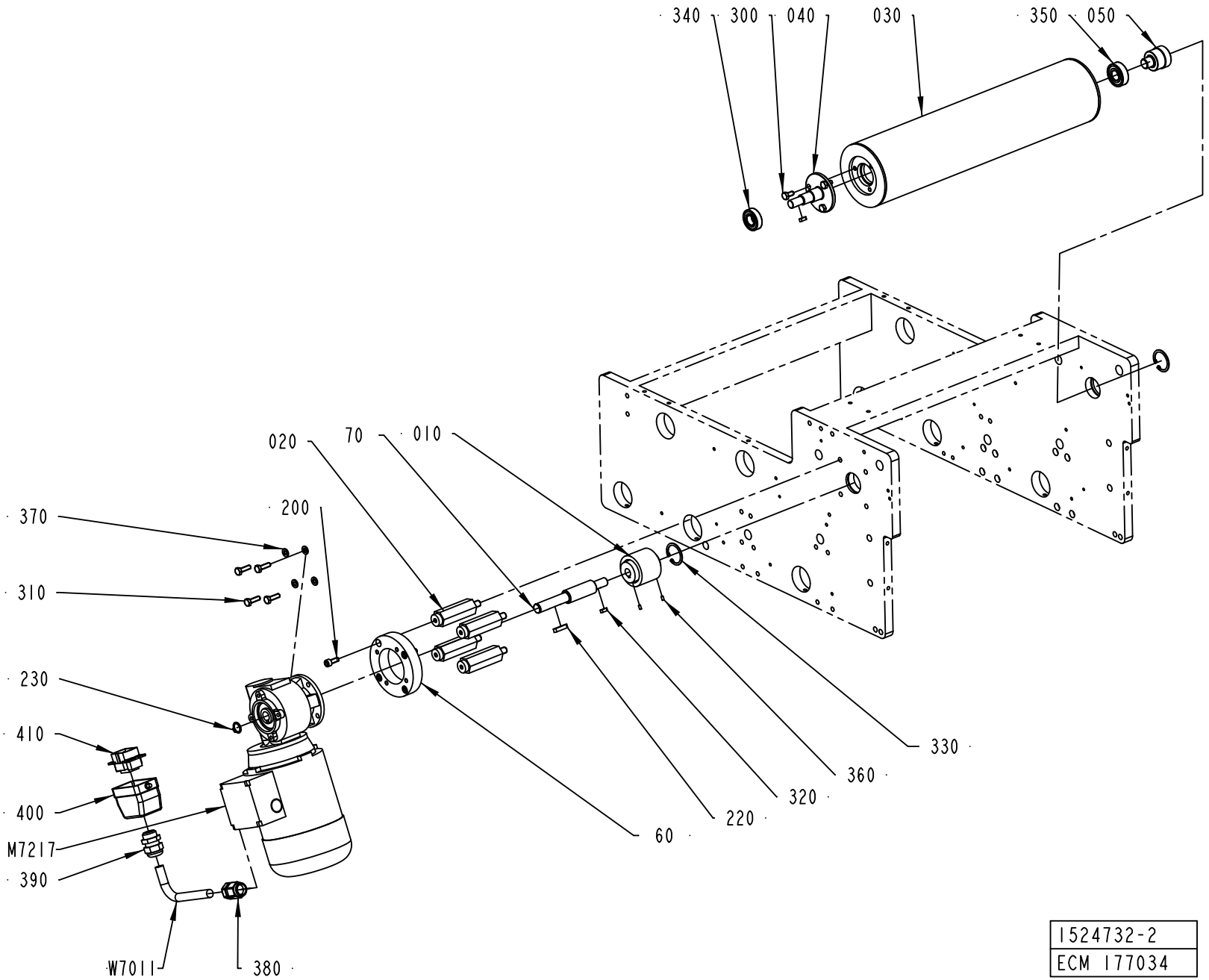
340
300
040
030
350
050
020
70
010
200
370
310
230
410
400
M7217
390
W7011
380
60
220
320
360
330
1524732-2
ECM 177034

ECM: 383471 - 20090402
Group number: 1524732-0200
Assembly Drawing: 1524732-2_1_AD

Pos	Part No	UN	Qty	Description	Page No
A3/FLEX					
030	2523497-0000		1	BENDING ROLLER	
W7011	90220-0104	M	9	SCR. CABLE 4X1,5MM2	
Common Parts					
010	979847-0000		1	SHAFT COUPLING	
020	1487788-0000		4	SPACER	
040	2523499-0000		1	SHAFT	
050	2523500-0000		1	AXLE PIN	
060	2532561-0000		1	SPACER	
070	2588067-0000		1	SHAFT	
200	312115-0368		4	SCREW ISO4762 M6X16 A4 80	
220	315705-0202		1	PARALLEL KEY W ROUND ENDS 5X5X25MM	
230	315751-0111		1	RETAINING RING FOR SHAFT DIN 471 14 SS	
300	312105-0366		3	SCREW M6S ISO 4017 M6X12 A480	
310	312105-0370		4	SCREW M6S ISO 4017 M6X20 A480	
320	315701-0166		2	PARALLEL KEY W. ROUND ENDS 4X4X12 MM	
330	315753-0123		2	RETAINING RING FOR BORE DIN 472 32 A2	
340	321308-0202		1	BALL BEARING, 15X32X9 MM	
350	321313-0102		1	BALL BEARING, 15X35X11 MM	
360	312318-0220		2	SCREW ISO4029 M3X6 A4	
370	315105-0153		4	WASHER BRB 6,4X12 RFR	
380	90458-0438		1	GLAND, EXTENDED WITH INSERT, M20X1,5	
390	352103-0108		1	CABLE GLAND, ST 13,5 , PR20,4/PG13,5	
400	90110-0157		1	CABLE HOOD 6-POL 70.352.0628.1	
410	90110-0159		1	MALE INSERT 70.310.0640.0	
M7217	90459-2096		1	GEARS, WORM MOTOR F2 15 P63 B14 B8 PV 75	
W7011	90220-0104	M	10.7	SCR. CABLE 4X1,5MM2	

Pos	Part No	UN	Qty	Description	Page No

Machine Type | Group Description | Used-In | Group Number | Page No

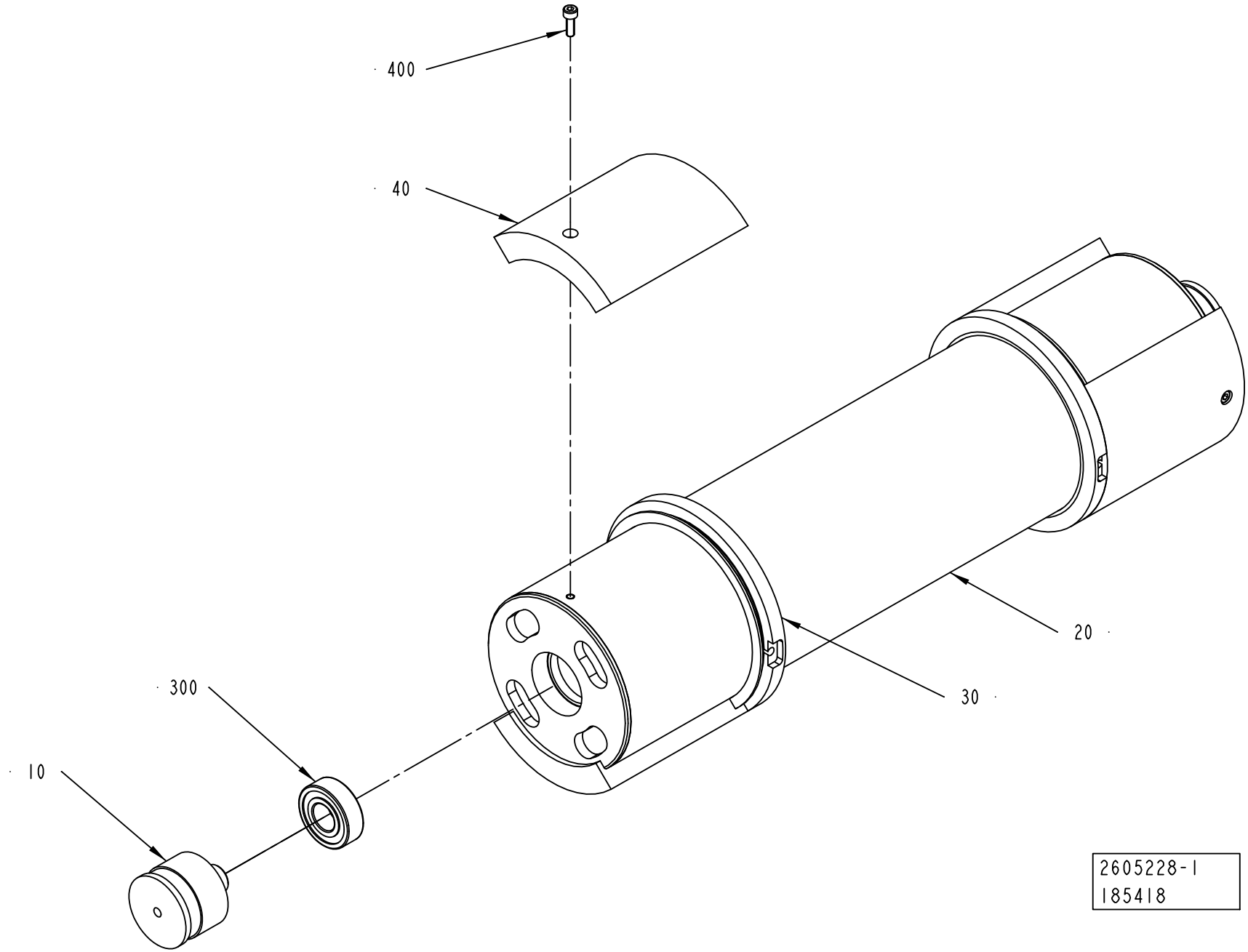
400
40
20
30
300
10
2605228-1
185418

ECM: 383461 - 20090402
Group number: 2605228-0100
Assembly Drawing: 2605228-1_1_AB

Pos	Part No	UN	Qty	Description	Page No
TGA 1000SQ, TGA 0750SQ, TGA 0500SQ (See drawing on page: 8-248)					
040	2508205-0019		4	BRACKET	
TPA 0330SQ (See drawing on page: 8-248)					
040	2508205-0008		4	BRACKET	
TPA 1000SQ, TPA 0750SQ (See drawing on page: 8-248)					
040	2508205-0012		4	BRACKET	
TBA 0200S, TPA 0250SQ, TPA 0200SQ (See drawing on page: 8-248)					
040	2508205-0010		4	BRACKET	
TBA 0200B, TBA 0200SQ, TBA 0250B, TBA 0330S, TBA 0250SQ (See drawing on page: 8-248)					
040	2508205-0007		4	BRACKET	
TBA 0200M, TBA 0250S (See drawing on page: 8-248)					
040	2508205-0009		4	BRACKET	
TBA 0500S (See drawing on page: 8-248)					
040	2508205-0005		4	BRACKET	
TPA 0500SQ (See drawing on page: 8-248)					
040	2508205-0006		4	BRACKET	
TBA 0500SQ, TBA 1000SQ (See drawing on page: 8-248)					
040	2508205-0003		4	BRACKET	
TBA 1000B, TBA 1500S (See drawing on page: 8-248)					
040	2508205-0001		4	BRACKET	
TBA 1000S (See drawing on page: 8-248)					
040	2508205-0002		4	BRACKET	
TBA 1890S, TBA 2000S, TBA 1400B (See drawing on page: 8-248)					
040	2701847-0000		4	BRACKET	
Common Parts					
010	1499584-0000		2	AXLE PIN	
020	2508206-0000		1	BENDING ROLLER	
030	2701846-0000		2	FLANGE	
300	321313-0102		2	BALL BEARING, 15X35X11 MM	
400	312115-0291		4	SCREW ISO4762 M4X12 A4 80	

Pos	Part No	UN	Qty	Description	Page No

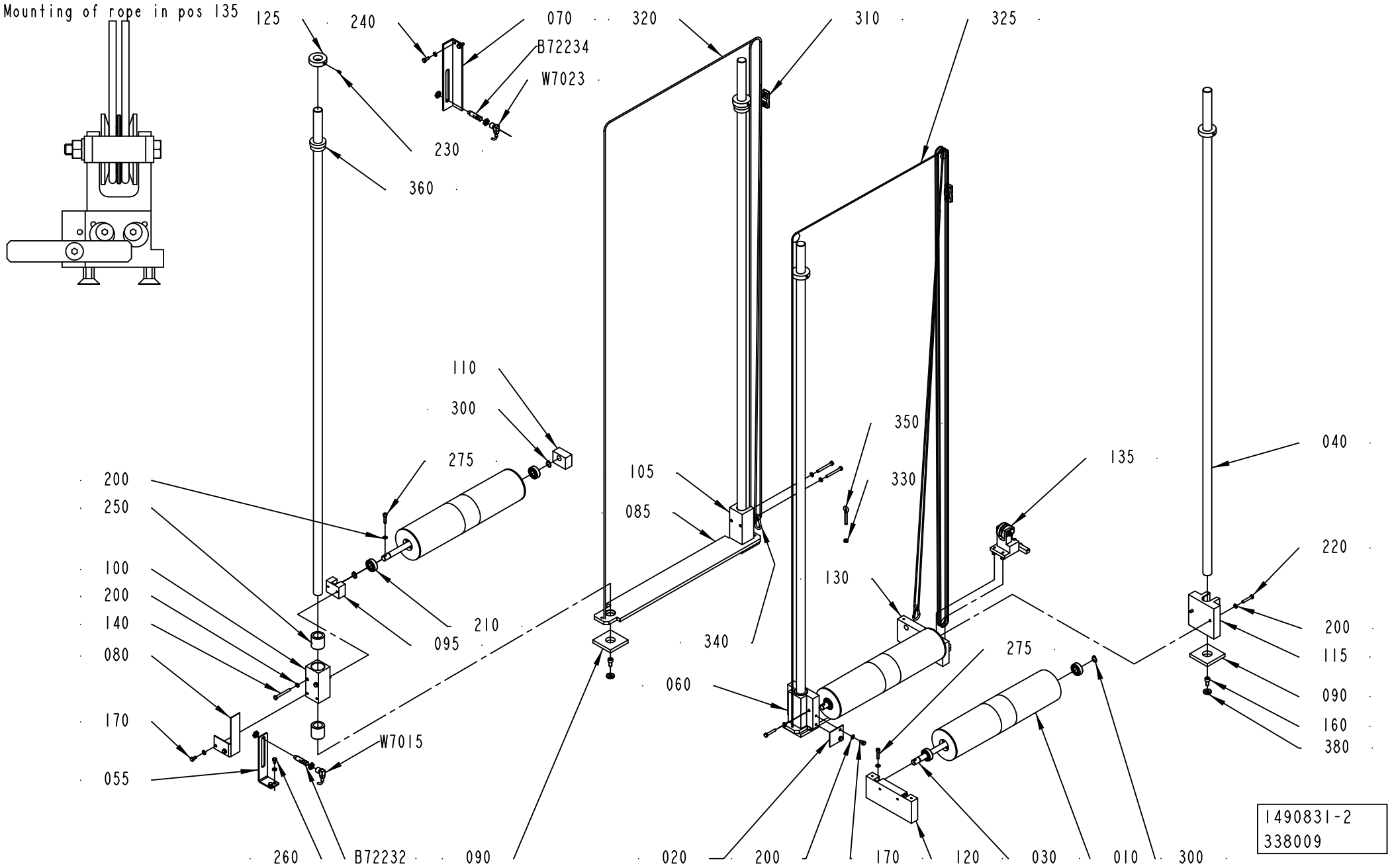
Mounting of rope in pos 135
125
240
070
B72234
W7023
320
310
325
230
360
110
300
275
200
250
100
200
140
080
170
055
095
210
W7015
105
085
350
330
130
340
060
135
040
220
200
115
090
160
380
275
260
B72232
090
020
200
170
120
030
010
300
1490831-2
338009

ECM: 383476 - 20090402
Group number: 1490831-0200
Assembly Drawing: 1490831-2_1_AE

This list covers pages from 8-250 to 8-253

Pos	Part No	UN	Qty	Description	Page No
TPA 1000SQ, TBA 1890S, TBA 2000S, TBA 1400B, TPA 0750SQ (See drawing on pages: 8-250, 8-252)					
150	2609303-0000		2	WEIGHT	
290	90287-0261		4	SCREW MC6S M5X55 A270	
Common Parts					
010	1484766-0000		3	DANCE ROLLER	
020	1484778-0000		1	PLATE	
030	1487519-0000		3	SHAFT	
040	1487530-0001		4	GUIDE ROD	
055	1484761-0000		1	ANGLE BRACKET	
060	1487536-0000		1	GUIDE BRACKET	
070	1487550-0000		1	ANGLE BRACKET	
080	1487551-0000		1	PLATE	
085	1519942-0000		2	PLATE	
090	1487765-0000		4	SPACER	
095	1511579-0000		1	BRACKET	
100	1484752-0000		1	SLIDER	
105	1484760-0000		1	SLIDER	
110	1490183-0000		1	BRACKET	
115	1511564-0000		1	BRACKET	
120	1487537-0000		1	BRACKET	
125	1487769-0000		4	SPACER	
130	1487538-0000		1	BRACKET	
135	1548210-0100		1	LOCKING DEVICE	**8-255**
140	312105-0381		4	SCREW M6S ISO 4014 M6X55 A480	
160	312115-0489		4	SCREW ISO4762 M10X16 A4 80	
170	312105-0366		4	SCREW M6S ISO 4017 M6X12 A480	
200	315105-0153		19	WASHER BRB 6,4X12 RFR	
210	321313-0102		6	BALL BEARING, 15X35X11 MM	
220	312105-0376		4	SCREW M6S ISO 4014 M6X35 A480	
230	90287-0154		4	SCREW, SOCK.SET DOGPOINT M6X10	
240	312105-0368		2	SCREW M6S ISO 4017 M6X16 A480	
250	90189-0025		4	BALL BUSHING, 25X37X37 MM	
260	312105-0364		2	SCREW M6S ISO 4017 M6X10 A480	
275	312115-0372		3	SCREW ISO4762 M6X25 A4 80	
300	315751-0112		6	RETAINING RING FOR SHAFT DIN 471 15 SS	
310	90211-0002		2	WIRE LOCK, 5 MM	
320	90319-0013	M	12	POLYESTER-SILKROPE 4MM 3900N, 102079	
325	90319-0013	M	8	POLYESTER-SILKROPE 4MM 3900N, 102079	
330	312605-0316		1	HEXAGON NUT, M6M M6 A280	
340	90459-2704		2	SNAP HOOK STAINLESS 50X5MM	
350	90459-2705		1	LIFTING EYE BOLT, M6X40MM	
360	353249-0054		2	INSERT, SINGLE HOLE, EK 156/25	
380	315115-0173		4	WASHER PLAIN, TBRB 10,5/22 H=4	
B72232	90458-0677		1	PROX.SWITCH E2EG-X5MB1-M1	
B72234	90458-0677		1	PROX.SWITCH E2EG-X5MB1-M1	
W7015	90458-1076		1	L-SHAPED CONNECTOR CABLE 933 235-042	
W7023	90458-1076		1	L-SHAPED CONNECTOR CABLE 933 235-042	

Machine Type	Group Description	Used-In	Group Number	Page No

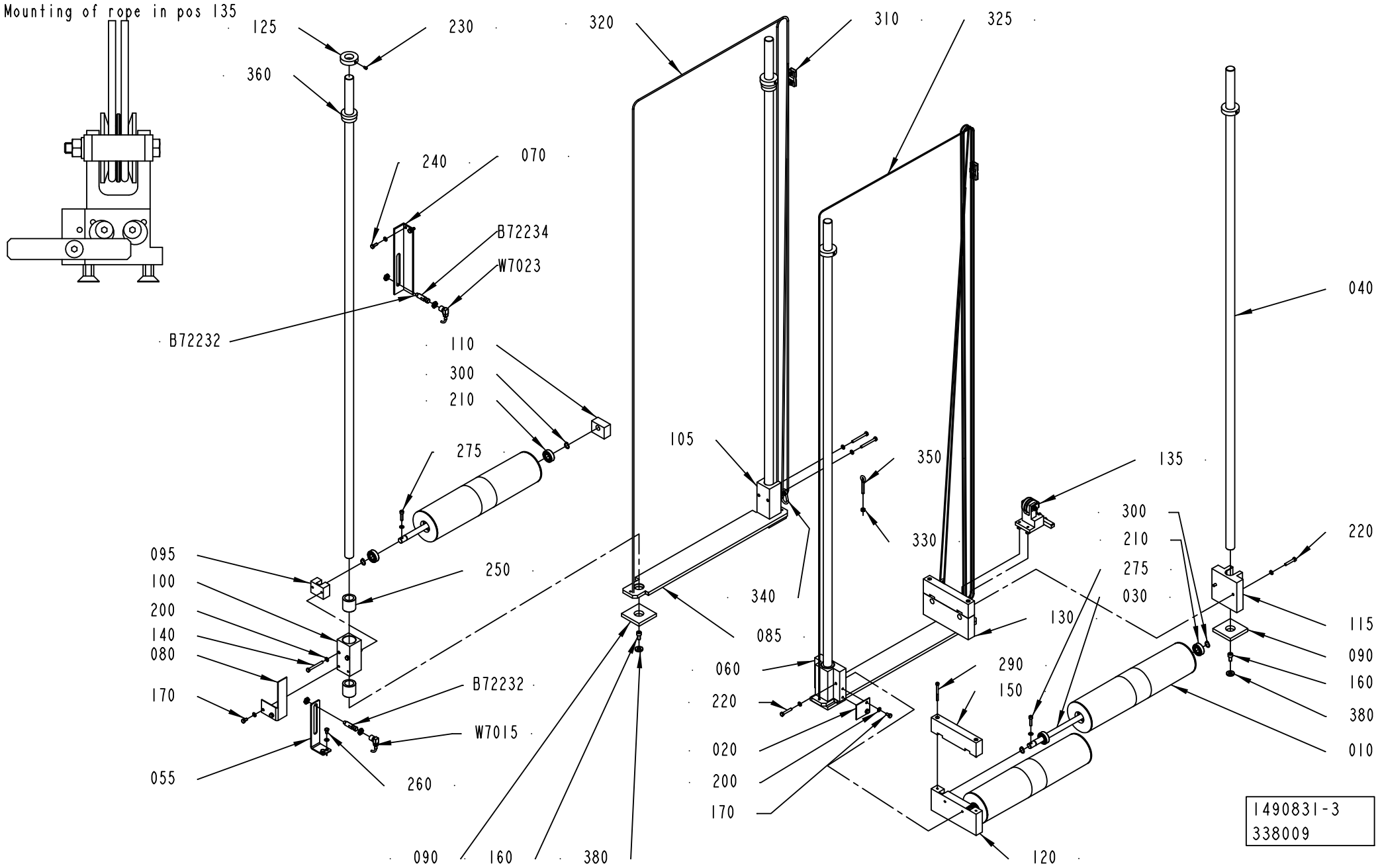
Mounting of rope in pos 135
125
230
320
310
325
360
240
070
B72234
W7023
B72232
110
300
210
275
105
350
135
040
095
100
200
140
080
170
055
250
B72232
W7015
260
340
085
060
220
020
200
170
330
300
210
275
030
130
290
150
220
115
090
160
380
010
120
090
160
380
1490831-3
338009

ECM: 383476 - 20090402
Group number: 1490831-0200
Assembly Drawing: 1490831-3_1_AB

This list covers pages from 8-250 to 8-253

Pos	Part No	UN	Qty	Description	Page No
TPA 1000SQ, TBA 1890S, TBA 2000S, TBA 1400B, TPA 0750SQ (See drawing on pages: 8-250, 8-252)					
150	2609303-0000		2	WEIGHT	
290	90287-0261		4	SCREW MC6S M5X55 A270	
Common Parts					
010	1484766-0000		3	DANCE ROLLER	
020	1484778-0000		1	PLATE	
030	1487519-0000		3	SHAFT	
040	1487530-0001		4	GUIDE ROD	
055	1484761-0000		1	ANGLE BRACKET	
060	1487536-0000		1	GUIDE BRACKET	
070	1487550-0000		1	ANGLE BRACKET	
080	1487551-0000		1	PLATE	
085	1519942-0000		2	PLATE	
090	1487765-0000		4	SPACER	
095	1511579-0000		1	BRACKET	
100	1484752-0000		1	SLIDER	
105	1484760-0000		1	SLIDER	
110	1490183-0000		1	BRACKET	
115	1511564-0000		1	BRACKET	
120	1487537-0000		1	BRACKET	
125	1487769-0000		4	SPACER	
130	1487538-0000		1	BRACKET	
135	1548210-0100		1	LOCKING DEVICE	**8-255**
140	312105-0381		4	SCREW M6S ISO 4014 M6X55 A480	
160	312115-0489		4	SCREW ISO4762 M10X16 A4 80	
170	312105-0366		4	SCREW M6S ISO 4017 M6X12 A480	
200	315105-0153		19	WASHER BRB 6,4X12 RFR	
210	321313-0102		6	BALL BEARING, 15X35X11 MM	
220	312105-0376		4	SCREW M6S ISO 4014 M6X35 A480	
230	90287-0154		4	SCREW, SOCK.SET DOGPOINT M6X10	
240	312105-0368		2	SCREW M6S ISO 4017 M6X16 A480	
250	90189-0025		4	BALL BUSHING, 25X37X37 MM	
260	312105-0364		2	SCREW M6S ISO 4017 M6X10 A480	
275	312115-0372		3	SCREW ISO4762 M6X25 A4 80	
300	315751-0112		6	RETAINING RING FOR SHAFT DIN 471 15 SS	
310	90211-0002		2	WIRE LOCK, 5 MM	
320	90319-0013	M	12	POLYESTER-SILKROPE 4MM 3900N, 102079	
325	90319-0013	M	8	POLYESTER-SILKROPE 4MM 3900N, 102079	
330	312605-0316		1	HEXAGON NUT, M6M M6 A280	
340	90459-2704		2	SNAP HOOK STAINLESS 50X5MM	
350	90459-2705		1	LIFTING EYE BOLT, M6X40MM	
360	353249-0054		2	INSERT, SINGLE HOLE, EK 156/25	
380	315115-0173		4	WASHER PLAIN, TBRB 10,5/22 H=4	
B72232	90458-0677		1	PROX.SWITCH E2EG-X5MB1-M1	
B72234	90458-0677		1	PROX.SWITCH E2EG-X5MB1-M1	
W7015	90458-1076		1	L-SHAPED CONNECTOR CABLE 933 235-042	
W7023	90458-1076		1	L-SHAPED CONNECTOR CABLE 933 235-042	

Machine Type	Group Description	Used-In	Group Number	Page No

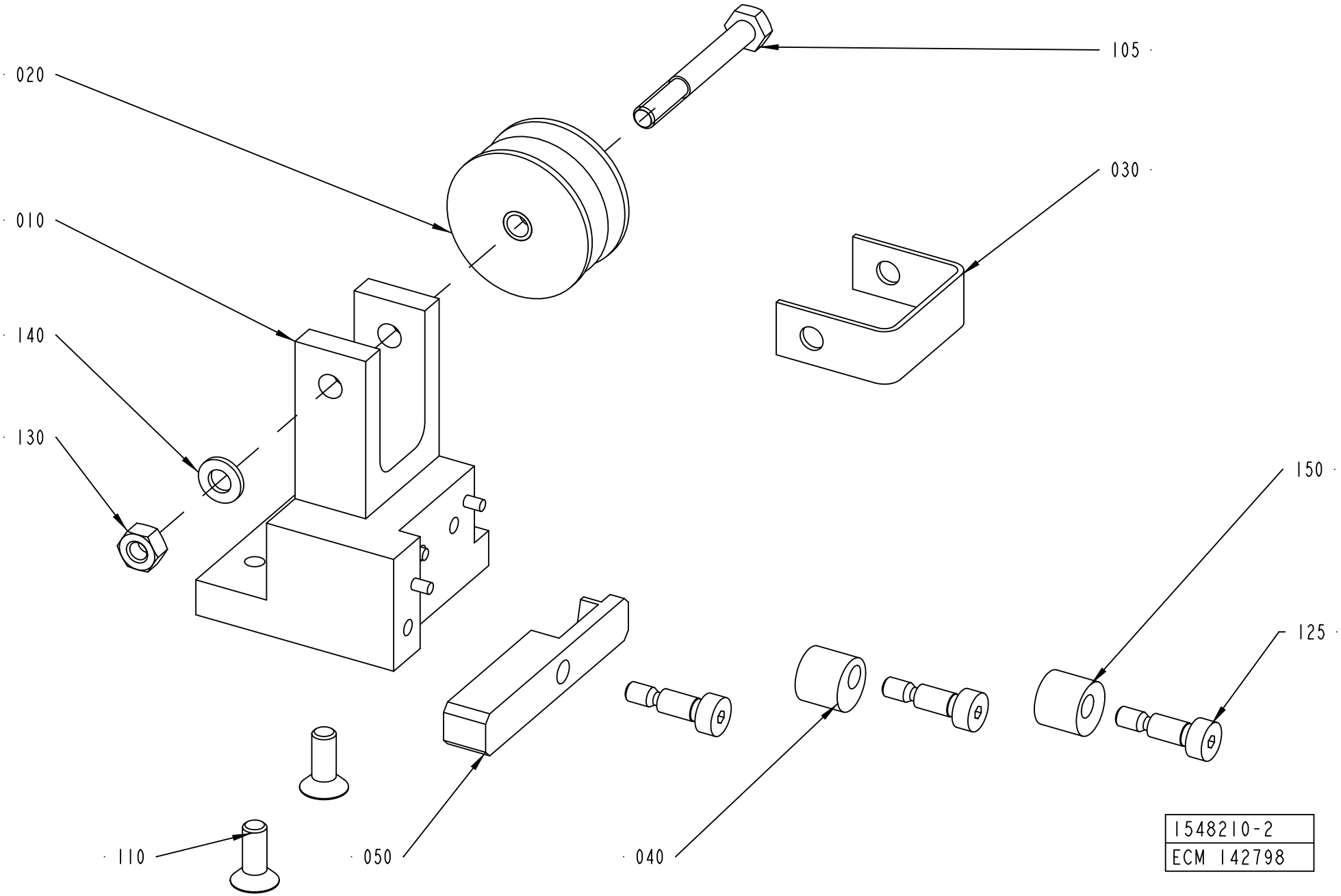
020
105
030
010
140
130
150
125
110
050
040
1548210-2
ECM 142798

ECM: 181010 - 20041005
Group number: 1548210-0100
Assembly Drawing: 1548210-2_1_AB

Pos	Part No	UN	Qty	Description	Page No
-					
010	2576244-0000		1	BRACKET	
020	1519581-0000		1	ROLLER BAR	
030	1519592-0000		1	BOW	
040	1539397-0000		1	ROLLER	
050	2576245-0000		1	ARM	
105	312105-0380		1	SCREW M6S ISO 4014 M6X50 A480	
110	312155-0368		2	SCREW DIN 7991 MF6S M6X16 A4 70	
125	312180-0366		3	SCREW ISO7379 H6X12	
130	312605-0316		1	HEXAGON NUT, M6M M6 A280	
140	315105-0153		1	WASHER BRB 6,4X12 RFR	
150	1549332-0000		1	ROLLER	

Pos	Part No	UN	Qty	Description	Page No

COVERING PANEL

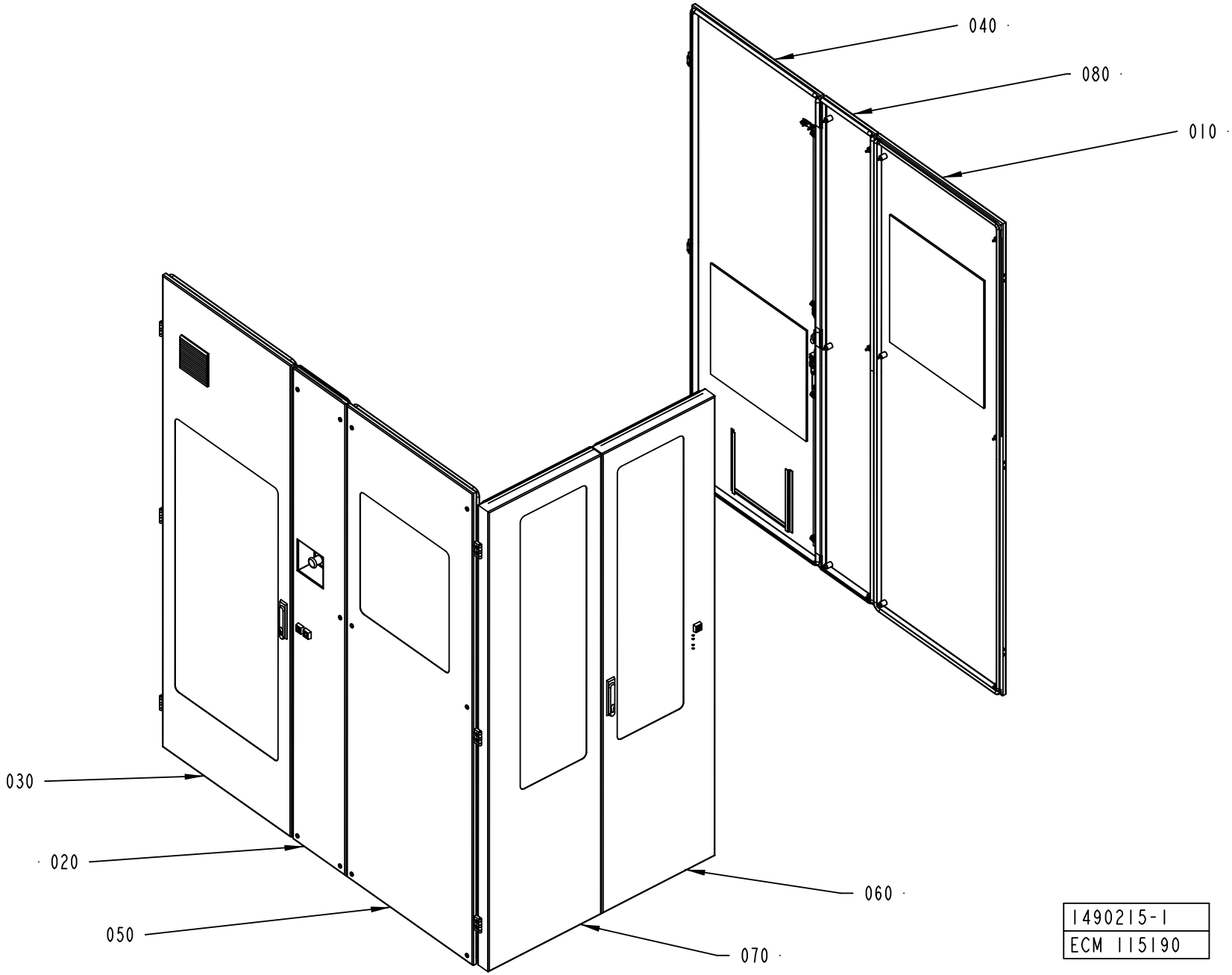

ECM: 273552 - 20061102
Group number: 1490215-0200
Assembly Drawing: 1490215-1_1_AC

This list covers pages from 8-256 to 8-263

Pos	Part No	UN	Qty	Description	Page No
A3/FLEX SEPROOM WITH ARL (See drawing on page: 8-262)					
085	2591680-0100		1	HOLDER	**8-265**
110	1524404-0100		2	COVER	**8-267**
120	1519599-0100		1	ROOF	**8-269**
130	2755891-0100		1	COVER	**8-273**
A3/FLEX ASU WITH ARL (See drawing on page: 8-260)					
085	2591680-0100		1	HOLDER	**8-265**
A3/FLEX SEPROOM WITHOUT ARL (See drawing on pages: 8-256, 8-258)					
110	1524404-0100		2	COVER	**8-267**
120	1519599-0100		1	ROOF	**8-269**
130	2755891-0100		1	COVER	**8-273**
Common Parts					
010	1499564-0100		1	COVER	**8-275, 8-277**
020	1490190-0200		1	HATCH	**8-281, 8-283**
030	1490191-0100		1	DOOR	**8-293**
040	1558988-0100		1	DOOR	**8-295**
050	1490193-0100		1	COVER	**8-297, 8-299**
060	1498453-0200		1	DOOR	**8-303**
070	1498454-0200		1	DOOR	**8-307**
080	1490188-0100		1	COVER	**8-309**

Pos	Part No	UN	Qty	Description	Page No

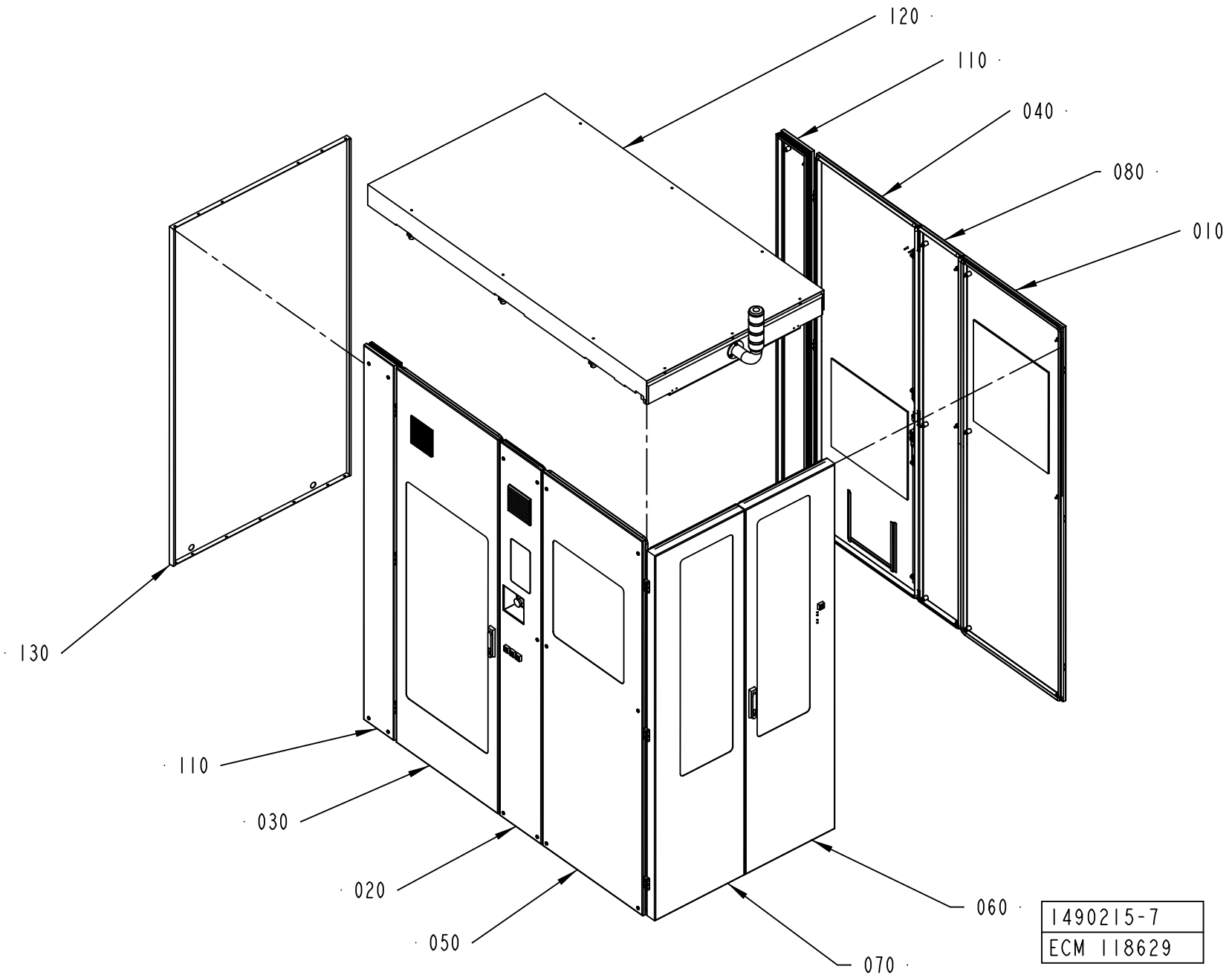
120
110
040
080
010
130
110
030
020
050
060
070
1490215-7
ECM 118629

ECM: 273552 - 20061102
Group number: 1490215-0200
Assembly Drawing: 1490215-7_1_AA

This list covers pages from 8-256 to 8-263

Pos	Part No	UN	Qty	Description	Page No
A3/FLEX SEPROOM WITH ARL (See drawing on page: 8-262)					
085	2591680-0100		1	HOLDER	**8-265**
110	1524404-0100		2	COVER	**8-267**
120	1519599-0100		1	ROOF	**8-269**
130	2755891-0100		1	COVER	**8-273**
A3/FLEX ASU WITH ARL (See drawing on page: 8-260)					
085	2591680-0100		1	HOLDER	**8-265**
A3/FLEX SEPROOM WITHOUT ARL (See drawing on pages: 8-256, 8-258)					
110	1524404-0100		2	COVER	**8-267**
120	1519599-0100		1	ROOF	**8-269**
130	2755891-0100		1	COVER	**8-273**
Common Parts					
010	1499564-0100		1	COVER	**8-275, 8-277**
020	1490190-0200		1	HATCH	**8-281, 8-283**
030	1490191-0100		1	DOOR	**8-293**
040	1558988-0100		1	DOOR	**8-295**
050	1490193-0100		1	COVER	**8-297, 8-299**
060	1498453-0200		1	DOOR	**8-303**
070	1498454-0200		1	DOOR	**8-307**
080	1490188-0100		1	COVER	**8-309**

Pos	Part No	UN	Qty	Description	Page No

COVERING PANEL

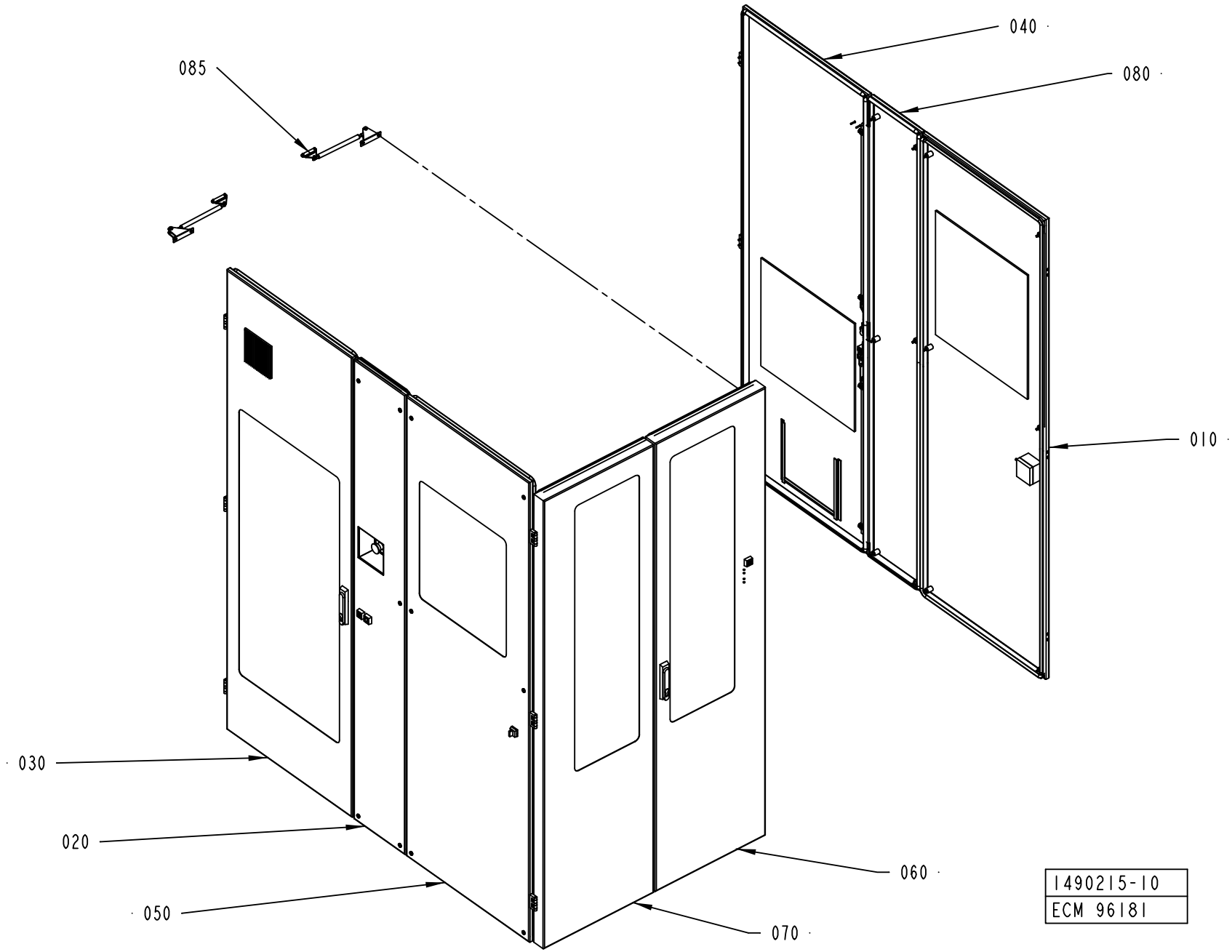

ECM: 273552 - 20061102
Group number: 1490215-0200
Assembly Drawing: 1490215-10_1_AA

This list covers pages from 8-256 to 8-263

Pos	Part No	UN	Qty	Description	Page No
A3/FLEX SEPROOM WITH ARL (See drawing on page: 8-262)					
085	2591680-0100		1	HOLDER	**8-265**
110	1524404-0100		2	COVER	**8-267**
120	1519599-0100		1	ROOF	**8-269**
130	2755891-0100		1	COVER	**8-273**
A3/FLEX ASU WITH ARL (See drawing on page: 8-260)					
085	2591680-0100		1	HOLDER	**8-265**
A3/FLEX SEPROOM WITHOUT ARL (See drawing on pages: 8-256, 8-258)					
110	1524404-0100		2	COVER	**8-267**
120	1519599-0100		1	ROOF	**8-269**
130	2755891-0100		1	COVER	**8-273**
Common Parts					
010	1499564-0100		1	COVER	**8-275, 8-277**
020	1490190-0200		1	HATCH	**8-281, 8-283**
030	1490191-0100		1	DOOR	**8-293**
040	1558988-0100		1	DOOR	**8-295**
050	1490193-0100		1	COVER	**8-297, 8-299**
060	1498453-0200		1	DOOR	**8-303**
070	1498454-0200		1	DOOR	**8-307**
080	1490188-0100		1	COVER	**8-309**

Pos	Part No	UN	Qty	Description	Page No

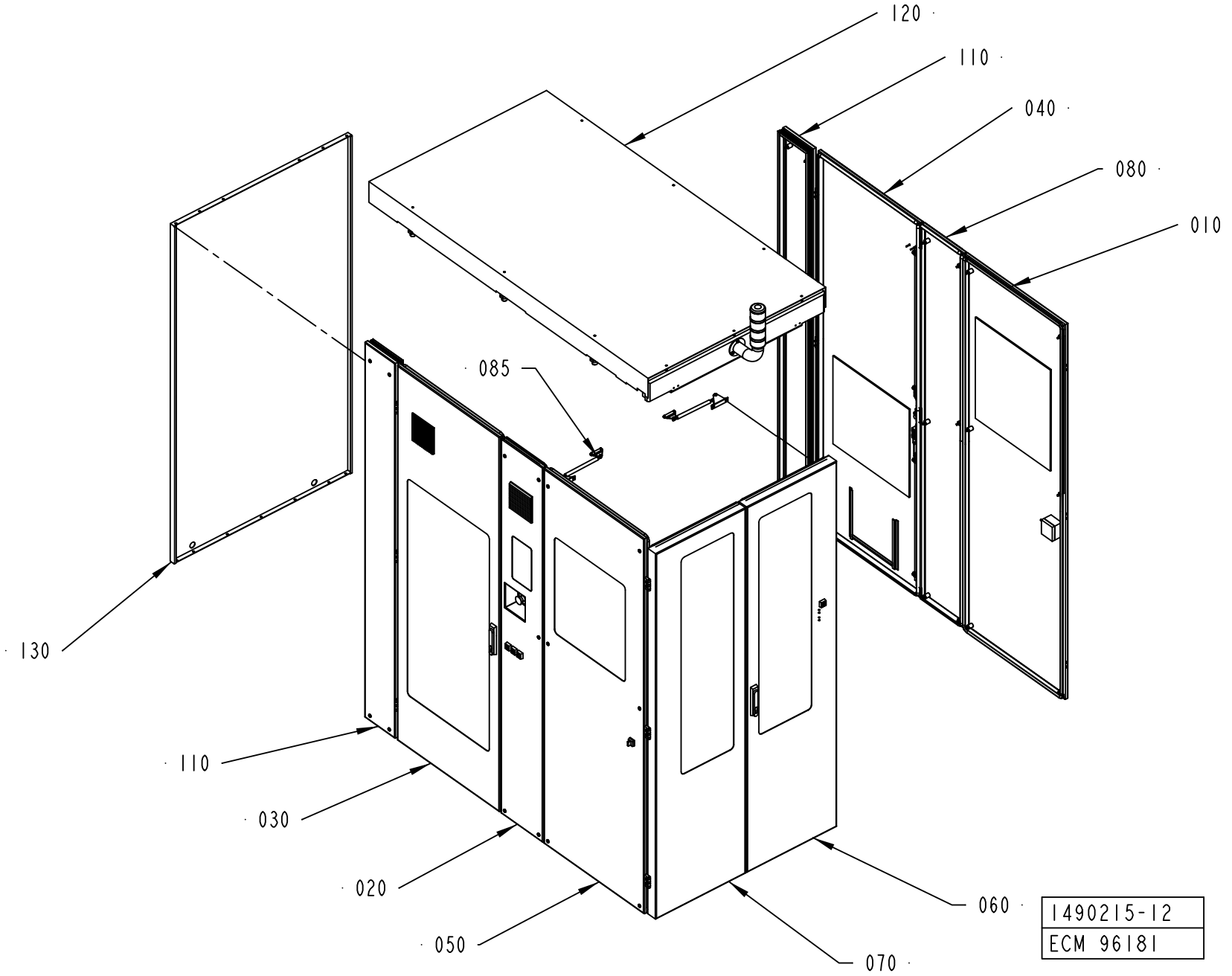
120
110
040
080
010
085
130
110
030
020
050
060
070
1490215-12
ECM 96181

ECM: 273552 - 20061102
Group number: 1490215-0200
Assembly Drawing: 1490215-12_1_AA

This list covers pages from 8-256 to 8-263

Pos	Part No	UN	Qty	Description	Page No
A3/FLEX SEPROOM WITH ARL (See drawing on page: 8-262)					
085	2591680-0100		1	HOLDER	**8-265**
110	1524404-0100		2	COVER	**8-267**
120	1519599-0100		1	ROOF	**8-269**
130	2755891-0100		1	COVER	**8-273**
A3/FLEX ASU WITH ARL (See drawing on page: 8-260)					
085	2591680-0100		1	HOLDER	**8-265**
A3/FLEX SEPROOM WITHOUT ARL (See drawing on pages: 8-256, 8-258)					
110	1524404-0100		2	COVER	**8-267**
120	1519599-0100		1	ROOF	**8-269**
130	2755891-0100		1	COVER	**8-273**
Common Parts					
010	1499564-0100		1	COVER	**8-275, 8-277**
020	1490190-0200		1	HATCH	**8-281, 8-283**
030	1490191-0100		1	DOOR	**8-293**
040	1558988-0100		1	DOOR	**8-295**
050	1490193-0100		1	COVER	**8-297, 8-299**
060	1498453-0200		1	DOOR	**8-303**
070	1498454-0200		1	DOOR	**8-307**
080	1490188-0100		1	COVER	**8-309**

Pos	Part No	UN	Qty	Description	Page No

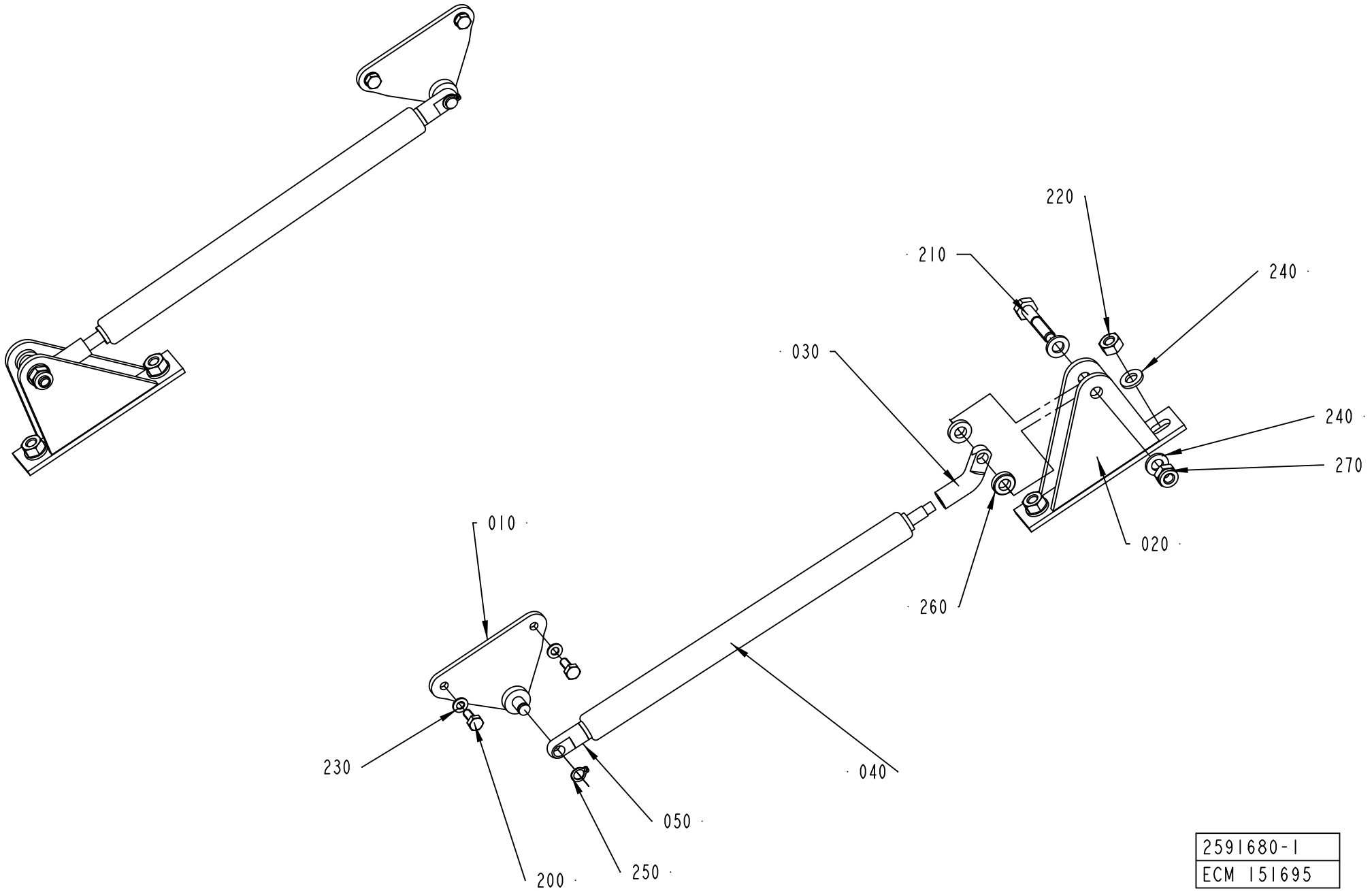

2591680-1
ECM 151695

ECM: 181166 - 20041005
Group number: 2591680-0100
Assembly Drawing: 2591680-1_1_AA

Pos	Part No	UN	Qty	Description	Page No
-					
010	90459-3179		2	GAS SPRING BRACKET, BES/AUG/06/001	
020	2589786-0000		2	BRACKET	
030	2589787-0000		2	FITTING	
040	90459-3181		2	GAS SPRING, G15-150-50N STAINLESS STEEL	
050	90459-3182		2	GAS SPRING FITTING, AU16 STAINLESS STEEL	
200	312105-0289		4	SCREW M6S H4X10 A4 70 ISO4017/DIN933	
210	312105-0374		2	SCREW M6S ISO 4014 M6X30 A480	
220	312605-0316		4	HEXAGON NUT, M6M M6 A280	
230	315105-0136		4	WASHER BRB 4,3X8 RFR	
240	315105-0153		8	WASHER BRB 6,4X12 RFR	
250	315751-0103		2	RETAINING RING FOR SHAFT DIN 471 6 SS	
260	315115-0153		4	WASHER PLAIN, TBRB 6,4/12 H=3	
270	312812-0316		2	HEXAGON NUT, NY-LOCK M6 A480	

Pos	Part No	UN	Qty	Description	Page No

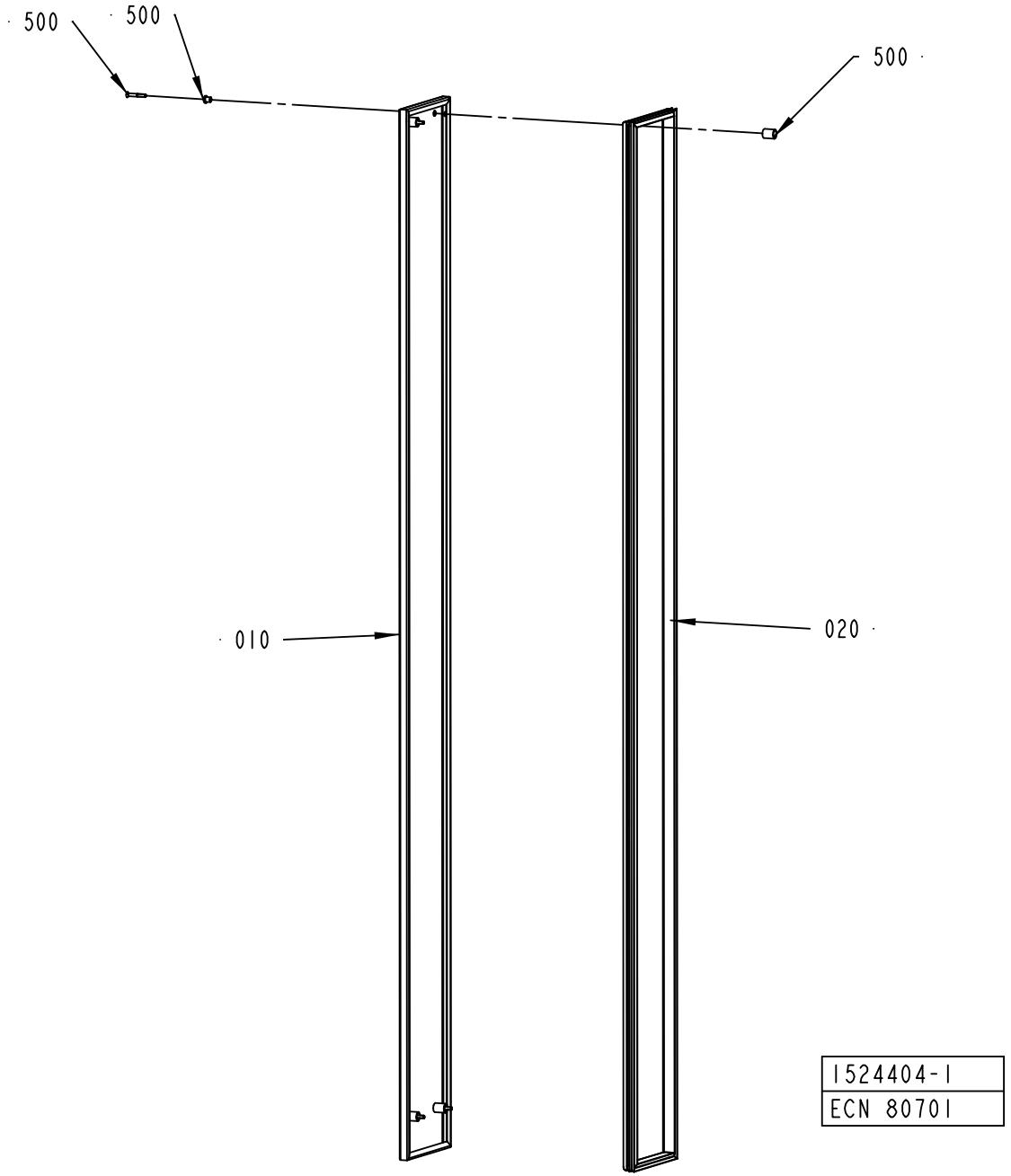
500
500
500
010
020
1524404-1
ECN 80701

ECM: 181165 - 20041005
Group number: 1524404-0100
Assembly Drawing: 1524404-1_1_AA

Pos	Part No	UN	Qty	Description	Page No
-					
010	1524405-0000		1	COVER PLATE	
020	1524406-0000		1	SEALING STRIP	
500	90226-0458		4	MOUNTING SCREW	

Pos	Part No	UN	Qty	Description	Page No

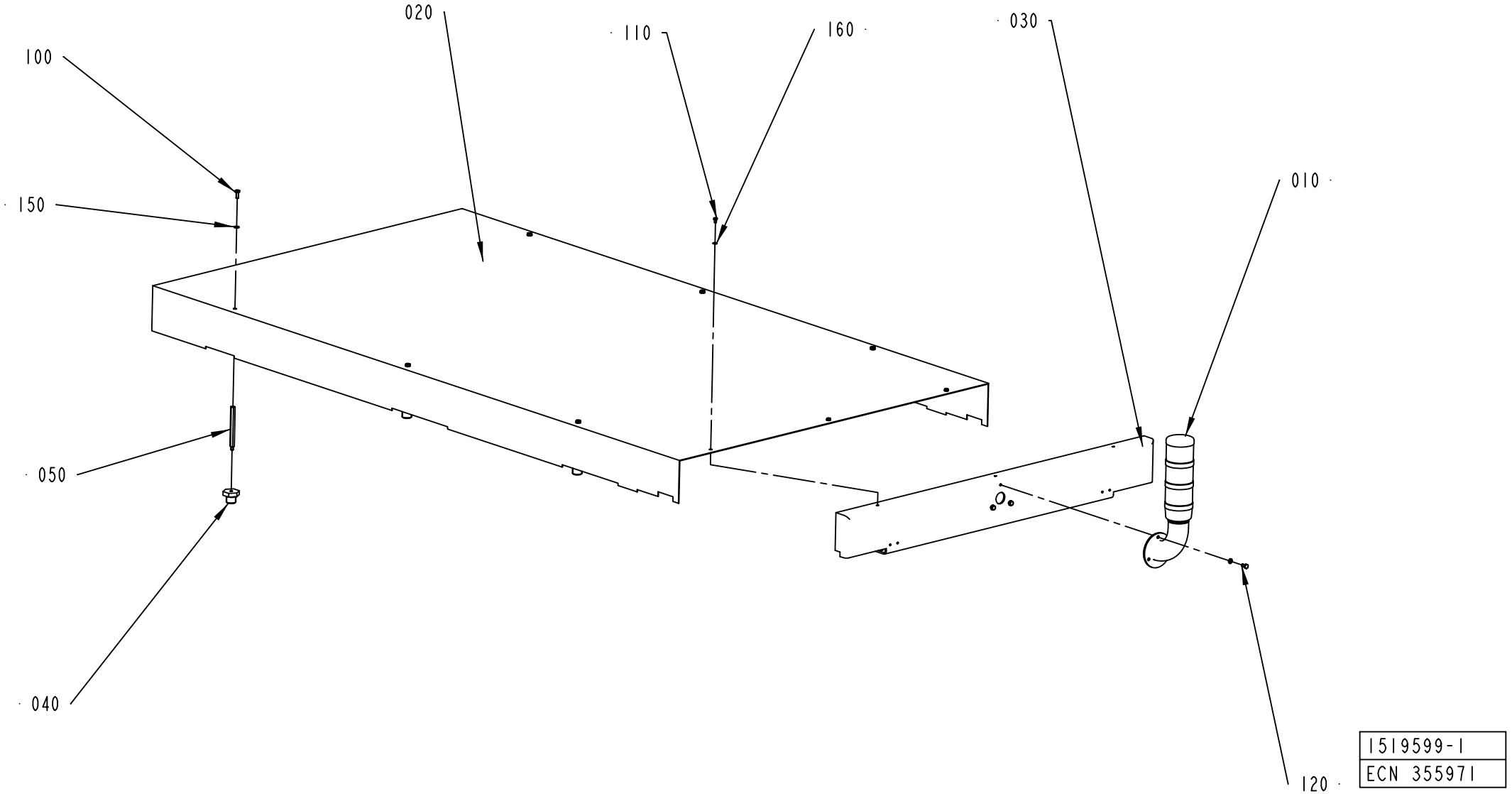
020
110
160
030
100
010
150
050
040
120
1519599-1
ECN 355971

ECM: 355971 - 20081001
Group number: 1519599-0100
Assembly Drawing: 1519599-1_1_AE

Pos	Part No	UN	Qty	Description	Page No
-					
010	2540716-0100		1	SIGNAL LAMP	**2-219, 8-271**
020	1519600-0000		1	COVER PLATE	
030	1519950-0000		1	HOLDER	
040	1346427-0000		6	DISTANCE	
050	1348918-0000		6	DISTANCE	
100	312105-0368		6	SCREW M6S ISO 4017 M6X16 A480	
110	312105-0323		3	SCREW M6S ISO 4017 M5X8 A480	
120	312105-0366		3	SCREW M6S ISO 4017 M6X12 A480	
150	315105-0153		9	WASHER BRB 6,4X12 RFR	
160	315105-0146		3	WASHER BRB 5,3X10 RFR	

Pos	Part No	UN	Qty	Description	Page No

SIGNAL LAMP

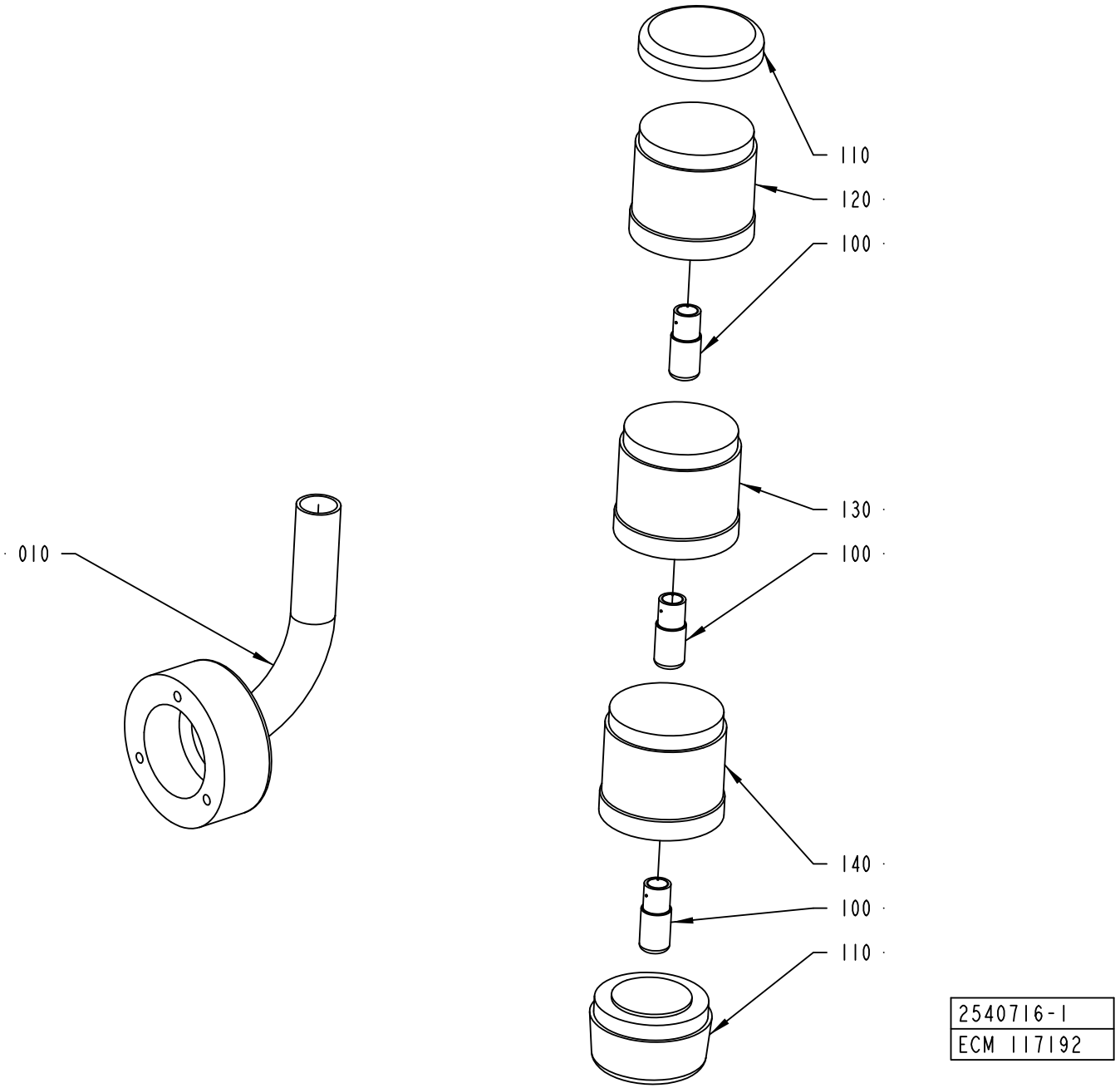

ECM: 189868 - 20041104
Group number: 2540716-0100
Assembly Drawing: 2540716-1_1_AA

Pos	Part No	UN	Qty	Description	Page No
-					
010	2540767-0000		1	PIPE	
100	90036-0068		3	BULB 6.5W 24V	
110	90458-0292		1	BASE, KT70-1001	
120	90458-0293		1	LIGHT ELEMENT, RED, KL70-401R	
130	90458-0294		1	LIGHT ELEMENT, YELLOW, KL70-401Y	
140	90458-0295		1	LIGHT ELEMENT, BLUE, KL70-401L	

Pos	Part No	UN	Qty	Description	Page No

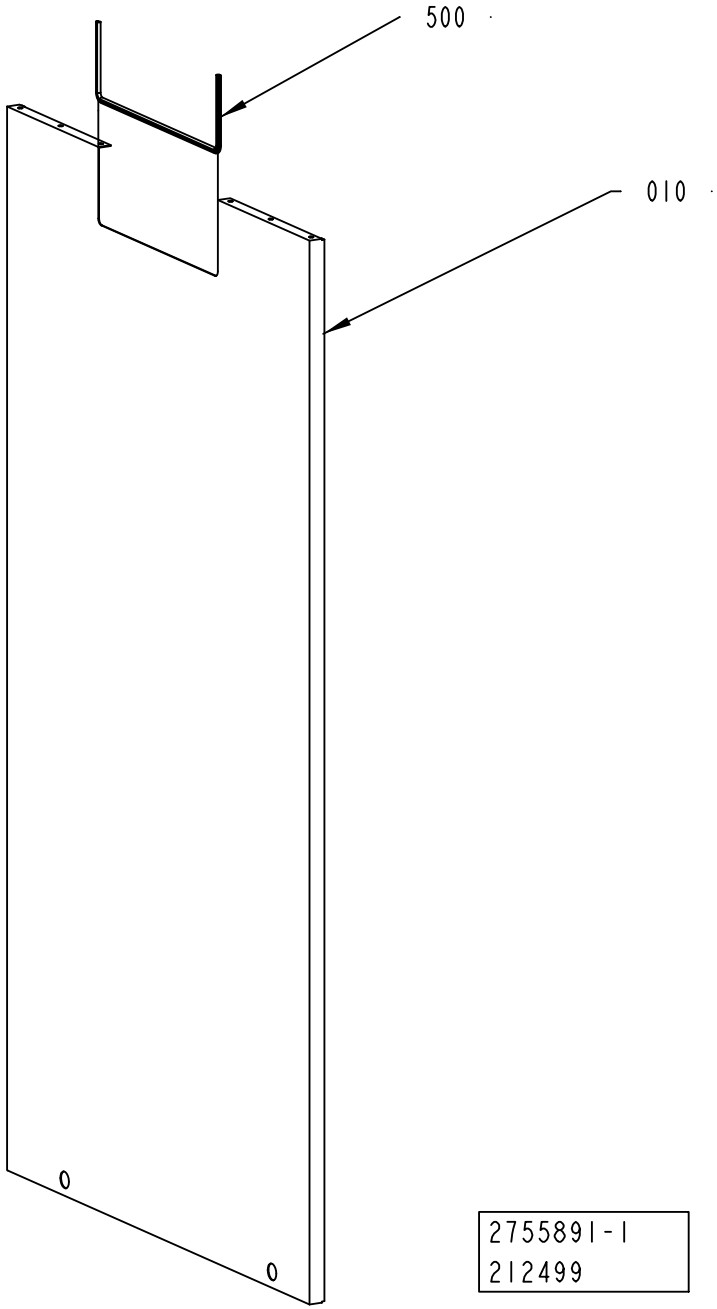
500
010
0
0
2755891-1
212499

ECM: 213433 - 20061102
Group number: 2755891-0100
Assembly Drawing: 2755891-1_1_AA

Pos	Part No	UN	Qty	Description	Page No
-					
010	2748622-0000		1	COVER PLATE	
500	90143-0060	MM	850	EDGE STRIP 9,5X6,3MM BLACK PVC	

Pos	Part No	UN	Qty	Description	Page No

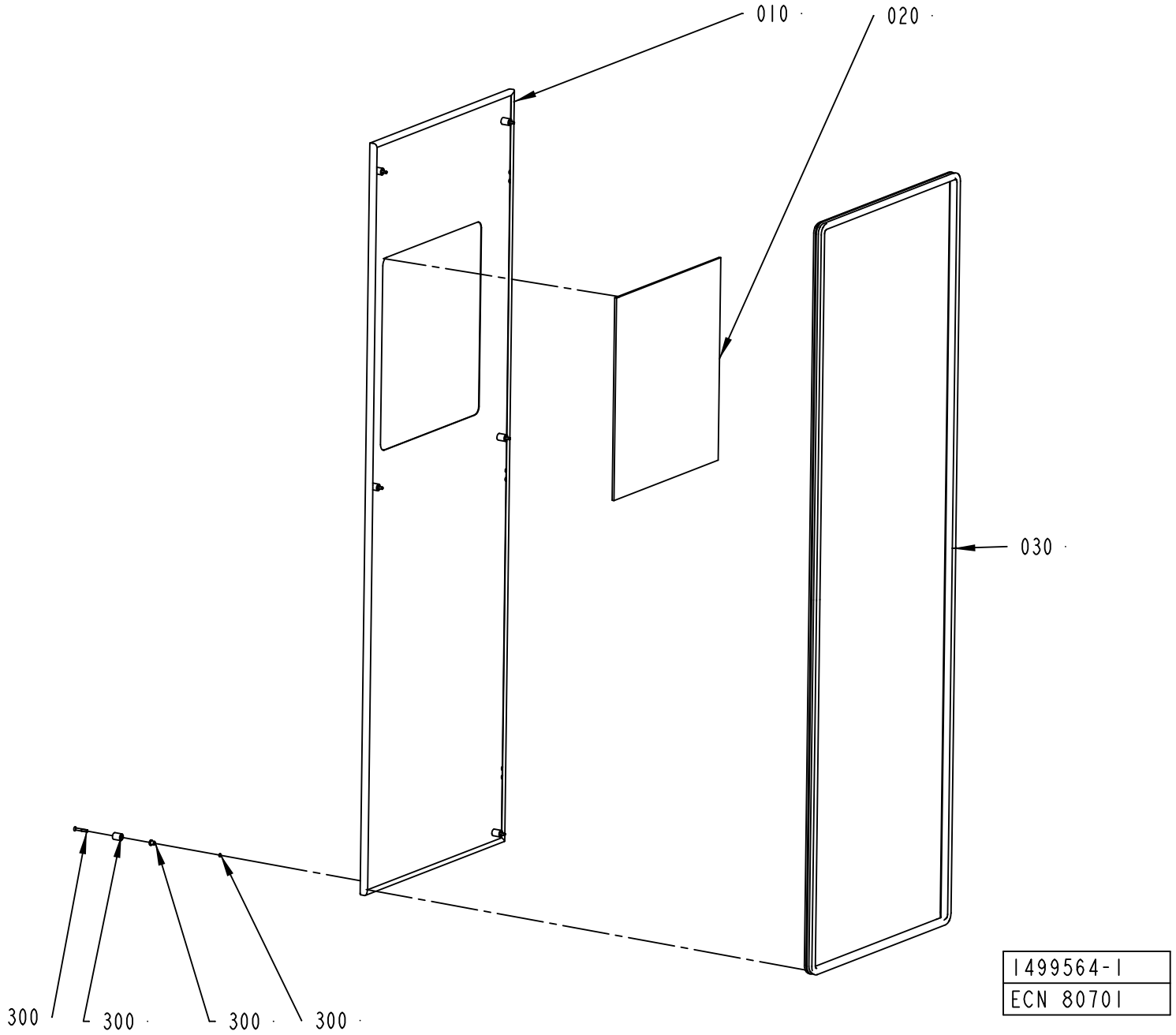
010
020
030
300
300
300
300
1499564-1
ECN 80701

ECM: 249408 - 20060303
Group number: 1499564-0100
Assembly Drawing: 1499564-1_1_AB

This list covers pages from 8-274 to 8-277

Pos	Part No	UN	Qty	Description	Page No
A3/FLEX WITH ARL (See drawing on page: 8-276)					
010	2632542-0000		1	HATCH	
020	1498459-0003		1	GLASS PANE	
040	2632543-0100		1	CONTROL PANEL	**8-279**
A3/FLEX WITHOUT ARL (See drawing on page: 8-274)					
010	1487995-0000		1	HATCH	
020	1498459-0003		1	GLASS PANE	
Common Parts					
030	1498461-0002		1	SEALING STRIP	
300	90226-0458		6	MOUNTING SCREW	

Pos	Part No	UN	Qty	Description	Page No

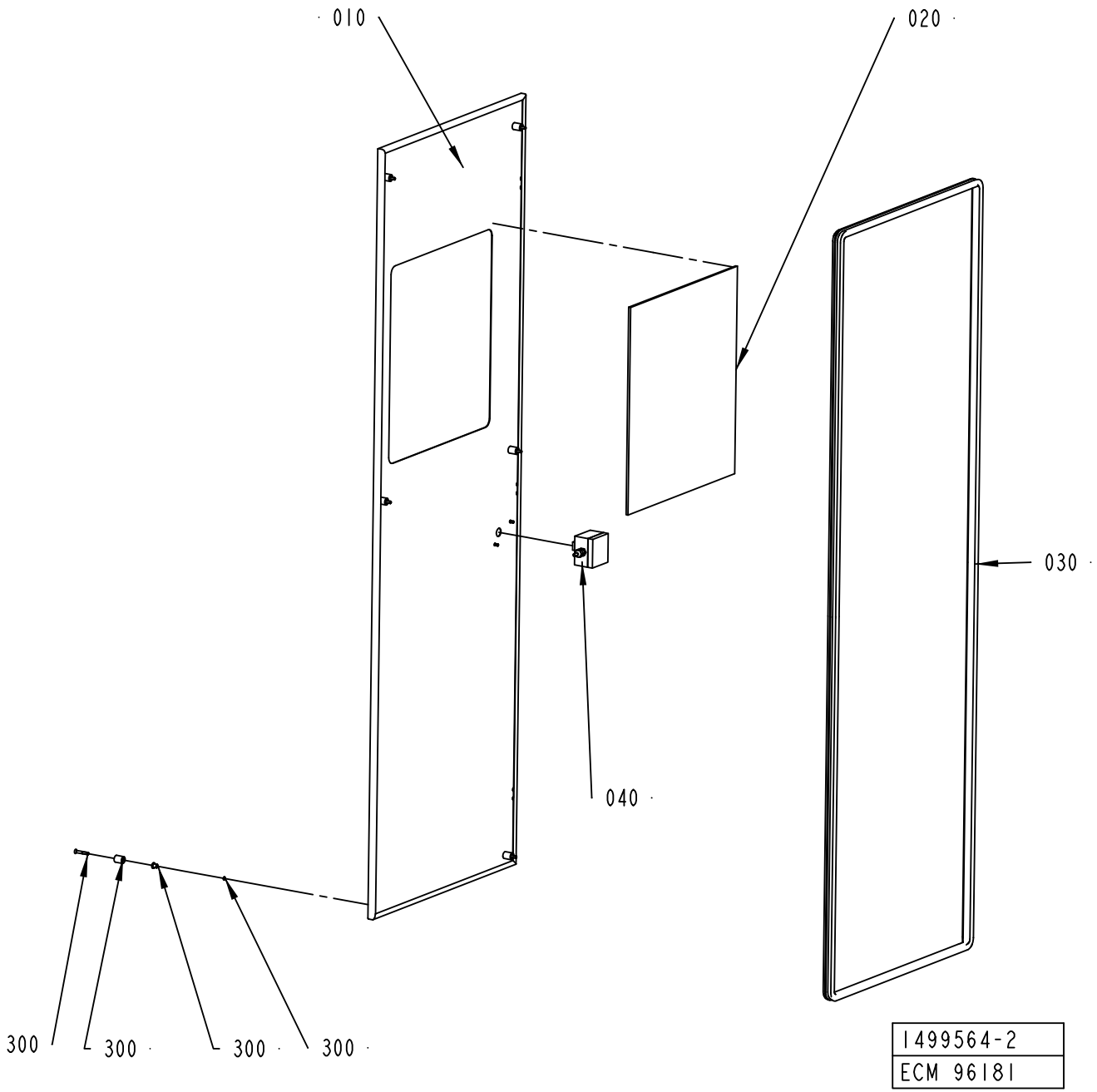
010
020
030
040
300
300
300
300
1499564-2
ECM 96181

ECM: 249408 - 20060303
Group number: 1499564-0100
Assembly Drawing: 1499564-2_1_AA

This list covers pages from 8-274 to 8-277

Pos	Part No	UN	Qty	Description	Page No
A3/FLEX WITH ARL (See drawing on page: 8-276)					
010	2632542-0000		1	HATCH	
020	1498459-0003		1	GLASS PANE	
040	2632543-0100		1	CONTROL PANEL	**8-279**
A3/FLEX WITHOUT ARL (See drawing on page: 8-274)					
010	1487995-0000		1	HATCH	
020	1498459-0003		1	GLASS PANE	
Common Parts					
030	1498461-0002		1	SEALING STRIP	
300	90226-0458		6	MOUNTING SCREW	

Pos	Part No	UN	Qty	Description	Page No

Machine Type | Group Description | Used-In | Group Number | Page No

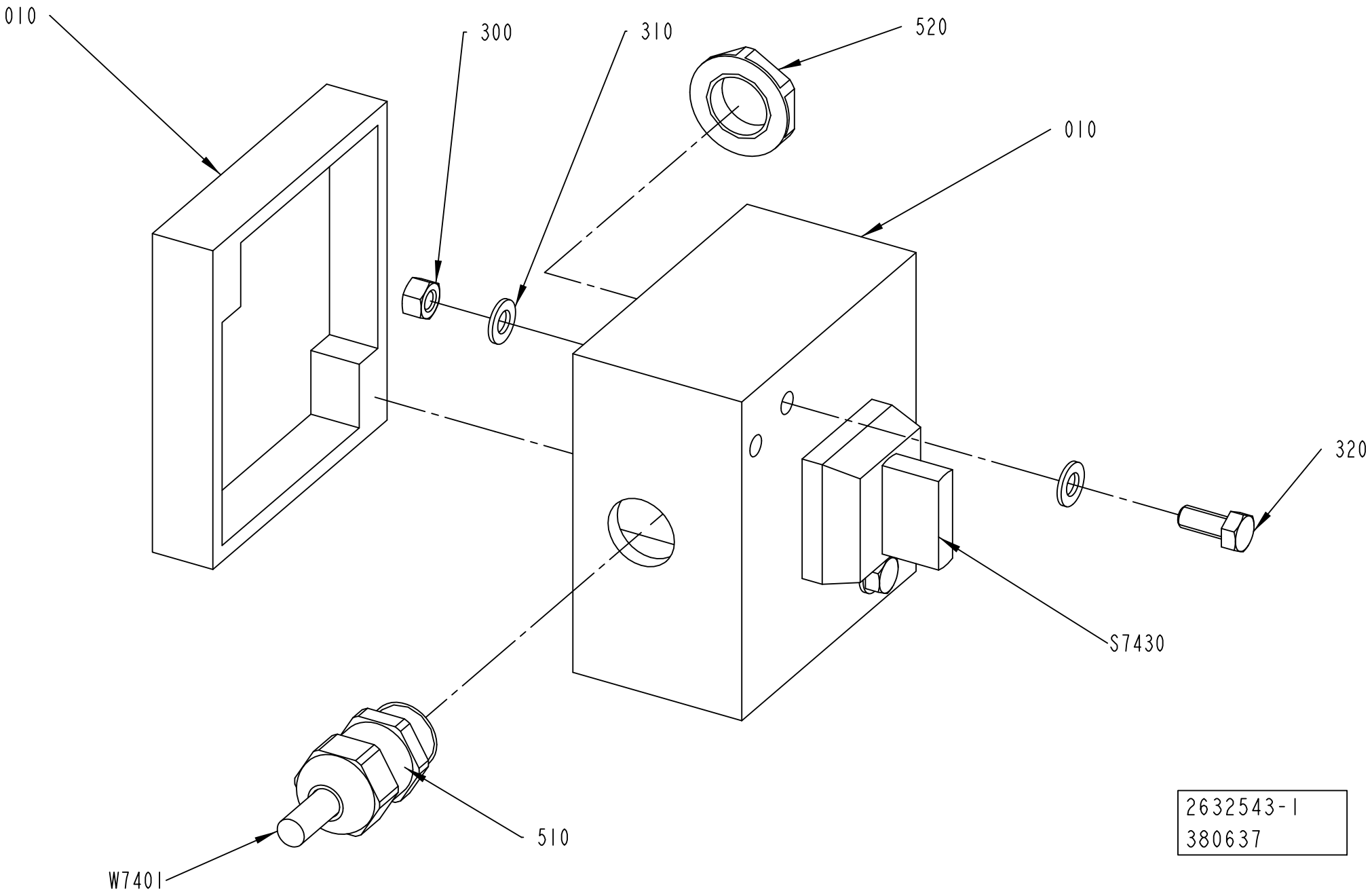
010
300
310
520
010
320
S7430
510
W7401
2632543-1
380637

ECM: 381120 - 20090401
Group number: 2632543-0100
Assembly Drawing: 2632543-1_1_AB

Pos	Part No	UN	Qty	Description	Page No
-					
010	2632535-0000		1	CONNECTION BOX	
300	312605-0314		2	HEXAGON NUT, M6M M5 A280	
310	315105-0146		2	WASHER BRB 5,3X10 RFR	
510	90458-0306		1	CABLE GLAND, M16X1,5, NO.5311 1010	
520	90458-0322		1	NUT, M16X1,5	
S7430	90111-0120		1	SWITCH, 2 POS.704.510 .0A+704.901.5/A	
W7401	351150-0403	MM	8000	CABLE OLFLEX 3X0,75 MM2 LIGHT/GREY	

Pos	Part No	UN	Qty	Description	Page No

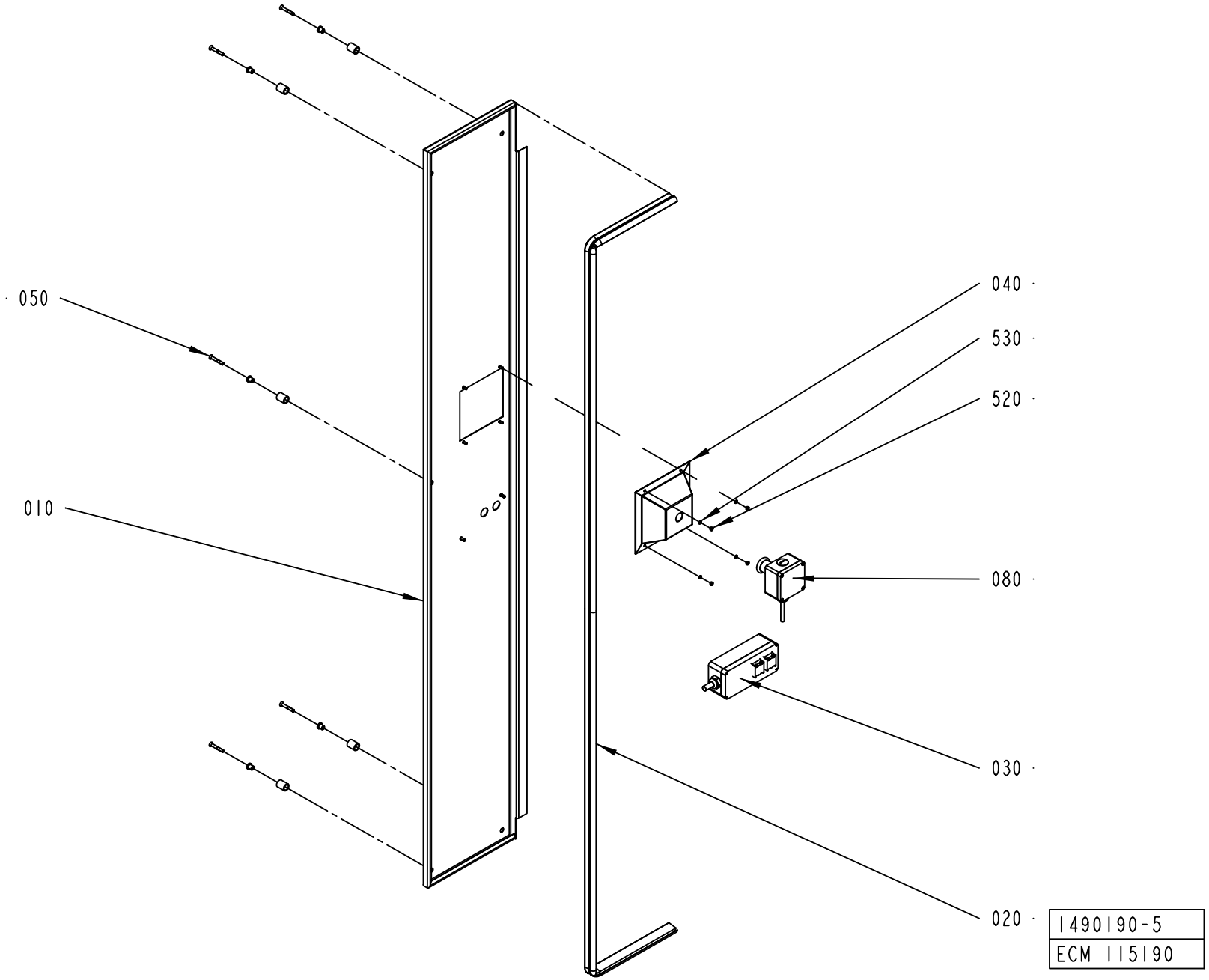
050
010
040
530
520
080
030
020
1490190-5
ECM 115190

ECM: 273532 - 20061102
Group number: 1490190-0200
Assembly Drawing: 1490190-5_1_AB

This list covers pages from 8-280 to 8-283

Pos	Part No	UN	Qty	Description	Page No
A3/FLEX SEPROOM (See drawing on page: 8-282)					
010	2593838-0000		1	HATCH	
060	1490226-0000		1	FILTER	
070	1519947-0100		1	MIMIC PANEL	**8-285**
090	1346423-0000		1	COVER	
500	312605-0314		10	HEXAGON NUT, M6M M5 A280	
510	315105-0146		10	WASHER BRB 5,3X10 RFR	
540	90110-0144		1	COVER D-SUB 9, 8655MH0911LF	
W79011	90220-0092	M	10	PAIR TWISTED CABLE 3X2X0,25MM2	
X79011	90110-0147		1	PLUG D-SUB 9 FEMALE, DE09S064TLF	
A3/FLEX ASU (See drawing on page: 8-280)					
010	2532535-0000		1	HATCH	
Common Parts					
020	1512414-0000		1	SEALING STRIP	
030	1512413-0200		1	CONTROL PANEL	**8-287, 8-289**
040	1484363-0000		1	COVER	
050	90226-0458		5	MOUNTING SCREW	
080	2508187-0100		1	EMERGENCY STOP	**8-291**
520	312605-0312		4	HEXAGON NUT, M6M M4 A280	
530	315105-0136		4	WASHER BRB 4,3X8 RFR	

Pos	Part No	UN	Qty	Description	Page No

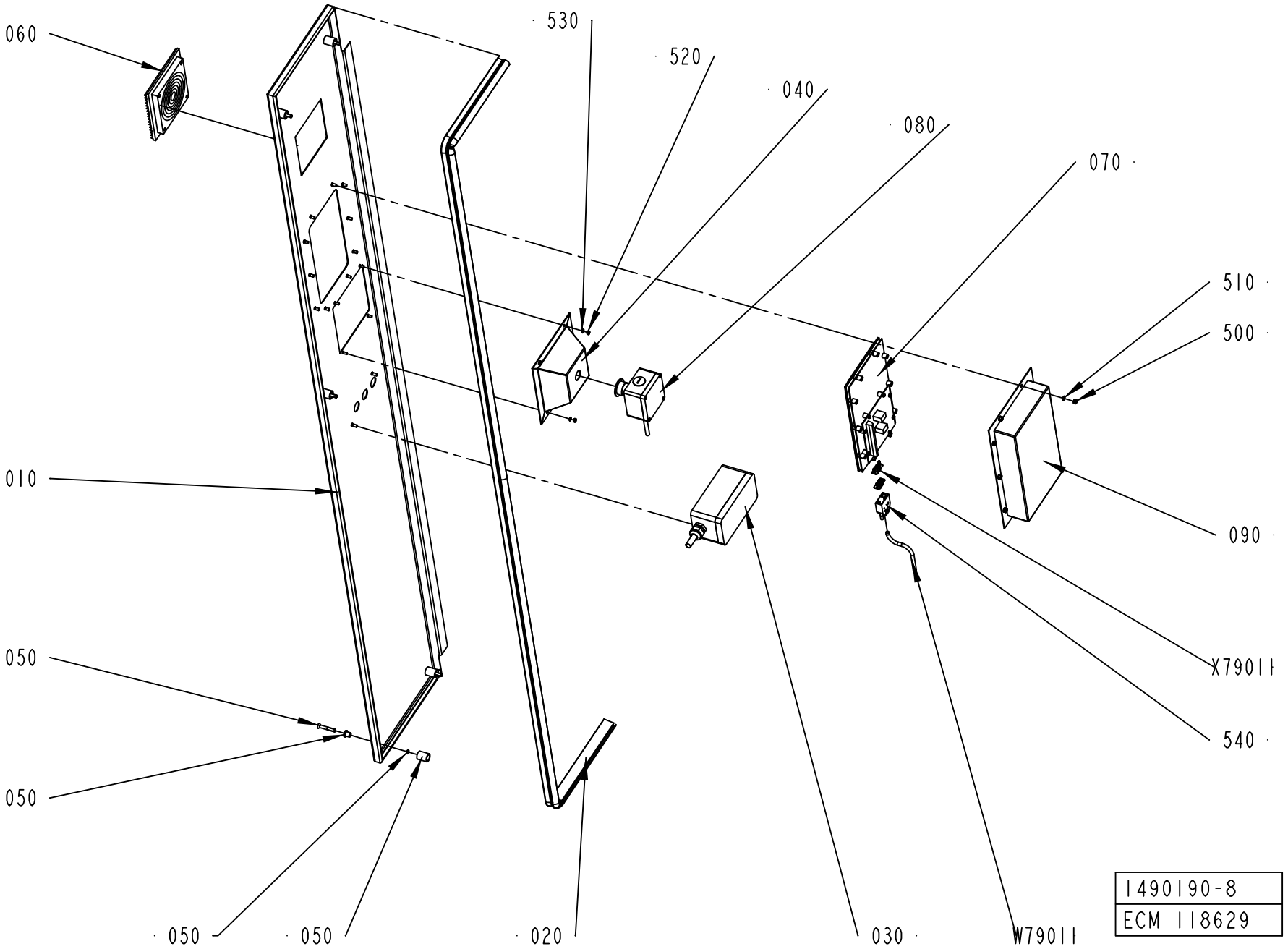
060
530
520
040
080
070
510
500
010
090
050
050
X79011
540
050
050
020
030
W79011
1490190-8
ECM 118629

ECM: 273532 - 20061102
Group number: 1490190-0200
Assembly Drawing: 1490190-8_1_AA

This list covers pages from 8-280 to 8-283

Pos	Part No	UN	Qty	Description	Page No
A3/FLEX SEPROOM (See drawing on page: 8-282)					
010	2593838-0000		1	HATCH	
060	1490226-0000		1	FILTER	
070	1519947-0100		1	MIMIC PANEL	**8-285**
090	1346423-0000		1	COVER	
500	312605-0314		10	HEXAGON NUT, M6M M5 A280	
510	315105-0146		10	WASHER BRB 5,3X10 RFR	
540	90110-0144		1	COVER D-SUB 9, 8655MH0911LF	
W79011	90220-0092	M	10	PAIR TWISTED CABLE 3X2X0,25MM2	
X79011	90110-0147		1	PLUG D-SUB 9 FEMALE, DE09S064TLF	
A3/FLEX ASU (See drawing on page: 8-280)					
010	2532535-0000		1	HATCH	
Common Parts					
020	1512414-0000		1	SEALING STRIP	
030	1512413-0200		1	CONTROL PANEL	**8-287, 8-289**
040	1484363-0000		1	COVER	
050	90226-0458		5	MOUNTING SCREW	
080	2508187-0100		1	EMERGENCY STOP	**8-291**
520	312605-0312		4	HEXAGON NUT, M6M M4 A280	
530	315105-0136		4	WASHER BRB 4,3X8 RFR	

Pos	Part No	UN	Qty	Description	Page No

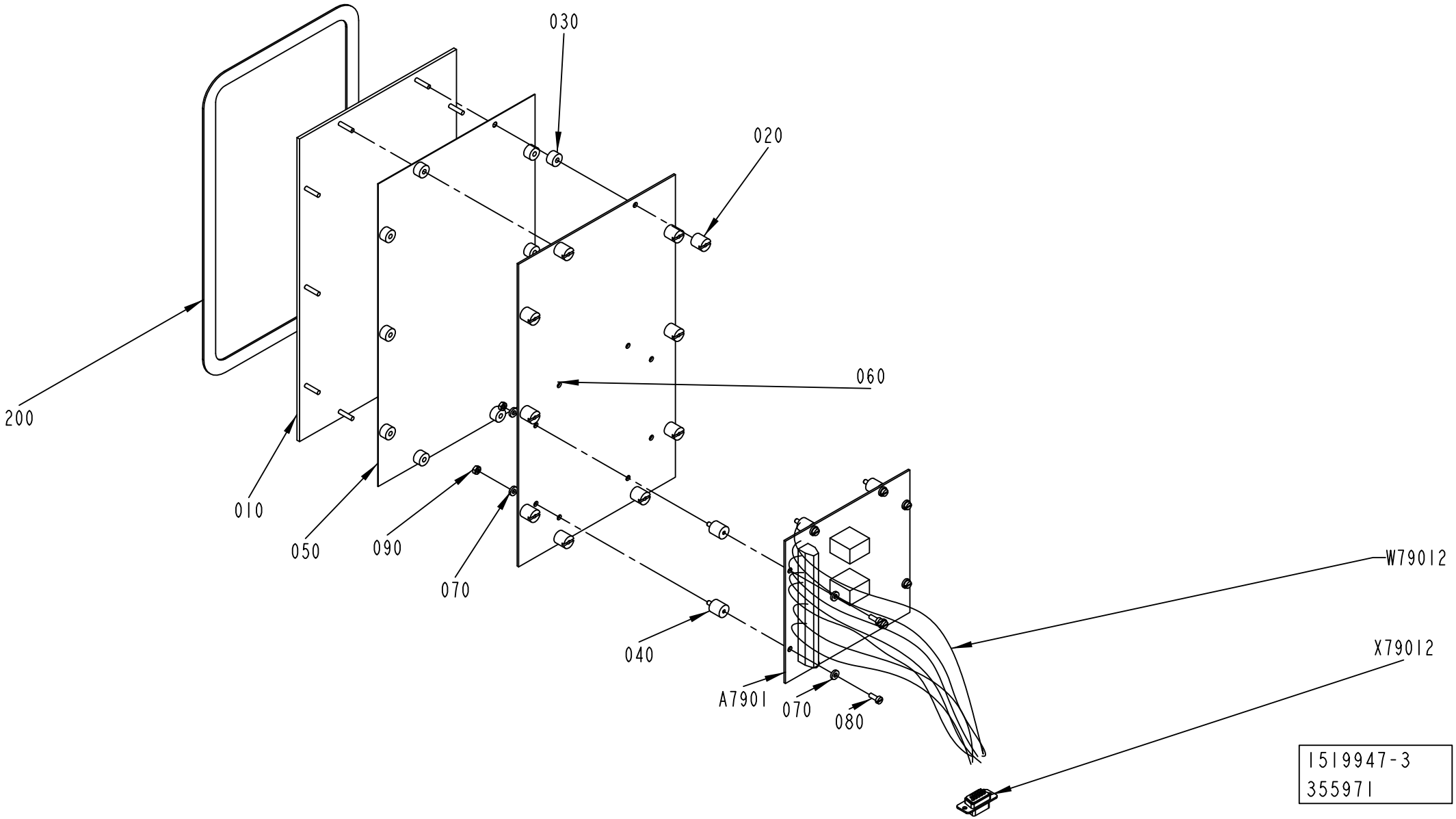
030
020
200
060
010
050
090
070
040
W79012
X79012
A7901
070
080
1519947-3
355971

ECM: 355971 - 20081001
Group number: 1519947-0100
Assembly Drawing: 1519947-3_1_AB

Pos	Part No	UN	Qty	Description	Page No
A3/FLEX					
050	2770885-0000		1	CONTROL PANEL DISPLAY	
060	2785993-0000		1	CIRCUIT BOARD	
Common Parts					
010	599556-0000		1	WINDOW	
020	970261-0000		10	SPACER SCREW 10,2X10MM	
030	971286-0000		10	SPACER H=6MM	
040	970262-0000		8	SPACER NUT	
070	1488007-0000		16	WASHER	
080	312125-0222		8	SCREW ISO 1207 M3X8 A4	
090	312605-0310		8	HEXAGON NUT, M6M M3 A280	
200	90144-0044		1	TAPE SCOTCH VHB 4945;12,7MM	
A7901	68699-0101		1	MULTIPLEXER CARD 56LED	
010	*578860-0000*		*1*	*CIRCUIT BOARD*	
020	*578861-0001*			*COMPONENTS WITHOUT TP-NO*	
W79012	351179-0102	MM	4000	CABLE AWM 1X075 MM2 BLACK	
X79012	90110-0141		1	PLUG D-SUB 9 MALE, DE09P064TXLF	

Pos	Part No	UN	Qty	Description	Page No

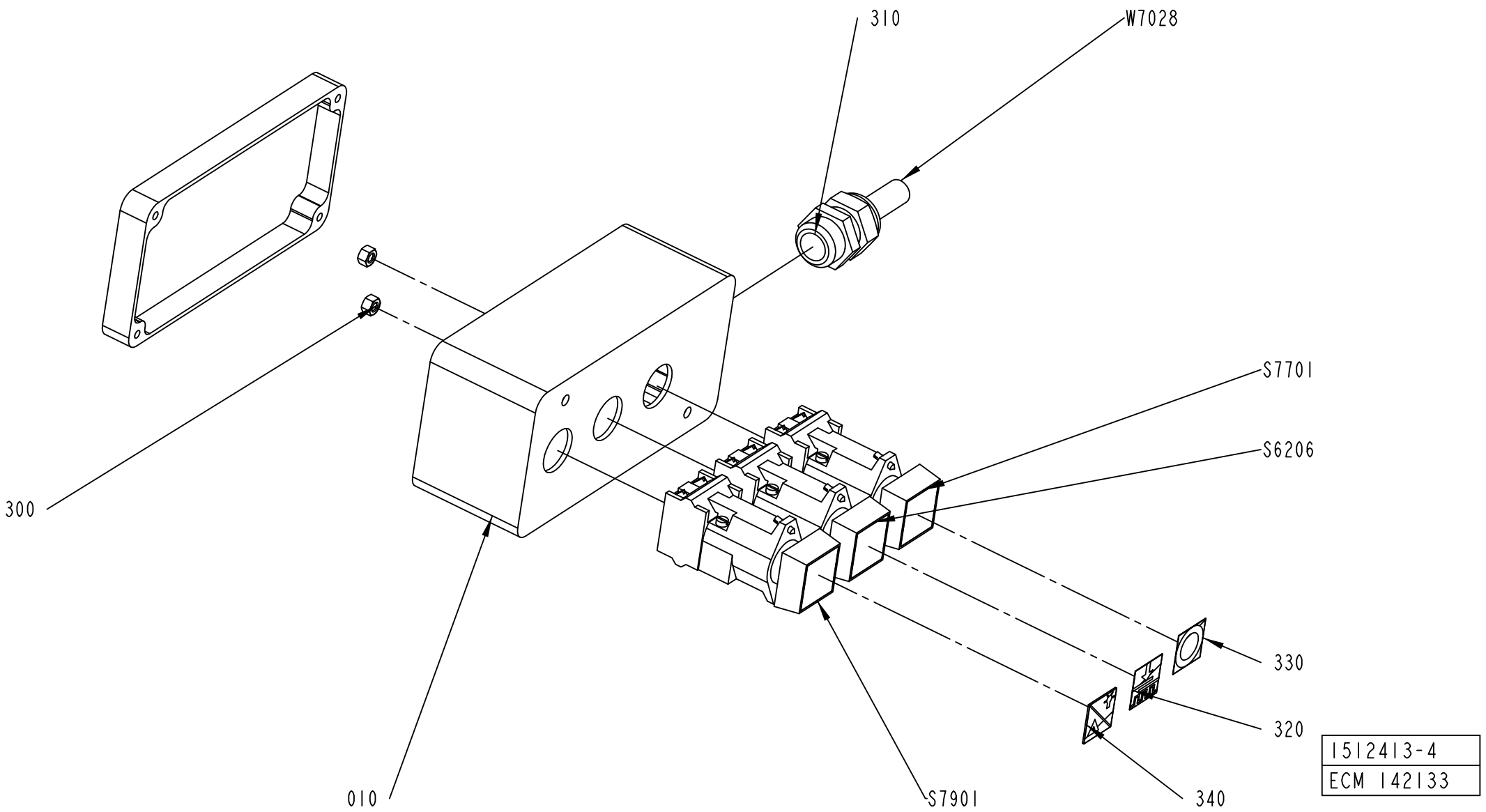
310
W7028
S7701
S6206
300
330
320
010
S7901
340
1512413-4
ECM 142133

ECM: 273551 - 20061102
Group number: 1512413-0200
Assembly Drawing: 1512413-4_1_AB

This list covers pages from 8-286 to 8-289

Pos	Part No	UN	Qty	Description	Page No
A3/FLEX SEPROOM (See drawing on page: 8-286)					
010	2593982-0000		1	PUSH BUTTON BOX	
340	359301-0131		1	BUTTON SIGN, LAMP TEST / RESET	
S7901	90064-0082		1	PUSH BUTTON, WHITE	
	90036-0057		*1*	*LIGHT BULB, BA9S 28V*	
A3/FLEX ASU (See drawing on page: 8-288)					
010	2578785-0000		1	PUSH BUTTON BOX	
Common Parts					
300	312605-0314		2	HEXAGON NUT, M6M M5 A280	
310	352103-0111		1	CABLE GLAND, ST 16, PR22,5/PG16	
320	359301-0101		1	BUTTON SIGN, STRIP SPLICING ON	
330	359301-0110		1	BUTTON SIGN, SHORT STOP	
S6206	90064-0082		1	PUSH BUTTON, WHITE	
	90036-0057		*1*	*LIGHT BULB, BA9S 28V*	
S7701	90064-0084		1	PUSH BUTTON, YELLOW	
W7028	351150-0407	MM	5000	CABLE OLFLEX 12X0,75 MM2 LIGHT/GREY	

Pos	Part No	UN	Qty	Description	Page No

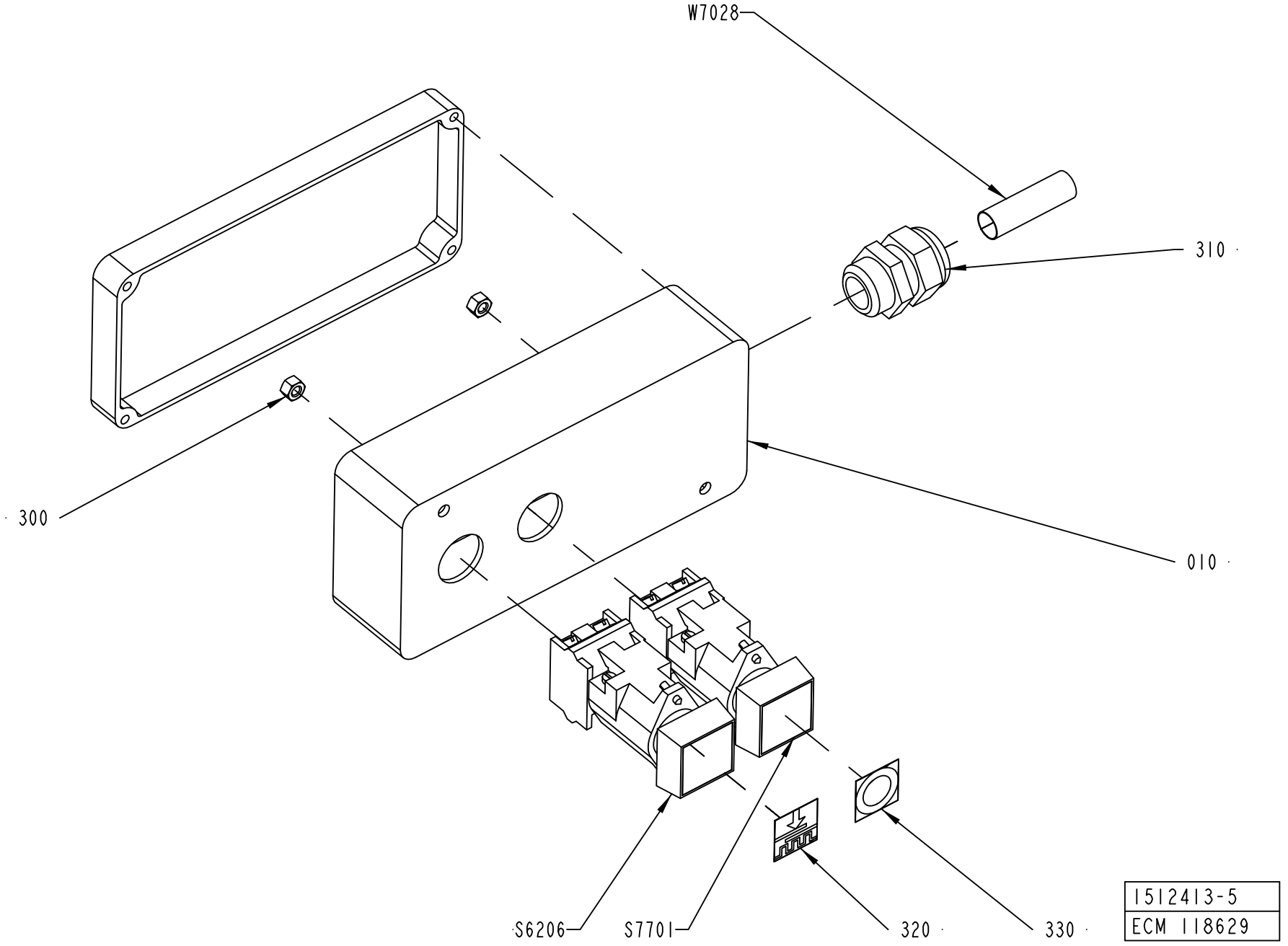
W7028
310
300
010
S6206
S7701
320
330
1512413-5
ECM 118629

ECM: 273551 - 20061102
Group number: 1512413-0200
Assembly Drawing: 1512413-5_1_AA

This list covers pages from 8-286 to 8-289

Pos	Part No	UN	Qty	Description	Page No
A3/FLEX SEPROOM (See drawing on page: 8-286)					
010	2593982-0000		1	PUSH BUTTON BOX	
340	359301-0131		1	BUTTON SIGN, LAMP TEST / RESET	
S7901	90064-0082		1	PUSH BUTTON, WHITE	
	90036-0057		*1*	*LIGHT BULB, BA9S 28V*	
A3/FLEX ASU (See drawing on page: 8-288)					
010	2578785-0000		1	PUSH BUTTON BOX	
Common Parts					
300	312605-0314		2	HEXAGON NUT, M6M M5 A280	
310	352103-0111		1	CABLE GLAND, ST 16, PR22,5/PG16	
320	359301-0101		1	BUTTON SIGN, STRIP SPLICING ON	
330	359301-0110		1	BUTTON SIGN, SHORT STOP	
S6206	90064-0082		1	PUSH BUTTON, WHITE	
	90036-0057		*1*	*LIGHT BULB, BA9S 28V*	
S7701	90064-0084		1	PUSH BUTTON, YELLOW	
W7028	351150-0407	MM	5000	CABLE OLFLEX 12X0,75 MM2 LIGHT/GREY	

Pos	Part No	UN	Qty	Description	Page No

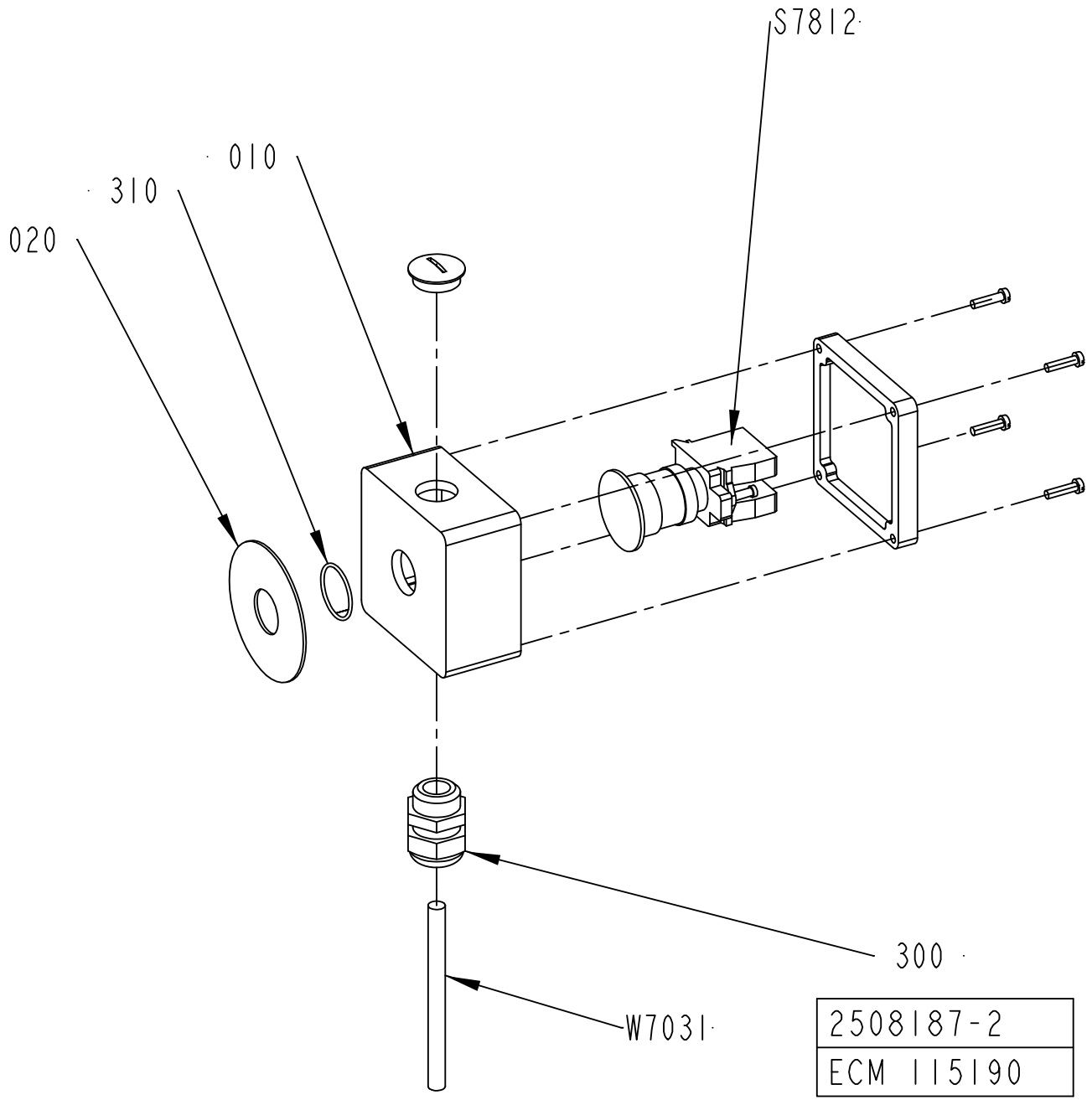
S7812
010
310
020
300
W7031
2508187-2
ECM 115190

ECM: 181016 - 20041005
Group number: 2508187-0100
Assembly Drawing: 2508187-2_1_AB

Pos	Part No	UN	Qty	Description	Page No
-					
010	1037130-0000		1	CONNECTION BOX	
020	486826-0001		1	SIGN "EMERGENCY STOP"	
300	352103-0110		1	CABLE GLAND, STR 16, PR22,5/PG16	
310	315202-0119		1	O-RING 25,1X1,6 MM	
S7812	90458-1651		1	EMERGENCY STOP, ZB4-BS-844 ZB4-BZ-104	
W7031	351150-0405	MM	5000	CABLE OLFLEX 5X0,75 MM2 LIGHT/GREY	

Pos	Part No	UN	Qty	Description	Page No

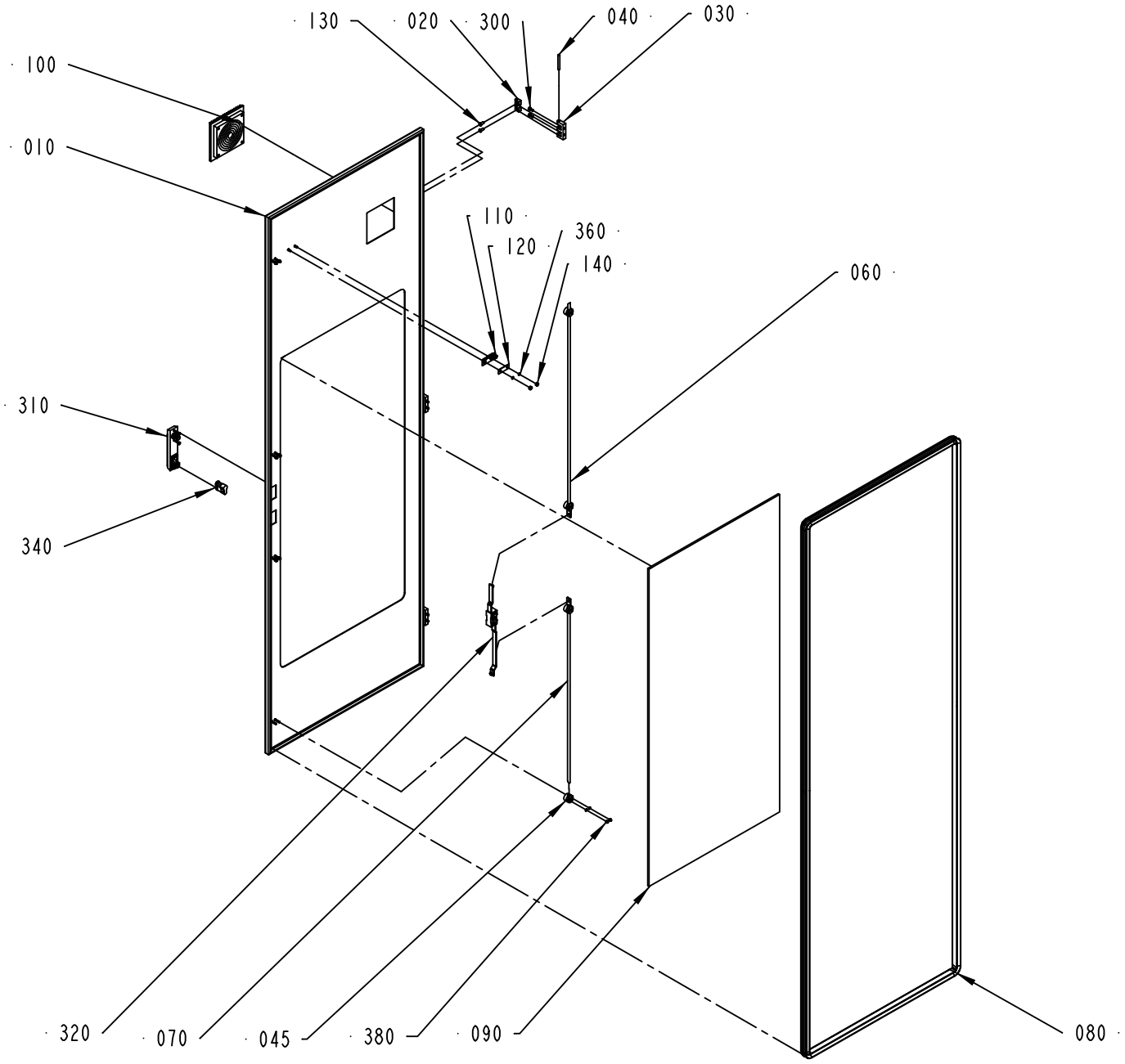

1490191-2
ECM 118629

ECM: 341204 - 20080215
Group number: 1490191-0100
Assembly Drawing: 1490191-2_1_AF

Pos	Part No	UN	Qty	Description	Page No
A3/FLEX					
010	1488000-0000		1	DOOR	
090	1498459-0002		1	GLASS PANE	
Common Parts					
020	1129770-0000		6	BLOCKING PIECE	
030	1035792-0000		3	E-HINGE	
040	988685-0000		3	PIN	
045	2550333-0000		4	GUIDE LUG	
060	1499562-0003		1	LOCKING ARM	
070	1499562-0004		1	LOCKING ARM	
080	1498461-0005		1	SEALING STRIP	
100	1490226-0000		1	FILTER	
110	975917-0000		1	KEY FOR SAFETY SWITCH 90044-103	
120	1036563-0000		1	WASHER	
130	1129767-0000		6	SCREW	
140	1539391-0000		2	ROUND NUT	
300	312115-0327		6	SCREW ISO4762 M5X12 A4 80	
310	90237-0175		1	TURNING HANDLE, 1125-U185-0A	
320	90237-0153		1	LOCK HOUSING, 1121-U26-0B	
340	90237-0128		1	LOCK CYLINDER, 1109-SU125	
360	315105-0136		10	WASHER BRB 4,3X8 RFR	
380	312705-0312		8	NUT HEX. DOMED CAP MHM-6 M4 A280	

Pos	Part No	UN	Qty	Description	Page No

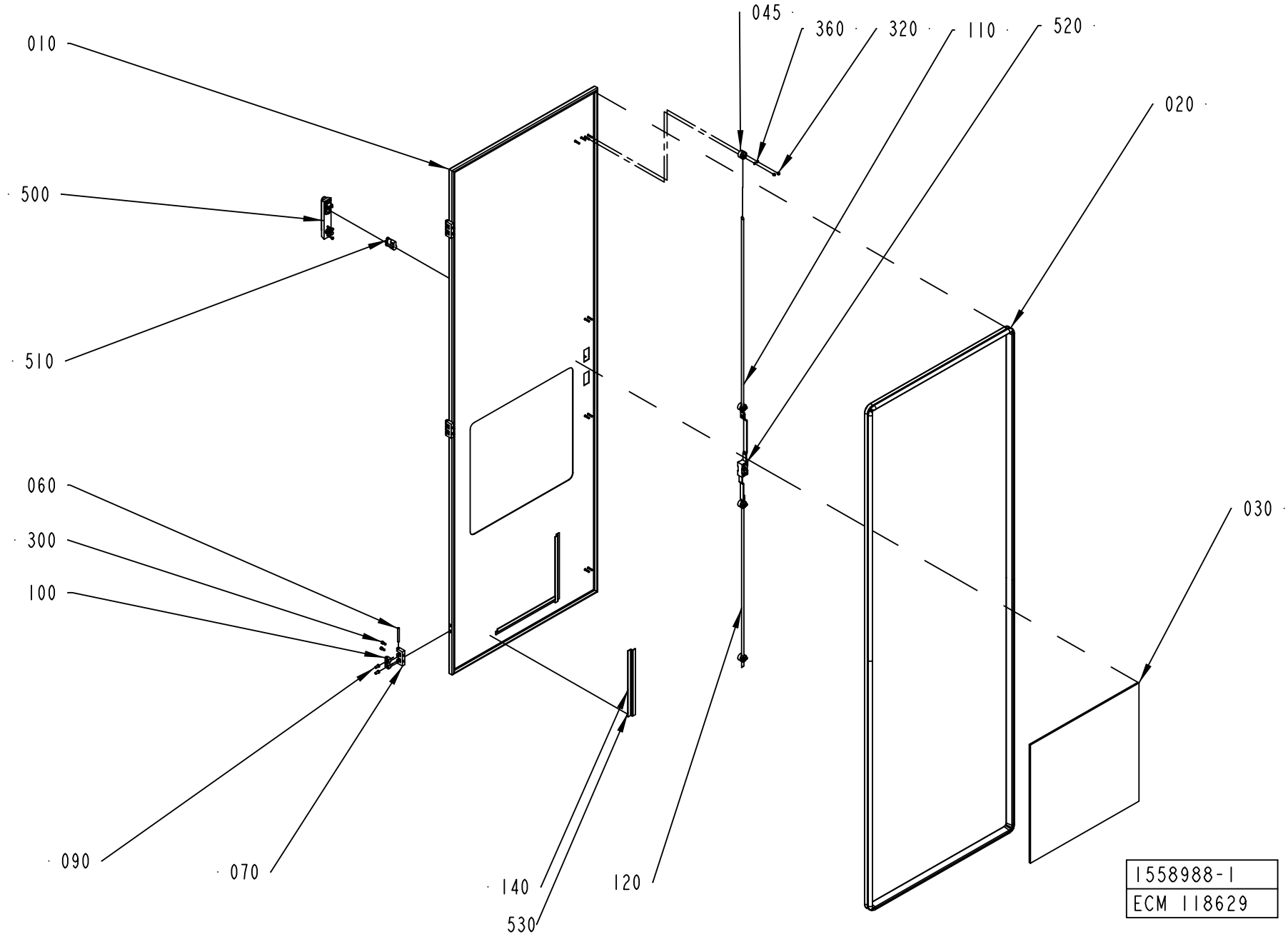
045
360
320
110
520
010
020
500
510
060
300
100
030
090
070
140
120
530
1558988-1
ECM 118629

ECM: 341213 - 20080215
Group number: 1558988-0100
Assembly Drawing: 1558988-1_1_AD

Pos	Part No	UN	Qty	Description	Page No
A3/FLEX					
010	1558983-0000		1	DOOR	
030	1498459-0004		1	GLASS PANE	
Common Parts					
020	1498461-0005		1	SEALING STRIP	
045	2550333-0000		4	GUIDE LUG	
060	988685-0000		3	PIN	
070	1035792-0000		3	E-HINGE	
090	1129767-0000		6	SCREW	
100	1129770-0000		6	BLOCKING PIECE	
110	1499562-0003		1	LOCKING ARM	
120	1499562-0004		1	LOCKING ARM	
140	988690-0000		3	RIM	
300	312115-0327		6	SCREW ISO4762 M5X12 A4 80	
320	312705-0312		8	NUT HEX. DOMED CAP MHM-6 M4 A280	
360	315105-0136		8	WASHER BRB 4,3X8 RFR	
500	90237-0175		1	TURNING HANDLE, 1125-U185-0A	
510	90237-0128		1	LOCK CYLINDER, 1109-SU125	
520	90237-0153		1	LOCK HOUSING, 1121-U26-0B	
530	90144-0072	MM	840	TAPE SCOTCH VHBS 4945 W=12,7MM	

Pos	Part No	UN	Qty	Description	Page No

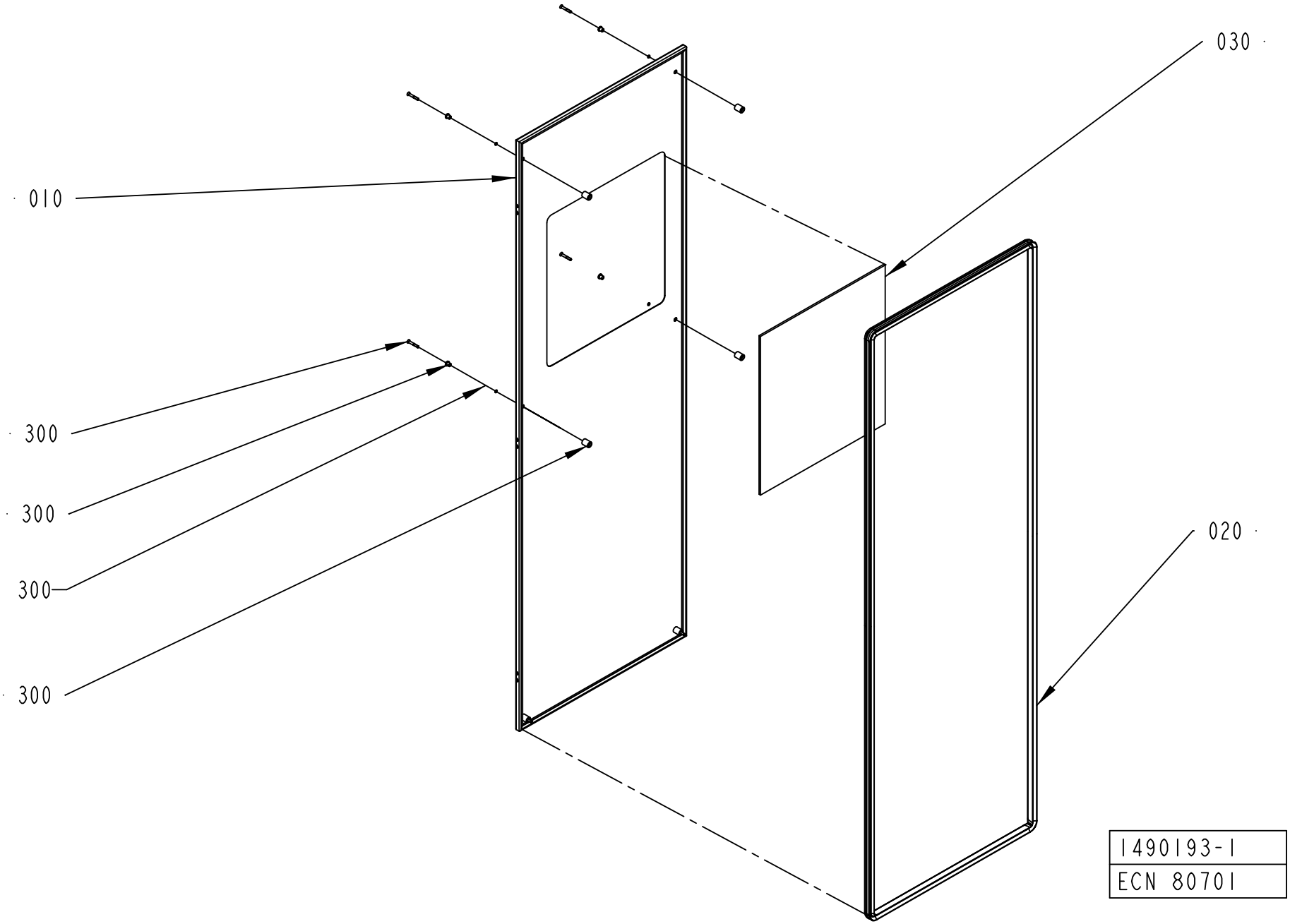
030
010
300
300
300
300
020
1490193-1
ECN 80701

ECM: 249411 - 20060303
Group number: 1490193-0100
Assembly Drawing: 1490193-1_1_AB

This list covers pages from 8-296 to 8-299

Pos	Part No	UN	Qty	Description	Page No
A3/FLEX WITH ARL (See drawing on page: 8-298)					
010	2632534-0000		1	HATCH	
030	1498459-0003		1	GLASS PANE	
040	2632536-0100		1	CONTROL PANEL	**8-301**
A3/FLEX WITHOUT ARL (See drawing on page: 8-296)					
010	1498460-0000		1	HATCH	
030	1498459-0003		1	GLASS PANE	
Common Parts					
020	1498461-0002		1	SEALING STRIP	
300	90226-0458		6	MOUNTING SCREW	

Pos	Part No	UN	Qty	Description	Page No

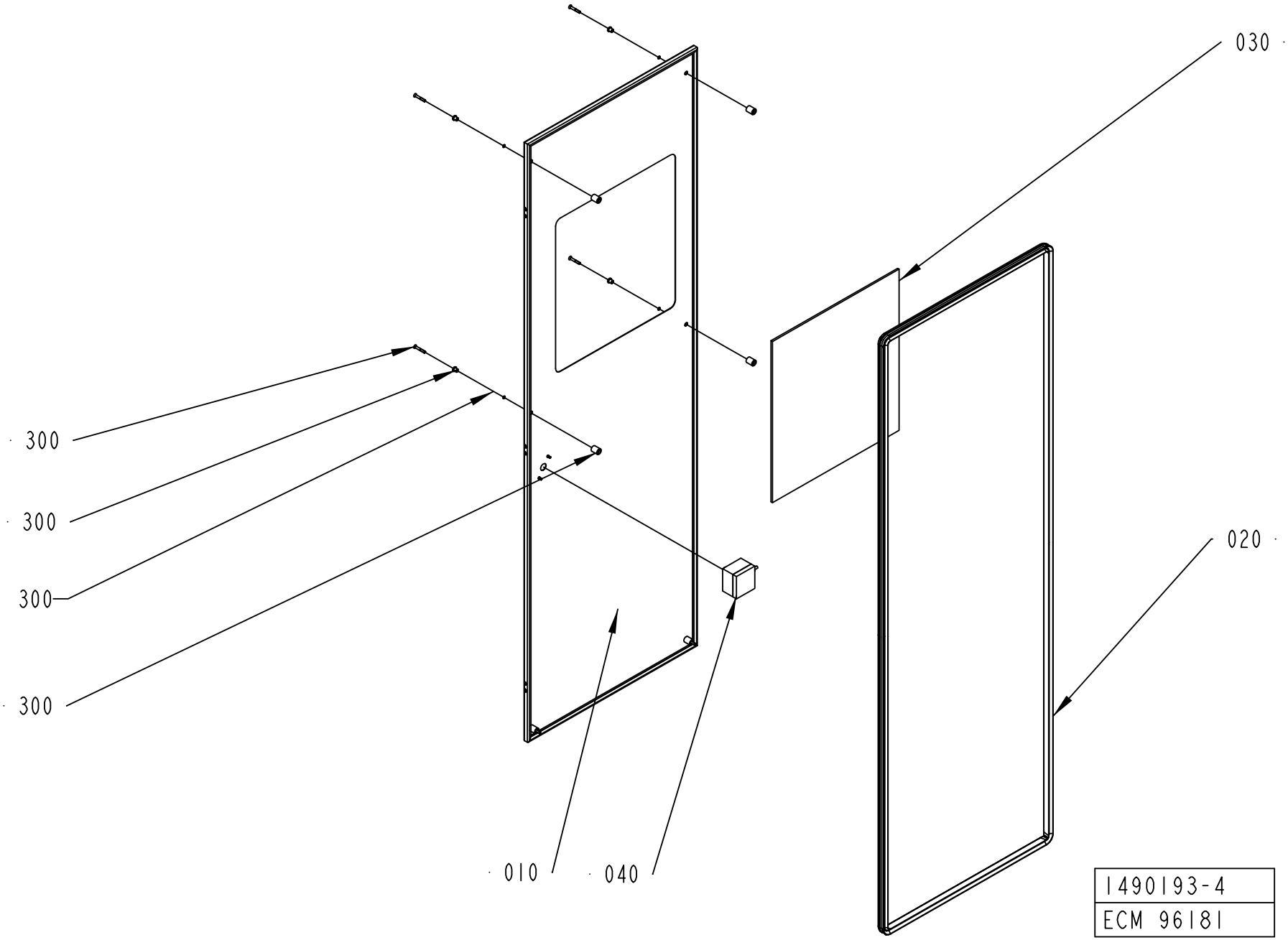
030
300
300
300
300
020
010
040
1490193-4
ECM 96181

ECM: 249411 - 20060303
Group number: 1490193-0100
Assembly Drawing: 1490193-4_1_AA

This list covers pages from 8-296 to 8-299

Pos	Part No	UN	Qty	Description	Page No
A3/FLEX WITH ARL (See drawing on page: 8-298)					
010	2632534-0000		1	HATCH	
030	1498459-0003		1	GLASS PANE	
040	2632536-0100		1	CONTROL PANEL	**8-301**
A3/FLEX WITHOUT ARL (See drawing on page: 8-296)					
010	1498460-0000		1	HATCH	
030	1498459-0003		1	GLASS PANE	
Common Parts					
020	1498461-0002		1	SEALING STRIP	
300	90226-0458		6	MOUNTING SCREW	

Pos	Part No	UN	Qty	Description	Page No

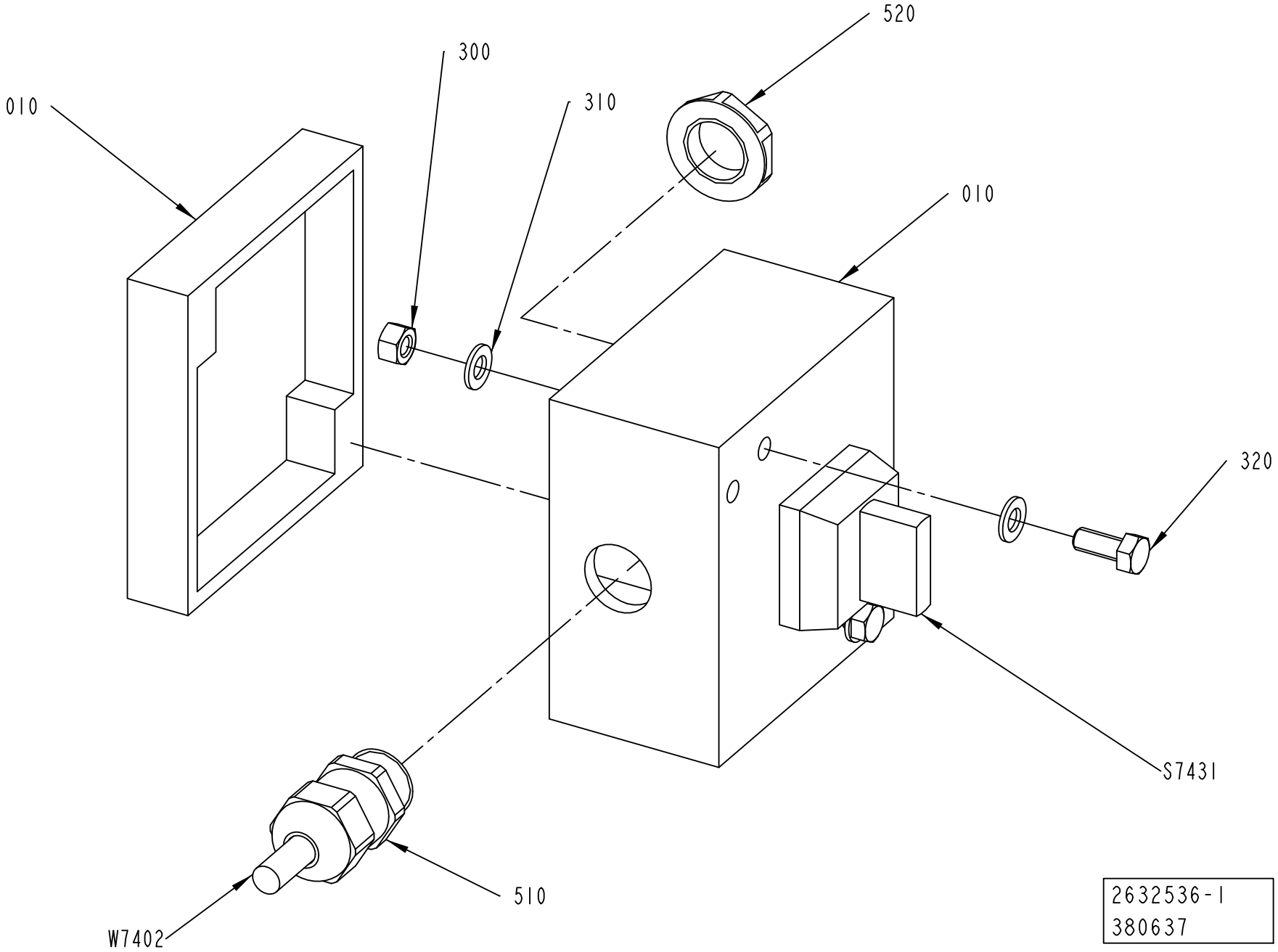
520
300
310
010
010
320
S7431
510
W7402
2632536-1
380637

ECM: 381119 - 20090401
Group number: 2632536-0100
Assembly Drawing: 2632536-1_1_AC

Pos	Part No	UN	Qty	Description	Page No
-					
010	2632535-0000		1	CONNECTION BOX	
300	312605-0314		2	HEXAGON NUT, M6M M5 A280	
310	315105-0146		4	WASHER BRB 5,3X10 RFR	
320	312105-0327		2	SCREW M6S ISO 4017 M5X12 A480	
510	90458-0306		1	CABLE GLAND, M16X1,5, NO.5311 1010	
520	90458-0322		1	NUT, M16X1,5	
S7431	90111-0120		1	SWITCH, 2 POS.704.510 .0A+704.901.5/A	
W7402	351150-0403	MM	8000	CABLE OLFLEX 3X0,75 MM2 LIGHT/GREY	

Pos	Part No	UN	Qty	Description	Page No

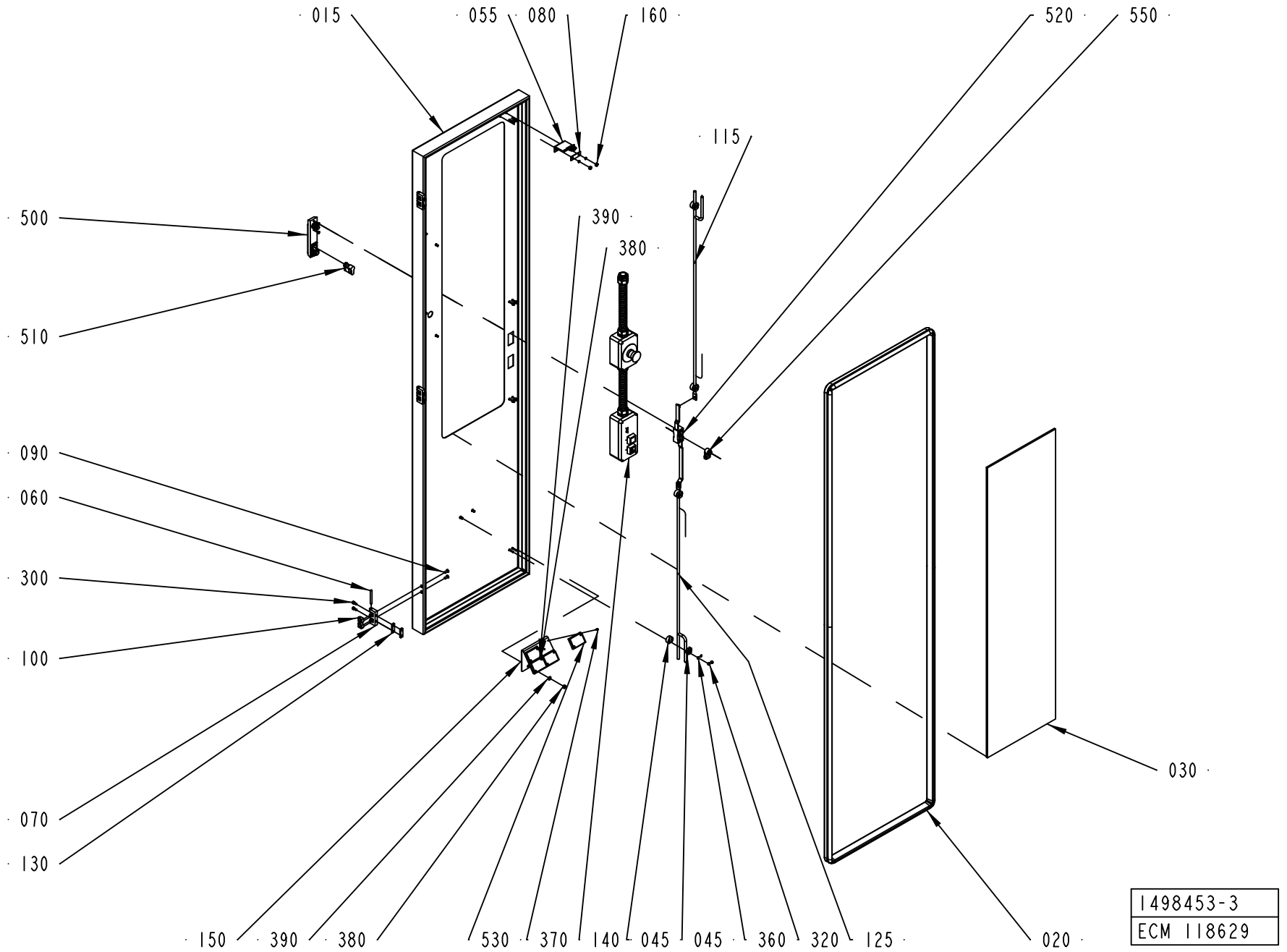
015
055
080
160
520
550
115
500
390
380
510
090
060
300
100
070
130
030
150
390
380
530
370
140
045
045
360
320
125
020
1498453-3
ECM 118629

ECM: 341209 - 20080215
Group number: 1498453-0200
Assembly Drawing: 1498453-3_1_AD

Pos	Part No	UN	Qty	Description	Page No
A3/FLEX					
015	2547666-0000		1	DOOR	
030	1498459-0001		1	GLASS PANE	
Common Parts					
020	1498461-0001		1	SEALING STRIP	
045	2550333-0000		4	GUIDE LUG	
055	2553072-0000		1	KEY FOR SAFETY SWITCH	
060	988685-0000		3	PIN	
070	1035792-0000		3	E-HINGE	
080	1036563-0000		1	WASHER	
090	1129767-0000		6	SCREW	
100	1129770-0000		6	BLOCKING PIECE	
115	2550269-0001		1	LOCKING ARM	
125	2550269-0002		1	LOCKING ARM	
130	1147253-0000		3	NUT	
140	1517088-0200		1	CONTROL PANEL	**8-305**
150	2541943-0000		1	BRACKET	
160	1539391-0000		2	ROUND NUT	
300	312115-0327		6	SCREW ISO4762 M5X12 A4 80	
320	312705-0312		8	NUT HEX. DOMED CAP MHM-6 M4 A280	
360	315105-0136		10	WASHER BRB 4,3X8 RFR	
370	312125-0222		8	SCREW ISO 1207 M3X8 A4	
380	312605-0316		2	HEXAGON NUT, M6M M6 A280	
390	315105-0153		2	WASHER BRB 6,4X12 RFR	
500	90237-0175		1	TURNING HANDLE, 1125-U185-0A	
510	90237-0128		1	LOCK CYLINDER, 1109-SU125	
520	90237-0153		1	LOCK HOUSING, 1121-U26-0B	
530	90232-0333		4	REFLECTOR E39-R1	
550	90237-0165		1	LATCH	

Pos	Part No	UN	Qty	Description	Page No

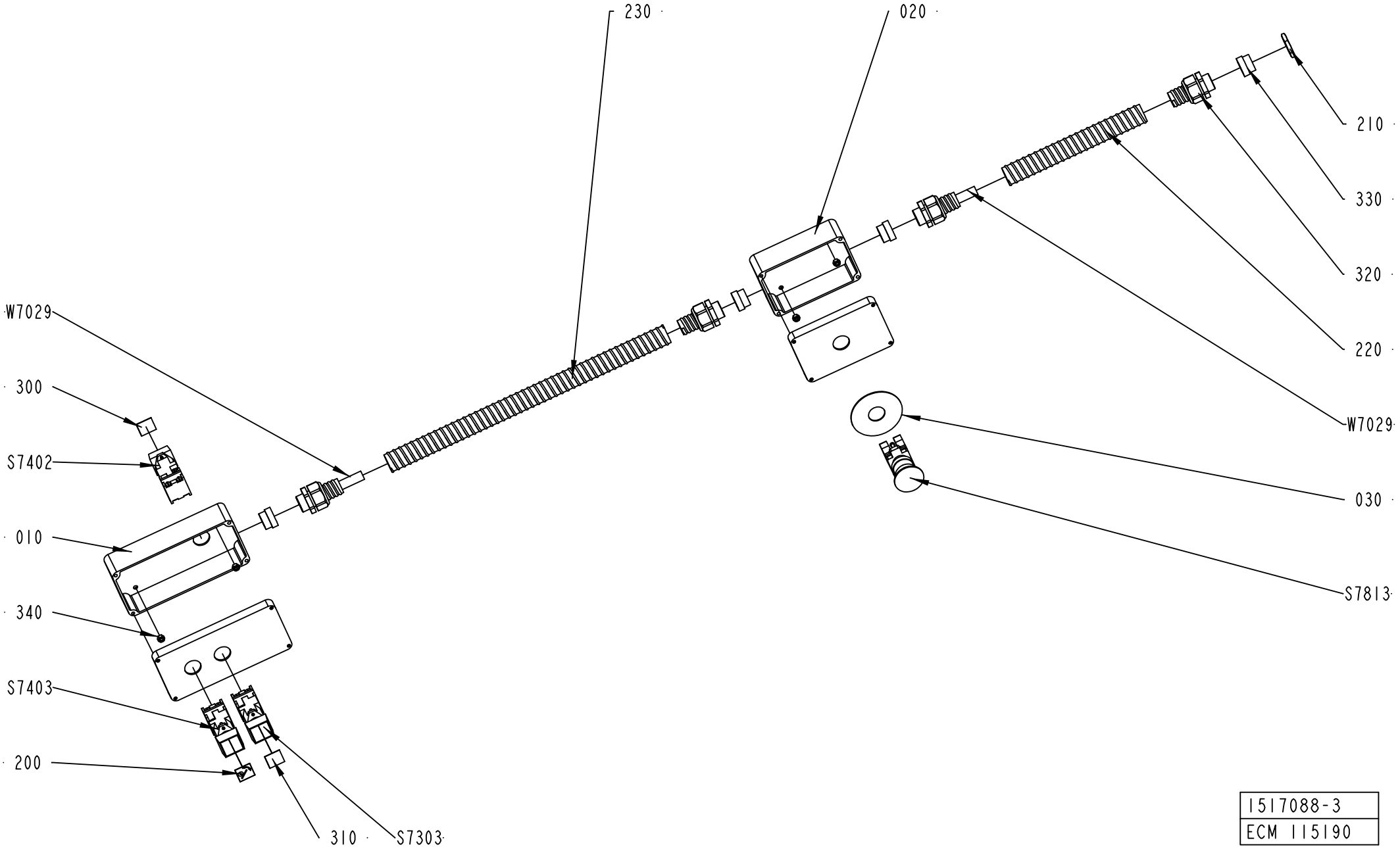

1517088-3
ECM 115190

ECM: 272277 - 20060712
Group number: 1517088-0200
Assembly Drawing: 1517088-3_1_AC

Pos	Part No	UN	Qty	Description	Page No
-					
010	2523482-0000		1	PUSH BUTTON BOX	
020	2523483-0000		1	PUSH BUTTON BOX	
030	486826-0001		1	SIGN "EMERGENCY STOP"	
200	90457-0920		1	BUTTON SIGN, ROTATION OF MATERIAL HOLDER	
210	90099-0110		1	NUT, PR 22,5 (PG16)	
220	90152-0051	MM	500	SPIRAL CONDUIT, 25X18, UL 1816	
230	90152-0051	MM	170	SPIRAL CONDUIT, 25X18, UL 1816	
300	359301-0100		1	BUTTON SIGN, SPLICING	
310	359301-0488		1	BUTTON SIGN, MATERIAL LOCKING	
320	353243-0005		4	HOSE GLAND W/O INSERT PG16 EXTENDED	
330	353249-0014		4	INSERT, SINGLE HOLE, EK 154/16	
340	312605-0314		4	HEXAGON NUT, M6M M5 A280	
S7303	90064-0082		1	PUSH BUTTON, WHITE	
	90036-0057		*1*	*LIGHT BULB, BA9S 28V*	
S7402	90064-0082		1	PUSH BUTTON, WHITE	
	90036-0057		*1*	*LIGHT BULB, BA9S 28V*	
S7403	90064-0082		1	PUSH BUTTON, WHITE	
	90036-0057		*1*	*LIGHT BULB, BA9S 28V*	
S7813	90458-1651		1	EMERGENCY STOP, ZB4-BS-844 ZB4-BZ-104	
W7029	351150-0407	MM	5000	CABLE OLFLEX 12X0,75 MM2 LIGHT/GREY	

Pos	Part No	UN	Qty	Description	Page No

Machine Type | Group Description | Used-In | Group Number | Page No

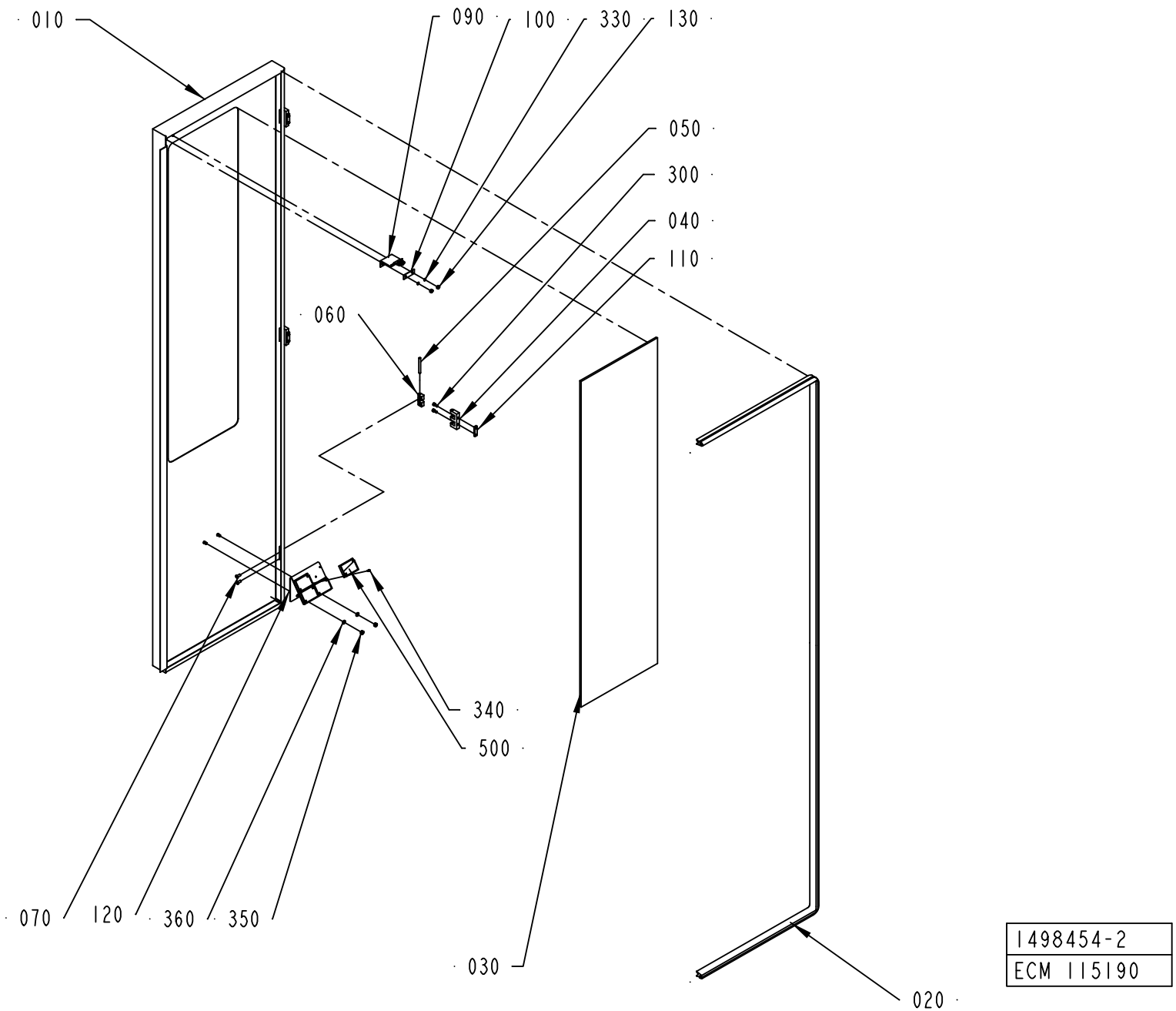

1498454-2
ECM 115190

ECM: 249413 - 20060303
Group number: 1498454-0200
Assembly Drawing: 1498454-2_1_AB

Pos	Part No	UN	Qty	Description	Page No
A3/FLEX					
010	2547667-0000		1	DOOR	
030	1498459-0001		1	GLASS PANE	
Common Parts					
020	1499579-0000		1	SEALING STRIP	
040	1035792-0000		3	E-HINGE	
050	988685-0000		3	PIN	
060	1129770-0000		6	BLOCKING PIECE	
070	1129767-0000		6	SCREW	
090	2553072-0000		1	KEY FOR SAFETY SWITCH	
100	1036563-0000		1	WASHER	
110	1147253-0000		3	NUT	
120	2541943-0000		1	BRACKET	
130	1539391-0000		2	ROUND NUT	
300	312115-0327		6	SCREW ISO4762 M5X12 A4 80	
330	315105-0136		2	WASHER BRB 4,3X8 RFR	
340	312125-0222		8	SCREW ISO 1207 M3X8 A4	
350	312605-0316		2	HEXAGON NUT, M6M M6 A280	
360	315105-0153		2	WASHER BRB 6,4X12 RFR	
500	90232-0333		4	REFLECTOR E39-R1	

Pos	Part No	UN	Qty	Description	Page No

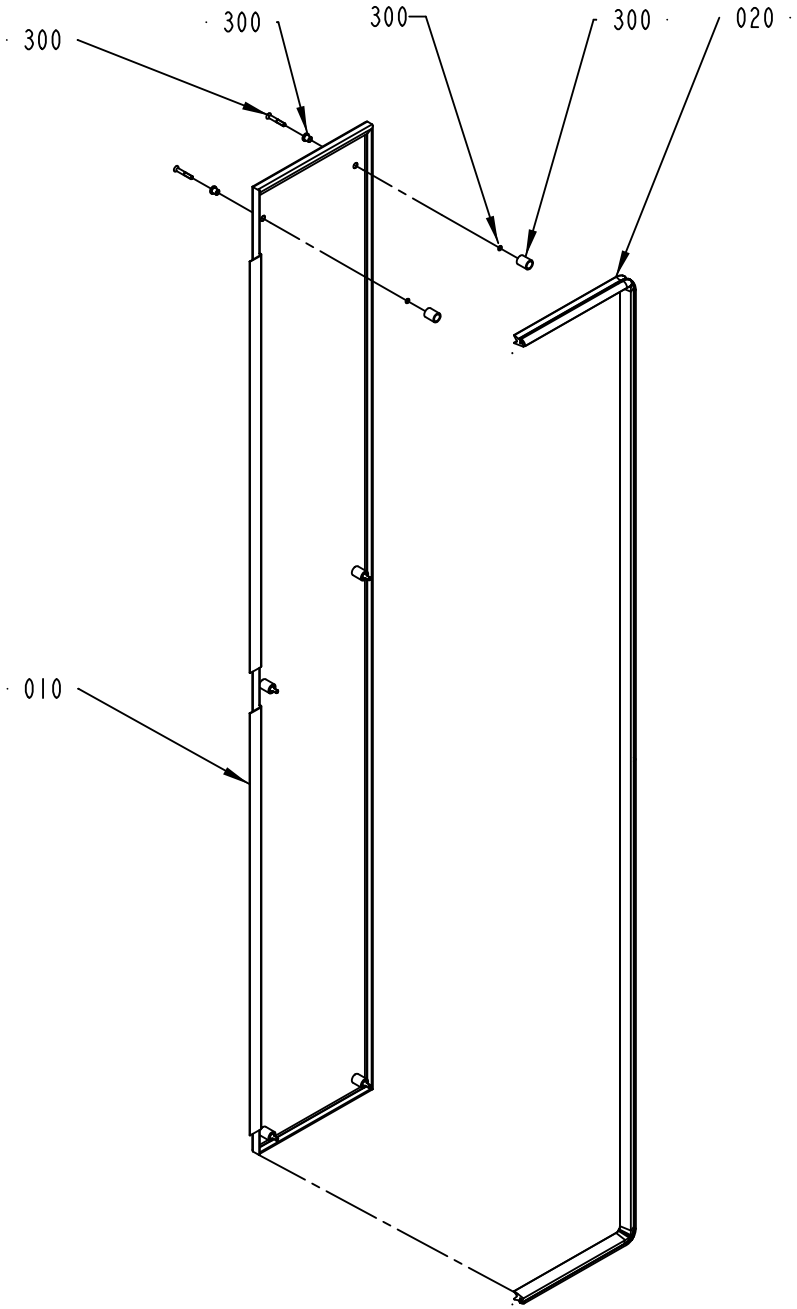

1490188-1
ECN 80701

ECM: 181163 - 20041005
Group number: 1490188-0100
Assembly Drawing: 1490188-1_1_AB

Pos	Part No	UN	Qty	Description	Page No
-					
010	1499568-0000		1	HATCH	
020	1512278-0000		1	SEALING STRIP	
300	90226-0458		6	MOUNTING SCREW	

Pos	Part No	UN	Qty	Description	Page No

Tetra Pak

SPC
Spare Parts Catalogue

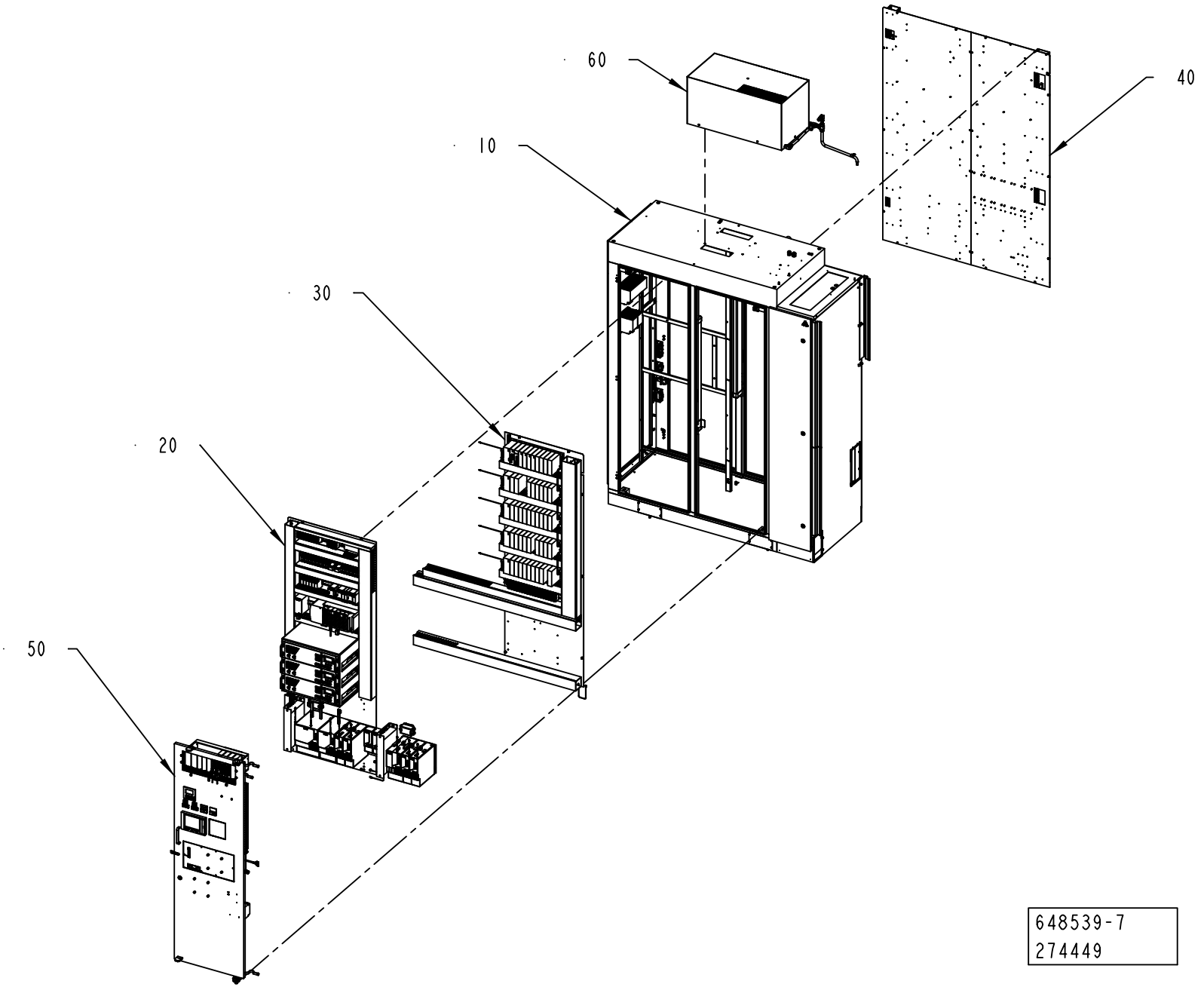
60
40
10
30
20
50
648539-7
274449

ECM: 306885 - 20070701
Group number: 648539-0250
Assembly Drawing: 648539-7_1_AA

This list covers pages from 9-2 to 9-5

Pos	Part No	UN	Qty	Description	Page No
A3/FLEX TBA, A3/FLEX TPA (See drawing on page: 9-2)					
070	2576334-0100		1	TPOP DATA COLLECTION	**9-7**
080	2576335-0100		1	TPOP LINE SUPERVISION	**9-9**
090	2565624-0350		1	SOFTWARE	**9-11**
A3/FLEX TGA (See drawing on page: 9-4)					
070	2576334-0100		1	TPOP DATA COLLECTION	**9-7**
080	2576335-0100		1	TPOP LINE SUPERVISION	**9-9**
090	2565624-0350		1	SOFTWARE	**9-11**
110	2841938-0100		1	ELECTRICAL CABINET	**9-19**
Common Parts					
	2635131-0150		1	CABLE SET	**9-47**
010	1532902-0250		1	CABINET	**9-49, 9-51**
020	1532908-0250		1	CONTROL BOARD LEFT	**9-77, 9-79, 9-81, 9-83, 9-85**
030	1548123-0150		1	CONTROL BOARD RIGHT	**9-97, 9-99**
040	1548127-0250		1	POWER SUPPLY UNIT	**9-103**
050	1548136-0150		1	DOOR	**9-149, 9-151, 9-153**
060	2550125-0100		1	COOLING UNIT	**9-173**

Pos	Part No	UN	Qty	Description	Page No

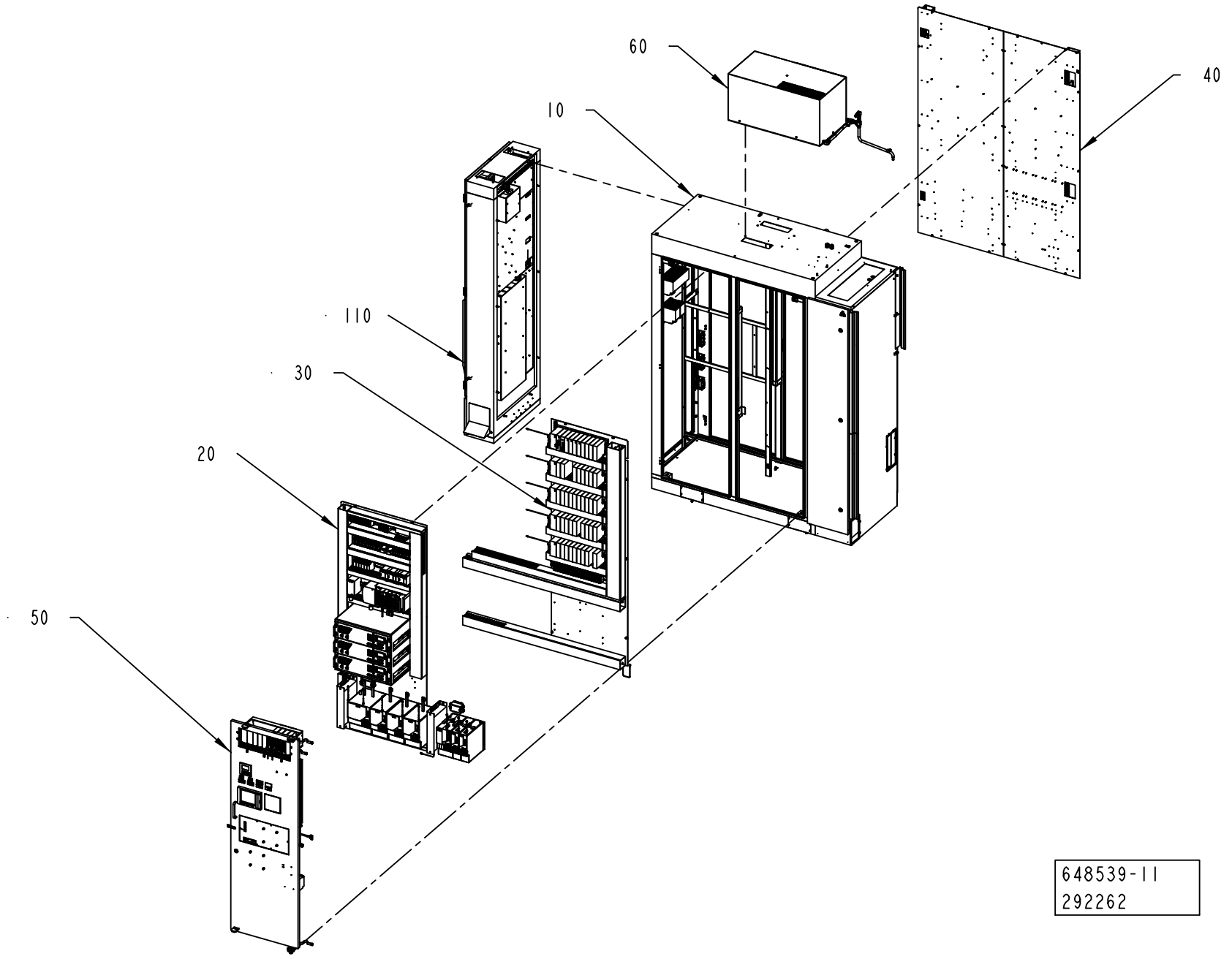
60
40
10
110
30
20
50
648539-11
292262

ECM: 306885 - 20070701
Group number: 648539-0250
Assembly Drawing: 648539-11_1_AA

This list covers pages from 9-2 to 9-5

Pos	Part No	UN	Qty	Description	Page No
A3/FLEX TBA, A3/FLEX TPA (See drawing on page: 9-2)					
070	2576334-0100		1	TPOP DATA COLLECTION	**9-7**
080	2576335-0100		1	TPOP LINE SUPERVISION	**9-9**
090	2565624-0350		1	SOFTWARE	**9-11**
A3/FLEX TGA (See drawing on page: 9-4)					
070	2576334-0100		1	TPOP DATA COLLECTION	**9-7**
080	2576335-0100		1	TPOP LINE SUPERVISION	**9-9**
090	2565624-0350		1	SOFTWARE	**9-11**
110	2841938-0100		1	ELECTRICAL CABINET	**9-19**
Common Parts					
	2635131-0150		1	CABLE SET	**9-47**
010	1532902-0250		1	CABINET	**9-49, 9-51**
020	1532908-0250		1	CONTROL BOARD LEFT	**9-77, 9-79, 9-81, 9-83, 9-85**
030	1548123-0150		1	CONTROL BOARD RIGHT	**9-97, 9-99**
040	1548127-0250		1	POWER SUPPLY UNIT	**9-103**
050	1548136-0150		1	DOOR	**9-149, 9-151, 9-153**
060	2550125-0100		1	COOLING UNIT	**9-173**

Pos	Part No	UN	Qty	Description	Page No

This page is intentionally left blank.

ECM: 315393 - 20080404
Group number: 2576334-0100
Assembly Drawing:

Pos	Part No	UN	Qty	Description	Page No
-					
010	90453-0001		1	MODEM MA-12	
020	90041-0068		1	DATACABLE MODEM PC	
030	90220-0091	M	200	PAIR TWISTED CABLE 2X2X0,25MM2	
040	1190007-0402		1	PLMS RECEIVE	
050	82197-0103		1	UM DOCUMENT SERIAL COMUNICATION ONLY EN	
060	47937-0411		1	PLMS OFF-LINE PROGRAM	
0020	*2710271-0000*		*1*	*DOCUMENTATION DISKETTE*	
0030	*2710272-0000*		*1*	*LABELS, DISKETTE*	
0040	*2710273-0000*		*1*	*LABELS, CD*	
0050	*2710274-0000*		*1*	*SHORT FORM INSTRUCTIONS*	
0060	*47937-1411*		*1*	*SOFTWARE PLMS OFF-LINE*	
0070	*47937-2411*		*1*	*SOFTWARE 47937-1411 (PART 1)*	
0080	*47937-3411*		*1*	*SOFTWARE 47937-1411 (PART 2)*	
070	82351-0106		1	USER MANUAL PLMS OFF-LINE	

Pos	Part No	UN	Qty	Description	Page No

This page is intentionally left blank.

ECM: 185550 - 20041104
Group number: 2576335-0100
Assembly Drawing:

Pos	Part No	UN	Qty	Description	Page No	Pos	Part No	UN	Qty	Description	Page No
-											
010	90220-0091	M	200	PAIR TWISTED CABLE 2X2X0,25MM2							
020	90110-0518		5	CONNECTOR D-SUB, SUBCON 15/M-SH							
030	90110-0383		5	CONTACT COVER 15 PIN, SUB-D SUBCON							

This page is intentionally left blank.

ECM: 389281 - 20090731
Group number: 2565624-0350
Assembly Drawing:

Pos	Part No	UN	Qty	Description	Page No
-					
0010	2633186-0200		1	SOFTWARE TPOP	**9-13**
0020	2633187-0200		1	SOFTWARE TMCC	
0030	2633188-0200		1	SOFTWARE PLC	
0040	2852310-0100		1	SOFTWARE PLC MOTION	
0050	2639498-0200		1	SOFTWARE RECORDER	**9-15**
0060	2801571-0200		1	SOFTWARE TPIH	**9-17**

Pos	Part No	UN	Qty	Description	Page No

This page is intentionally left blank.

ECM: 387222 - 20090731
Group number: 2633186-0200
Assembly Drawing:

Pos	Part No	UN	Qty	Description	Page No
-					
0010	2930001-0003		1	TPOP CD	
0020	2846042-0001		1	TPOP BASIC VERSION 2.0	
0030	2846043-0001		1	TPOP BASIC WINDOWS OEM W2000 PROGRAM	

Pos	Part No	UN	Qty	Description	Page No

This page is intentionally left blank.

ECM: 411373 - 20090731
Group number: 2639498-0200
Assembly Drawing:

Pos	Part No	UN	Qty	Description	Page No
A3/FLEX USA					
0020	2699092-0001		1	RECORDER	
0030	2699090-0001		1	RECORDER	
0040	2701169-0002		1	RECORDER	
HI					
0010	2811834-0002		1	RECORDER CD	
0030	2699090-0001		1	RECORDER	
NOHI					
0010	2811834-0002		1	RECORDER CD	
0020	2699092-0001		1	RECORDER	

Pos	Part No	UN	Qty	Description	Page No

This page is intentionally left blank.

ECM: 389276 - 20090701
Group number: 2801571-0200
Assembly Drawing:

Pos	Part No	UN	Qty	Description	Page No
-					
0010	3018842-0001		1	TPIH CD	

Pos	Part No	UN	Qty	Description	Page No

Machine Type | Group Description | Used-In | Group Number | Page No

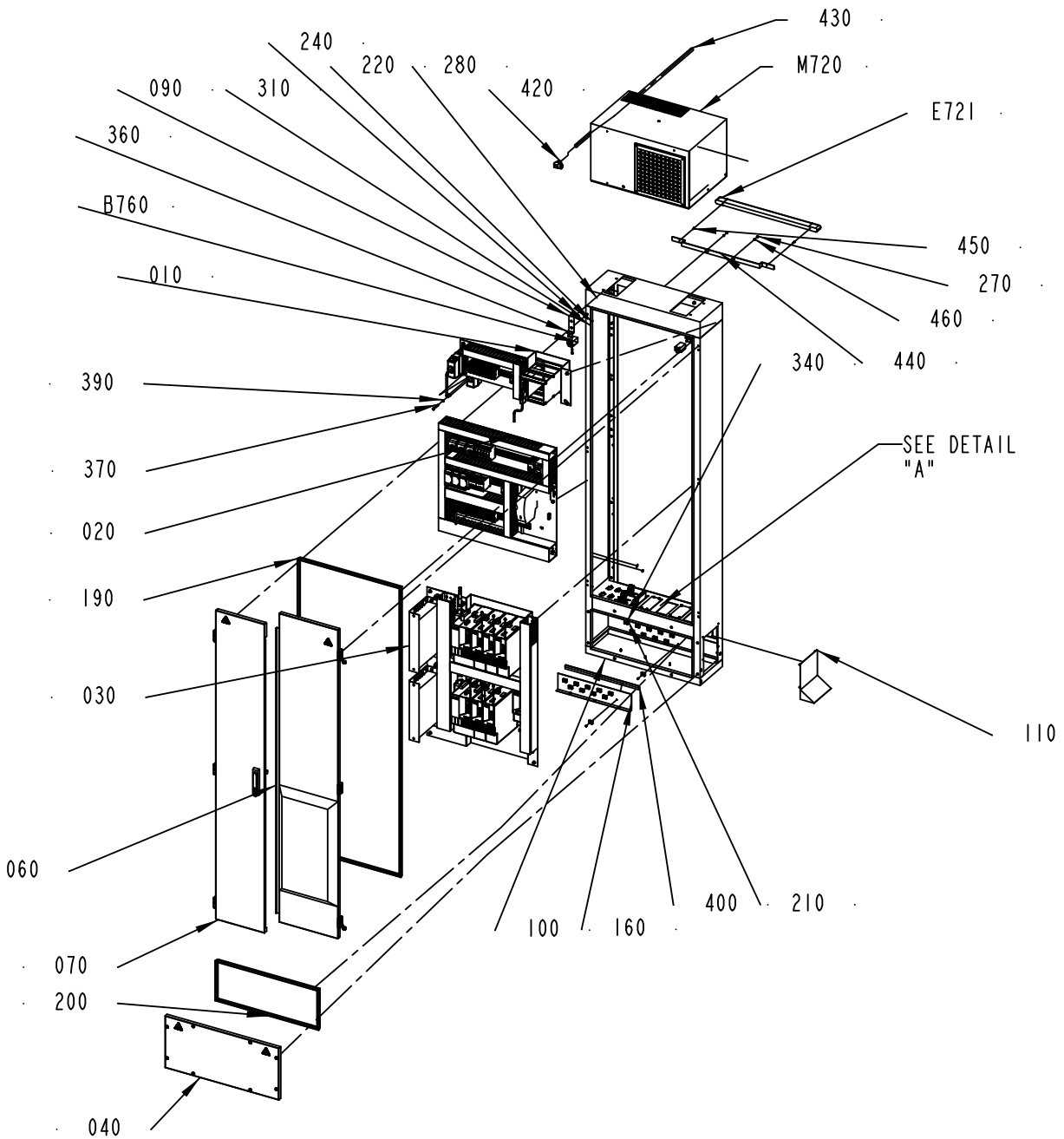

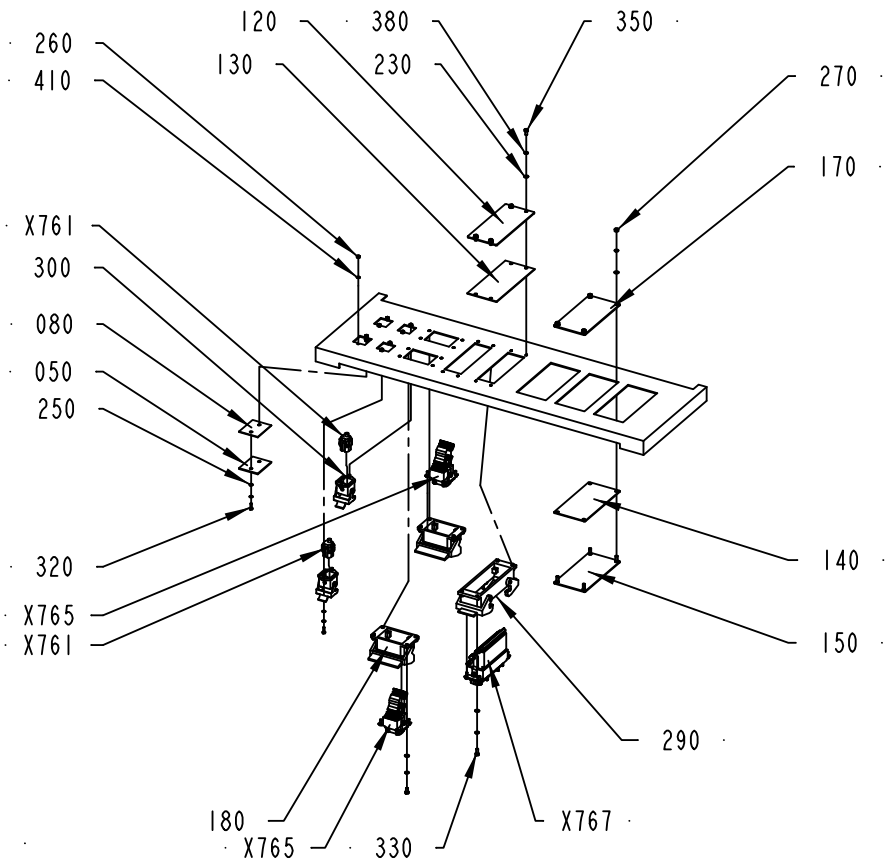

DETAIL "A"

2841938-1
345520

ECM: 345534 - 20080701
Group number: 2841938-0100
Assembly Drawing: 2841938-1_1_AB

Pos	Part No	UN	Qty	Description	Page No
-					
010	2841940-0100		1	BOX	**9-21**
020	2841941-0100		1	CONTROL PANEL	**9-27**
030	2841934-0100		1	RACK	**9-35**
040	2841933-0100		1	COVER	**9-41**
050	1487430-0000		2	COVER	
060	2841931-0100		1	DOOR	**9-43**
070	2841932-0100		1	DOOR	**9-45**
080	1487431-0000		2	GASKET	
090	2608106-0000		2	BRACKET	
100	2841926-0000		1	CABINET	
110	2841928-0000		1	COVER	
120	1037574-0000		1	COVER PLATE	
130	1037575-0000		1	GASKET	
140	2868066-0000		1	GASKET	
150	2868065-0000		1	PLATE	
160	2868063-0000		1	PLATE	
170	2868064-0000		1	PLATE	
180	90110-0123		2	HOUSING, 09 30 006 0301	
190	90143-0057	M	5	STRIP EMKA 1011-05 21X11MM	
200	90143-0057	M	2	STRIP EMKA 1011-05 21X11MM	
210	352113-0203		20	ANCHOR PLATES FOR STRIPS, TYPE TM3S8-M0	
220	90194-0152		4	SIGN, EARTH	
230	315105-0136		31	WASHER BRB 4,3X8 RFR	
240	315105-0153		14	WASHER BRB 6,4X12 RFR	
250	315402-0128		8	LOCK WASHER FBB 3,6	
260	312605-0310		8	HEXAGON NUT, M6M M3 A280	
270	312605-0312		11	HEXAGON NUT, M6M M4 A280	
280	312605-0316		4	HEXAGON NUT, M6M M6 A280	
290	90459-6639		1	HOUSING 24B BULKHEAD, 09 30 024 0301	
300	90459-6822		2	HOUSING 3A BULKHEAD, 09 20 003 0301	
310	2608177-0000		4	SIGN	
320	312125-0224		8	SCREW ISO 1207 M3X10 A4	
330	312125-0289		4	SCREW ISO 1207 M4X10 A4	
340	312125-0285		20	SCREW ISO 1207 M4X6 A4	
350	312125-0287		12	SCREW ISO 1207 M4X8 A4	
360	312115-0297		4	SCREW ISO4762 M4X25 A4 80	
370	312115-0379		10	SCREW ISO4762 M6X45 A4 80	
380	315402-0136		23	LOCK WASHER FBB 4,1	
390	315402-0156		10	LOCK WASHER FBB 6,5	
400	90143-0057	M	1	STRIP EMKA 1011-05 21X11MM	
410	315105-0124		18	WASHER BRB 3,2X6 RFR	
420	90459-2553		1	ELBOW PIPE JOINT 16 MM	
430	2876488-0000		1	PIPE	
440	2951166-0000		1	SUPPORT	
450	312115-0226		2	SCREW ISO4762 M3X12 A4 80	
460	315103-0136		2	WASHER PLAIN, BRB, 4,3/8,H=0,8 NI PL BR	
B760	90044-0192		1	LIMIT SW. SZ2586.000	
B770	90044-0192		1	LIMIT SW. SZ2586.000	
E721	90600-4048		1	LIGHT FIXTURE, TCH128 1XTL5-14W/830 HF	
	90600-4238		*1*	*FLUORESC. TUBE,MASTER TL5 HE 14W/830 SLV*	
M720	90600-2253		1	COOLING UNIT, KT17.02.CA 0193	
	90600-2259		*1*	*FILTER, DISA 2557AA*	
	90600-2258		*1*	*GASKET, DISA 7526AA*	
	90600-2256		*1*	*FAN, VBA0001492*	
	90600-2255		*1*	*FAN, R2E220-AA52-46*	
	90600-0673		*1*	*THERMOSTAT, KELVIN TMI0000218*	
X761	90110-0296		1	FEMALE INSERT HDC-HA-4BS 149840-B/2	
X762	90110-0296		1	FEMALE INSERT HDC-HA-4BS 149840-B/2	
X765	90459-6629		1	HOOD 10 B SIDE ENTRY, 19 30 010 1520	
X765	90459-6624		1	FEMALE INSERT HAN E AV, 09 33 006 4735	
X766	90459-6624		1	FEMALE INSERT HAN E AV, 09 33 006 4735	
X767	90459-6624		1	FEMALE INSERT HAN E AV, 09 33 006 4735	
X767	90459-6627		1	FEMALE INSERT HAN E AV, 09 33 024 4735	

Machine Type	Group Description	Used-In	Group Number	Page No

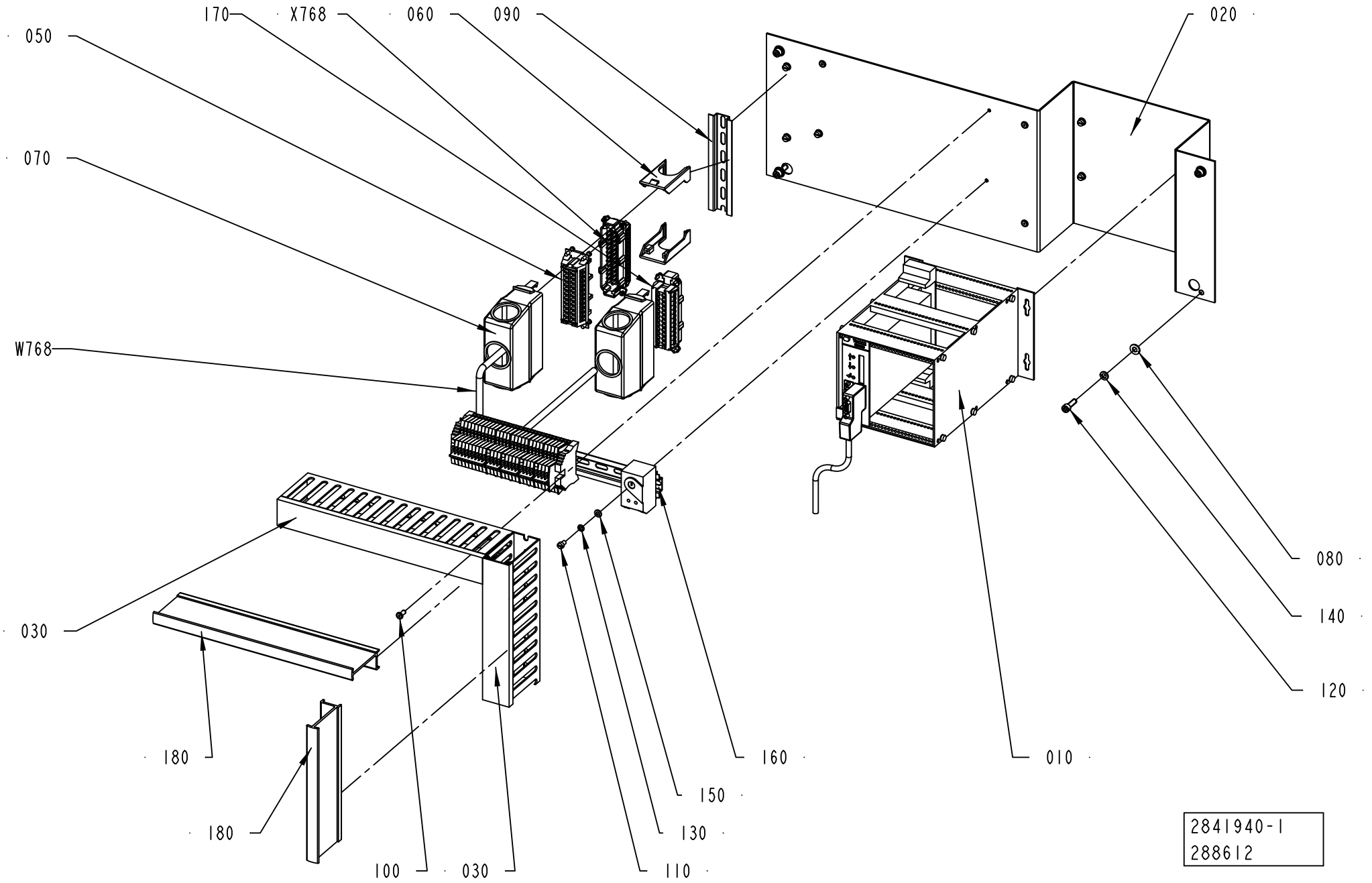
170
X768
060
090
020
050
070
W768
080
140
120
030
180
180
100
030
110
130
150
160
010
2841940-1
288612

ECM: 393214 - 20090701
Group number: 2841940-0100
Assembly Drawing: 2841940-1_1_AA

Pos	Part No	UN	Qty	Description	Page No
-					
010	2861067-0100		1	DISTRIBUTION TERMINAL	**9-23**
020	2841939-0000		1	FRAME	
030	90181-0053	MM	600	CABLE DUCT 40X80MM	
040	559810-0101		1	TMCC2 CONTROLLER	
050	90110-0057		1	FEMALE INSERT HAN 24 E 09 33 002 4201	
060	90459-6859		1	HOUS.SIZE 6-24B HAN-SNAP, 09 33 000 9980	
070	90459-6903		2	HOOD SIZE 24B HAN-SNAP, 09 33 024 0401	
080	315105-0156		4	WASHER BRB 6,7X14 RFR	
090	353042-0005	M	1	RAIL TS 35/7.5	
100	90181-0313		4	RIVET DUCTAFIX R4	
110	312125-0323		8	SCREW ISO 1207 M5X8 A4	
120	312115-0370		4	SCREW ISO4762 M6X20 A4 80	
130	315402-0146		8	LOCK WASHER FBB 5,1	
140	315402-0156		4	LOCK WASHER FBB 6,5	
150	315105-0146		8	WASHER BRB 5,3X10 RFR	
160	2861068-0100		1	DISTRIBUTION TERMINAL	**9-25**
170	90110-0056		1	MALE INSERT HAN 24 E 09 33 024 2601	
180	90181-0067	MM	505	DIVIDING PLATE SEP80	
W768	351150-0425	MM	1900	CABLE OLFLEX 25X0,75 MM2 LIGHT/GREY	
X768	90110-0056		1	MALE INSERT HAN 24 E 09 33 024 2601	

Pos	Part No	UN	Qty	Description	Page No

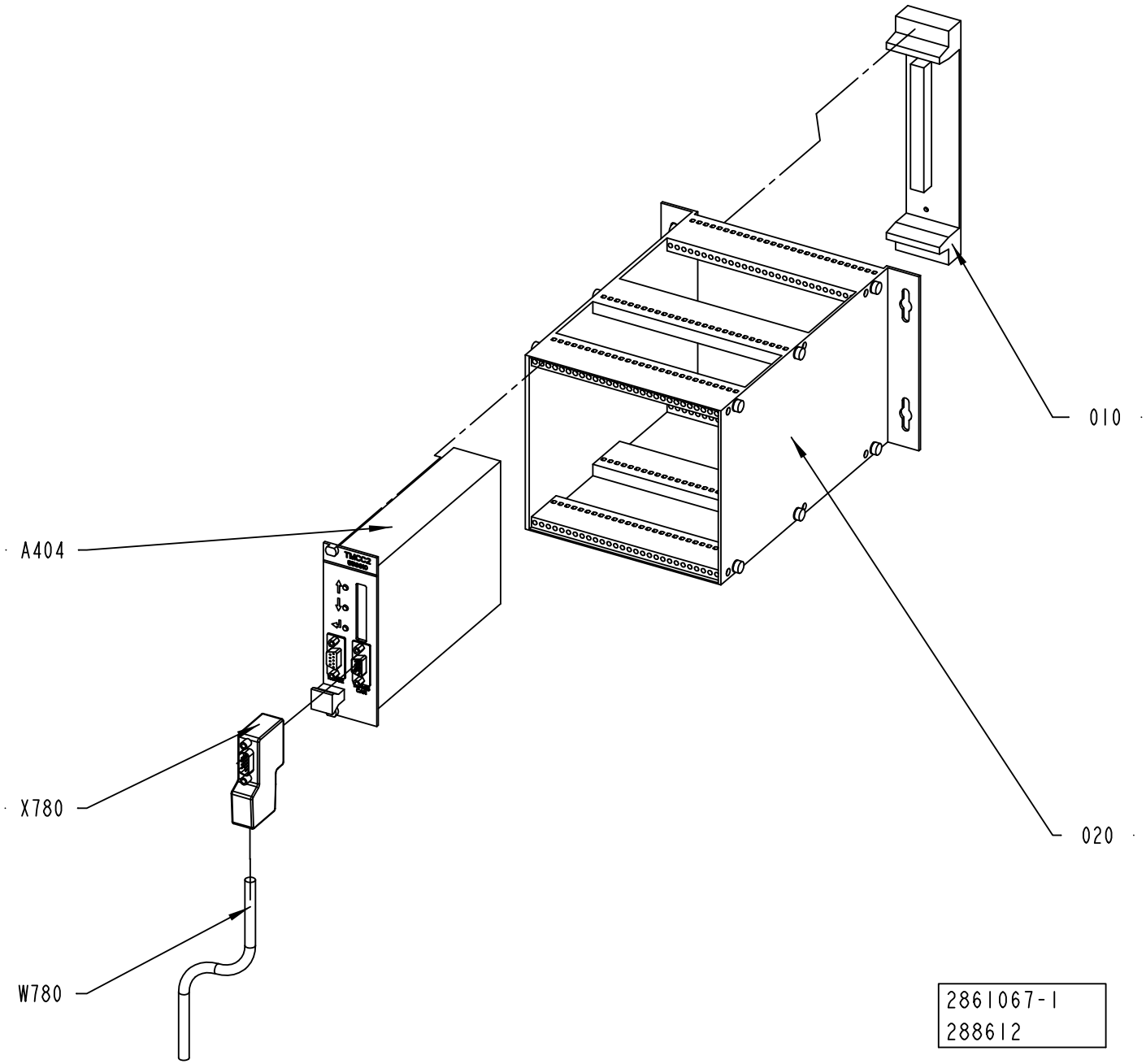
A404
X780
W780
010
020
2861067-1
288612

ECM: 315411 - 20080215
Group number: 2861067-0100
Assembly Drawing: 2861067-1_1_AA

Pos	Part No	UN	Qty	Description	Page No
-					
010	67372-0101		1	BACKPLANE 8TE(32 POLE)	
0010	*543336-0001*		*1*	*COMPONENTS WITHOUT TP-NO*	
0020	*543319-0000*		*1*	*PRINTED CIRCUIT BOARD*	
0030	*543337-0000*		*1*	*TERMINAL LABELS 1-4*	
020	67369-0103		1	RACK WALLMOUNTED 28TE	
020	*540281-0001*		*1*	*DETAIL DRAWING*	
030 3	*540282-0003*		*1*	*COMPONENTS WITHOUT TP-NO*	
A404	559810-0101		1	TMCC2 CONTROLLER	
W780	90459-2530	MM	1700	DEVICENET CABLE THIN	
X780	90459-0182		1	INTERFACE CONNECTOR FOR TMCC2	

Pos	Part No	UN	Qty	Description	Page No

DISTRIBUTION TERMINAL

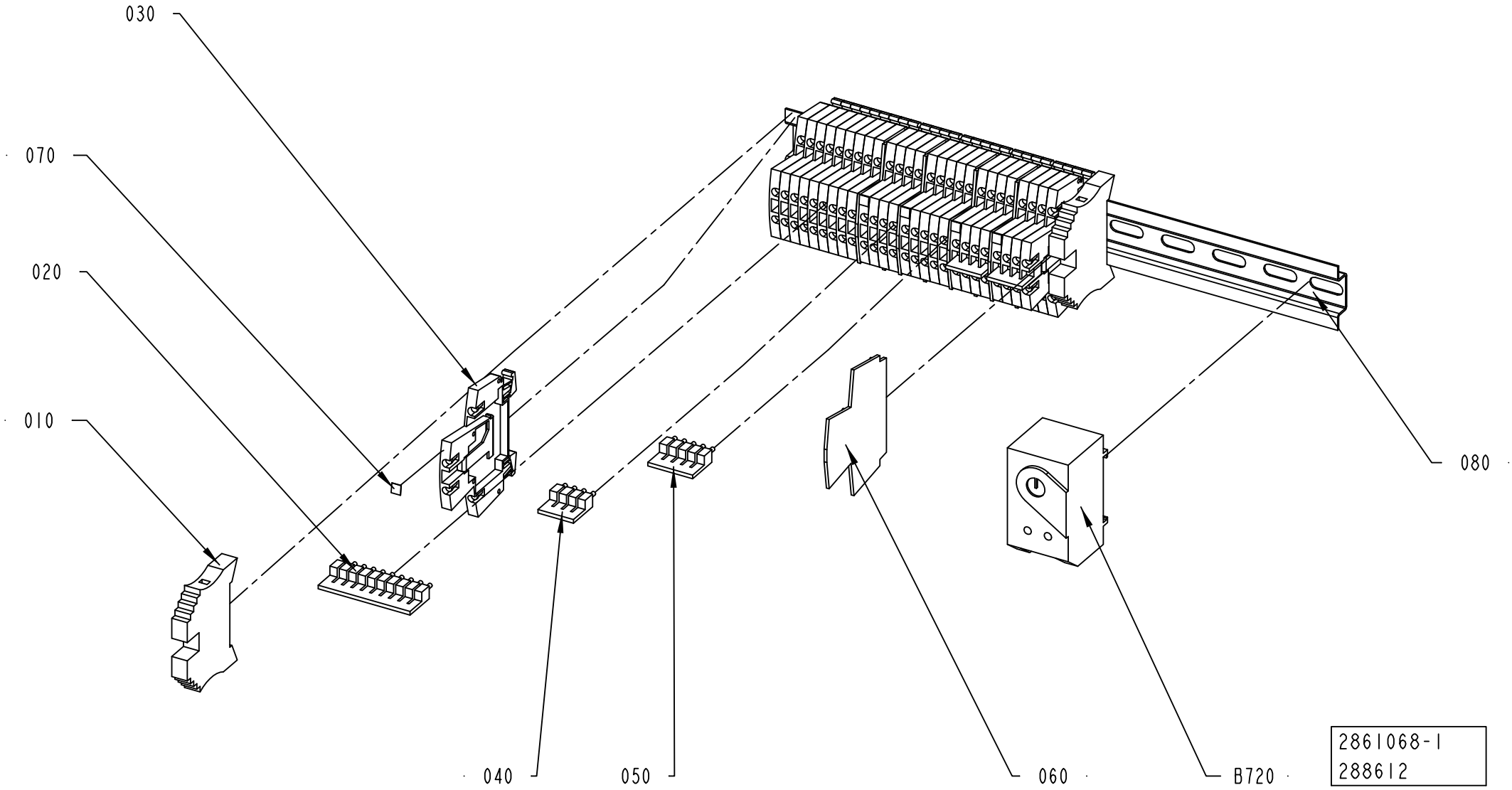

ECM: 315412 - 20080215
Group number: 2861068-0100
Assembly Drawing: 2861068-1_1_AA

Pos	Part No	UN	Qty	Description	Page No
-					
010	353031-0203		2	END SUPPORT, WEW 35/2	
020	353034-0030		1	BRIDGE CONNECTOR WQV 2,5/10, 10544.6	
030	90457-0049		27	TERMINAL BLOCK WDK 2.5V, 102230	
040	353034-0030		3	BRIDGE CONNECTOR WQV 2,5/10, 10544.6	
050	353034-0030		1	BRIDGE CONNECTOR WQV 2,5/10, 10544.6	
060	353032-0009		5	END PLATE, WAP FOR WDK	
070	359011-0809		5	MARKING PLATES 5-FW 101-150	
080	353042-0005	MM	300	RAIL TS 35/7.5	
B720	90458-1114		1	BIMET. ELECTROMECH. THERMOSTAT K7H.020	

Pos	Part No	UN	Qty	Description	Page No

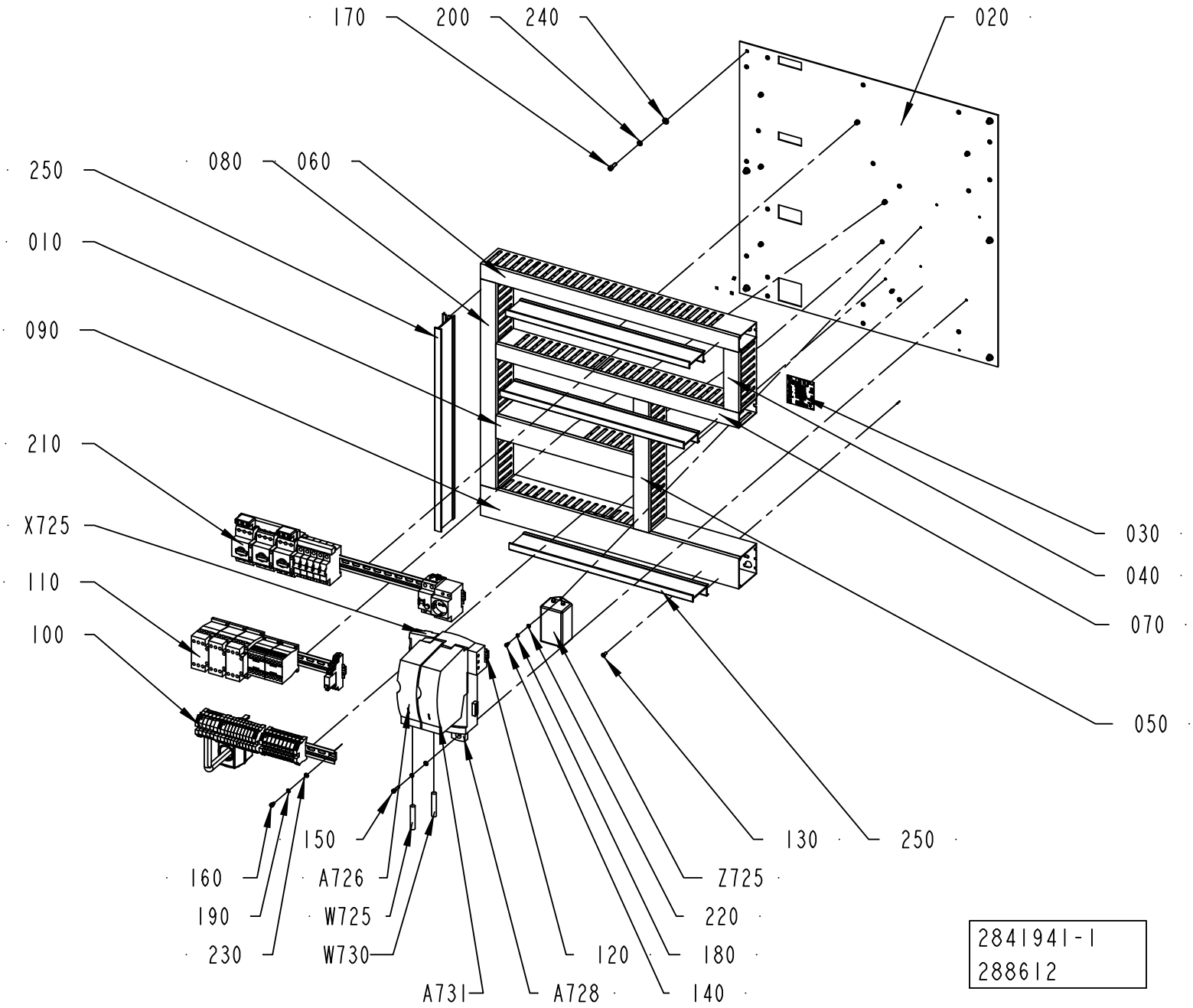
170
200
240
020
250
080
060
010
090
210
X725
110
100
030
040
070
050
150
160
190
230
A726
W725
W730
A731
A728
120
130
250
Z725
220
180
140
2841941-1
288612

ECM: 315410 - 20080101
Group number: 2841941-0100
Assembly Drawing: 2841941-1_1_AA

Pos	Part No	UN	Qty	Description	Page No
-					
010	2868060-0000		1	CABLE DUCT	
020	2861062-0000		1	PANEL	
030	90458-1856		1	ADHESIVE LABEL, CONNECTION DIAGRAM	
040	90181-0053	MM	500	CABLE DUCT 40X80MM	
050	90181-0053	MM	345	CABLE DUCT 40X80MM	
060	2861101-0000		1	CABLE DUCT	
070	2868058-0000		1	CABLE DUCT	
080	2868059-0000		1	CABLE DUCT	
090	2868062-0000		1	CABLE DUCT	
100	2861070-0100		1	DISTRIBUTION TERMINAL	**9-29**
110	2861071-0100		1	DISTRIBUTION TERMINAL	**9-31**
120	353042-0005	MM	200	RAIL TS 35/7.5	
130	90181-0313		21	RIVET DUCTAFIX R4	
140	312115-0287		2	SCREW ISO4762 M4X8 A4 80	
150	312115-0331		1	SCREW ISO4762 M5X20 A4 80	
160	312115-0323		9	SCREW ISO4762 M5X8 A4 80	
170	312115-0370		6	SCREW ISO4762 M6X20 A4 80	
180	315402-0136		2	LOCK WASHER FBB 4,1	
190	315402-0146		10	LOCK WASHER FBB 5,1	
200	315402-0156		6	LOCK WASHER FBB 6,5	
210	2861069-0100		1	DISTRIBUTION TERMINAL	**9-33**
220	315105-0136		2	WASHER BRB 4,3X8 RFR	
230	315105-0146		10	WASHER BRB 5,3X10 RFR	
240	315105-0156		6	WASHER BRB 6,7X14 RFR	
250	90181-0067	M	2	DIVIDING PLATE SEP80	
A726	90458-0522		1	STEP MOTOR DRIVE L25	
A728	90458-1300		1	2 AXIS DOCKING STATION D2/PLC	
	90458-1856		*1*	*ADHESIVE LABEL, CONNECTION DIAGRAM*	
W725	90220-0107	M	1.8	SCR. CABLE 5X0,75MM2	
X725	90458-1279		1	PLUG CONNECTOR DP1	
Z725	90459-3698		1	FILTER, 6 A, 250 VAC, FN2070M-6/06	

Pos	Part No	UN	Qty	Description	Page No

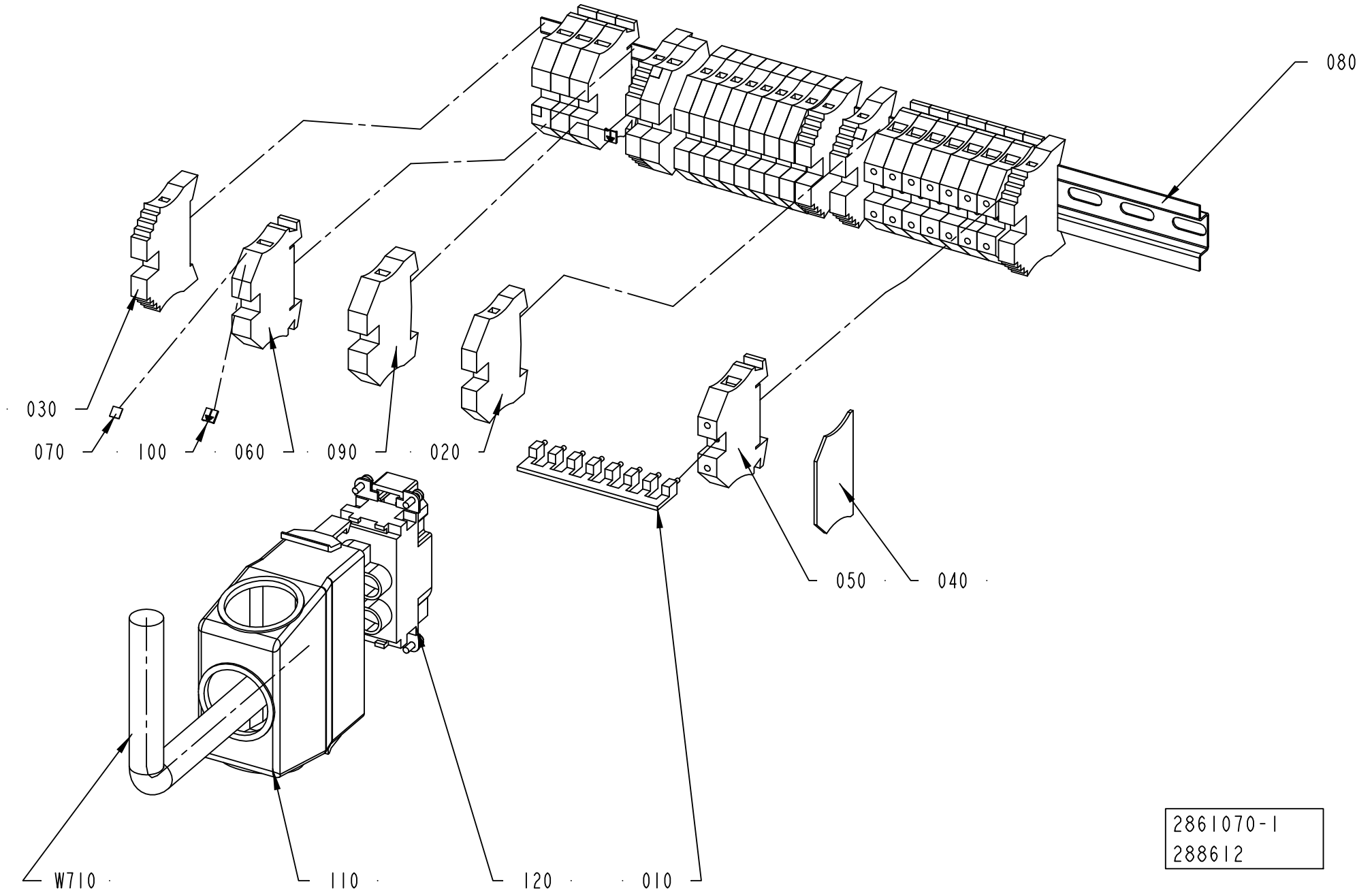
080
030
070
100
060
090
020
050
040
W710
110
120
010
2861070-1
288612

ECM: 315414 - 20080404
Group number: 2861070-0100
Assembly Drawing: 2861070-1_1_AA

Pos	Part No	UN	Qty	Description	Page No
-					
010	353034-0030		1	BRIDGE CONNECTOR WQV 2,5/10, 10544.6	
020	353024-0206		9	EARTH TERMINAL, 1010.2	
030	353031-0203		5	END SUPPORT, WEW 35/2	
040	353032-0004		1	END PLATE WAP 2,5-10 BEIGE	
050	90459-3068		8	NEUTRAL TERMINAL, 10203.8	
060	353021-0215		4	FEED THROUGH TERMINAL, 10203.0	
070	359011-0807		4	MARKING PLATES 5-FW 1-50	
080	353042-0005	MM	350	RAIL TS 35/7.5	
090	353024-0207		2	EARTH TERMINAL, 1010.3	
100	359011-0834		2	SET OF SIGNS 6-GW(EARTH)	
110	90459-6904		1	HOOD SIZE 16B HAN-SNAP, 09 33 016 0401	
120	90459-1451		1	MALE INSERT HAN K 09 38 006 2611	
W710	351150-0432	M	1.6	CABLE OLFLEX 5X10 MM2 LIGHT/GREY	

Pos	Part No	UN	Qty	Description	Page No

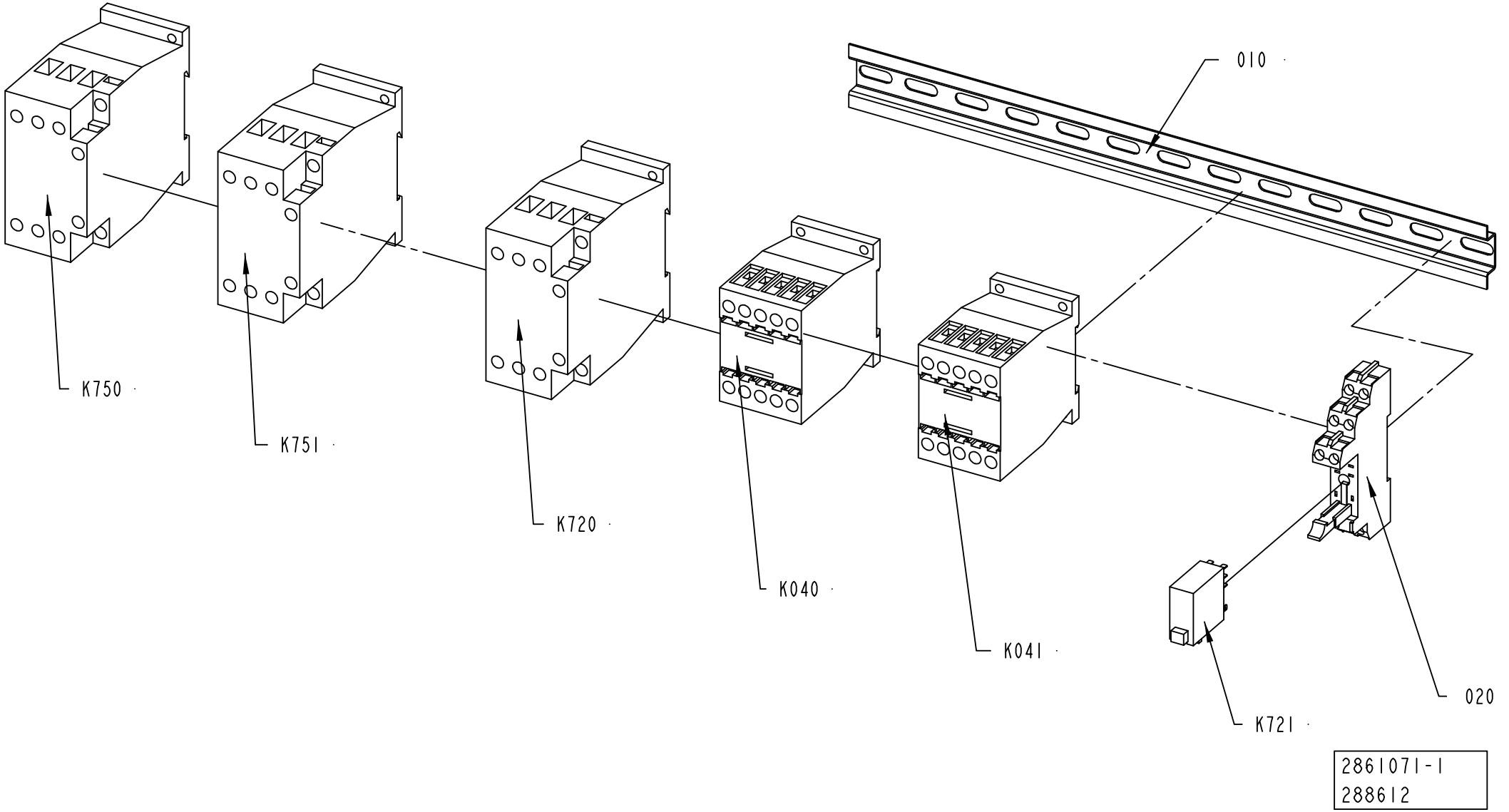
010
K750
K751
K720
K040
K041
K721
020
2861071-1
288612

ECM: 315415 - 20080404
Group number: 2861071-0100
Assembly Drawing: 2861071-1_1_AA

Pos	Part No	UN	Qty	Description	Page No
-					
010	353042-0005	M	1	RAIL TS 35/7.5	
020	90129-0018		1	BASE, P2RF-08-E	
K040	90459-5440		1	CONTACTOR 4KW 24VDC, DILM9-01	
K041	90459-5440		1	CONTACTOR 4KW 24VDC, DILM9-01	
K720	90459-5441		1	CONTACTOR 7,5KW 24VDC, DILM17-01	
K721	90119-0108		1	RELAY OMRON G2R-2-SNI-24DC	
	90129-0018		*1*	*BASE, P2RF-08-E*	
K750	90459-5444		1	CONTACTOR 15KW 24VDC, DILM32-01	
K751	90459-5444		1	CONTACTOR 15KW 24VDC, DILM32-01	

Pos	Part No	UN	Qty	Description	Page No

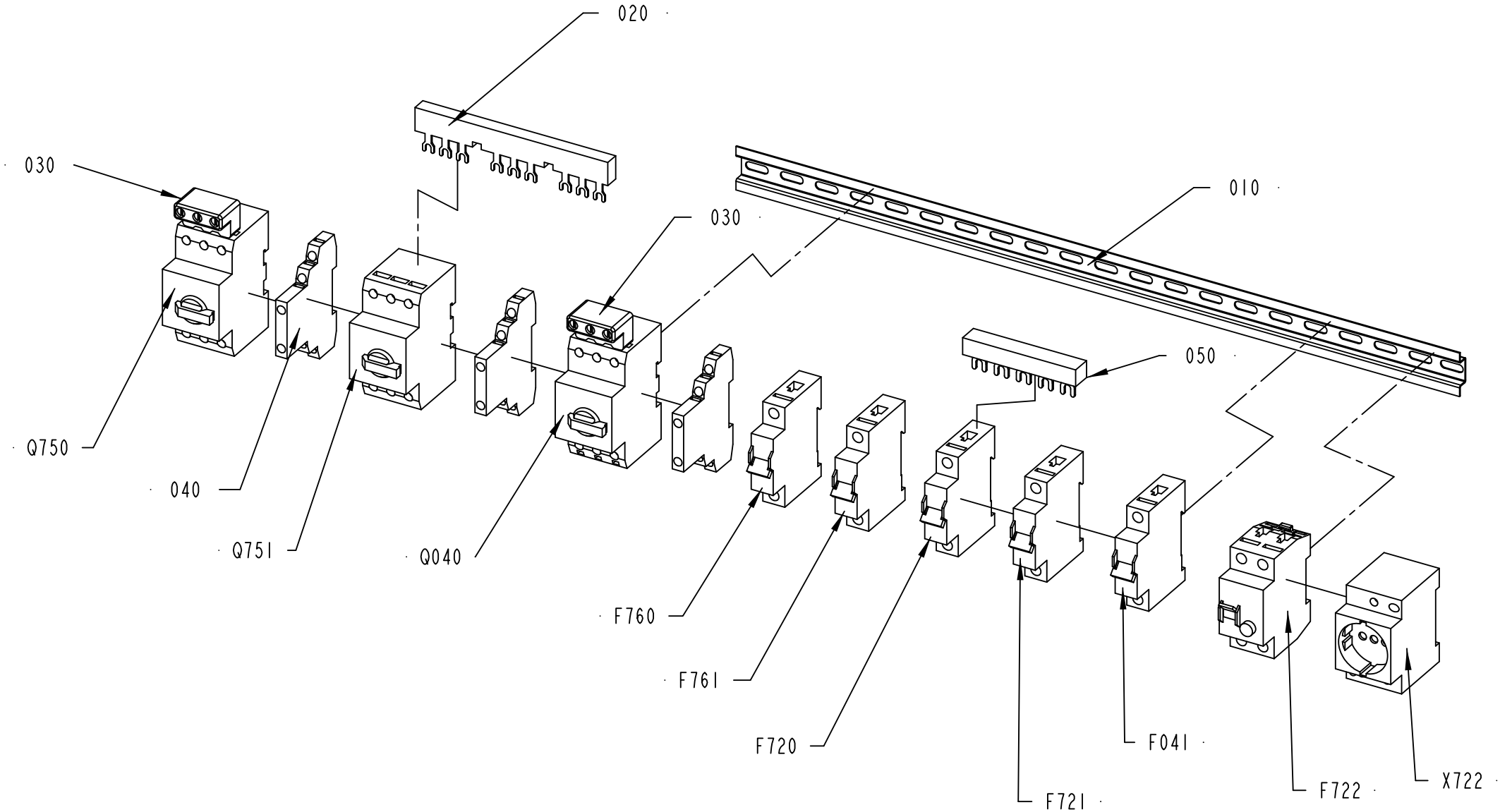
020
030
030
010
050
Q750
040
Q751
Q040
F760
F761
F720
F721
F041
F722
X722
2861069-1
389340

ECM: 393194 - 20090701
Group number: 2861069-0100
Assembly Drawing: 2861069-1_1_AB

Pos	Part No	UN	Qty	Description	Page No
-					
010	353042-0005	M	1	RAIL TS 35/7.5	
020	90259-0314		1	BUSBAR 3-POLE B3.1/3-PKZ0, 044946	
030	90259-0308		2	INCOMING TERMINAL 032720 BK25/3-PKZ0	
040	90259-0313		3	AUXILIARY CONTACT 072894 NHI21-PKZM0	
050	90459-5884	MM	100	COMMONING BUSBAR, 3-P 3-PH 3X19 MOD 63A	
F041	354000-0100		1	MINIATURE CIRCUIT BREAKER, FAZ-C10/1	
F720	354000-0100		1	MINIATURE CIRCUIT BREAKER, FAZ-C10/1	
F721	354000-0100		1	MINIATURE CIRCUIT BREAKER, FAZ-C10/1	
F722	90459-5811		1	RESIDUAL CURRENT DEVICE, FI-25/2/003-A	
F760	351416-0160		1	MINIATURE CIRC. BREAK., FAZ -D16 1-POLE	
F761	351416-0160		1	MINIATURE CIRC. BREAK., FAZ -D16 1-POLE	
Q040	90459-5324		1	OVERLOAD PROTECTION, PKZM0-1,6	
Q750	90459-5333		2	OVERLOAD PROTECTION, PKZM0-32	
Q751	90459-5333		1	OVERLOAD PROTECTION, PKZM0-32	
X722	90459-3845		1	POWER SOCKET, Z-SD230	

Pos	Part No	UN	Qty	Description	Page No

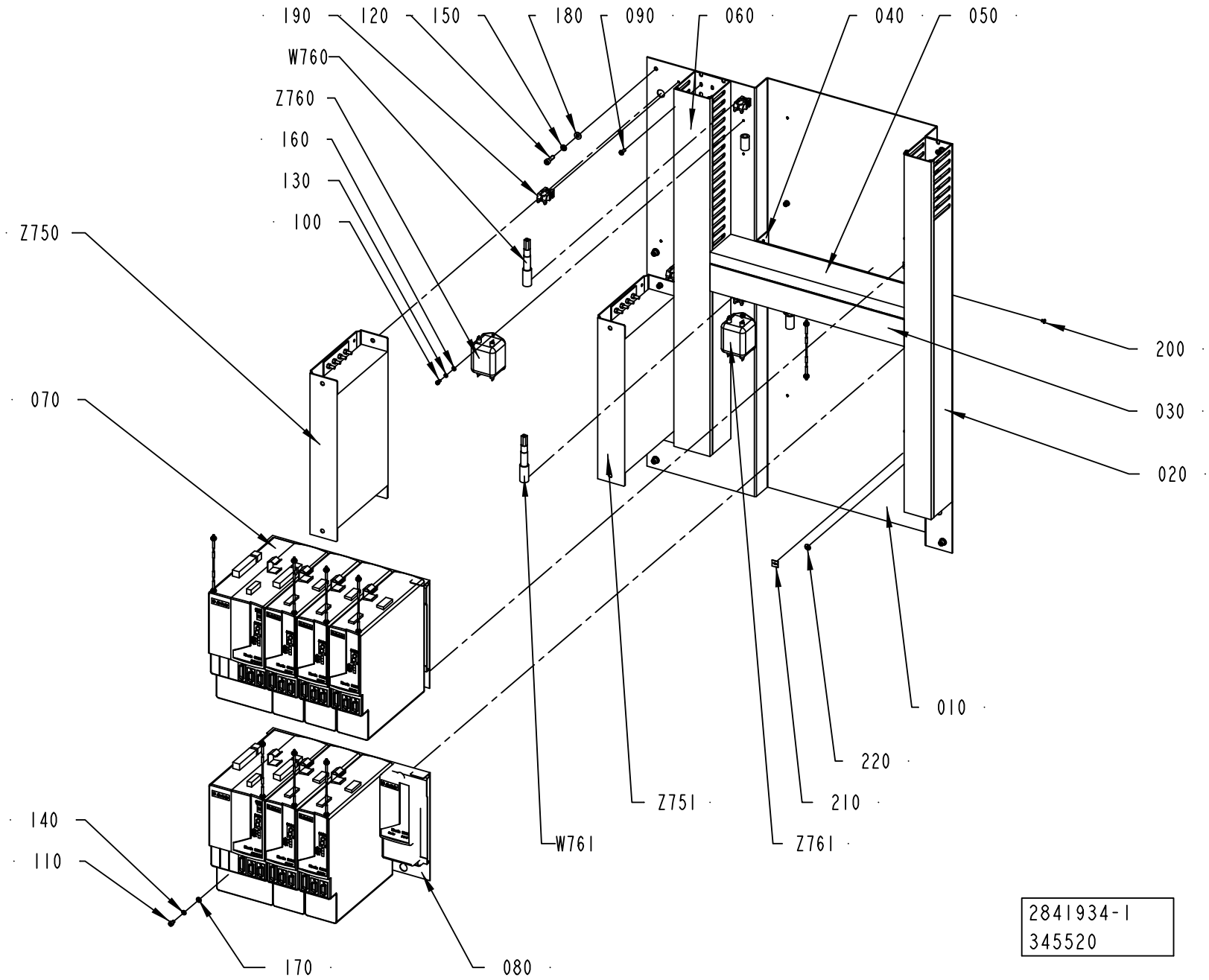
190
120
150
180
090
060
040
050
W760
Z760
160
130
100
Z750
070
200
030
020
010
220
210
Z751
W761
Z761
140
110
170
080
2841934-1
345520

ECM: 345533 - 20080701
Group number: 2841934-0100
Assembly Drawing: 2841934-1_1_AB

Pos	Part No	UN	Qty	Description	Page No
-					
010	2841927-0000		1	FRAME	
030	90181-0054	MM	500	CABLE DUCT 60X80MM	
040	2861073-0000		1	FRAME	
050	90181-0052	MM	500	CABLE DUCT 25X80MM	
060	90181-0055	MM	800	CABLE DUCT 80X80MM	
070	2861072-0100		1	POWER SUPPLY UNIT	**9-37**
080	2876478-0100		1	POWER SUPPLY UNIT	**9-39**
090	90181-0313		17	RIVET DUCTAFIX R4	
100	312115-0287		8	SCREW ISO4762 M4X8 A4 80	
110	312115-0323		10	SCREW ISO4762 M5X8 A4 80	
120	312115-0370		6	SCREW ISO4762 M6X20 A4 80	
130	315402-0136		8	LOCK WASHER FBB 4,1	
140	315402-0146		10	LOCK WASHER FBB 5,1	
150	315402-0156		6	LOCK WASHER FBB 6,5	
160	315105-0136		8	WASHER BRB 4,3X8 RFR	
170	315105-0146		10	WASHER BRB 5,3X10 RFR	
180	315105-0156		6	WASHER BRB 6,7X14 RFR	
190	90135-0039		4	SHIELD CLIP KLBU 4-13.5	
200	312155-0285		4	SCREW DIN 7991 MF6S M4X6 A4 70	
210	90194-0152		2	SIGN, EARTH	
220	2608177-0000		2	SIGN	
W760	90459-6145	MM	600	SCR. CABLE 4X6MM2	
W761	90459-6145	MM	600	SCR. CABLE 4X6MM2	
Z750	90459-2546		1	POWER RAIL 8 AXIS	
Z751	90459-2549		2	AC LINE FILTER 3-PHASE 30A, 2090-XXLF-X3	
Z760	90459-3931		1	LINE FILTER, 3EP1, 3A 120/250 VAC	
Z761	90459-3931		1	LINE FILTER, 3EP1, 3A 120/250 VAC	

Pos	Part No	UN	Qty	Description	Page No

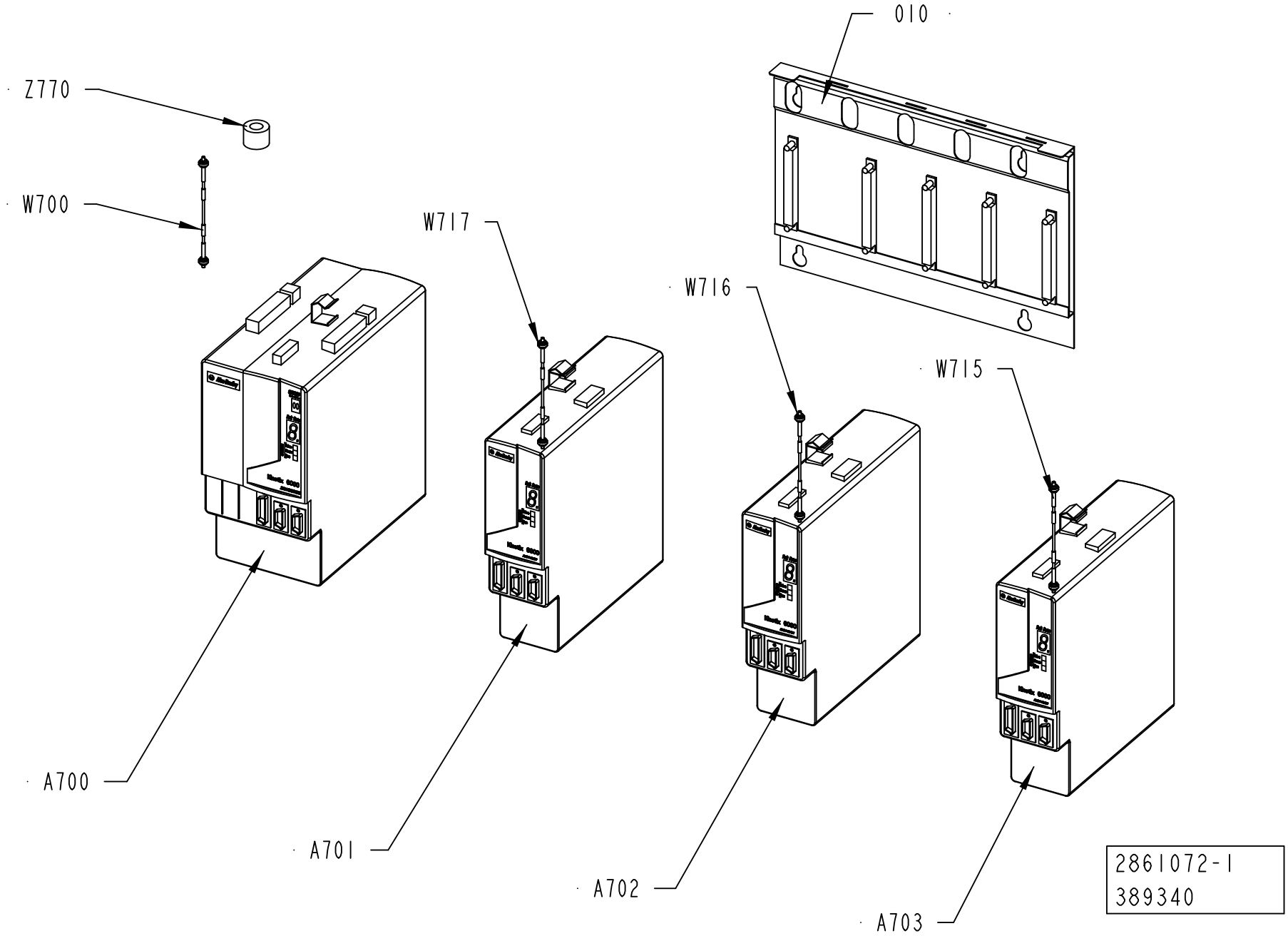
010
Z770
W700
W717
W716
W715
A700
A701
A702
A703
2861072-1
389340

ECM: 389357 - 20090701
Group number: 2861072-0100
Assembly Drawing: 2861072-1_1_AB

Pos	Part No	UN	Qty	Description	Page No
-					
010	90459-5191		1	SLIM POW. RAIL, KINETIX, 4 AX, 2094-PRS4	
A700	90600-5212		1	AXIS MOD. W. PS,2094-BC02-M02-S SERIES B	
A701	90600-5216		1	AXIS MOD. KINETIX 6000,2094-BM02-S SER.B	
A702	90600-5216		1	AXIS MOD. KINETIX 6000,2094-BM02-S SER.B	
A703	90600-5216		1	AXIS MOD. KINETIX 6000,2094-BM02-S SER.B	
W700	90459-2540		1	SERCOS CABLE 3.0M, 2090-SCEP3-0	
W715	90459-2536		1	SERCOS CABLE 0.1M, 2090-SCEP0-1	
W716	90459-2536		1	SERCOS CABLE 0.1M, 2090-SCEP0-1	
W717	90459-2536		1	SERCOS CABLE 0.1M, 2090-SCEP0-1	
Z770	90600-5249		1	FERRITE, B64290L616X38	

Pos	Part No	UN	Qty	Description	Page No

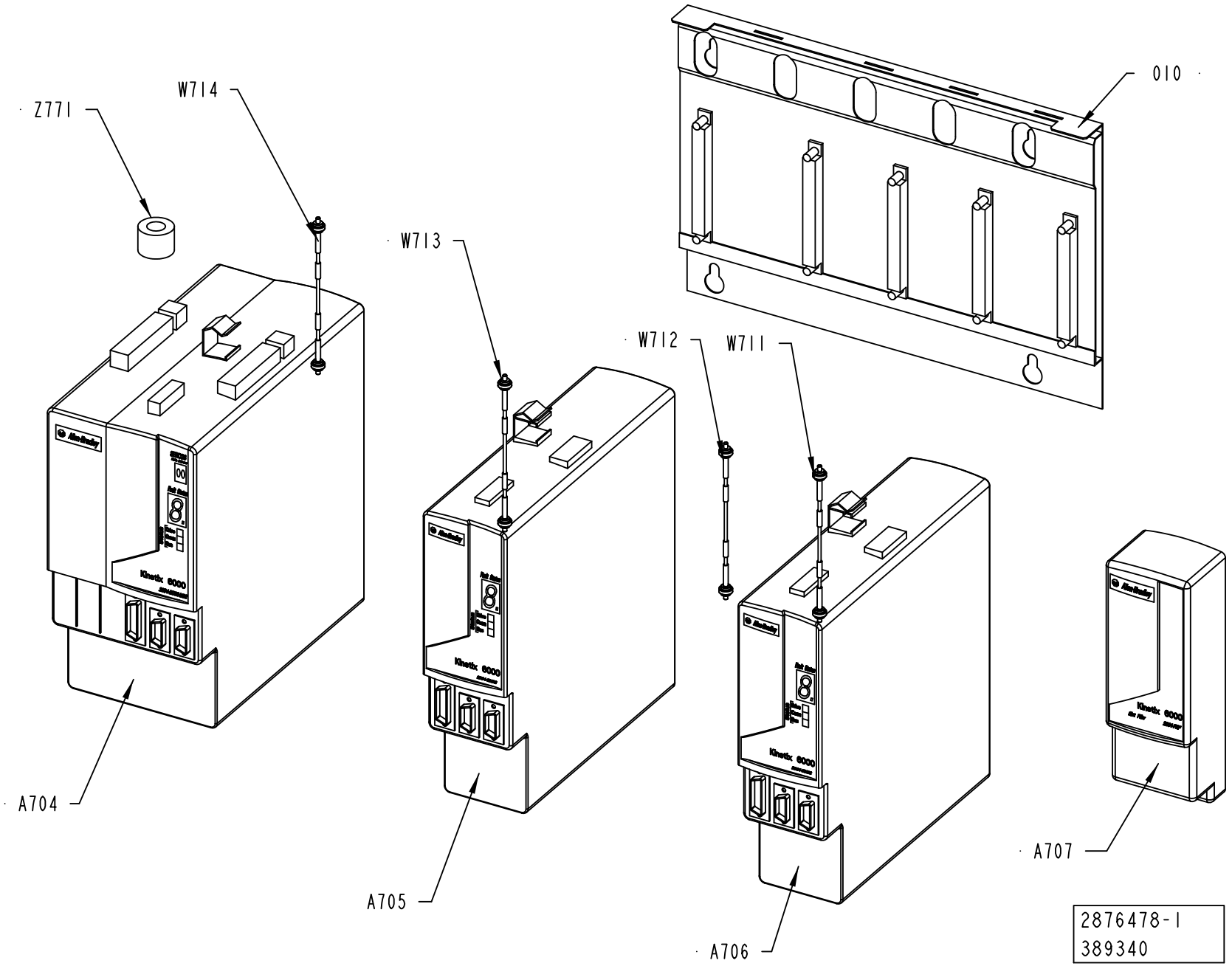
Z771
W714
W713
W712
W711
010
A704
A705
A706
A707
2876478-1
389340

ECM: 389358 - 20090701
Group number: 2876478-0100
Assembly Drawing: 2876478-1_1_AB

Pos	Part No	UN	Qty	Description	Page No
-					
010	90459-5191		1	SLIM POW. RAIL, KINETIX, 4 AX, 2094-PRS4	
A704	90600-5212		1	AXIS MOD. W. PS,2094-BC02-M02-S SERIES B	
A705	90600-5216		1	AXIS MOD. KINETIX 6000,2094-BM02-S SER.B	
A706	90600-5216		1	AXIS MOD. KINETIX 6000,2094-BM02-S SER.B	
A707	90459-2547		1	POWER RAIL SLOT FILLER MODULE, 2094-PRF	
W711	90459-2540		1	SERCOS CABLE 3.0M, 2090-SCEP3-0	
W712	90459-2536		1	SERCOS CABLE 0.1M, 2090-SCEP0-1	
W713	90459-2536		1	SERCOS CABLE 0.1M, 2090-SCEP0-1	
W714	90459-2539		1	SERCOS CABLE 1.0M, 2090-SCEP1-0	
Z771	90600-5249		1	FERRITE, B64290L616X38	

Pos	Part No	UN	Qty	Description	Page No

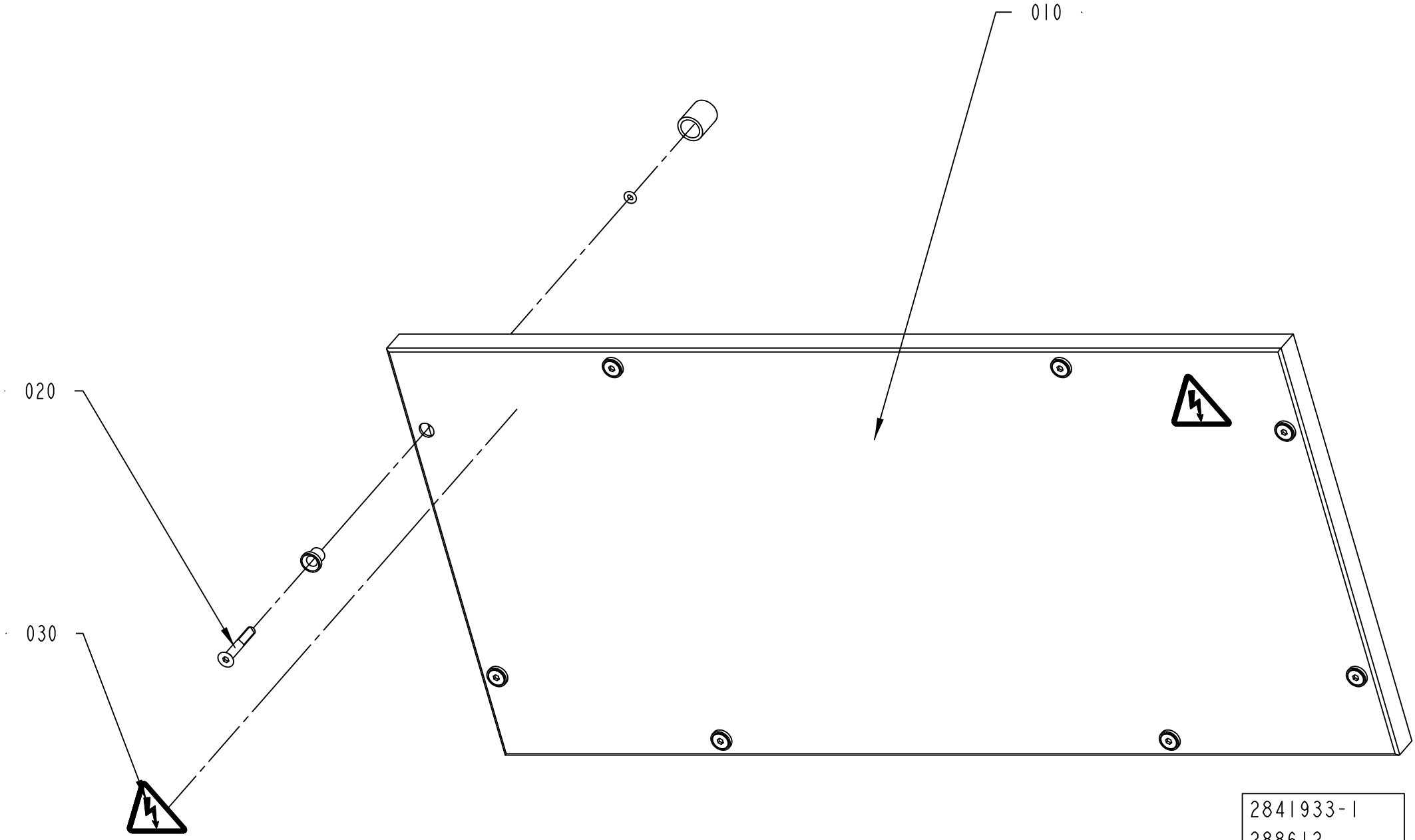
010
020
030
2841933-1
288612

ECM: 315406 - 20080215
Group number: 2841933-0100
Assembly Drawing: 2841933-1_1_AA

Pos	Part No	UN	Qty	Description	Page No
-					
010	2861064-0000		1	COVER	
020	90226-0458		8	MOUNTING SCREW	
030	359705-0015		2	WARNING SIGN ISO, RISK OF ELECTRIC SHOCK	

Pos	Part No	UN	Qty	Description	Page No

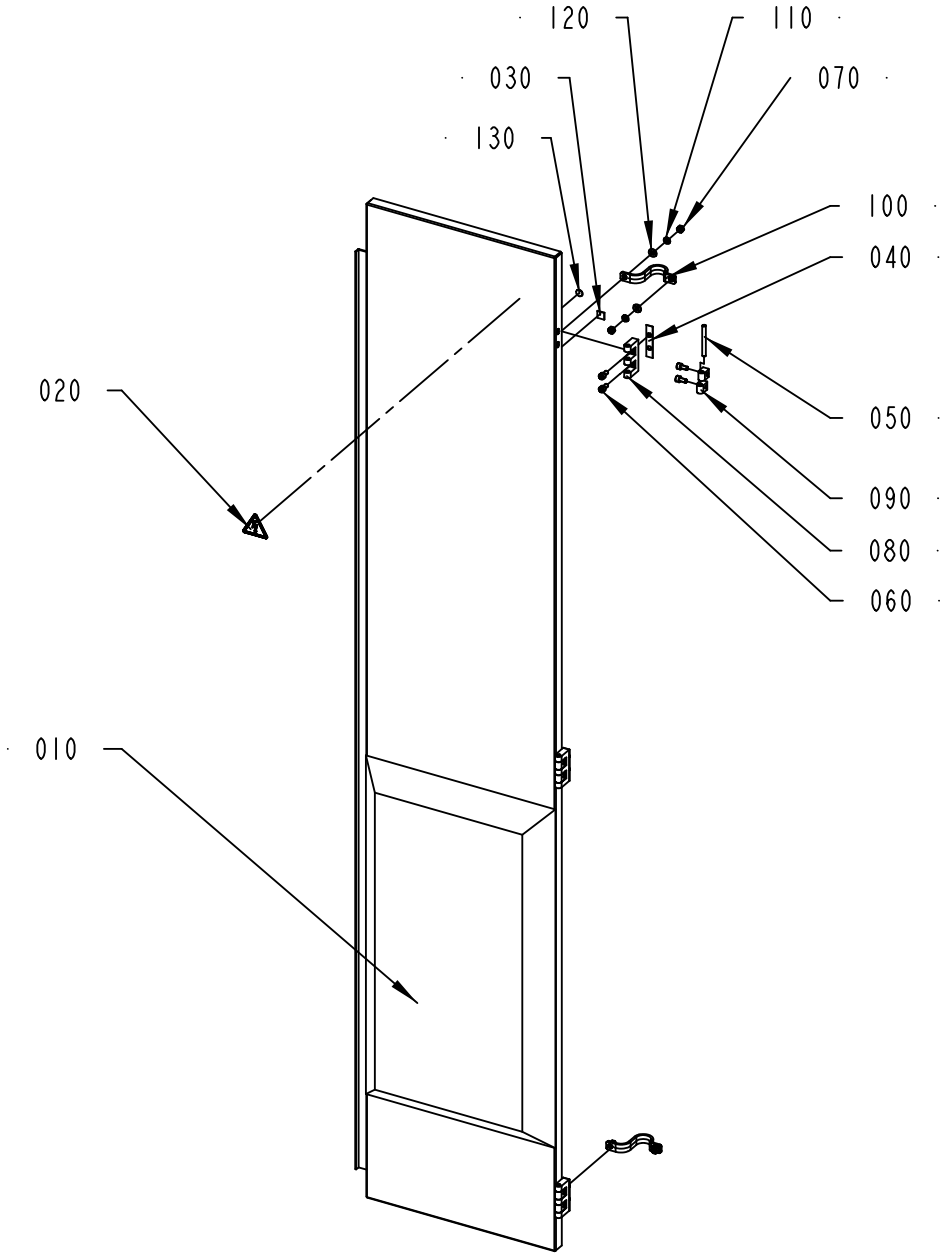

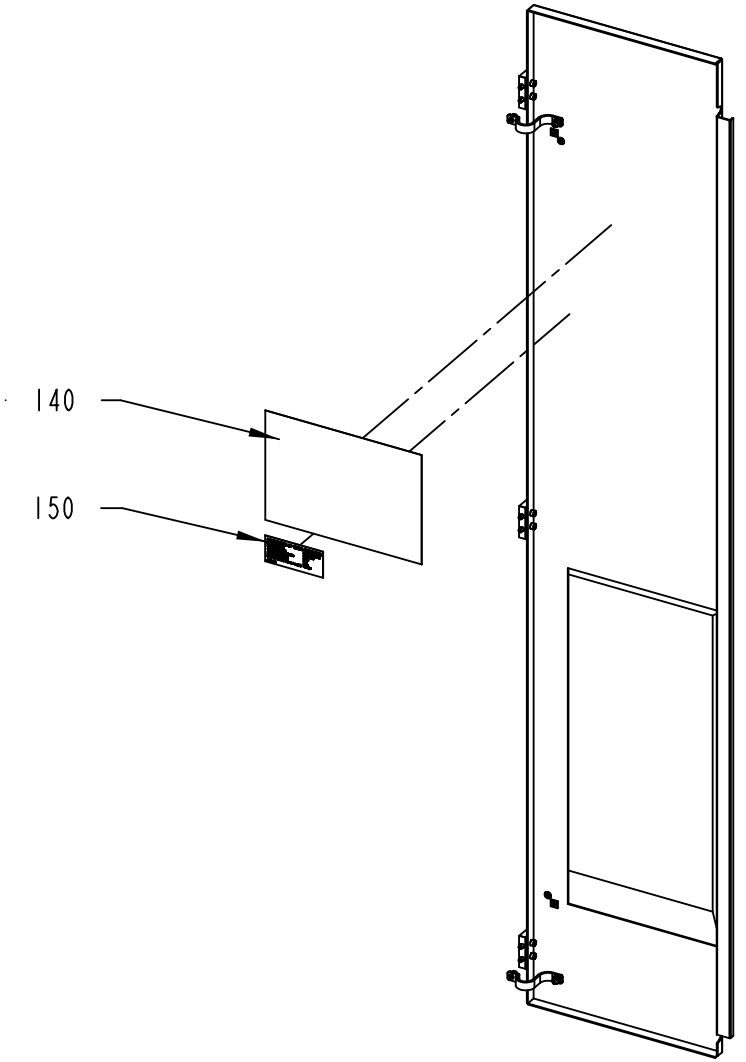

2841931-1
389340

ECM: 393196 - 20090701
Group number: 2841931-0100
Assembly Drawing: 2841931-1_1_AB

Pos	Part No	UN	Qty	Description	Page No
-					
010	2841929-0000		1	DOOR	
020	359705-0015		1	WARNING SIGN ISO, RISK OF ELECTRIC SHOCK	
030	90194-0152		2	SIGN, EARTH	
040	988666-0000		3	GASKET	
050	988685-0000		3	PIN	
060	312115-0366		13	SCREW ISO4762 M6X12 A4 80	
070	312605-0316		4	HEXAGON NUT, M6M M6 A280	
080	1035792-0000		3	E-HINGE	
090	1129770-0000		7	BLOCKING PIECE	
100	90135-0035		2	EARTH WIRE, L=250 MM 16 MM2	
110	315402-0156		4	LOCK WASHER FBB 6,5	
120	315105-0156		4	WASHER BRB 6,7X14 RFR	
130	2608177-0000		2	SIGN	
140	2886160-0000		1	FUSE PANEL LABEL	
150	90459-7229		1	IDENTIF. OF SINGLE CONDUCTORS, TEMPLATE	

Pos	Part No	UN	Qty	Description	Page No

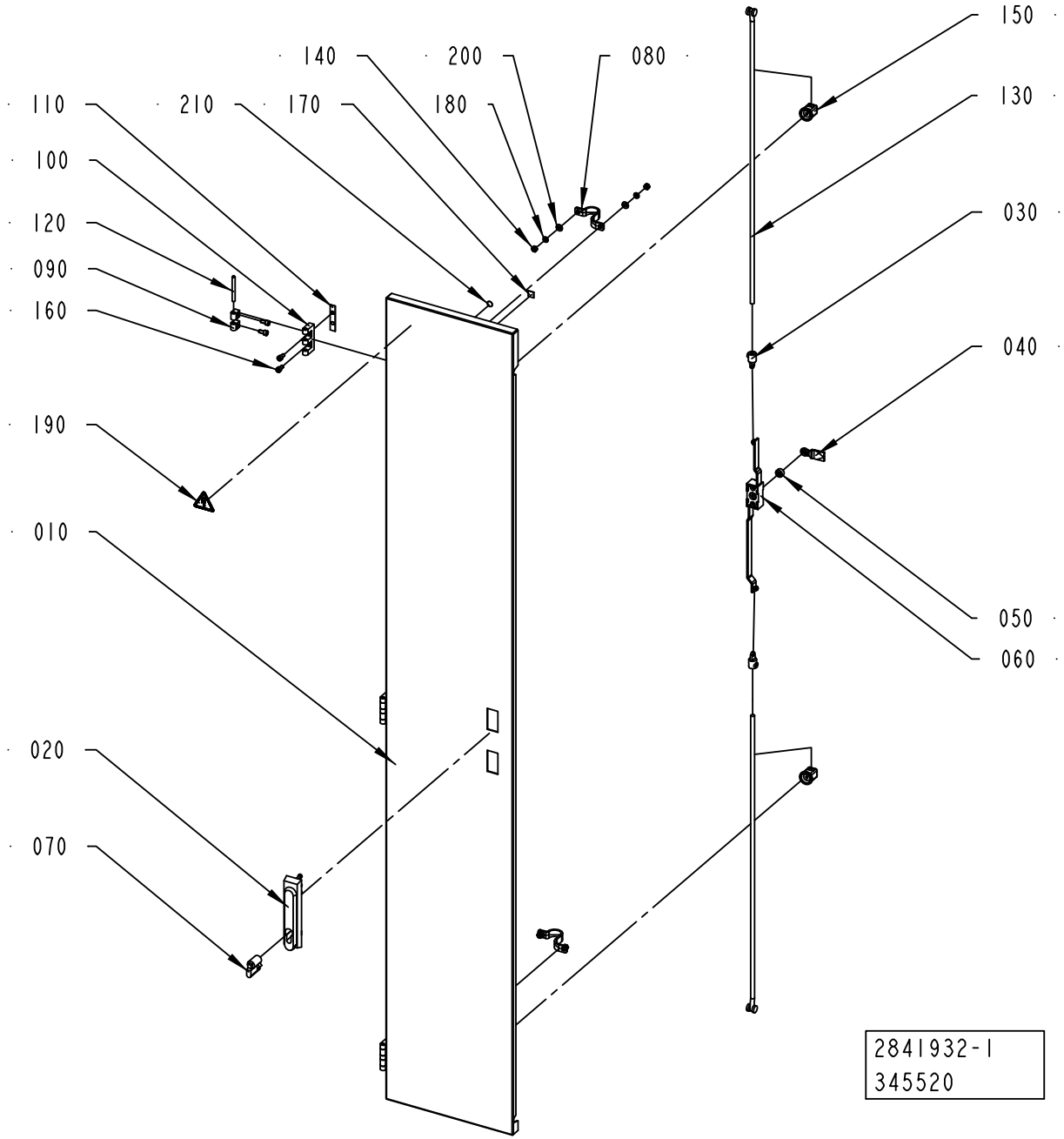
150
140
200
080
130
110
210
170
180
100
030
120
090
160
040
190
010
050
060
020
070
2841932-1
345520

ECM: 345532 - 20080701
Group number: 2841932-0100
Assembly Drawing: 2841932-1_1_AB

Pos	Part No	UN	Qty	Description	Page No
-					
010	2841930-0000		1	DOOR	
020	90237-0176		1	TURNING HANDLE, 1125-U190-A	
030	90237-0169		2	LOCK ADAPTER, 1000-U49	
040	90237-0156		1	LOCK BOLT, 1000-16	
050	90237-0155		1	LOCK ADAPTER, 1121-U40	
060	90237-0153		1	LOCK HOUSING, 1121-U26-0B	
070	90237-0129		1	LOCK CYLINDER, 1109-U6	
080	90135-0035		2	EARTH WIRE, L=250 MM 16 MM2	
090	1129770-0000		3	BLOCKING PIECE	
100	1035792-0000		3	E-HINGE	
110	988666-0000		3	GASKET	
120	988685-0000		3	PIN	
130	90237-0168		2	ROUND BAR WITH END WHEEL, 1049-U5	
140	312605-0316		4	HEXAGON NUT, M6M M6 A280	
150	90237-0152		2	GUIDE, 1001-U12	
150	90237-0151		2	GUIDE, 1001-U11	
160	312115-0368		12	SCREW ISO4762 M6X16 A4 80	
170	90194-0152		2	SIGN, EARTH	
180	315402-0156		4	LOCK WASHER FBB 6,5	
190	359705-0015		1	WARNING SIGN ISO, RISK OF ELECTRIC SHOCK	
200	315105-0156		4	WASHER BRB 6,7X14 RFR	
210	2608187-0000		2	BRACKET	

Pos	Part No	UN	Qty	Description	Page No

This page is intentionally left blank.

ECM: 380453 - 20090401
Group number: 2635131-0150
Assembly Drawing:

Pos	Part No	UN	Qty	Description	Page No	Pos	Part No	UN	Qty	Description	Page No
A3/FLEX TBA, A3/FLEX TPA											
	351161-0102	M	35	WIRE AWM 1X0,75 MM2 LIGHTBLUE							
	351164-0105	M	130	WIRE AWM 1X2,5 MM2 BLACK							
	351162-0109	M	7	WIRE AWM 1X16 MM2 YELLOW-GREEN							
	351164-0106	M	41	WIRE AWM 1X4 MM2 BLACK							
	351162-0104	M	70	WIRE AWM 1X1,5 MM2 YELLOW-GREEN							
	351161-0104	M	75	WIRE AWM 1X1,5 MM2 LIGHTBLUE							
	351162-0102	M	120	WIRE AWM 1X0,75 MM2 YELLOW-GREEN							
	351164-0102	M	75	WIRE AWM 1X0,75 MM2 BLACK							
	351161-0105	M	6	WIRE AWM 1X2,5 MM2 LIGHTBLUE							
	351164-0104	M	120	WIRE AWM 1X1,5 MM2 BLACK							
	351161-0111	M	8	WIRE AWM 1X35 MM2 LIGHTBLUE							
	351160-0106	M	15	WIRE AWM 1X4 MM2 DARKBLUE							
	351160-0102	M	2500	WIRE AWM 1X0,75 MM2 DARKBLUE							
	351162-0106	M	5	WIRE AWM 1X4 MM2 YELLOW-GREEN							
	351160-0104	M	15	WIRE AWM 1X1,5 MM2 DARKBLUE							
	351162-0107	M	34	WIRE AWM 1X6 MM2 YELLOW-GREEN							
	351164-0107	M	78	WIRE AWM 1X6 MM2 BLACK							
	351160-0105	M	25	WIRE AWM 1X2,5 MM2 DARKBLUE							
	351162-0105	M	54	WIRE AWM 1X2,5 MM2 YELLOW-GREEN							
A3/FLEX TGA											
	351162-0102	M	120	WIRE AWM 1X0,75 MM2 YELLOW-GREEN							
	351162-0109	M	7	WIRE AWM 1X16 MM2 YELLOW-GREEN							
	351162-0105	M	65	WIRE AWM 1X2,5 MM2 YELLOW-GREEN							
	351161-0111	M	8	WIRE AWM 1X35 MM2 LIGHTBLUE							
	351162-0107	M	34	WIRE AWM 1X6 MM2 YELLOW-GREEN							
	351162-0106	M	5	WIRE AWM 1X4 MM2 YELLOW-GREEN							
	351162-0104	M	70	WIRE AWM 1X1,5 MM2 YELLOW-GREEN							
	351161-0105	M	15	WIRE AWM 1X2,5 MM2 LIGHTBLUE							
	351164-0107	M	78	WIRE AWM 1X6 MM2 BLACK							
	351160-0102	M	2600	WIRE AWM 1X0,75 MM2 DARKBLUE							
	351160-0104	M	15	WIRE AWM 1X1,5 MM2 DARKBLUE							
	351160-0105	M	25	WIRE AWM 1X2,5 MM2 DARKBLUE							
	351164-0106	M	41	WIRE AWM 1X4 MM2 BLACK							
	351160-0106	M	15	WIRE AWM 1X4 MM2 DARKBLUE							
	351164-0105	M	160	WIRE AWM 1X2,5 MM2 BLACK							
	351161-0102	M	35	WIRE AWM 1X0,75 MM2 LIGHTBLUE							
	351161-0104	M	75	WIRE AWM 1X1,5 MM2 LIGHTBLUE							
	351164-0104	M	120	WIRE AWM 1X1,5 MM2 BLACK							
	351164-0102	M	75	WIRE AWM 1X0,75 MM2 BLACK							
Common Parts											
	351164-0111	M	15	WIRE AWM 1X35 MM2 BLACK							

Machine Type	Group Description	Used-In	Group Number	Page No

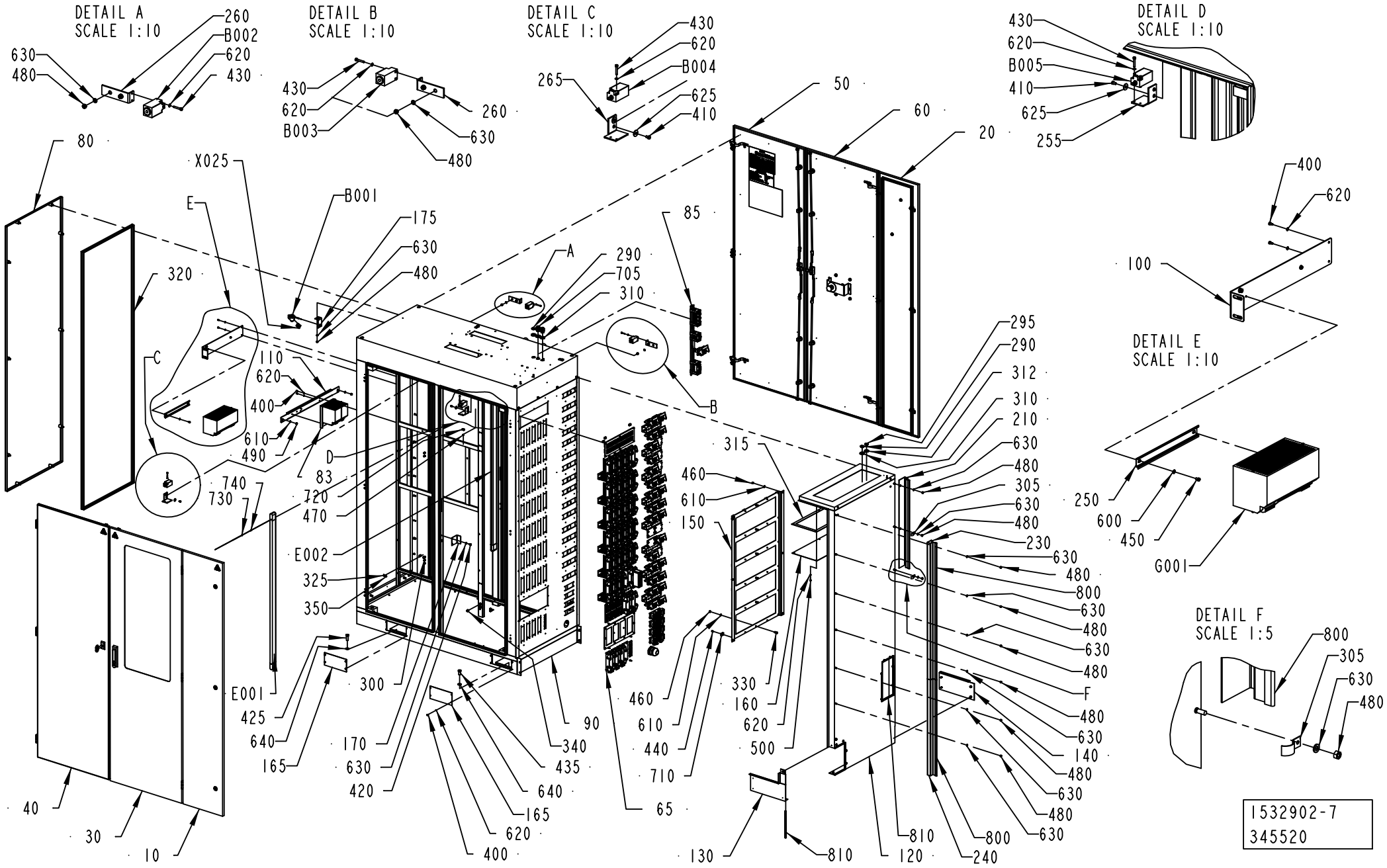
DETAIL A
SCALE 1:10
260
B002
620
430
630
480
DETAIL B
SCALE 1:10
430
620
B003
260
630
480
DETAIL C
SCALE 1:10
430
620
B004
265
625
410
DETAIL D
SCALE 1:10
430
620
B005
410
625
255
50
60
20
80
X025
E
B001
175
630
480
320
C
110
620
400
610
490
740
730
D
83
720
470
E002
325
350
E001
425
640
165
300
170
630
420
340
435
640
165
620
400
90
65
460
610
440
710
460
610
150
330
160
620
500
315
295
290
312
310
210
630
480
305
630
480
230
630
480
800
630
480
630
480
F
480
630
140
480
630
480
630
810
120
810
800
240
130
85
A
290
705
310
B
400
620
100
DETAIL E
SCALE 1:10
250
600
450
G001
DETAIL F
SCALE 1:5
800
305
630
480
1532902-7
345520

ECM: 387946 - 20090403
Group number: 1532902-0250
Assembly Drawing: 1532902-7_1_AC

This list covers pages from 9-48 to 9-51

Pos	Part No	UN	Qty	Description	Page No
A3/FLEX TBA, A3/FLEX TPA (See drawing on pages: 9-48, 9-50)					
083	2624549-0100		1	POWER SUPPLY UNIT	**9-53**
085	2624551-0200		1	CONNECTION DEVICE	**9-55**
090	2844055-0001		1	WELDED CABINET	
120	2765462-0001		1	COVERING PANEL	
210	2748701-0000		1	BRACKET	
230	2747630-0000		1	BRACKET	
240	2748702-0000		1	BRACKET	
290	90002-0004		2	BLANK-OFF PLUG, PR 22,5 SKINDICHT-BLK16	
295	90002-0016		1	BLANK-OFF PLUG PR 20.4 SKINDICHT-BLK13,5	
300	90062-0015		11	LOCK WASHER SERRAT.EXT.GEAR,6,4/11 H=0,7	
310	90099-0110		4	NUT, PR 22,5 (PG16)	
325	90194-0152		17	SIGN, EARTH	
350	2608177-0000		16	SIGN	
705	352103-0108		2	CABLE GLAND, ST 13,5 , PR20,4/PG13,5	
720	352113-0205		6	ANCHOR PLATES FOR STRIPS, TYPE TM2S8-C10	
800	90143-0059	MM	2550	SELF GRIPPING GASKET, 4610069	
G001	90459-2938		1	POWER SUPPLY, 6EP1437-3BA00	
A3/FLEX TGA (See drawing on pages: 9-48, 9-50)					
083	2624549-0100		1	POWER SUPPLY UNIT	**9-53**
085	2878362-0100		1	CONNECTION DEVICE	**9-57**
090	2844055-0001		1	WELDED CABINET	
120	2765462-0001		1	COVERING PANEL	
210	2748701-0000		1	BRACKET	
230	2747630-0000		1	BRACKET	
240	2748702-0000		1	BRACKET	
290	90002-0004		2	BLANK-OFF PLUG, PR 22,5 SKINDICHT-BLK16	
295	90002-0016		1	BLANK-OFF PLUG PR 20.4 SKINDICHT-BLK13,5	
300	90062-0015		11	LOCK WASHER SERRAT.EXT.GEAR,6,4/11 H=0,7	
310	90099-0110		4	NUT, PR 22,5 (PG16)	
325	90194-0152		17	SIGN, EARTH	
350	2608177-0000		16	SIGN	
705	352103-0108		2	CABLE GLAND, ST 13,5 , PR20,4/PG13,5	
720	352113-0205		6	ANCHOR PLATES FOR STRIPS, TYPE TM2S8-C10	
800	90143-0059	MM	2550	SELF GRIPPING GASKET, 4610069	
G001	90459-2938		1	POWER SUPPLY, 6EP1437-3BA00	
Common Parts					
010	2789109-0100		1	DOOR	**9-59**
020	2789107-0100		1	DOOR	**9-61**
030	1532920-0100		1	DOOR	**9-63**
040	1532923-0100		1	DOOR	**9-65**
050	1532932-0250		1	DOOR	**9-67**
060	1532935-0100		1	DOOR	**9-69**
065	2563166-0250		1	CONNECTOR	**9-71, 9-73**
080	1532904-0100		1	DOOR	**9-75**
100	1532927-0000		1	FASTENING PLATE	
110	2530287-0000		1	PLATE	
130	1532928-0000		1	COVERING PLATE	
140	1532929-0000		1	COVERING PLATE	
150	1532911-0000		1	FASTENING PLATE	
160	1532909-0000		1	PLATE	
165	1038408-0000		4	COVERING PLATE	
170	1140769-0000		1	DOOR STOPPER	
175	1129318-0000		1	BRACKET	
250	2530286-0000		1	RAIL	
255	2606215-0000		1	BRACKET	
260	2608106-0000		2	BRACKET	
265	2608107-0000		1	BRACKET	
300	90062-0015		11	LOCK WASHER SERRAT.EXT.GEAR,6,4/11 H=0,7	
305	90074-0011		2	CABLE CLIPS, D=14 MM	
312	90099-0118		1	NUT, PR 20,4 (PG13,5)	
315	1532926-0000		1	GASKET	
320	90143-0057	M	36	STRIP EMKA 1011-05 21X11MM	
330	90287-0137		6	SPACER BOLT DSSM60100	
340	90287-0157		2	SCREW M6SF FLAT HEAD M6X10 88	
400	312105-0287		20	SCREW M6S ISO 4017 M4X8 A470	
410	312105-0323		4	SCREW M6S ISO 4017 M5X8 A480	
420	312105-0364		2	SCREW M6S ISO 4017 M6X10 A480	
425	312105-0538		2	SCREW M6S ISO 4017 M12X35 A480	
430	312111-0297		8	SCREW HEX.SOCK.HD.MC6S-TT 4X25 88 FZB	
435	312105-0534		2	SCREW M6S ISO 4017 M12X25 A480	
440	312121-0289		24	SCREW ISO 1207 M4X10 4.8-5.8 Z.PL.	
450	312121-0323		2	SCREW ISO 1207 M5X8 4.8-5.8 Z.PL.	
460	312601-0316		12	HEXAGON NUT, DIN 934 M6 8 FZB	
470	312605-0312		9	HEXAGON NUT, M6M M4 A280	
480	312605-0316		37	HEXAGON NUT, M6M M6 A280	
490	312810-0316		6	HEXAGON NUT, NY-LOCK M6 FZB	
500	312812-0312		6	HEXAGON NUT, NY-LOCK M4 A480	
600	315101-0146		2	WASHER PLAIN, BRB, 5,3/10 H=1	
610	315101-0153		18	WASHER PLAIN, BRB, 6,4/12 H=1,5	
620	315105-0136		34	WASHER BRB 4,3X8 RFR	
625	90005-0060		4	WASHER PLAIN, RBS 6,4/M6)/18,H=1,5	
630	315105-0153		39	WASHER BRB 6,4X12 RFR	
640	315105-0178		4	WASHER BRB 13X24 RFR	

Machine Type | Group Description | Used-In | Group Number | Page No

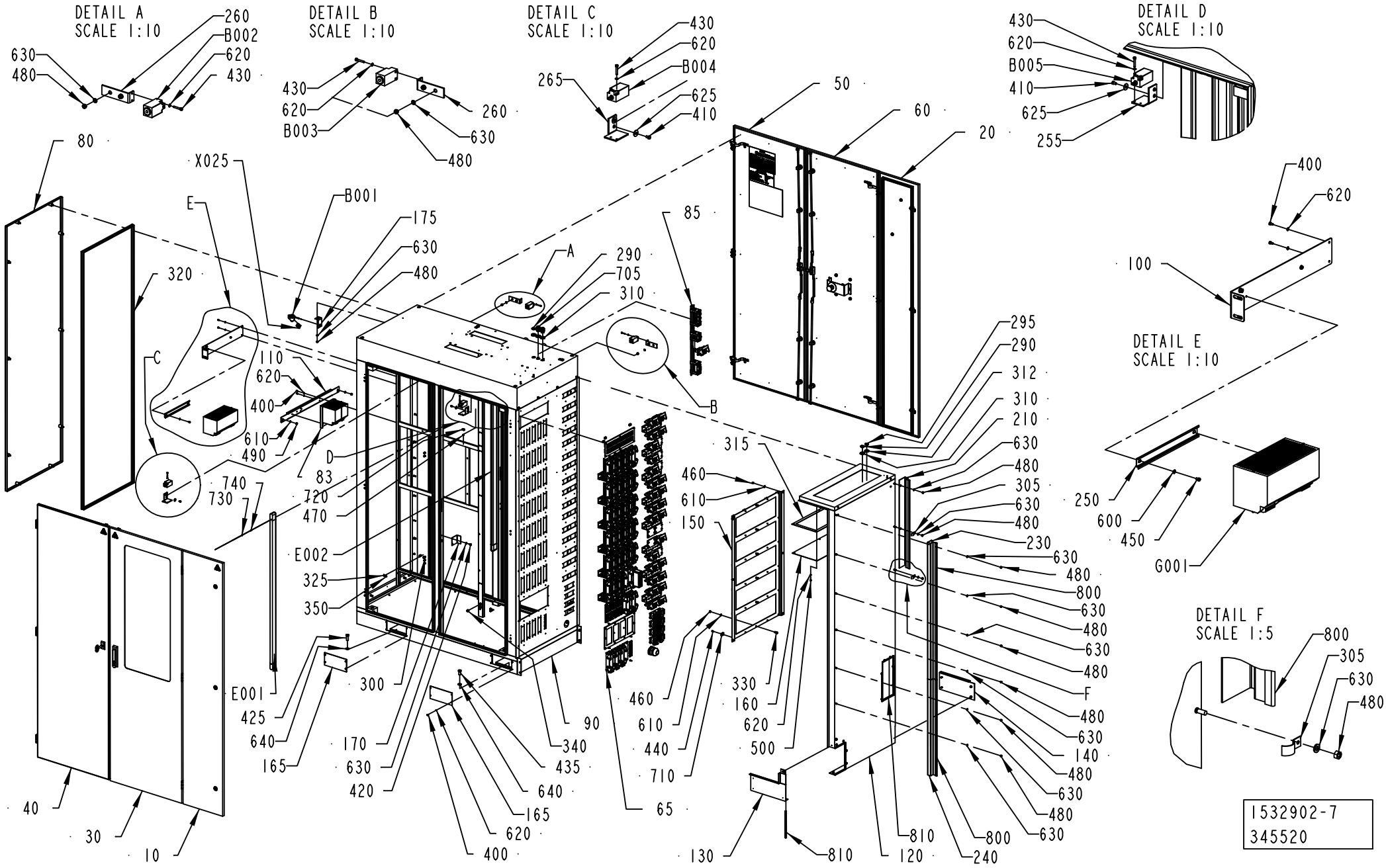
DETAIL A
SCALE 1:10
260
B002
620
430
630
480
DETAIL B
SCALE 1:10
430
620
B003
260
630
480
DETAIL C
SCALE 1:10
430
620
B004
265
625
410
DETAIL D
SCALE 1:10
430
620
B005
410
625
255
50
60
20
80
X025
E
B001
175
630
480
320
C
110
620
400
610
490
740
730
D
83
720
470
E002
325
350
E001
425
640
165
300
170
630
420
340
435
640
165
620
400
90
65
85
A
290
705
310
B
460
610
150
460
610
440
710
315
330
160
620
500
130
810
810
120
800
240
295
290
312
310
210
630
480
305
630
480
230
630
480
800
630
480
630
480
F
480
630
140
480
630
480
630
DETAIL E
SCALE 1:10
400
620
100
250
600
450
G001
DETAIL F
SCALE 1:5
800
305
630
480
40
30
10
1532902-7
345520

ECM: 387946 - 20090403
Group number: 1532902-0250
Assembly Drawing: 1532902-7_1_AC

This list covers pages from 9-48 to 9-51

Pos	Part No	UN	Qty	Description	Page No
Common Parts (Cont'd)					
710	352113-0203		27	ANCHOR PLATES FOR STRIPS, TYPE TM3S8-M0	
730	315105-0124		4	WASHER BRB 3,2X6 RFR	
740	312115-0222		4	SCREW ISO4762 M3X8 A4 80	
810	90143-0060	MM	1550	EDGE STRIP 9,5X6,3MM BLACK PVC	
820	2889859-0000		1	COVER PLATE	
B001	90326-0053		1	THERMOCOUPLE, 12826-35	
B002	90044-0192		1	LIMIT SW. SZ2586.000	
B003	90044-0192		1	LIMIT SW. SZ2586.000	
B004	90044-0192		1	LIMIT SW. SZ2586.000	
B005	90044-0192		1	LIMIT SW. SZ2586.000	
E001	90600-4050		1	LIGHT FIXTURE, TCH128 1XTL5-28W/830 HF	
	90600-4240		*1*	*FLUORESC. TUBE,MASTER TL5 HE 28W/830 SLV*	
E002	90600-4050		1	LIGHT FIXTURE, TCH128 1XTL5-28W/830 HF	
	90600-4240		*1*	*FLUORESC. TUBE,MASTER TL5 HE 28W/830 SLV*	
X025	90326-0020		1	PLUG, FEMALE YELLOW CR-AL	

Pos	Part No	UN	Qty	Description	Page No

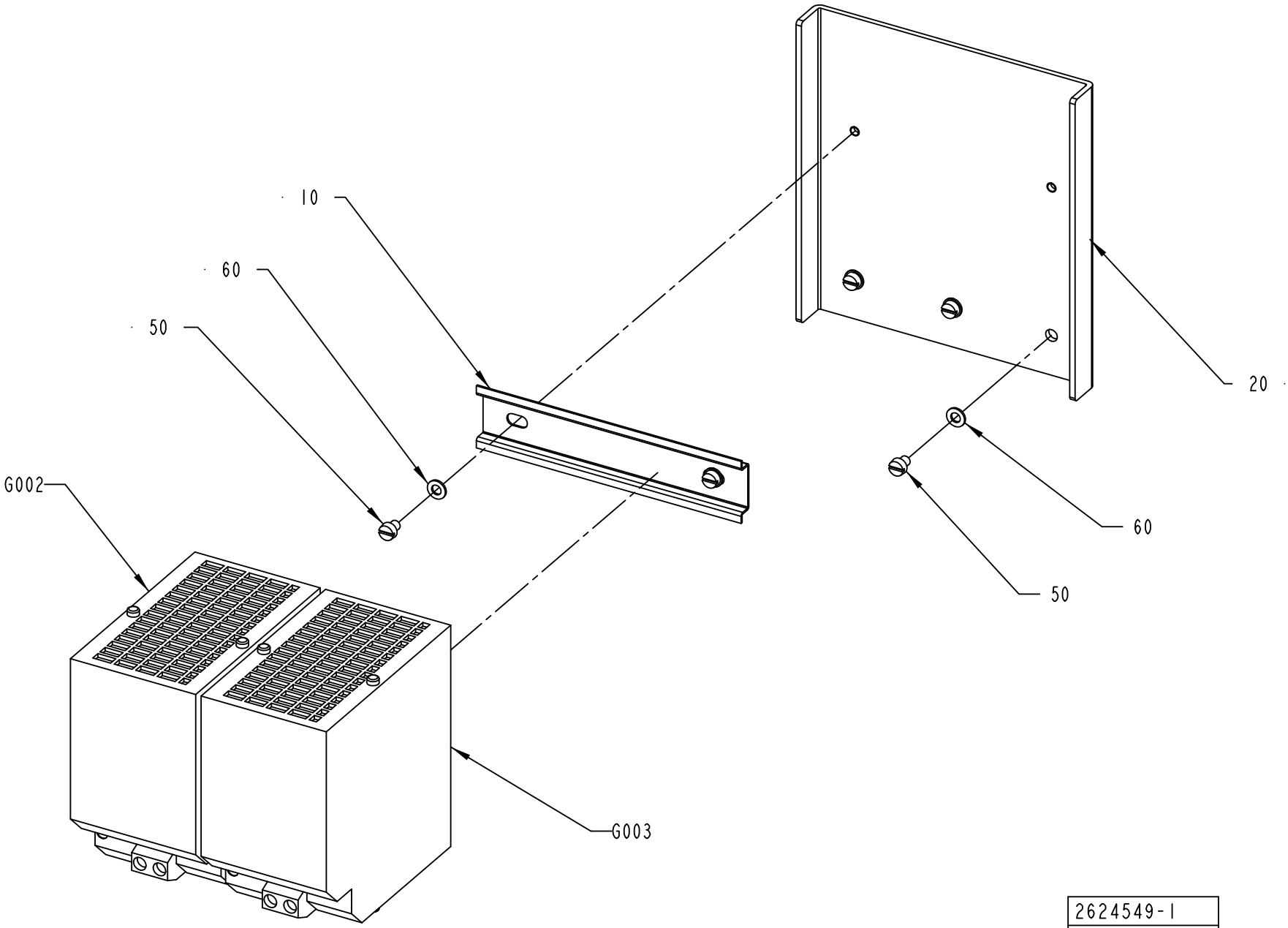

2624549-1
ECM 132638

ECM: 185565 - 20041104
Group number: 2624549-0100
Assembly Drawing: 2624549-1_1_AA

Pos	Part No	UN	Qty	Description	Page No
-					
010	2624550-0000		1	RAIL	
020	2619170-0000		1	PLATE	
050	312121-0321		5	SCREW ISO 1207 M5X6 4.8-5.8 Z.PL.	
060	315101-0146		5	WASHER PLAIN, BRB, 5,3/10 H=1	
G002	90459-2939		1	POWER SUPPLY UNIT 6EP1961-3BA00	
G003	90459-2939		1	POWER SUPPLY UNIT 6EP1961-3BA00	

Pos	Part No	UN	Qty	Description	Page No

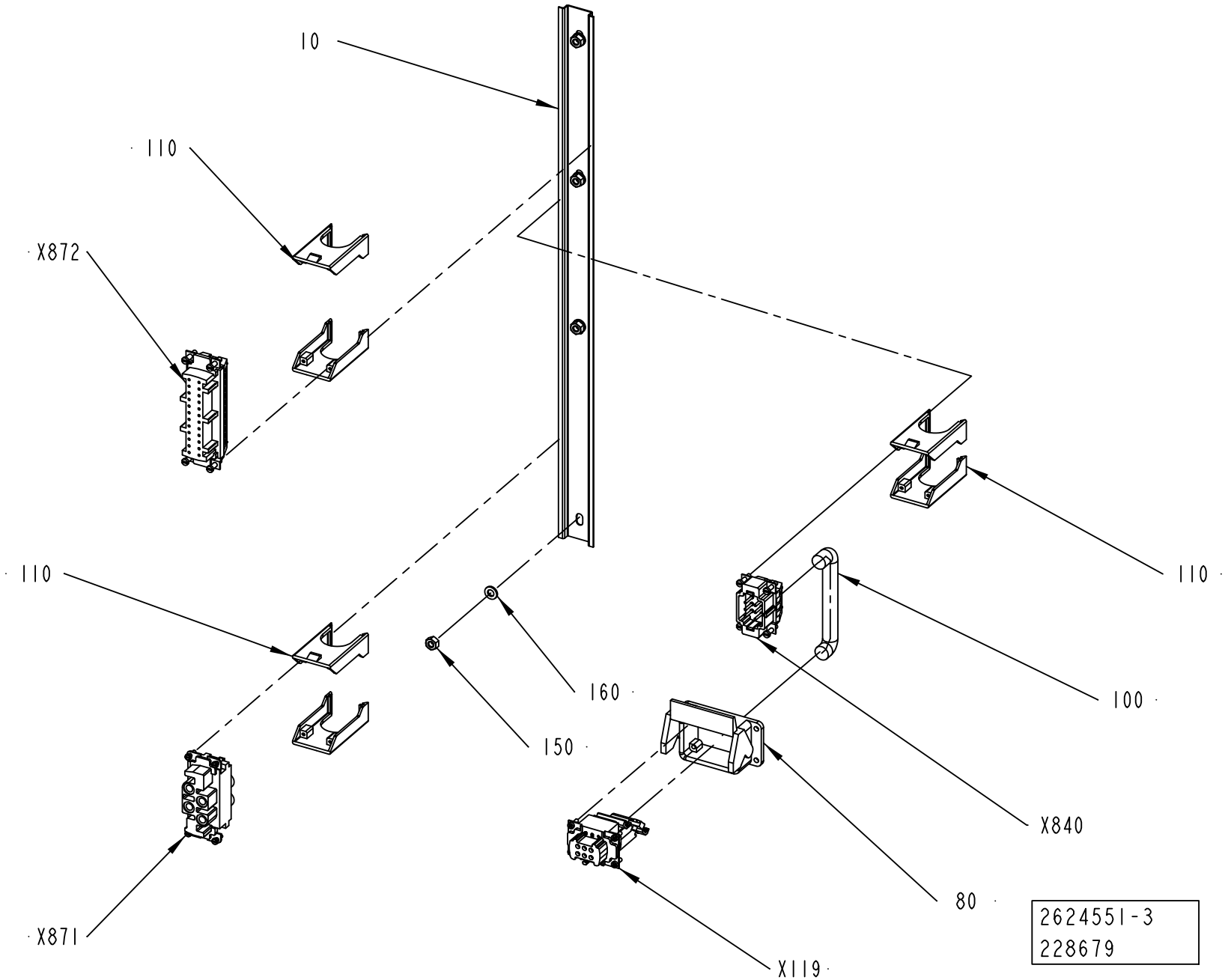
10
110
X872
110
110
160
150
100
X840
80
X871
X119
2624551-3
228679

ECM: 260071 - 20060412
Group number: 2624551-0200
Assembly Drawing: 2624551-3_1_AA

Pos	Part No	UN	Qty	Description	Page No
A3/FLEX DIMC/FLEX (See drawing on page: 9-54)					
080	90110-0123		1	HOUSING, 09 30 006 0301	
100	90220-0105	MM	2250	SCR. CABLE 4X2,5MM2	
110	90459-6859		3	HOUS.SIZE 6-24B HAN-SNAP, 09 33 000 9980	
X119	90459-6624		1	FEMALE INSERT HAN E AV, 09 33 006 4735	
X840	90110-0052		1	MALE INSERT HAN 6E 09 33 006 2601	
A3/FLEX NODIMC (See drawing on page: 9-54)					
110	90459-6859		2	HOUS.SIZE 6-24B HAN-SNAP, 09 33 000 9980	
Common Parts					
010	2789126-0000		1	RAIL	
150	312605-0316		4	HEXAGON NUT, M6M M6 A280	
160	315105-0153		4	WASHER BRB 6,4X12 RFR	
X871	90459-1452		1	FEMALE INSERT HAN K 09 38 006 2711	
X872	90110-0057		1	FEMALE INSERT HAN 24 E 09 33 002 4201	

Pos	Part No	UN	Qty	Description	Page No

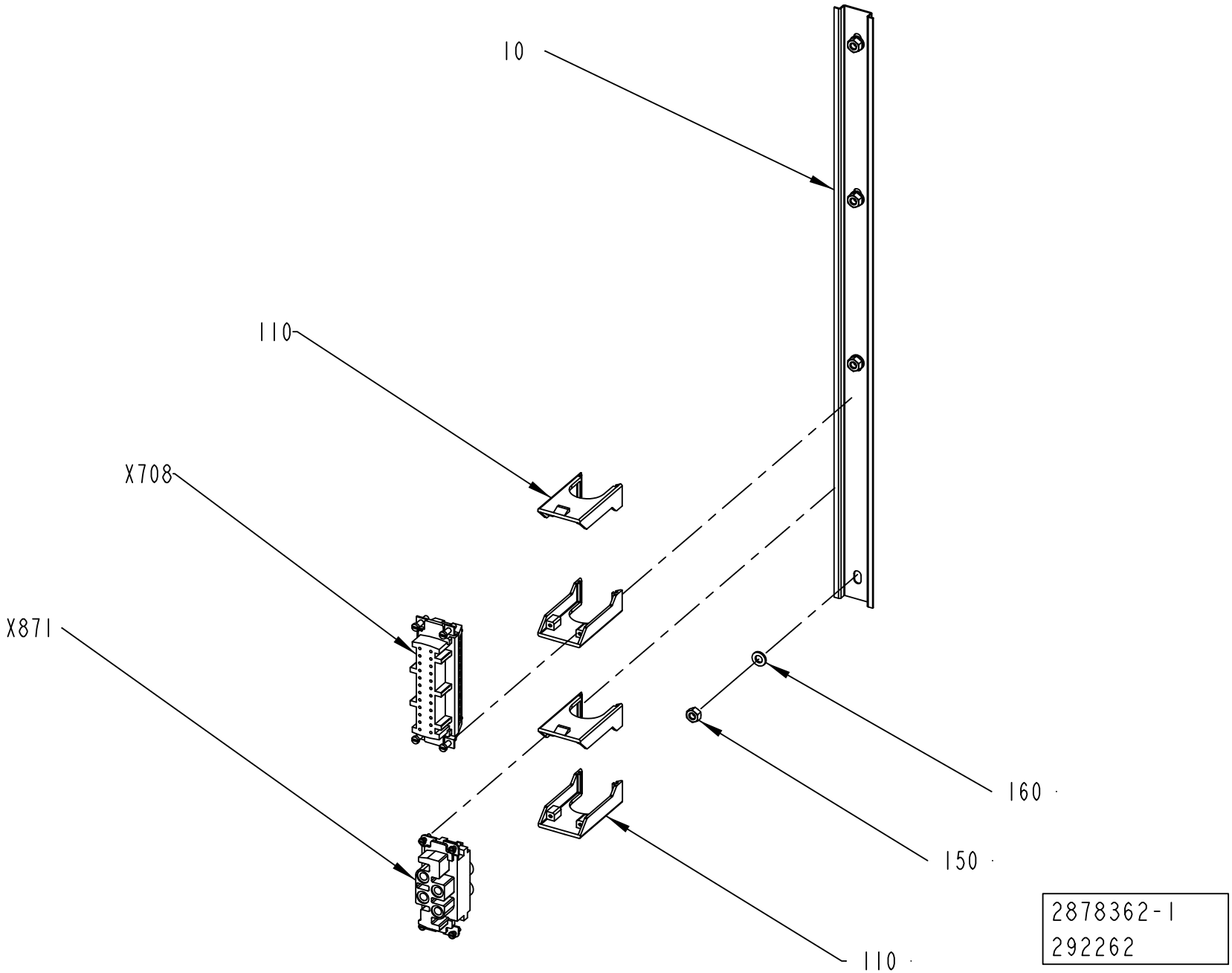
10
110
X708
X871
160
150
110
2878362-1
292262

ECM: 294862 - 20061227
Group number: 2878362-0100
Assembly Drawing: 2878362-1_1_AA

Pos	Part No	UN	Qty	Description	Page No
-					
010	2789126-0000		1	RAIL	
110	90459-6859		2	HOUS.SIZE 6-24B HAN-SNAP, 09 33 000 9980	
150	312605-0316		4	HEXAGON NUT, M6M M6 A280	
160	315105-0153		4	WASHER BRB 6,4X12 RFR	
X708	90110-0057		1	FEMALE INSERT HAN 24 E 09 33 002 4201	
X871	90459-1452		1	FEMALE INSERT HAN K 09 38 006 2711	

Pos	Part No	UN	Qty	Description	Page No

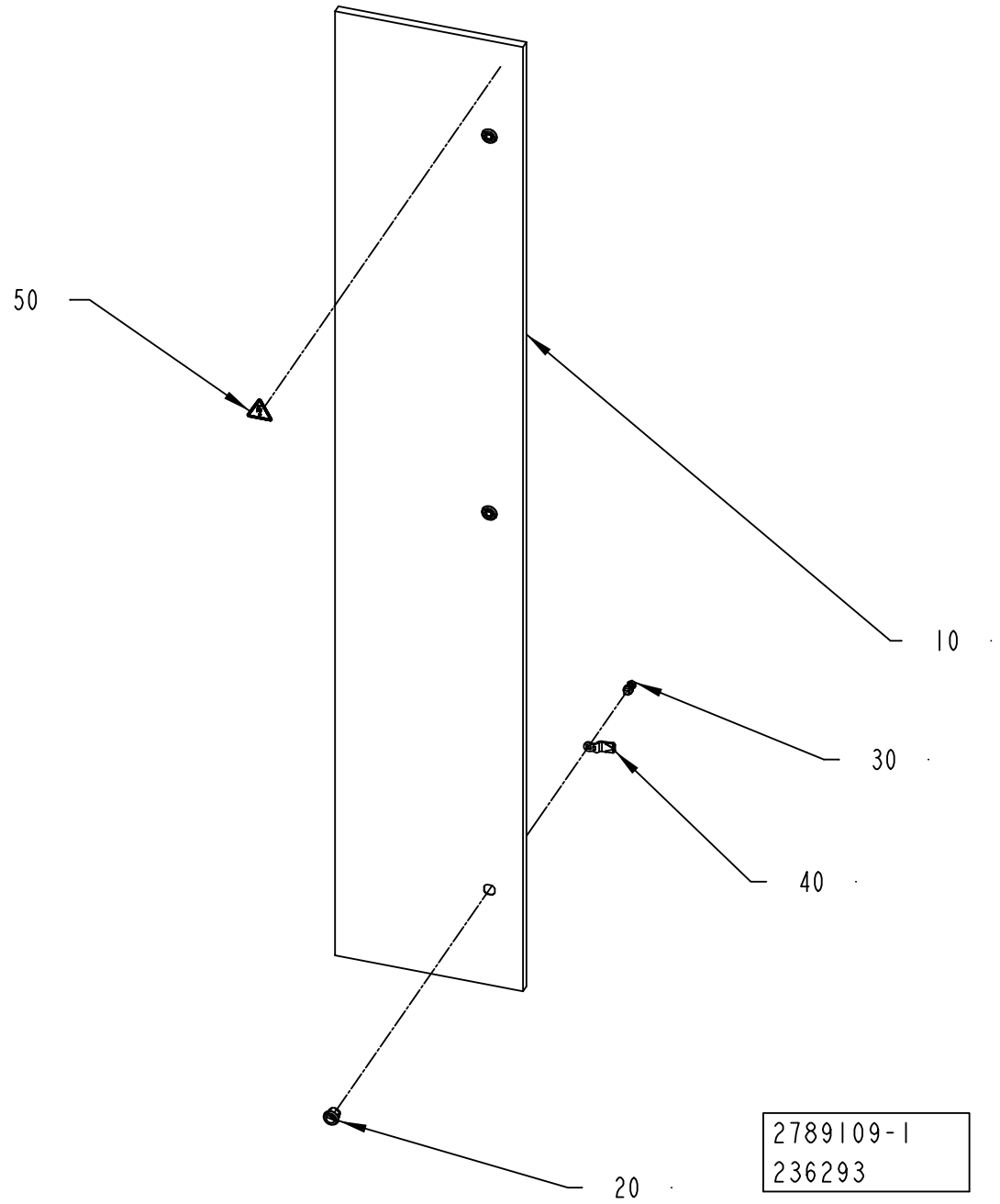
50
10
30
40
20
2789109-1
236293

ECM: 236483 - 20060101
Group number: 2789109-0100
Assembly Drawing: 2789109-1_1_AA

Pos	Part No	UN	Qty	Description	Page No
-					
010	2789110-0000		1	DOOR	
020	90237-0319		3	LOCK HOUSING, 1000-U134	
030	90237-0320		3	LOCK HOUSING, 1000-U136	
040	90237-0157		3	LOCK BOLT, 1000-230	
050	359705-0015		1	WARNING SIGN ISO, RISK OF ELECTRIC SHOCK	

Pos	Part No	UN	Qty	Description	Page No

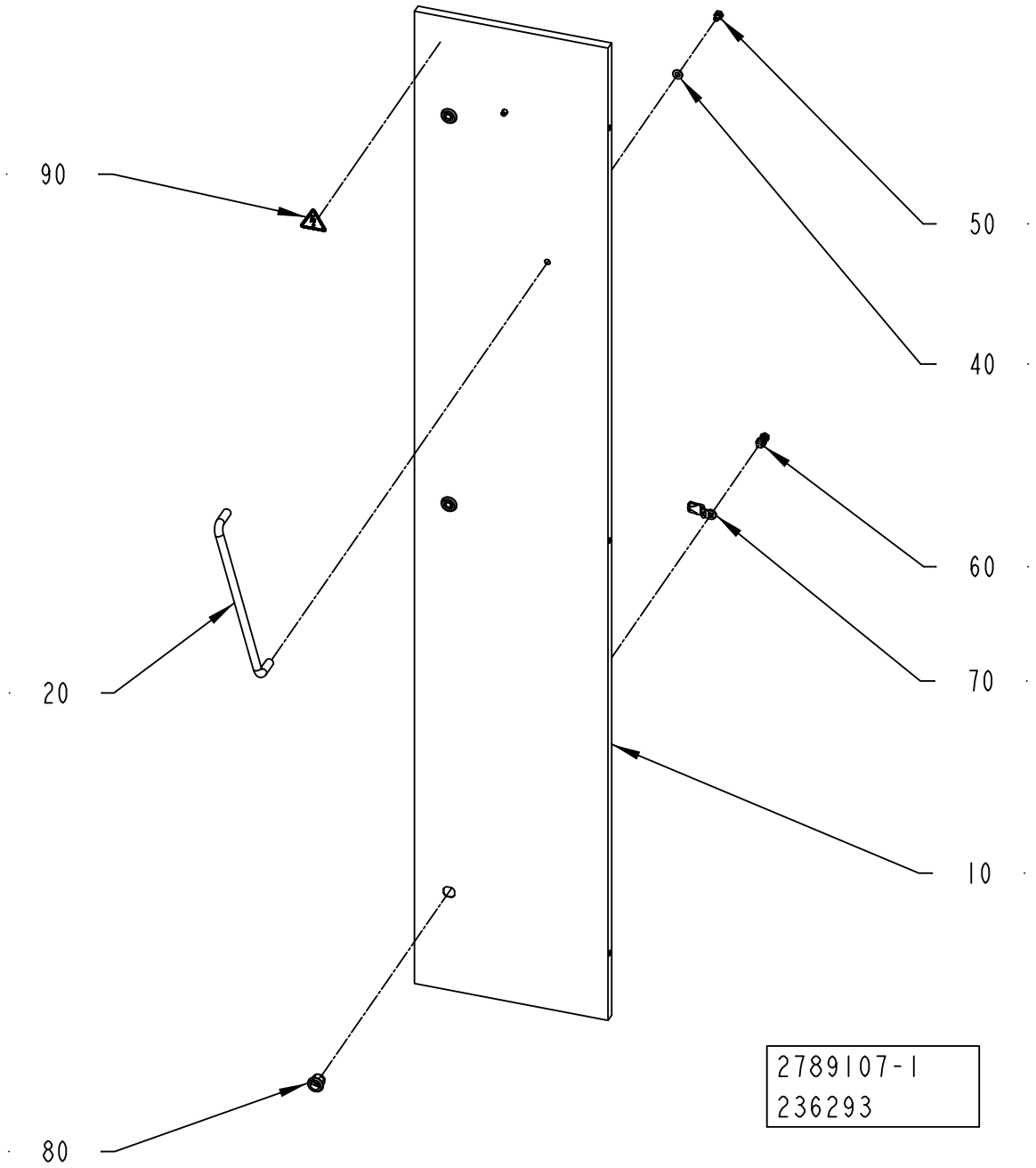
90
50
40
20
60
70
10
80
2789107-1
236293

ECM: 236293 - 20060101
Group number: 2789107-0100
Assembly Drawing: 2789107-1_1_AA

Pos	Part No	UN	Qty	Description	Page No
-					
010	2789108-0000		1	DOOR	
020	90017-0015		1	HANDLE, NO. 14.4012.02.308	
040	90005-0077		2	WASHER PL.RND.NYL.8,4/7, H=2	
050	312105-0447		2	SCREW M6S ISO 4017 M8X12 A480	
060	90237-0320		3	LOCK HOUSING, 1000-U136	
070	90237-0157		3	LOCK BOLT, 1000-230	
080	90237-0319		3	LOCK HOUSING, 1000-U134	
090	359705-0015		1	WARNING SIGN ISO, RISK OF ELECTRIC SHOCK	

Pos	Part No	UN	Qty	Description	Page No

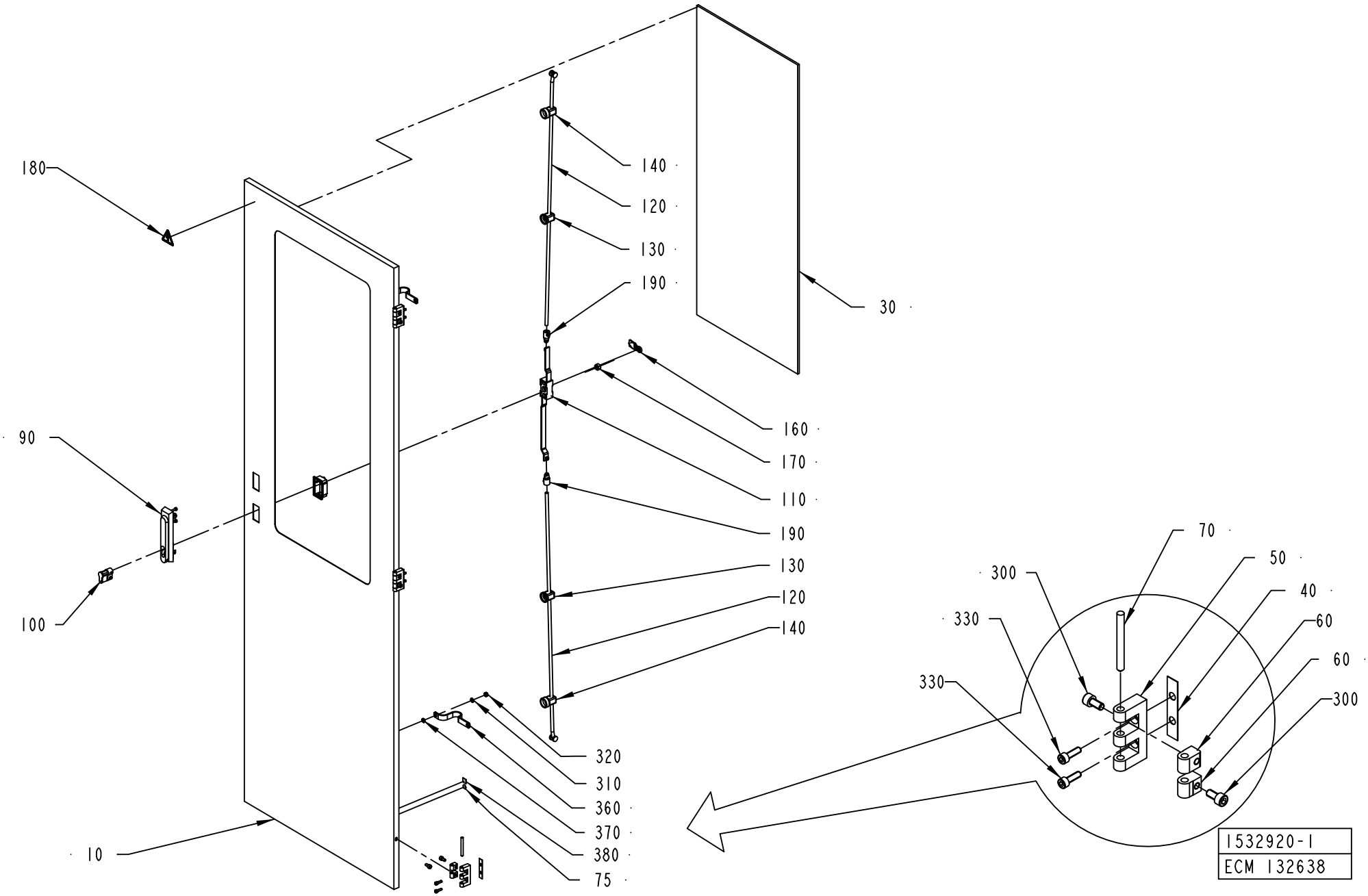
180
140
120
130
190
30
90
160
170
110
190
130
120
140
100
320
310
360
370
380
75
10
70
50
40
60
60
300
330
330
300
1532920-1
ECM 132638

ECM: 315259 - 20080215
Group number: 1532920-0100
Assembly Drawing: 1532920-1_1_AB

Pos	Part No	UN	Qty	Description	Page No
-					
010	1532921-0000		1	DOOR	
030	2530288-0000		1	GLASS PANE	
040	988666-0000		3	GASKET	
050	1035792-0000		3	E-HINGE	
060	1129770-0000		6	BLOCKING PIECE	
070	988685-0000		3	PIN	
075	2608177-0000		2	SIGN	
090	90237-0176		1	TURNING HANDLE, 1125-U190-A	
100	90237-0128		1	LOCK CYLINDER, 1109-SU125	
110	90237-0153		1	LOCK HOUSING, 1121-U26-0B	
120	90237-0168		2	ROUND BAR WITH END WHEEL, 1049-U5	
130	90237-0151		2	GUIDE, 1001-U11	
140	90237-0152		2	GUIDE, 1001-U12	
160	90237-0156		1	LOCK BOLT, 1000-16	
170	90237-0155		1	LOCK ADAPTER, 1121-U40	
180	359705-0015		1	WARNING SIGN ISO, RISK OF ELECTRIC SHOCK	
190	90237-0169		2	LOCK ADAPTER, 1000-U49	
300	312115-0366		6	SCREW ISO4762 M6X12 A4 80	
310	315105-0153		2	WASHER BRB 6,4X12 RFR	
320	312605-0316		2	HEXAGON NUT, M6M M6 A280	
330	312115-0329		6	SCREW ISO4762 M5X16 A4 80	
360	90135-0035		2	EARTH WIRE, L=250 MM 16 MM2	
370	90062-0015		2	LOCK WASHER SERRAT.EXT.GEAR,6,4/11 H=0,7	
380	90194-0152		2	SIGN, EARTH	

Pos	Part No	UN	Qty	Description	Page No

Machine Type | Group Description | Used-In | Group Number | Page No

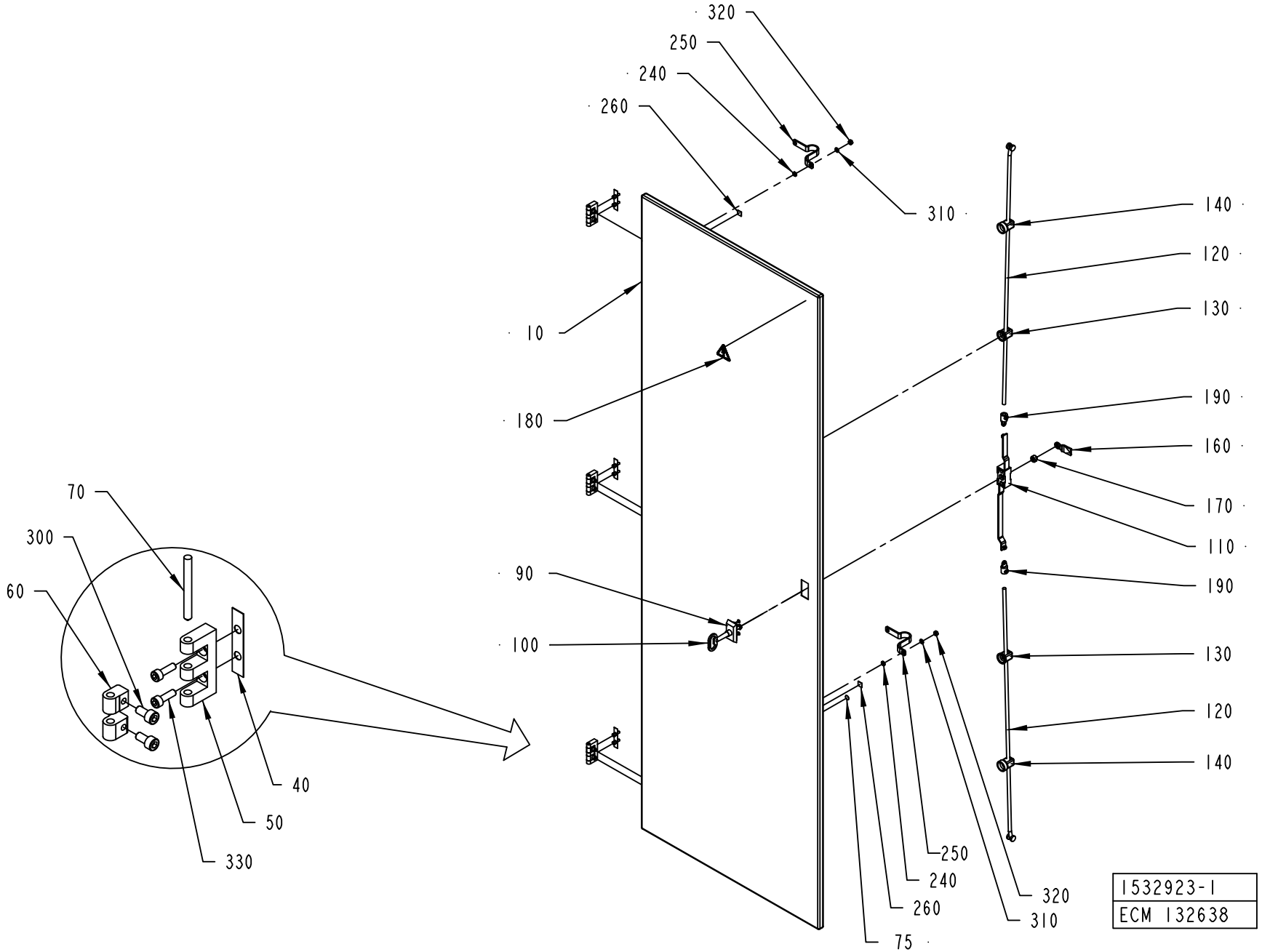
320
250
240
260
310
140
120
130
10
180
190
160
170
110
190
90
100
130
120
140
70
300
60
40
50
330
250
240
260
320
310
75
1532923-1
ECM 132638

ECM: 385727 - 20090402
Group number: 1532923-0100
Assembly Drawing: 1532923-1_1_AB

Pos	Part No	UN	Qty	Description	Page No
-					
010	1532924-0000		1	DOOR	
040	988666-0000		3	GASKET	
050	1035792-0000		3	E-HINGE	
060	1129770-0000		6	BLOCKING PIECE	
070	988685-0000		1	PIN	
075	2608177-0000		2	SIGN	
090	90237-0160		1	ESCUTCHEON WITH SQUARE, 1121-U23/U13	
100	90237-0324		1	KEY, 1104-02 FOR SQUARE 8 MM	
110	90237-0153		1	LOCK HOUSING, 1121-U26-0B	
120	90237-0168		2	ROUND BAR WITH END WHEEL, 1049-U5	
130	90237-0151		2	GUIDE, 1001-U11	
140	90237-0152		2	GUIDE, 1001-U12	
160	90237-0156		1	LOCK BOLT, 1000-16	
170	90237-0155		1	LOCK ADAPTER, 1121-U40	
180	359705-0015		1	WARNING SIGN ISO, RISK OF ELECTRIC SHOCK	
190	90237-0169		2	LOCK ADAPTER, 1000-U49	
240	90062-0015		2	LOCK WASHER SERRAT.EXT.GEAR,6,4/11 H=0,7	
250	90135-0035		2	EARTH WIRE, L=250 MM 16 MM2	
260	90194-0152		2	SIGN, EARTH	
300	312115-0366		6	SCREW ISO4762 M6X12 A4 80	
310	315105-0153		2	WASHER BRB 6,4X12 RFR	
320	312605-0316		2	HEXAGON NUT, M6M M6 A280	
330	312115-0329		6	SCREW ISO4762 M5X16 A4 80	

Pos	Part No	UN	Qty	Description	Page No

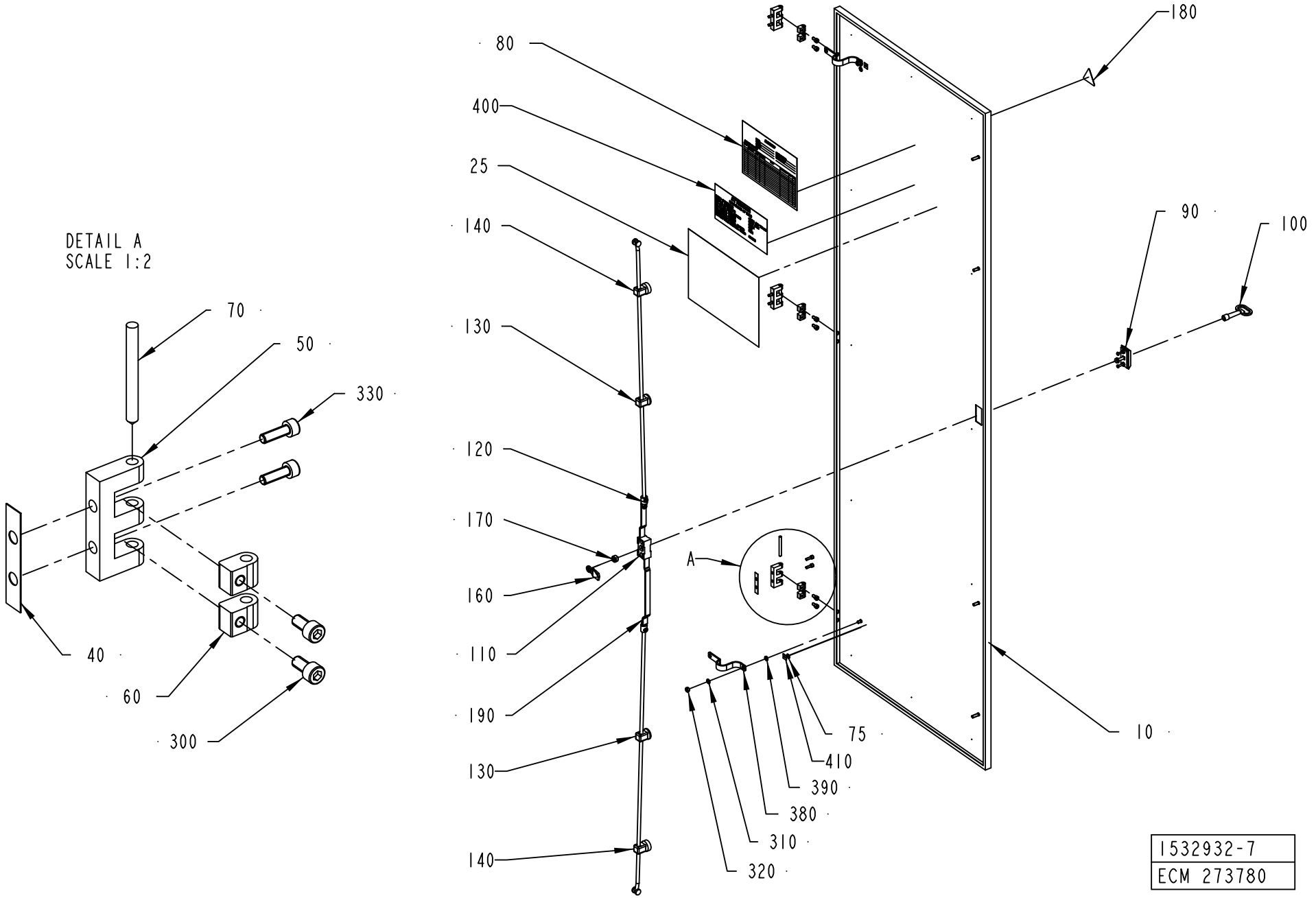
DETAIL A
SCALE 1:2
70
50
330
40
60
300
80
400
25
140
130
120
170
160
110
190
130
140
180
90
100
A
10
75
410
390
380
310
320
1532932-7
ECM 273780

ECM: 389360 - 20090701
Group number: 1532932-0250
Assembly Drawing: 1532932-7_1_AA

Pos	Part No	UN	Qty	Description	Page No
A3/FLEX TBA, A3/FLEX TPA					
025	2851036-0000		1	FUSE PANEL LABEL	
A3/FLEX TGA					
025	2878363-0000		1	FUSE PANEL LABEL	
Common Parts					
010	1532933-0000		1	DOOR	
040	988666-0000		3	GASKET	
050	1035792-0000		3	E-HINGE	
060	1129770-0000		6	BLOCKING PIECE	
070	988685-0000		3	PIN	
075	2608177-0000		2	SIGN	
080	90600-2068		1	DELIVERED DESIGN SIGN, 90600-2068	
090	90237-0160		1	ESCUTCHEON WITH SQUARE, 1121-U23/U13	
100	90237-0324		1	KEY, 1104-02 FOR SQUARE 8 MM	
110	90237-0153		1	LOCK HOUSING, 1121-U26-0B	
120	90237-0168		2	ROUND BAR WITH END WHEEL, 1049-U5	
130	90237-0151		2	GUIDE, 1001-U11	
140	90237-0152		2	GUIDE, 1001-U12	
160	90237-0156		1	LOCK BOLT, 1000-16	
170	90237-0155		1	LOCK ADAPTER, 1121-U40	
180	359705-0015		1	WARNING SIGN ISO, RISK OF ELECTRIC SHOCK	
190	90237-0169		2	LOCK ADAPTER, 1000-U49	
300	312115-0366		6	SCREW ISO4762 M6X12 A4 80	
310	315105-0153		2	WASHER BRB 6,4X12 RFR	
320	312605-0316		2	HEXAGON NUT, M6M M6 A280	
330	312115-0329		6	SCREW ISO4762 M5X16 A4 80	
380	90135-0035		2	EARTH WIRE, L=250 MM 16 MM2	
390	90062-0015		2	LOCK WASHER SERRAT.EXT.GEAR,6,4/11 H=0,7	
400	90459-7229		1	IDENTIF. OF SINGLE CONDUCTORS, TEMPLATE	
410	90194-0152		2	SIGN, EARTH	

Pos	Part No	UN	Qty	Description	Page No

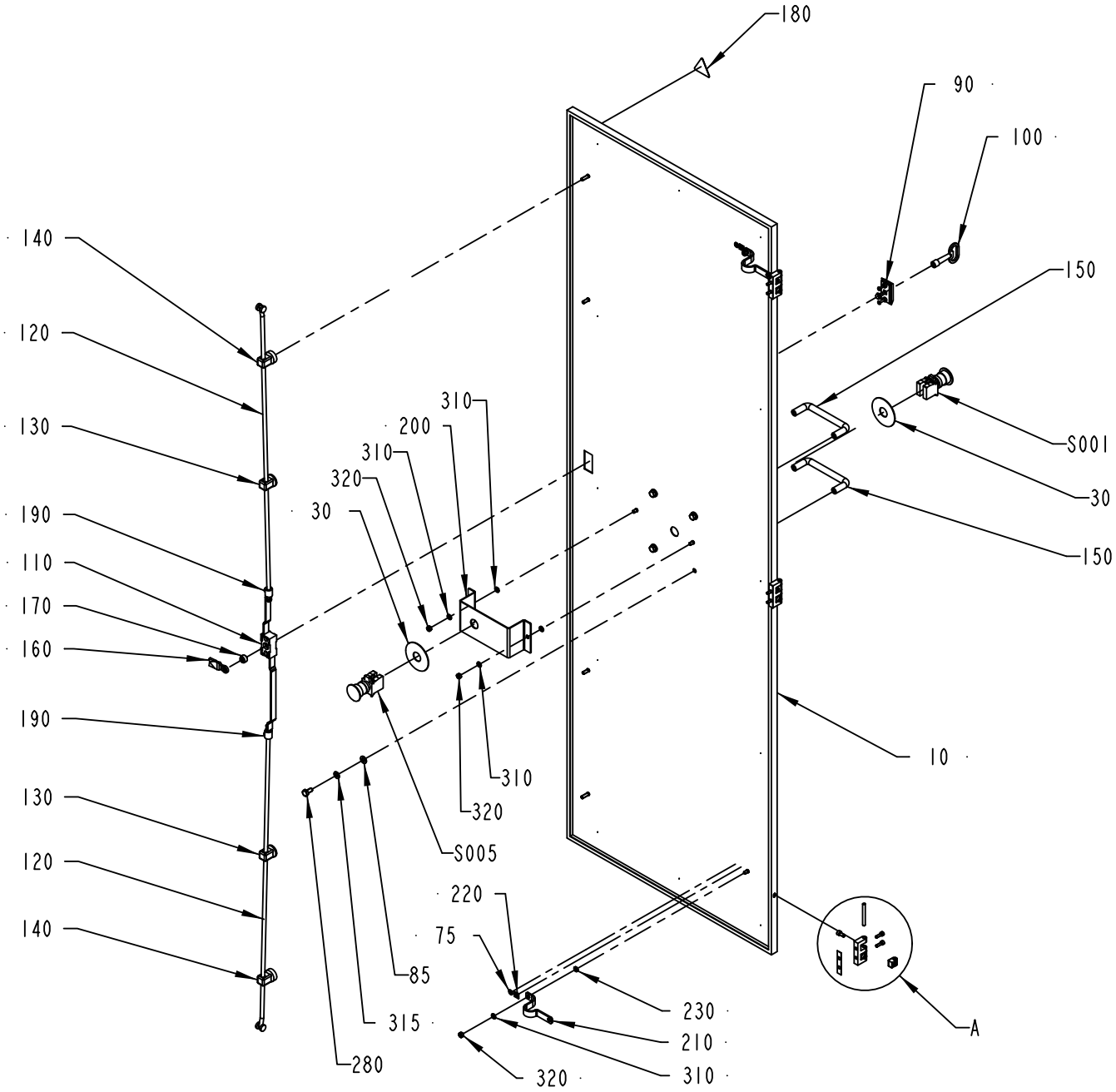

DETAIL A
SCALE 1:2

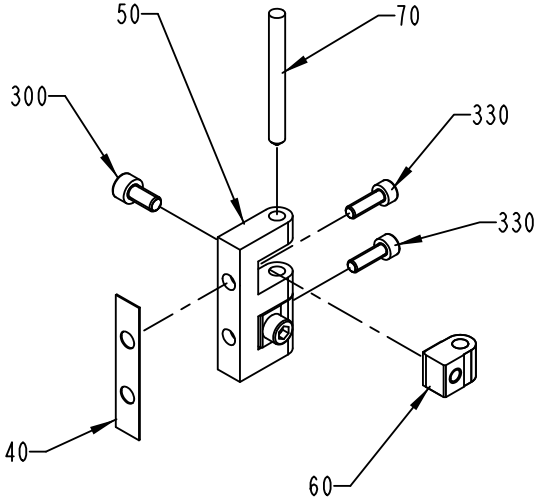

1532935-1
ECM 132638

ECM: 385729 - 20090402
Group number: 1532935-0100
Assembly Drawing: 1532935-1_1_AB

Pos	Part No	UN	Qty	Description	Page No
-					
010	1532936-0000		1	DOOR	
030	486826-0001		2	SIGN "EMERGENCY STOP"	
040	988666-0000		3	GASKET	
050	1035792-0000		3	E-HINGE	
060	1129770-0000		6	BLOCKING PIECE	
070	988685-0000		3	PIN	
075	2608177-0000		2	SIGN	
085	90005-0077		4	WASHER PL.RND.NYL.8,4/7, H=2	
090	90237-0160		1	ESCUTCHEON WITH SQUARE, 1121-U23/U13	
100	90237-0324		1	KEY, 1104-02 FOR SQUARE 8 MM	
110	90237-0153		1	LOCK HOUSING, 1121-U26-0B	
120	90237-0168		2	ROUND BAR WITH END WHEEL, 1049-U5	
130	90237-0151		2	GUIDE, 1001-U11	
140	90237-0152		2	GUIDE, 1001-U12	
150	90017-0016		2	HANDLE, NO. 14.4012.02.120	
160	90237-0156		1	LOCK BOLT, 1000-16	
170	90237-0155		1	LOCK ADAPTER, 1121-U40	
180	359705-0015		1	WARNING SIGN ISO, RISK OF ELECTRIC SHOCK	
190	90237-0169		2	LOCK ADAPTER, 1000-U49	
200	1038699-0000		1	BRACKET	
210	90135-0035		2	EARTH WIRE, L=250 MM 16 MM2	
220	90194-0152		2	SIGN, EARTH	
230	90062-0015		2	LOCK WASHER SERRAT.EXT.GEAR,6,4/11 H=0,7	
280	312105-0449		4	SCREW M6S ISO 4017 M8X16 A480	
300	312115-0366		6	SCREW ISO4762 M6X12 A4 80	
310	315105-0153		6	WASHER BRB 6,4X12 RFR	
315	315105-0165		4	WASHER BRB 8,4X16 RFR	
320	312605-0316		4	HEXAGON NUT, M6M M6 A280	
330	312115-0329		6	SCREW ISO4762 M5X16 A4 80	
S001	90458-1651		1	EMERGENCY STOP, ZB4-BS-844 ZB4-BZ-104	
S005	90458-1651		1	EMERGENCY STOP, ZB4-BS-844 ZB4-BZ-104	

Pos	Part No	UN	Qty	Description	Page No

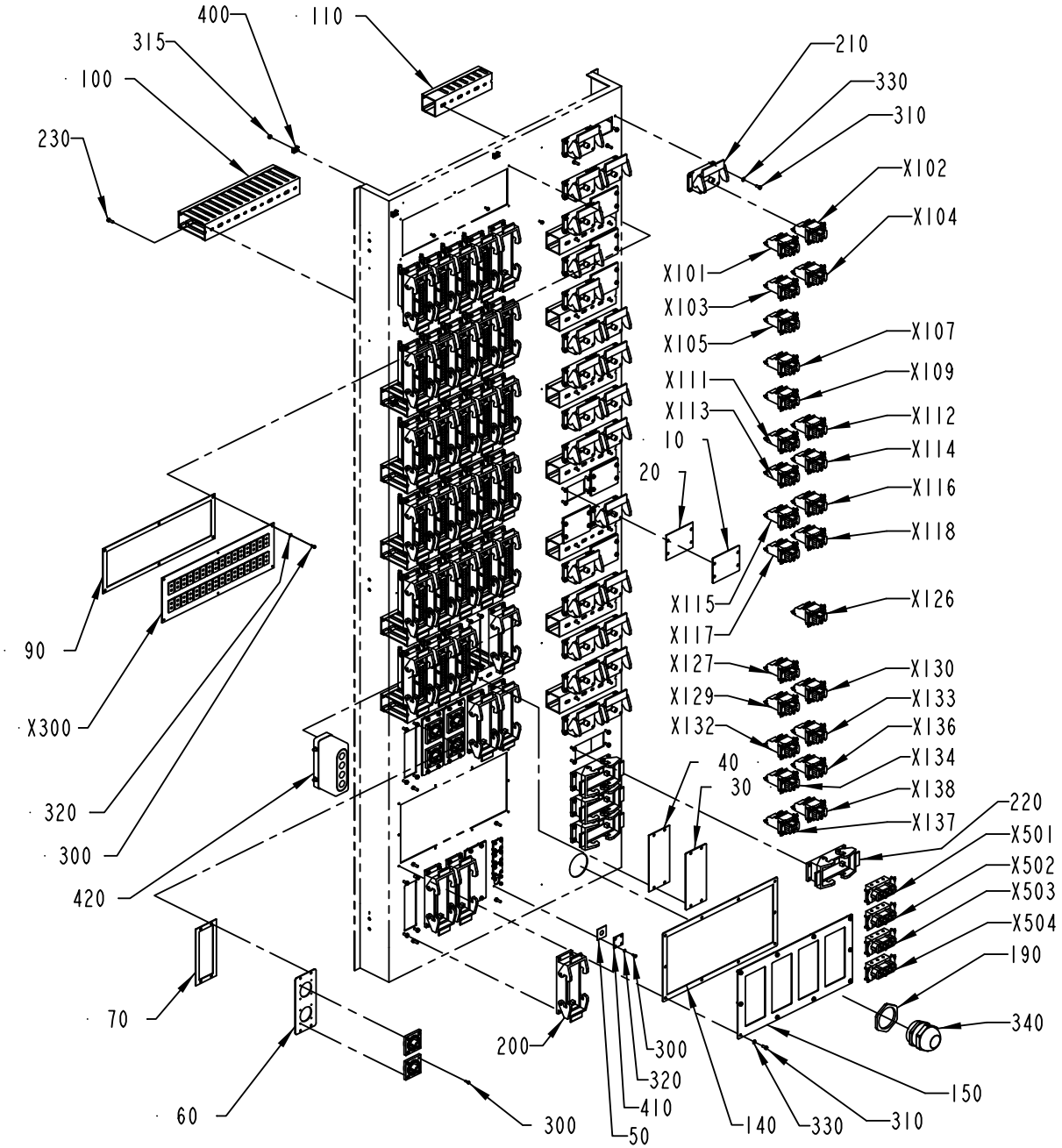
400
110
315
100
230
210
330
310
X102
X104
X101
X103
X105
X107
X109
X111
X113
X112
10
X114
20
X116
X118
X115
X117
X126
90
X300
320
300
420
X127
X129
X132
X130
X133
X136
X134
X138
X137
40
30
220
X501
X502
X503
X504
190
340
150
70
60
200
300
320
410
50
140
330
310

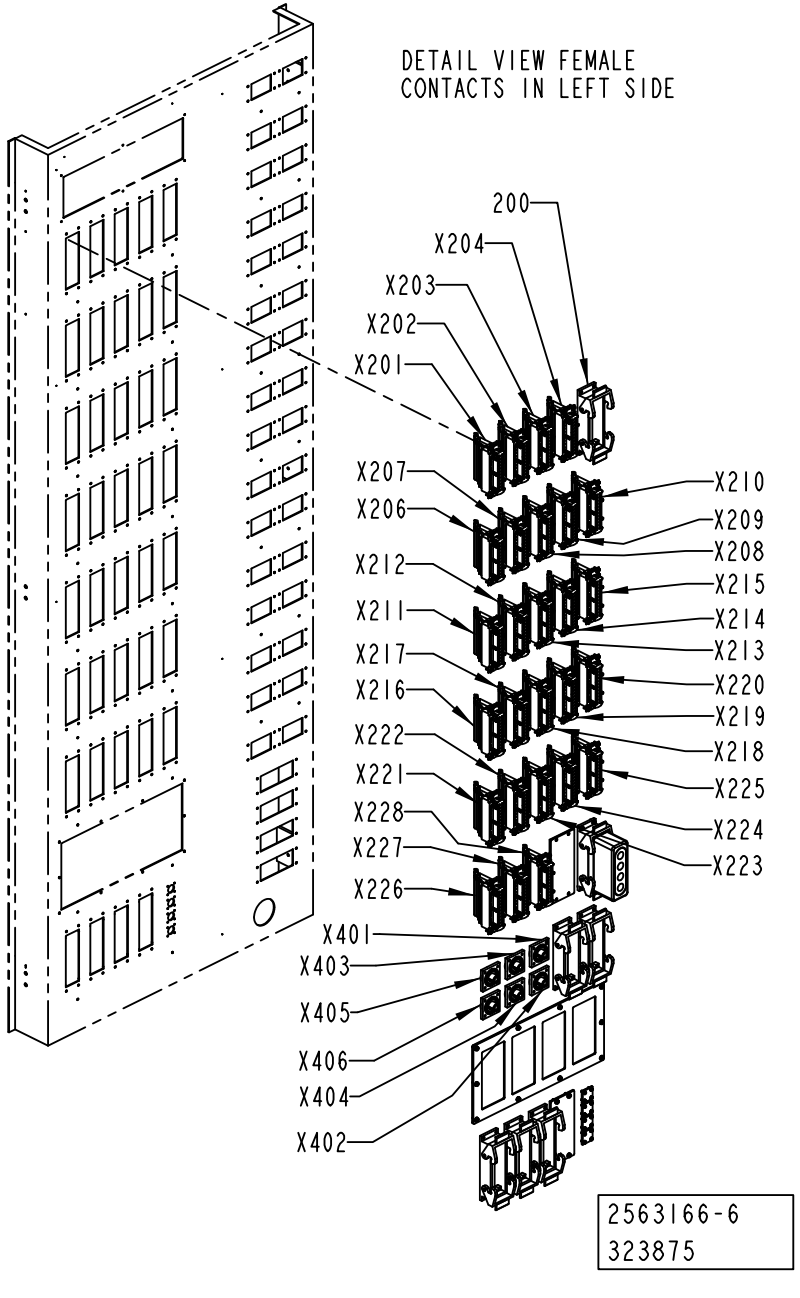
DETAIL VIEW FEMALE
CONTACTS IN LEFT SIDE
200
X204
X203
X202
X201
X207
X206
X212
X211
X217
X216
X222
X221
X228
X227
X226
X401
X403
X405
X406
X404
X402
X210
X209
X208
X215
X214
X213
X220
X219
X218
X225
X224
X223
2563166-6
323875

ECM: 380945 - 20090401
Group number: 2563166-0250
Assembly Drawing: 2563166-6_1_AC

This list covers pages from 9-70 to 9-73

Pos	Part No	UN	Qty	Description	Page No
A3/FLEX					
010	1037572-0000		7	COVER PLATE	
020	1037573-0000		7	GASKET	
030	1037574-0000		2	COVER PLATE	
040	1037575-0000		2	GASKET	
050	1129276-0000		4	GASKET	
060	1129549-0000		3	SHEET	
100	2551988-0000		6	CABLE DUCT	
140	2841498-0000		1	GASKET	
150	2841499-0000		1	PLATE	
200	90459-6639		34	HOUSING 24B BULKHEAD, 09 30 024 0301	
210	90110-0123		25	HOUSING, 09 30 006 0301	
220	90459-6638		4	HOUSING 16B BULKHEAD, 09 30 016 0301	
300	312125-0222		46	SCREW ISO 1207 M3X8 A4	
310	312125-0289		312	SCREW ISO 1207 M4X10 A4	
320	315105-0124		22	WASHER BRB 3,2X6 RFR	
330	315105-0136		312	WASHER BRB 4,3X8 RFR	
410	1548139-0000		4	COVER PLATE	
420	90110-0381		1	COVER, 310601-33 CYR24.4	
460	2889865-0000		4	GASKET	
W106	90220-0183	MM	3200	SCR. CABLE 2X0,34MM2	
W118	90220-0183	MM	3700	SCR. CABLE 2X0,34MM2	
W119	90220-0183	MM	3100	SCR. CABLE 2X0,34MM2	
W120	90220-0183	MM	3500	SCR. CABLE 2X0,34MM2	
W121	90220-0183	MM	3500	SCR. CABLE 2X0,34MM2	
W122	90220-0183	MM	3600	SCR. CABLE 2X0,34MM2	
W123	90220-0183	MM	3500	SCR. CABLE 2X0,34MM2	
W124	90220-0183	MM	2400	SCR. CABLE 2X0,34MM2	
W125	90220-0183	MM	2400	SCR. CABLE 2X0,34MM2	
W126	90220-0183	MM	2200	SCR. CABLE 2X0,34MM2	
W127	90220-0183	MM	2200	SCR. CABLE 2X0,34MM2	
W130	90220-0183	MM	2700	SCR. CABLE 2X0,34MM2	
W133	90220-0183	MM	3500	SCR. CABLE 2X0,34MM2	
W135	90220-0183	MM	2100	SCR. CABLE 2X0,34MM2	
W137	90220-0183	MM	3000	SCR. CABLE 2X0,34MM2	
W138	90220-0183	MM	2500	SCR. CABLE 2X0,34MM2	
W139	90220-0183	MM	2400	SCR. CABLE 2X0,34MM2	
W210	90220-0104	MM	1050	SCR. CABLE 4X1,5MM2	
W211	90220-0104	MM	1000	SCR. CABLE 4X1,5MM2	
W212	90220-0104	MM	1000	SCR. CABLE 4X1,5MM2	
W213	90220-0104	MM	1150	SCR. CABLE 4X1,5MM2	
W214	90220-0104	MM	1950	SCR. CABLE 4X1,5MM2	
W215	90220-0104	MM	1200	SCR. CABLE 4X1,5MM2	
W2708	90220-0107	MM	4800	SCR. CABLE 5X0,75MM2	
W2709	90220-0107	MM	5800	SCR. CABLE 5X0,75MM2	
W300	90220-0034	MM	1200	THERMOCABLE TEX/SITW-20F-KX 2X0,5MM2	
W301	90220-0034	MM	1200	THERMOCABLE TEX/SITW-20F-KX 2X0,5MM2	
W302	90220-0034	MM	1200	THERMOCABLE TEX/SITW-20F-KX 2X0,5MM2	
W303	90220-0034	MM	1200	THERMOCABLE TEX/SITW-20F-KX 2X0,5MM2	
W304	90220-0034	MM	1200	THERMOCABLE TEX/SITW-20F-KX 2X0,5MM2	
W305	90220-0034	MM	1200	THERMOCABLE TEX/SITW-20F-KX 2X0,5MM2	
W306	90220-0034	MM	1200	THERMOCABLE TEX/SITW-20F-KX 2X0,5MM2	
W307	90220-0034	MM	2200	THERMOCABLE TEX/SITW-20F-KX 2X0,5MM2	
W308	90220-0034	MM	1200	THERMOCABLE TEX/SITW-20F-KX 2X0,5MM2	
W309	90220-0034	MM	1200	THERMOCABLE TEX/SITW-20F-KX 2X0,5MM2	
W310	90220-0034	MM	1200	THERMOCABLE TEX/SITW-20F-KX 2X0,5MM2	
W312	90220-0034	MM	1200	THERMOCABLE TEX/SITW-20F-KX 2X0,5MM2	
W313	90220-0034	MM	1200	THERMOCABLE TEX/SITW-20F-KX 2X0,5MM2	
W314	90220-0034	MM	1200	THERMOCABLE TEX/SITW-20F-KX 2X0,5MM2	
W315	90220-0034	MM	1200	THERMOCABLE TEX/SITW-20F-KX 2X0,5MM2	
W316	90220-0034	MM	1200	THERMOCABLE TEX/SITW-20F-KX 2X0,5MM2	
W317	90220-0034	MM	1200	THERMOCABLE TEX/SITW-20F-KX 2X0,5MM2	
W318	90220-0034	MM	1000	THERMOCABLE TEX/SITW-20F-KX 2X0,5MM2	
W319	90220-0034	MM	1000	THERMOCABLE TEX/SITW-20F-KX 2X0,5MM2	
W320	90220-0034	MM	1000	THERMOCABLE TEX/SITW-20F-KX 2X0,5MM2	
W321	90220-0034	MM	3000	THERMOCABLE TEX/SITW-20F-KX 2X0,5MM2	
W322	90220-0034	MM	3000	THERMOCABLE TEX/SITW-20F-KX 2X0,5MM2	
W323	90220-0034	MM	3000	THERMOCABLE TEX/SITW-20F-KX 2X0,5MM2	
W331	90220-0034	MM	1000	THERMOCABLE TEX/SITW-20F-KX 2X0,5MM2	
W332	90220-0034	MM	1000	THERMOCABLE TEX/SITW-20F-KX 2X0,5MM2	
W333	90220-0034	MM	1000	THERMOCABLE TEX/SITW-20F-KX 2X0,5MM2	
W382	90220-0034	MM	3000	THERMOCABLE TEX/SITW-20F-KX 2X0,5MM2	
W903	90459-2530	MM	1500	DEVICENET CABLE THIN	
W910	90459-2530	MM	950	DEVICENET CABLE THIN	
X104	90459-6624		1	FEMALE INSERT HAN E AV, 09 33 006 4735	
X105	90459-6624		1	FEMALE INSERT HAN E AV, 09 33 006 4735	
X109	90459-6624		1	FEMALE INSERT HAN E AV, 09 33 006 4735	
X113	90459-6624		1	FEMALE INSERT HAN E AV, 09 33 006 4735	
X114	90459-6624		1	FEMALE INSERT HAN E AV, 09 33 006 4735	
X136	90459-6624		1	FEMALE INSERT HAN E AV, 09 33 006 4735	
X201	90459-6627		1	FEMALE INSERT HAN E AV, 09 33 024 4735	
X202	90459-6627		1	FEMALE INSERT HAN E AV, 09 33 024 4735	
X204	90459-6627		1	FEMALE INSERT HAN E AV, 09 33 024 4735	
X208	90459-6627		1	FEMALE INSERT HAN E AV, 09 33 024 4735	

Machine Type | Group Description | Used-In | Group Number | Page No

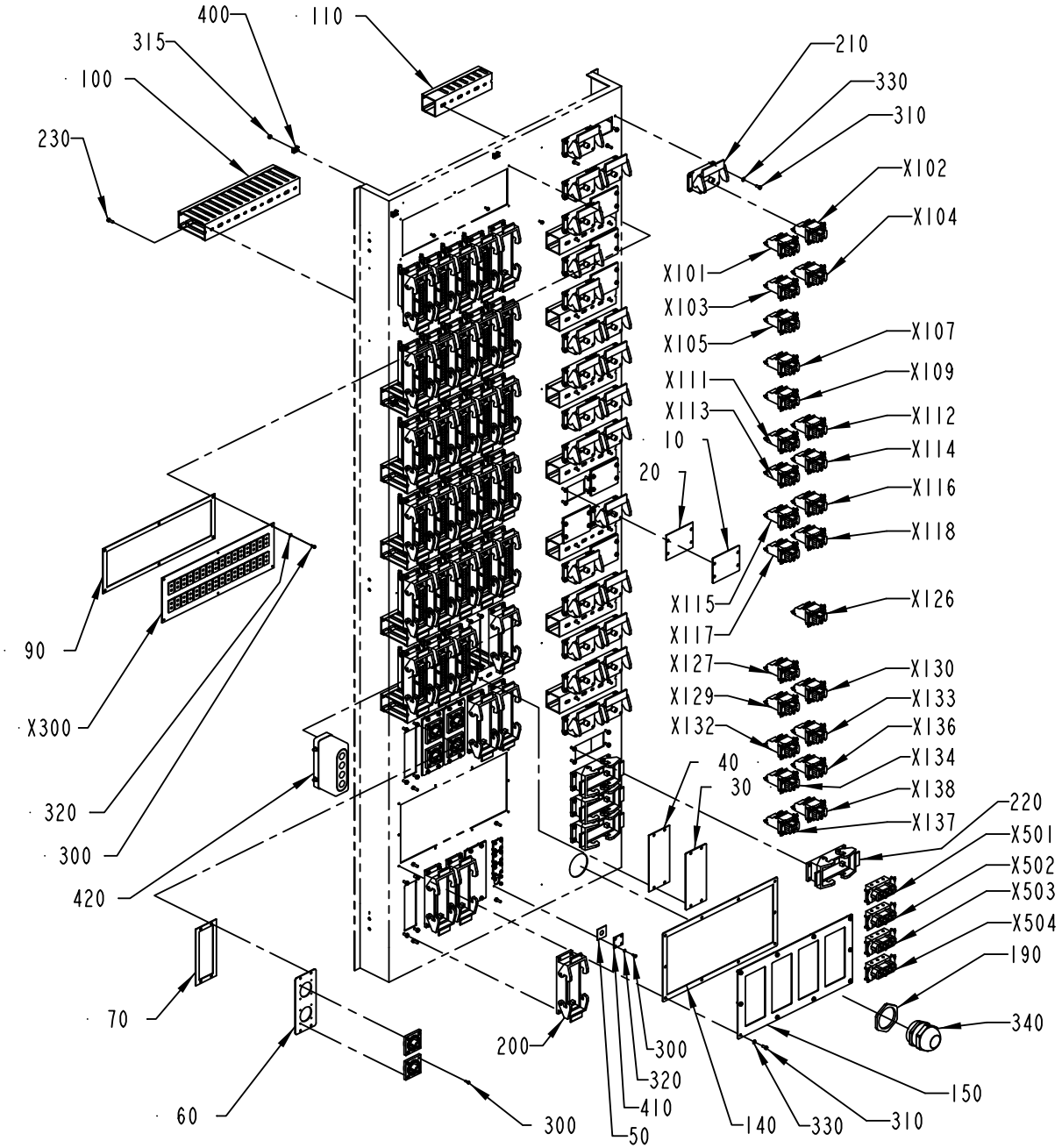
400
110
315
100
230
210
330
310
X102
X104
X101
X103
X105
X107
X109
X111
X113
X112
10
X114
20
X116
X118
X115
X117
X126
90
X300
320
300
420
X127
X129
X132
X130
X133
X136
X134
X138
X137
40
30
220
X501
X502
X503
X504
190
340
150
70
60
200
300
320
410
50
140
330
310

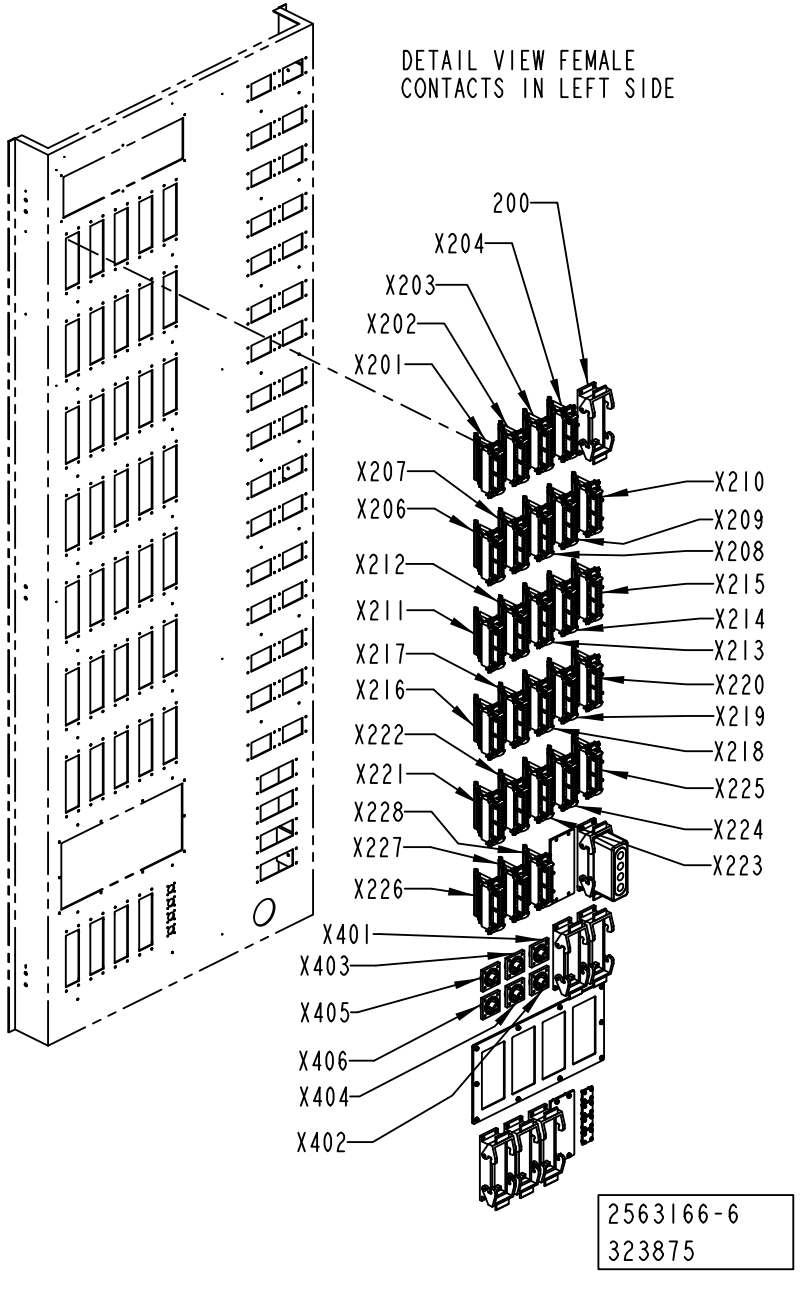
DETAIL VIEW FEMALE
CONTACTS IN LEFT SIDE
200
X204
X203
X202
X201
X207
X206
X212
X211
X217
X216
X222
X221
X228
X227
X226
X401
X403
X405
X406
X404
X402
X210
X209
X208
X215
X214
X213
X220
X219
X218
X225
X224
X223
2563166-6
323875

ECM: 380945 - 20090401
Group number: 2563166-0250
Assembly Drawing: 2563166-6_1_AC

This list covers pages from 9-70 to 9-73

Pos	Part No	UN	Qty	Description	Page No
A3/FLEX (Cont'd)					
X209	90459-6627		1	FEMALE INSERT HAN E AV, 09 33 024 4735	
X210	90459-6627		1	FEMALE INSERT HAN E AV, 09 33 024 4735	
X403	90110-0236		1	CHASSIS CONTACT PX0767/S	
X404	90110-0236		1	CHASSIS CONTACT PX0767/S	
X405	90110-0236		1	CHASSIS CONTACT PX0767/S	
X406	90110-0236		1	CHASSIS CONTACT PX0767/S	
X501	90110-0055		1	FEMALE INSERT HAN 6 HSB 09 31 006 2701	
X502	90110-0055		1	FEMALE INSERT HAN 6 HSB 09 31 006 2701	
Common Parts					
070	1129550-0000		3	GASKET	
090	2539532-0000		1	GASKET	
110	2551989-0000		8	CABLE DUCT	
190	353250-0050		1	GLAND, LOCK NUT M50X1,5	
230	90287-0124		34	SCREW PAN HEAD MSCS M4X12 NYLON	
315	312605-0312		4	HEXAGON NUT, M6M M4 A280	
340	90458-0311		1	CABLE GLAND, M50X1,5, NO.5311 1060	
400	352113-0205		4	ANCHOR PLATES FOR STRIPS, TYPE TM2S8-C10	
X101	90459-6624		1	FEMALE INSERT HAN E AV, 09 33 006 4735	
X102	90459-6624		1	FEMALE INSERT HAN E AV, 09 33 006 4735	
X103	90459-6624		1	FEMALE INSERT HAN E AV, 09 33 006 4735	
X107	90459-6624		1	FEMALE INSERT HAN E AV, 09 33 006 4735	
X111	90459-6624		1	FEMALE INSERT HAN E AV, 09 33 006 4735	
X112	90459-6624		1	FEMALE INSERT HAN E AV, 09 33 006 4735	
X115	90459-6624		1	FEMALE INSERT HAN E AV, 09 33 006 4735	
X116	90459-6624		1	FEMALE INSERT HAN E AV, 09 33 006 4735	
X117	90459-6624		1	FEMALE INSERT HAN E AV, 09 33 006 4735	
X118	90459-6624		1	FEMALE INSERT HAN E AV, 09 33 006 4735	
X126	90459-6624		1	FEMALE INSERT HAN E AV, 09 33 006 4735	
X127	90459-6624		1	FEMALE INSERT HAN E AV, 09 33 006 4735	
X129	90459-6624		1	FEMALE INSERT HAN E AV, 09 33 006 4735	
X130	90459-6624		1	FEMALE INSERT HAN E AV, 09 33 006 4735	
X132	90459-6624		1	FEMALE INSERT HAN E AV, 09 33 006 4735	
X133	90459-6624		1	FEMALE INSERT HAN E AV, 09 33 006 4735	
X134	90459-6624		1	FEMALE INSERT HAN E AV, 09 33 006 4735	
X137	90459-6624		1	FEMALE INSERT HAN E AV, 09 33 006 4735	
X138	90459-6624		1	FEMALE INSERT HAN E AV, 09 33 006 4735	
X203	90459-6627		1	FEMALE INSERT HAN E AV, 09 33 024 4735	
X206	90459-6627		1	FEMALE INSERT HAN E AV, 09 33 024 4735	
X207	90459-6627		1	FEMALE INSERT HAN E AV, 09 33 024 4735	
X211	90459-6627		1	FEMALE INSERT HAN E AV, 09 33 024 4735	
X212	90459-6627		1	FEMALE INSERT HAN E AV, 09 33 024 4735	
X213	90459-6627		1	FEMALE INSERT HAN E AV, 09 33 024 4735	
X214	90459-6627		1	FEMALE INSERT HAN E AV, 09 33 024 4735	
X215	90459-6627		1	FEMALE INSERT HAN E AV, 09 33 024 4735	
X216	90459-6627		1	FEMALE INSERT HAN E AV, 09 33 024 4735	
X217	90459-6627		1	FEMALE INSERT HAN E AV, 09 33 024 4735	
X218	90459-6627		1	FEMALE INSERT HAN E AV, 09 33 024 4735	
X219	90459-6627		1	FEMALE INSERT HAN E AV, 09 33 024 4735	
X220	90459-6627		1	FEMALE INSERT HAN E AV, 09 33 024 4735	
X221	90459-6627		1	FEMALE INSERT HAN E AV, 09 33 024 4735	
X222	90459-6627		1	FEMALE INSERT HAN E AV, 09 33 024 4735	
X223	90459-6627		1	FEMALE INSERT HAN E AV, 09 33 024 4735	
X224	90459-6627		1	FEMALE INSERT HAN E AV, 09 33 024 4735	
X225	90459-6627		1	FEMALE INSERT HAN E AV, 09 33 024 4735	
X226	90459-6627		1	FEMALE INSERT HAN E AV, 09 33 024 4735	
X227	90459-6627		1	FEMALE INSERT HAN E AV, 09 33 024 4735	
X228	90459-6627		1	FEMALE INSERT HAN E AV, 09 33 024 4735	
X300	90459-0835		1	THERMO CONTACT PANEL, 16 CONTACTS 2 ROWS	
X401	90110-0236		1	CHASSIS CONTACT PX0767/S	
X402	90110-0236		1	CHASSIS CONTACT PX0767/S	
X503	90110-0055		1	FEMALE INSERT HAN 6 HSB 09 31 006 2701	
X504	90110-0055		1	FEMALE INSERT HAN 6 HSB 09 31 006 2701	

Machine Type | Group Description | Used-In | Group Number | Page No

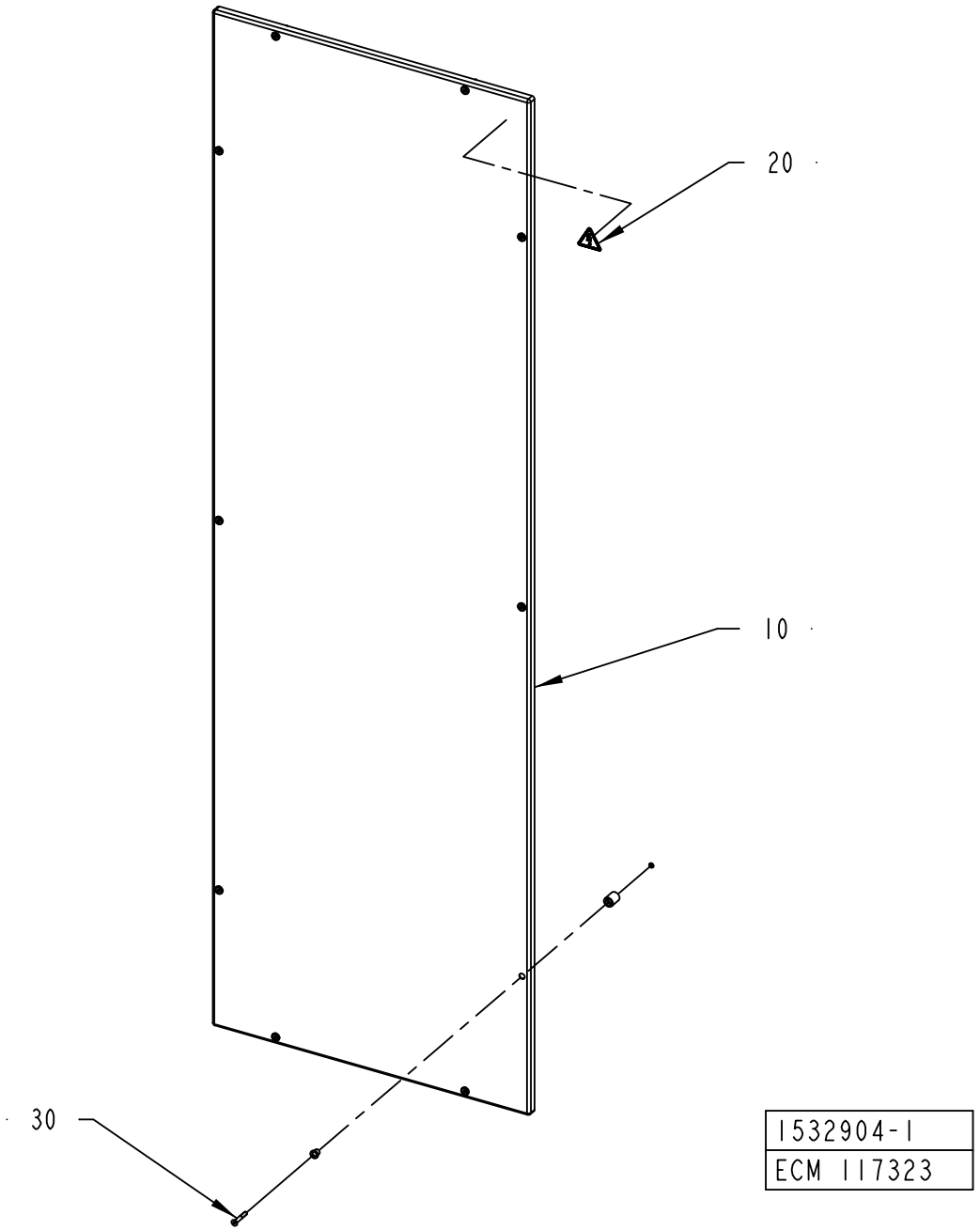
20
10
30
1532904-1
ECM 117323

ECM: 385726 - 20090402
Group number: 1532904-0100
Assembly Drawing: 1532904-1_1_AA

Pos	Part No	UN	Qty	Description	Page No
-					
010	1532905-0000		1	PLATE	
020	359705-0015		1	WARNING SIGN ISO, RISK OF ELECTRIC SHOCK	
030	90226-0458		10	MOUNTING SCREW	

Pos	Part No	UN	Qty	Description	Page No

CONTROL BOARD LEFT

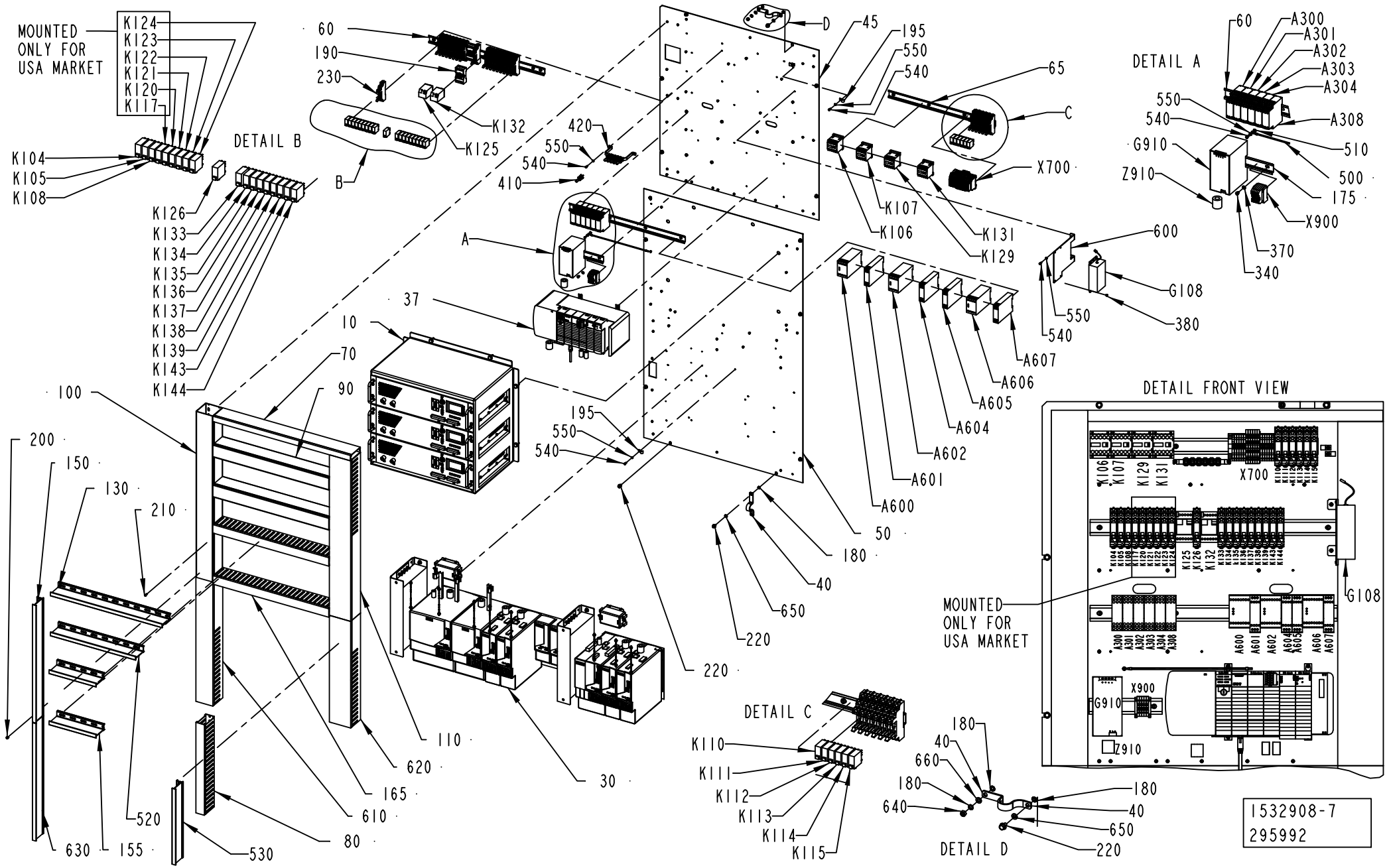

ECM: 389359 - 20090701
Group number: 1532908-0250
Assembly Drawing: 1532908-7_1_AD

This list covers pages from 9-76 to 9-85

Pos	Part No	UN	Qty	Description	Page No
A3/FLEX OTHER COUNTRIES TGA (See drawing on pages: 9-76, 9-78, 9-80, 9-82, 9-84)					
010	2533651-0100		1	IH EQUIPMENT	**9-87**
030	2841133-0100		1	MOTOR DRIVE CONTROL	**9-89, 9-91**
037	2841132-0100		1	PLC	**9-93**
040	90135-0035		2	EARTH WIRE, L=250 MM 16 MM2	
045	2844056-0000		1	MOUNTING PLATE	
050	2844057-0000		1	MOUNTING PLATE	
065	2895705-0000		1	RAIL	
070	2841125-0000		1	CABLE DUCT	
080	2895702-0000		1	CABLE DUCT	
100	2892585-0000		1	CABLE DUCT	
110	2841130-0000		1	CABLE DUCT	
130	2550133-0000		1	DIVIDER	
150	2895703-0000		1	DIVIDER	
175	2841497-0000		1	RAIL	
180	90062-0022		4	LOCK WASHER D=6,4/11	
190	90129-0006		2	BASE, S3-B	
195	90165-0007		3	PIPE CLIP FOR TUBE D=8 MM	
200	90181-0064		20	LOCK ZP1 FOR CHANNEL T1	
210	90287-0124		66	SCREW PAN HEAD MSCS M4X12 NYLON	
230	90129-0018		19	BASE, P2RF-08-E	
340	312121-0321		13	SCREW ISO 1207 M5X6 4.8-5.8 Z.PL.	
370	315101-0146		13	WASHER PLAIN, BRB, 5,3/10 H=1	
410	90600-1200		6	SCREEN CLAMPING SADDLE, 790-108	
420	90600-1201		1	BUSBAR U-SHAPED, 790-191	
500	1512322-0000		1	COPPER BRAID	
510	90062-0059		1	LOCK WASKER SERRAT.EXT.GEAR,4,3/8 H=0,5	
520	2850662-0000		1	DIVIDER	
530	2850663-0000		1	DIVIDER	
540	312121-0289		8	SCREW ISO 1207 M4X10 4.8-5.8 Z.PL.	
550	315101-0136		8	WASHER BRB, 4,3/8 H=0,8	
600	2826649-0000		1	BRACKET	
610	2894090-0000		1	CABLE DUCT	
620	2894091-0000		1	CABLE DUCT	
630	2895704-0000		1	DIVIDER	
640	312605-0316		1	HEXAGON NUT, M6M M6 A280	
650	315101-0153		2	WASHER PLAIN, BRB, 6,4/12 H=1,5	
660	315105-0153		1	WASHER BRB 6,4X12 RFR	
A300	90458-2580		1	LEVEL CONTROL RELAY, RM4-LA32M	
A302	90458-2580		1	LEVEL CONTROL RELAY, RM4-LA32M	
A600	90119-0072		1	SAFETY RELAY, JSBR4	
A601	90600-1454		1	SAFETY TIME RELAY, E1T-1.0S-24VDC	
A602	90119-0072		1	SAFETY RELAY, JSBR4	
A605	90457-0092		1	SAFETY RELAY RT9-24VDC	
A606	90119-0089		1	SAFETY RELAY, JSBT4 24VDC	
A607	90457-0092		1	SAFETY RELAY RT9-24VDC	
G910	90459-5886		1	POWER SUPPLY UNIT 115-230 VAC/24VDC100W	
K104	90119-0108		1	RELAY OMRON G2R-2-SNI-24DC	
	90129-0018		*1*	*BASE, P2RF-08-E*	
K105	90119-0108		1	RELAY OMRON G2R-2-SNI-24DC	
	90129-0018		*1*	*BASE, P2RF-08-E*	
K106	90075-0141		1	CONTACTOR, 4KW 24VDC	
K107	90075-0141		1	CONTACTOR, 4KW 24VDC	
K110	90119-0108		1	RELAY OMRON G2R-2-SNI-24DC	
	90129-0018		*1*	*BASE, P2RF-08-E*	
K111	90119-0108		1	RELAY OMRON G2R-2-SNI-24DC	
	90129-0018		*1*	*BASE, P2RF-08-E*	
K112	90119-0108		1	RELAY OMRON G2R-2-SNI-24DC	
	90129-0018		*1*	*BASE, P2RF-08-E*	
K113	90119-0108		1	RELAY OMRON G2R-2-SNI-24DC	
	90129-0018		*1*	*BASE, P2RF-08-E*	
K114	90119-0108		1	RELAY OMRON G2R-2-SNI-24DC	
	90129-0018		*1*	*BASE, P2RF-08-E*	
K115	90119-0108		1	RELAY OMRON G2R-2-SNI-24DC	
	90129-0018		*1*	*BASE, P2RF-08-E*	
K129	90075-0141		1	CONTACTOR, 4KW 24VDC	
K131	90075-0141		1	CONTACTOR, 4KW 24VDC	
K134	90119-0108		1	RELAY OMRON G2R-2-SNI-24DC	
	90129-0018		*1*	*BASE, P2RF-08-E*	
K135	90119-0108		1	RELAY OMRON G2R-2-SNI-24DC	
	90129-0018		*1*	*BASE, P2RF-08-E*	
K136	90119-0108		1	RELAY OMRON G2R-2-SNI-24DC	
	90129-0018		*1*	*BASE, P2RF-08-E*	
K137	90119-0108		1	RELAY OMRON G2R-2-SNI-24DC	
	90129-0018		*1*	*BASE, P2RF-08-E*	
K138	90119-0108		1	RELAY OMRON G2R-2-SNI-24DC	
	90129-0018		*1*	*BASE, P2RF-08-E*	
K139	90119-0108		1	RELAY OMRON G2R-2-SNI-24DC	
	90129-0018		*1*	*BASE, P2RF-08-E*	
K144	90119-0108		1	RELAY OMRON G2R-2-SNI-24DC	
	90129-0018		*1*	*BASE, P2RF-08-E*	
X700	2841532-0100		1	PLINTH	**9-95**
X900	90459-2519		1	OPEN STYLE TAP	
Z910	90600-5249		1	FERRITE, B64290L616X38	

Machine Type | Group Description | Used-In | Group Number | Page No

CONTROL BOARD LEFT

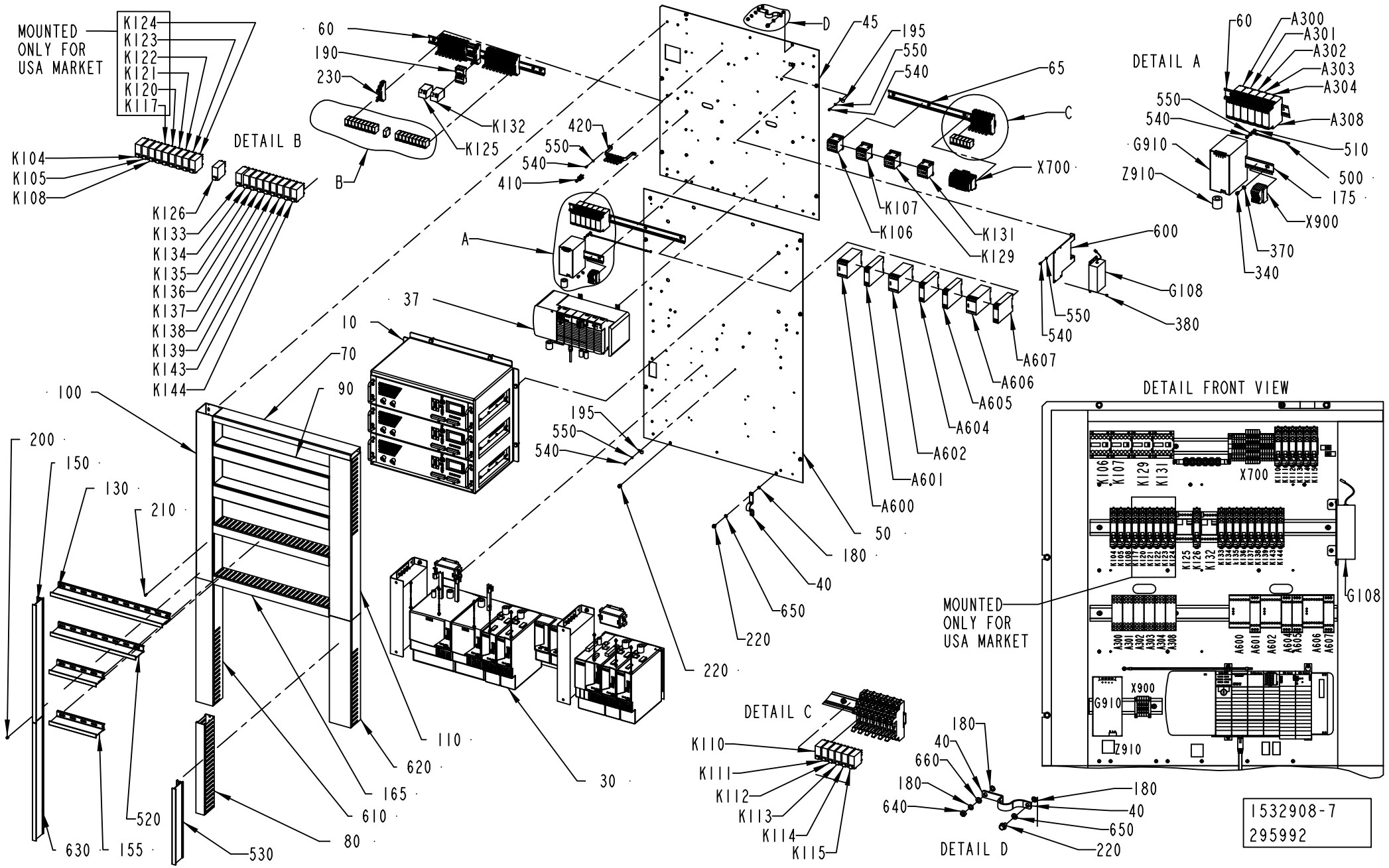

ECM: 389359 - 20090701
Group number: 1532908-0250
Assembly Drawing: 1532908-7_1_AD

This list covers pages from 9-76 to 9-85

Pos	Part No	UN	Qty	Description	Page No
A3/FLEX OTHER COUNTRIES TPA, A3/FLEX OTHER COUNTRIES TBA (Cont'd) (See drawing on pages: 9-76, 9-78, 9-80, 9-82, 9-84)					
010	2533651-0100		1	IH EQUIPMENT	**9-87**
030	2841133-0100		1	MOTOR DRIVE CONTROL	**9-89, 9-91**
037	2841132-0100		1	PLC	**9-93**
040	90135-0035		2	EARTH WIRE, L=250 MM 16 MM2	
045	2844056-0000		1	MOUNTING PLATE	
050	2844057-0000		1	MOUNTING PLATE	
065	2895705-0000		1	RAIL	
070	2841125-0000		1	CABLE DUCT	
080	2895702-0000		1	CABLE DUCT	
100	2892585-0000		1	CABLE DUCT	
110	2841130-0000		1	CABLE DUCT	
130	2550133-0000		1	DIVIDER	
150	2895703-0000		1	DIVIDER	
175	2841497-0000		1	RAIL	
180	90062-0022		4	LOCK WASHER D=6,4/11	
190	90129-0006		2	BASE, S3-B	
195	90165-0007		3	PIPE CLIP FOR TUBE D=8 MM	
200	90181-0064		20	LOCK ZP1 FOR CHANNEL T1	
210	90287-0124		66	SCREW PAN HEAD MSCS M4X12 NYLON	
230	90129-0018		19	BASE, P2RF-08-E	
340	312121-0321		13	SCREW ISO 1207 M5X6 4.8-5.8 Z.PL.	
370	315101-0146		13	WASHER PLAIN, BRB, 5,3/10 H=1	
410	90600-1200		6	SCREEN CLAMPING SADDLE, 790-108	
420	90600-1201		1	BUSBAR U-SHAPED, 790-191	
500	1512322-0000		1	COPPER BRAID	
510	90062-0059		1	LOCK WASKER SERRAT.EXT.GEAR,4,3/8 H=0,5	
520	2850662-0000		1	DIVIDER	
530	2850663-0000		1	DIVIDER	
540	312121-0289		8	SCREW ISO 1207 M4X10 4.8-5.8 Z.PL.	
550	315101-0136		8	WASHER BRB, 4,3/8 H=0,8	
600	2826649-0000		1	BRACKET	
610	2894090-0000		1	CABLE DUCT	
620	2894091-0000		1	CABLE DUCT	
630	2895704-0000		1	DIVIDER	
640	312605-0316		1	HEXAGON NUT, M6M M6 A280	
650	315101-0153		2	WASHER PLAIN, BRB, 6,4/12 H=1,5	
660	315105-0153		1	WASHER BRB 6,4X12 RFR	
A300	90458-2580		1	LEVEL CONTROL RELAY, RM4-LA32M	
A302	90458-2580		1	LEVEL CONTROL RELAY, RM4-LA32M	
A600	90119-0072		1	SAFETY RELAY, JSBR4	
A601	90600-1454		1	SAFETY TIME RELAY, E1T-1.0S-24VDC	
A602	90119-0072		1	SAFETY RELAY, JSBR4	
A605	90457-0092		1	SAFETY RELAY RT9-24VDC	
A606	90119-0089		1	SAFETY RELAY, JSBT4 24VDC	
A607	90457-0092		1	SAFETY RELAY RT9-24VDC	
G910	90459-5886		1	POWER SUPPLY UNIT 115-230 VAC/24VDC100W	
K104	90119-0108		1	RELAY OMRON G2R-2-SNI-24DC	
	90129-0018		*1*	*BASE, P2RF-08-E*	
K105	90119-0108		1	RELAY OMRON G2R-2-SNI-24DC	
	90129-0018		*1*	*BASE, P2RF-08-E*	
K106	90075-0141		1	CONTACTOR, 4KW 24VDC	
K107	90075-0141		1	CONTACTOR, 4KW 24VDC	
K110	90119-0108		1	RELAY OMRON G2R-2-SNI-24DC	
	90129-0018		*1*	*BASE, P2RF-08-E*	
K111	90119-0108		1	RELAY OMRON G2R-2-SNI-24DC	
	90129-0018		*1*	*BASE, P2RF-08-E*	
K112	90119-0108		1	RELAY OMRON G2R-2-SNI-24DC	
	90129-0018		*1*	*BASE, P2RF-08-E*	
K113	90119-0108		1	RELAY OMRON G2R-2-SNI-24DC	
	90129-0018		*1*	*BASE, P2RF-08-E*	
K114	90119-0108		1	RELAY OMRON G2R-2-SNI-24DC	
	90129-0018		*1*	*BASE, P2RF-08-E*	
K115	90119-0108		1	RELAY OMRON G2R-2-SNI-24DC	
	90129-0018		*1*	*BASE, P2RF-08-E*	
K129	90075-0141		1	CONTACTOR, 4KW 24VDC	
K131	90075-0141		1	CONTACTOR, 4KW 24VDC	
K134	90119-0108		1	RELAY OMRON G2R-2-SNI-24DC	
	90129-0018		*1*	*BASE, P2RF-08-E*	
K135	90119-0108		1	RELAY OMRON G2R-2-SNI-24DC	
	90129-0018		*1*	*BASE, P2RF-08-E*	
K136	90119-0108		1	RELAY OMRON G2R-2-SNI-24DC	
	90129-0018		*1*	*BASE, P2RF-08-E*	
K137	90119-0108		1	RELAY OMRON G2R-2-SNI-24DC	
	90129-0018		*1*	*BASE, P2RF-08-E*	
K138	90119-0108		1	RELAY OMRON G2R-2-SNI-24DC	
	90129-0018		*1*	*BASE, P2RF-08-E*	
K139	90119-0108		1	RELAY OMRON G2R-2-SNI-24DC	
	90129-0018		*1*	*BASE, P2RF-08-E*	
K144	90119-0108		1	RELAY OMRON G2R-2-SNI-24DC	
	90129-0018		*1*	*BASE, P2RF-08-E*	
X700	2841532-0100		1	PLINTH	**9-95**
X900	90459-2519		1	OPEN STYLE TAP	

Machine Type | Group Description | Used-In | Group Number | Page No

CONTROL BOARD LEFT

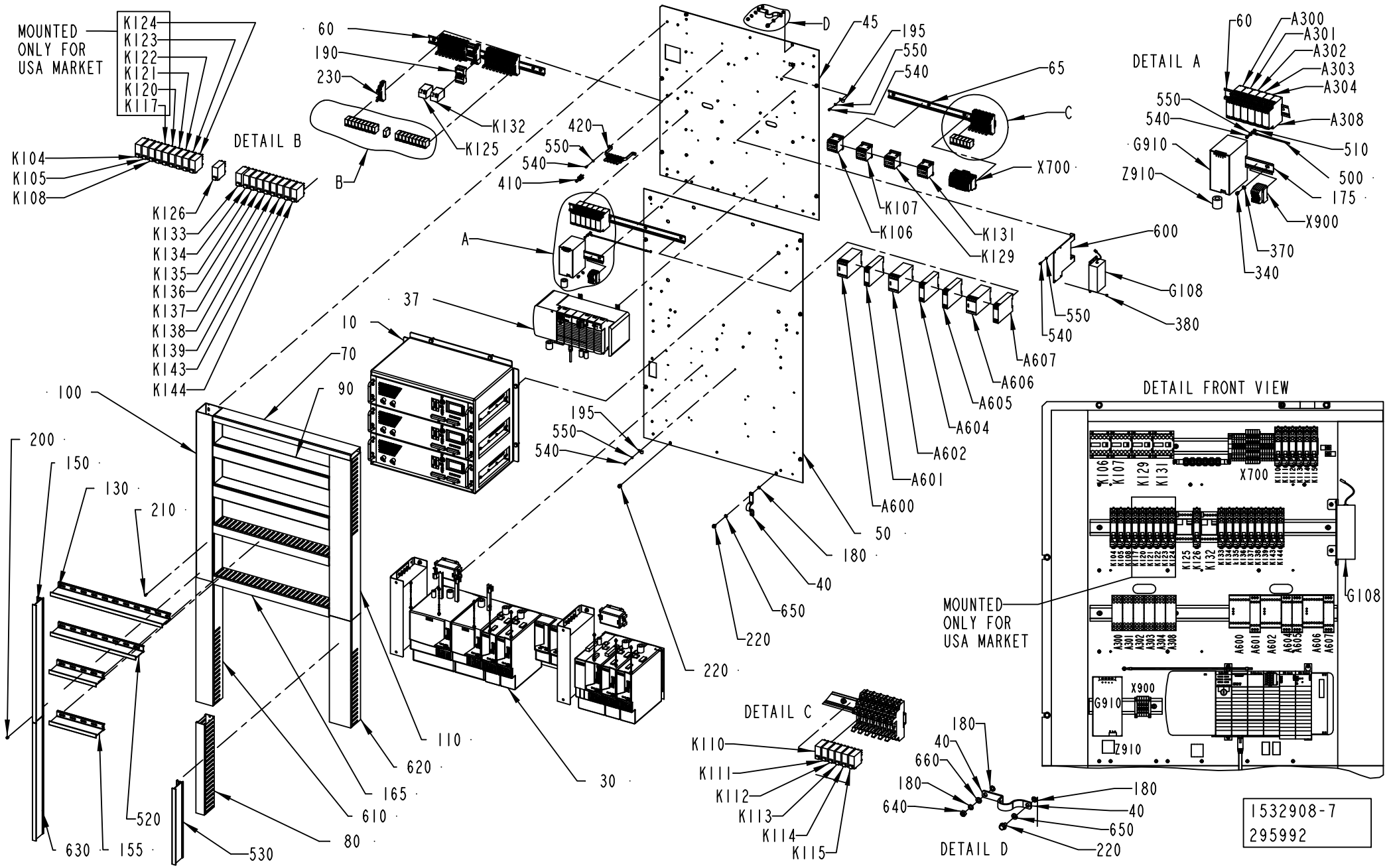

Pos	Part No	UN	Qty	Description	Page No
A3/FLEX OTHER COUNTRIES TPA, A3/FLEX OTHER COUNTRIES TBA (Cont'd) (See drawing on pages: 9-76, 9-78, 9-80, 9-82, 9-84)					
Z910	90600-5249		1	FERRITE, B64290L616X38	
A3/FLEX USA TBA, A3/FLEX USA TPA (See drawing on pages: 9-76, 9-78, 9-80, 9-82, 9-84)					
010	2533651-0100		1	IH EQUIPMENT	**9-87**
030	2841133-0100		1	MOTOR DRIVE CONTROL	**9-89, 9-91**
037	2841132-0100		1	PLC	**9-93**
040	90135-0035		2	EARTH WIRE, L=250 MM 16 MM2	
045	2844056-0000		1	MOUNTING PLATE	
050	2844057-0000		1	MOUNTING PLATE	
065	2895705-0000		1	RAIL	
070	2841125-0000		1	CABLE DUCT	
080	2895702-0000		1	CABLE DUCT	
100	2892585-0000		1	CABLE DUCT	
110	2841130-0000		1	CABLE DUCT	
130	2550133-0000		1	DIVIDER	
150	2895703-0000		1	DIVIDER	
175	2841497-0000		1	RAIL	
180	90062-0022		4	LOCK WASHER D=6,4/11	
190	90129-0006		2	BASE, S3-B	
195	90165-0007		3	PIPE CLIP FOR TUBE D=8 MM	
200	90181-0064		20	LOCK ZP1 FOR CHANNEL T1	
210	90287-0124		66	SCREW PAN HEAD MSCS M4X12 NYLON	
230	90129-0018		25	BASE, P2RF-08-E	
340	312121-0321		13	SCREW ISO 1207 M5X6 4.8-5.8 Z.PL.	
370	315101-0146		13	WASHER PLAIN, BRB, 5,3/10 H=1	
410	90600-1200		6	SCREEN CLAMPING SADDLE, 790-108	
420	90600-1201		1	BUSBAR U-SHAPED, 790-191	
500	1512322-0000		1	COPPER BRAID	
510	90062-0059		1	LOCK WASKER SERRAT.EXT.GEAR,4,3/8 H=0,5	
520	2850662-0000		1	DIVIDER	
530	2850663-0000		1	DIVIDER	
540	312121-0289		8	SCREW ISO 1207 M4X10 4.8-5.8 Z.PL.	
550	315101-0136		8	WASHER BRB, 4,3/8 H=0,8	
600	2826649-0000		1	BRACKET	
610	2894090-0000		1	CABLE DUCT	
620	2894091-0000		1	CABLE DUCT	
630	2895704-0000		1	DIVIDER	
640	312605-0316		1	HEXAGON NUT, M6M M6 A280	
650	315101-0153		2	WASHER PLAIN, BRB, 6,4/12 H=1,5	
660	315105-0153		1	WASHER BRB 6,4X12 RFR	
A300	90458-2580		1	LEVEL CONTROL RELAY, RM4-LA32M	
A302	90458-2580		1	LEVEL CONTROL RELAY, RM4-LA32M	
A600	90119-0072		1	SAFETY RELAY, JSBR4	
A601	90600-1454		1	SAFETY TIME RELAY, E1T-1.0S-24VDC	
A602	90119-0072		1	SAFETY RELAY, JSBR4	
A605	90457-0092		1	SAFETY RELAY RT9-24VDC	
A606	90119-0089		1	SAFETY RELAY, JSBT4 24VDC	
A607	90457-0092		1	SAFETY RELAY RT9-24VDC	
G910	90459-5886		1	POWER SUPPLY UNIT 115-230 VAC/24VDC100W	
K104	90119-0108		1	RELAY OMRON G2R-2-SNI-24DC	
	90129-0018		*1*	*BASE, P2RF-08-E*	
K105	90119-0108		1	RELAY OMRON G2R-2-SNI-24DC	
	90129-0018		*1*	*BASE, P2RF-08-E*	
K106	90075-0141		1	CONTACTOR, 4KW 24VDC	
K107	90075-0141		1	CONTACTOR, 4KW 24VDC	
K110	90119-0108		1	RELAY OMRON G2R-2-SNI-24DC	
	90129-0018		*1*	*BASE, P2RF-08-E*	
K111	90119-0108		1	RELAY OMRON G2R-2-SNI-24DC	
	90129-0018		*1*	*BASE, P2RF-08-E*	
K112	90119-0108		1	RELAY OMRON G2R-2-SNI-24DC	
	90129-0018		*1*	*BASE, P2RF-08-E*	
K113	90119-0108		1	RELAY OMRON G2R-2-SNI-24DC	
	90129-0018		*1*	*BASE, P2RF-08-E*	
K114	90119-0108		1	RELAY OMRON G2R-2-SNI-24DC	
	90129-0018		*1*	*BASE, P2RF-08-E*	
K115	90119-0108		1	RELAY OMRON G2R-2-SNI-24DC	
	90129-0018		*1*	*BASE, P2RF-08-E*	
K117	90119-0108		1	RELAY OMRON G2R-2-SNI-24DC	
	90129-0018		*1*	*BASE, P2RF-08-E*	
K120	90119-0108		1	RELAY OMRON G2R-2-SNI-24DC	
	90129-0018		*1*	*BASE, P2RF-08-E*	
K121	90119-0108		1	RELAY OMRON G2R-2-SNI-24DC	
	90129-0018		*1*	*BASE, P2RF-08-E*	
K122	90119-0108		1	RELAY OMRON G2R-2-SNI-24DC	
	90129-0018		*1*	*BASE, P2RF-08-E*	
K123	90119-0108		1	RELAY OMRON G2R-2-SNI-24DC	
	90129-0018		*1*	*BASE, P2RF-08-E*	
K124	90119-0108		1	RELAY OMRON G2R-2-SNI-24DC	
	90129-0018		*1*	*BASE, P2RF-08-E*	
K129	90075-0141		1	CONTACTOR, 4KW 24VDC	
K131	90075-0141		1	CONTACTOR, 4KW 24VDC	
K134	90119-0108		1	RELAY OMRON G2R-2-SNI-24DC	
	90129-0018		*1*	*BASE, P2RF-08-E*	

Machine Type | Group Description | Used-In | Group Number | Page No

CONTROL BOARD LEFT

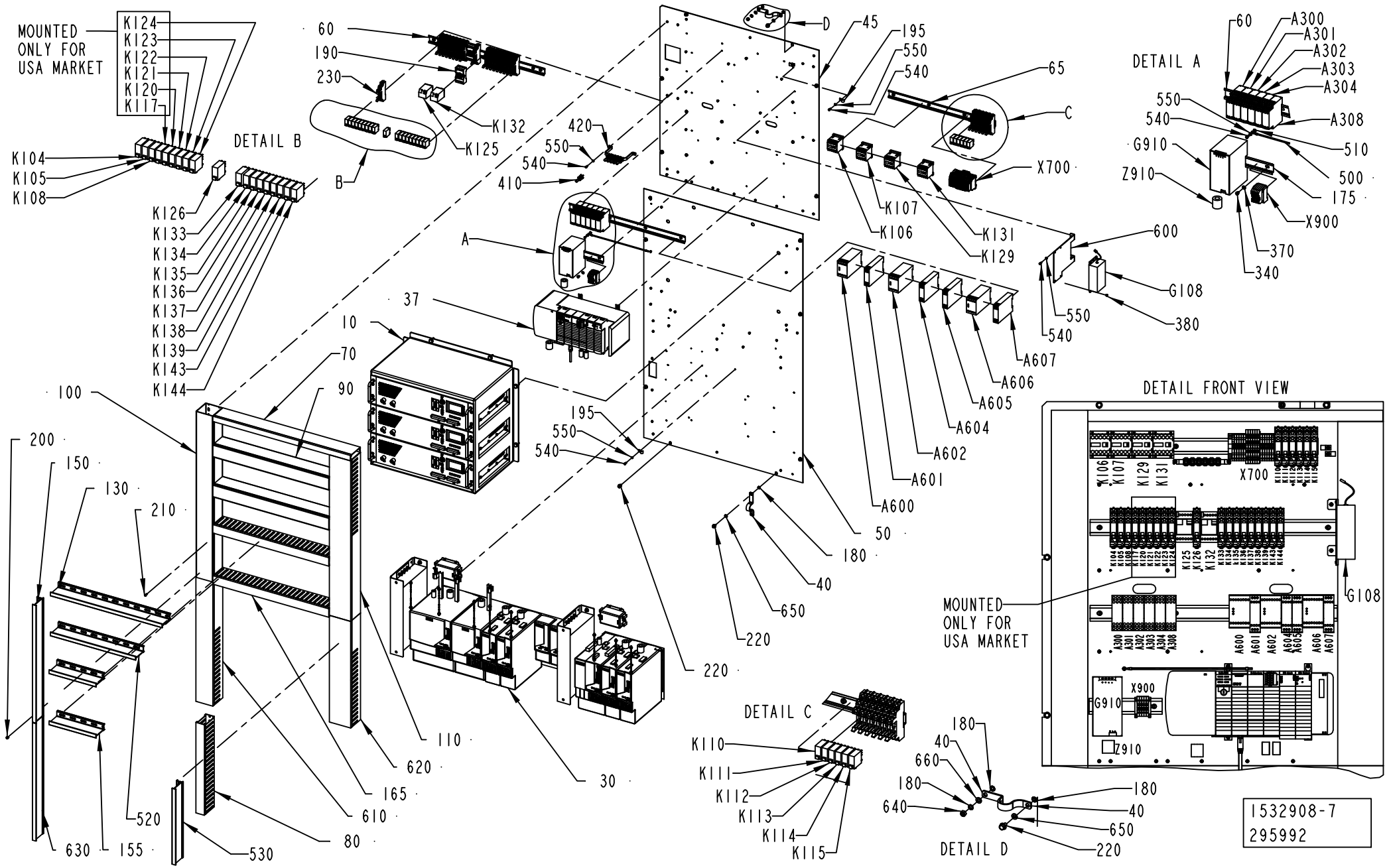

Pos	Part No	UN	Qty	Description	Page No
A3/FLEX USA TBA, A3/FLEX USA TPA (Cont'd) (See drawing on pages: 9-76, 9-78, 9-80, 9-82, 9-84)					
K135	90119-0108		1	RELAY OMRON G2R-2-SNI-24DC	
	90129-0018		*1*	*BASE, P2RF-08-E*	
K136	90119-0108		1	RELAY OMRON G2R-2-SNI-24DC	
	90129-0018		*1*	*BASE, P2RF-08-E*	
K137	90119-0108		1	RELAY OMRON G2R-2-SNI-24DC	
	90129-0018		*1*	*BASE, P2RF-08-E*	
K138	90119-0108		1	RELAY OMRON G2R-2-SNI-24DC	
	90129-0018		*1*	*BASE, P2RF-08-E*	
K139	90119-0108		1	RELAY OMRON G2R-2-SNI-24DC	
	90129-0018		*1*	*BASE, P2RF-08-E*	
K144	90119-0108		1	RELAY OMRON G2R-2-SNI-24DC	
	90129-0018		*1*	*BASE, P2RF-08-E*	
X700	2841532-0100		1	PLINTH	**9-95**
X900	90459-2519		1	OPEN STYLE TAP	
Z910	90600-5249		1	FERRITE, B64290L616X38	
A3/FLEX USA TGA (See drawing on pages: 9-76, 9-78, 9-80, 9-82, 9-84)					
010	2533651-0100		1	IH EQUIPMENT	**9-87**
030	2841133-0100		1	MOTOR DRIVE CONTROL	**9-89, 9-91**
037	2841132-0100		1	PLC	**9-93**
040	90135-0035		2	EARTH WIRE, L=250 MM 16 MM2	
045	2844056-0000		1	MOUNTING PLATE	
050	2844057-0000		1	MOUNTING PLATE	
065	2895705-0000		1	RAIL	
070	2841125-0000		1	CABLE DUCT	
080	2895702-0000		1	CABLE DUCT	
100	2892585-0000		1	CABLE DUCT	
110	2841130-0000		1	CABLE DUCT	
130	2550133-0000		1	DIVIDER	
150	2895703-0000		1	DIVIDER	
175	2841497-0000		1	RAIL	
180	90062-0022		4	LOCK WASHER D=6,4/11	
190	90129-0006		2	BASE, S3-B	
195	90165-0007		3	PIPE CLIP FOR TUBE D=8 MM	
200	90181-0064		20	LOCK ZP1 FOR CHANNEL T1	
210	90287-0124		66	SCREW PAN HEAD MSCS M4X12 NYLON	
230	90129-0018		25	BASE, P2RF-08-E	
340	312121-0321		13	SCREW ISO 1207 M5X6 4.8-5.8 Z.PL.	
370	315101-0146		13	WASHER PLAIN, BRB, 5,3/10 H=1	
410	90600-1200		6	SCREEN CLAMPING SADDLE, 790-108	
420	90600-1201		1	BUSBAR U-SHAPED, 790-191	
500	1512322-0000		1	COPPER BRAID	
510	90062-0059		1	LOCK WASKER SERRAT.EXT.GEAR,4,3/8 H=0,5	
520	2850662-0000		1	DIVIDER	
530	2850663-0000		1	DIVIDER	
540	312121-0289		8	SCREW ISO 1207 M4X10 4.8-5.8 Z.PL.	
550	315101-0136		8	WASHER BRB, 4,3/8 H=0,8	
600	2826649-0000		1	BRACKET	
610	2894090-0000		1	CABLE DUCT	
620	2894091-0000		1	CABLE DUCT	
630	2895704-0000		1	DIVIDER	
640	312605-0316		1	HEXAGON NUT, M6M M6 A280	
650	315101-0153		2	WASHER PLAIN, BRB, 6,4/12 H=1,5	
660	315105-0153		1	WASHER BRB 6,4X12 RFR	
A300	90458-2580		1	LEVEL CONTROL RELAY, RM4-LA32M	
A302	90458-2580		1	LEVEL CONTROL RELAY, RM4-LA32M	
A600	90119-0072		1	SAFETY RELAY, JSBR4	
A601	90600-1454		1	SAFETY TIME RELAY, E1T-1.0S-24VDC	
A602	90119-0072		1	SAFETY RELAY, JSBR4	
A605	90457-0092		1	SAFETY RELAY RT9-24VDC	
A606	90119-0089		1	SAFETY RELAY, JSBT4 24VDC	
A607	90457-0092		1	SAFETY RELAY RT9-24VDC	
G910	90459-5886		1	POWER SUPPLY UNIT 115-230 VAC/24VDC100W	
K104	90119-0108		1	RELAY OMRON G2R-2-SNI-24DC	
	90129-0018		*1*	*BASE, P2RF-08-E*	
K105	90119-0108		1	RELAY OMRON G2R-2-SNI-24DC	
	90129-0018		*1*	*BASE, P2RF-08-E*	
K106	90075-0141		1	CONTACTOR, 4KW 24VDC	
K107	90075-0141		1	CONTACTOR, 4KW 24VDC	
K110	90119-0108		1	RELAY OMRON G2R-2-SNI-24DC	
	90129-0018		*1*	*BASE, P2RF-08-E*	
K111	90119-0108		1	RELAY OMRON G2R-2-SNI-24DC	
	90129-0018		*1*	*BASE, P2RF-08-E*	
K112	90119-0108		1	RELAY OMRON G2R-2-SNI-24DC	
	90129-0018		*1*	*BASE, P2RF-08-E*	
K113	90119-0108		1	RELAY OMRON G2R-2-SNI-24DC	
	90129-0018		*1*	*BASE, P2RF-08-E*	
K114	90119-0108		1	RELAY OMRON G2R-2-SNI-24DC	
	90129-0018		*1*	*BASE, P2RF-08-E*	
K115	90119-0108		1	RELAY OMRON G2R-2-SNI-24DC	
	90129-0018		*1*	*BASE, P2RF-08-E*	
K117	90119-0108		1	RELAY OMRON G2R-2-SNI-24DC	
	90129-0018		*1*	*BASE, P2RF-08-E*	
K120	90119-0108		1	RELAY OMRON G2R-2-SNI-24DC	

Machine Type | Group Description | Used-In | Group Number | Page No

CONTROL BOARD LEFT

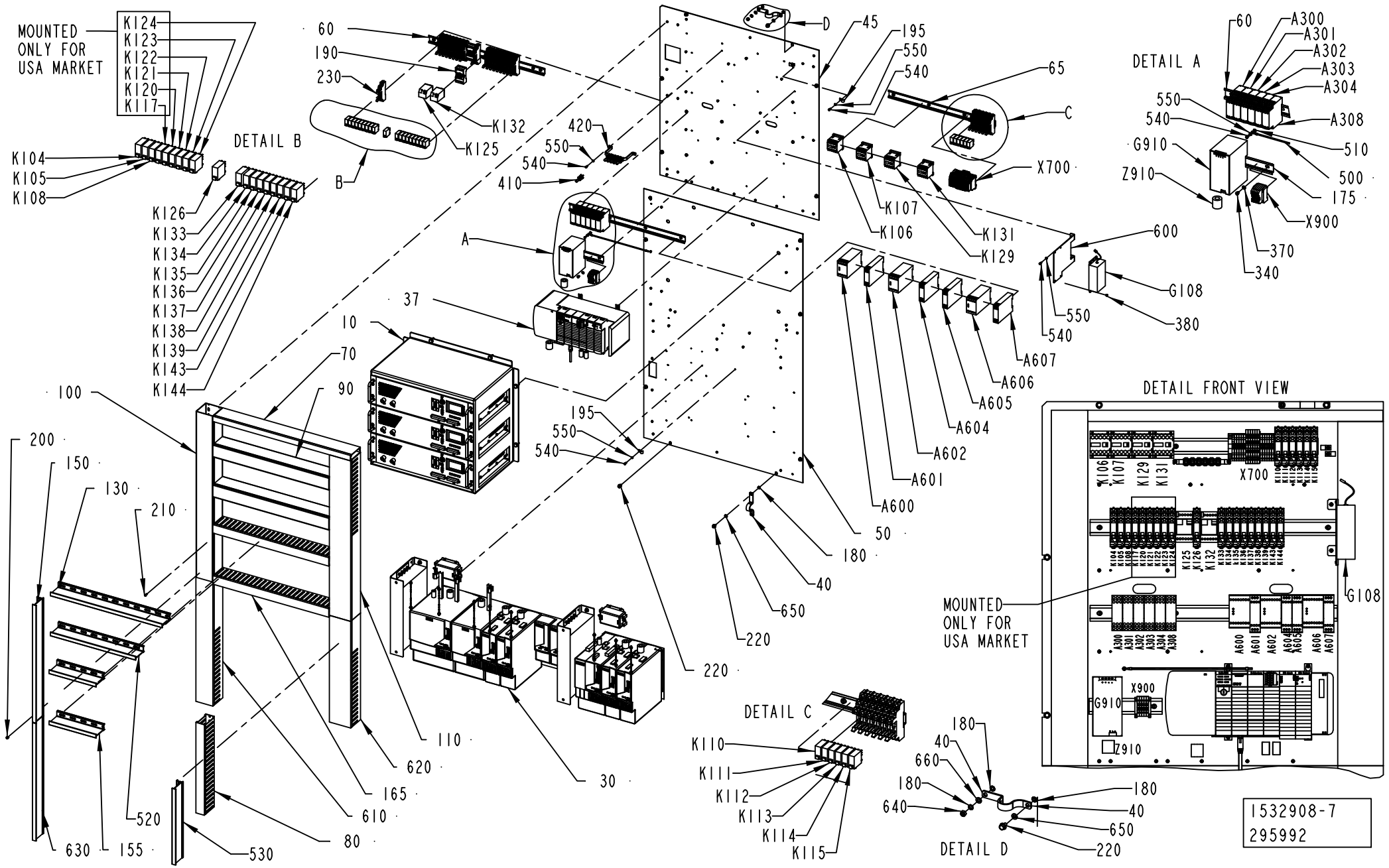

Pos	Part No	UN	Qty	Description	Page No
A3/FLEX USA TGA (Cont'd) (See drawing on pages: 9-76, 9-78, 9-80, 9-82, 9-84)					
K121	90119-0108		1	RELAY OMRON G2R-2-SNI-24DC	
	90129-0018		*1*	*BASE, P2RF-08-E*	
K122	90119-0108		1	RELAY OMRON G2R-2-SNI-24DC	
	90129-0018		*1*	*BASE, P2RF-08-E*	
K123	90119-0108		1	RELAY OMRON G2R-2-SNI-24DC	
	90129-0018		*1*	*BASE, P2RF-08-E*	
K124	90119-0108		1	RELAY OMRON G2R-2-SNI-24DC	
	90129-0018		*1*	*BASE, P2RF-08-E*	
K129	90075-0141		1	CONTACTOR, 4KW 24VDC	
K131	90075-0141		1	CONTACTOR, 4KW 24VDC	
K134	90119-0108		1	RELAY OMRON G2R-2-SNI-24DC	
	90129-0018		*1*	*BASE, P2RF-08-E*	
K135	90119-0108		1	RELAY OMRON G2R-2-SNI-24DC	
	90129-0018		*1*	*BASE, P2RF-08-E*	
K136	90119-0108		1	RELAY OMRON G2R-2-SNI-24DC	
	90129-0018		*1*	*BASE, P2RF-08-E*	
K137	90119-0108		1	RELAY OMRON G2R-2-SNI-24DC	
	90129-0018		*1*	*BASE, P2RF-08-E*	
K138	90119-0108		1	RELAY OMRON G2R-2-SNI-24DC	
	90129-0018		*1*	*BASE, P2RF-08-E*	
K139	90119-0108		1	RELAY OMRON G2R-2-SNI-24DC	
	90129-0018		*1*	*BASE, P2RF-08-E*	
K144	90119-0108		1	RELAY OMRON G2R-2-SNI-24DC	
	90129-0018		*1*	*BASE, P2RF-08-E*	
X700	2841532-0100		1	PLINTH	**9-95**
X900	90459-2519		1	OPEN STYLE TAP	
Z910	90600-5249		1	FERRITE, B64290L616X38	
Common Parts					
060	2550126-0000		2	RAIL	
090	2550129-0000		2	CABLE DUCT	
155	2557591-0000		2	DIVIDER	
165	2675519-0000		2	CABLE DUCT	
220	90287-0157		13	SCREW M6SF FLAT HEAD M6X10 88	
380	312145-0285		4	SCREW ISO 2009 MFS M4X6 A4	
A301	90458-2580		1	LEVEL CONTROL RELAY, RM4-LA32M	
A303	90458-2580		1	LEVEL CONTROL RELAY, RM4-LA32M	
A304	90458-2580		1	LEVEL CONTROL RELAY, RM4-LA32M	
A308	90458-2580		1	LEVEL CONTROL RELAY, RM4-LA32M	
A604	90457-0092		1	SAFETY RELAY RT9-24VDC	
G108	90459-7198		1	AUXILIARY BATTERY MODULE, IC693ACC302	
K108	90119-0108		1	RELAY OMRON G2R-2-SNI-24DC	
	90129-0018		*1*	*BASE, P2RF-08-E*	
K125	90119-0056		1	RELAY, AUXILIARY MK3P5-S 24VDC	
K126	90119-0108		1	RELAY OMRON G2R-2-SNI-24DC	
	90129-0018		*1*	*BASE, P2RF-08-E*	
K132	90119-0056		1	RELAY, AUXILIARY MK3P5-S 24VDC	
K133	90119-0108		1	RELAY OMRON G2R-2-SNI-24DC	
	90129-0018		*1*	*BASE, P2RF-08-E*	
K143	90119-0108		1	RELAY OMRON G2R-2-SNI-24DC	
	90129-0018		*1*	*BASE, P2RF-08-E*	

Machine Type	Group Description	Used-In	Group Number	Page No

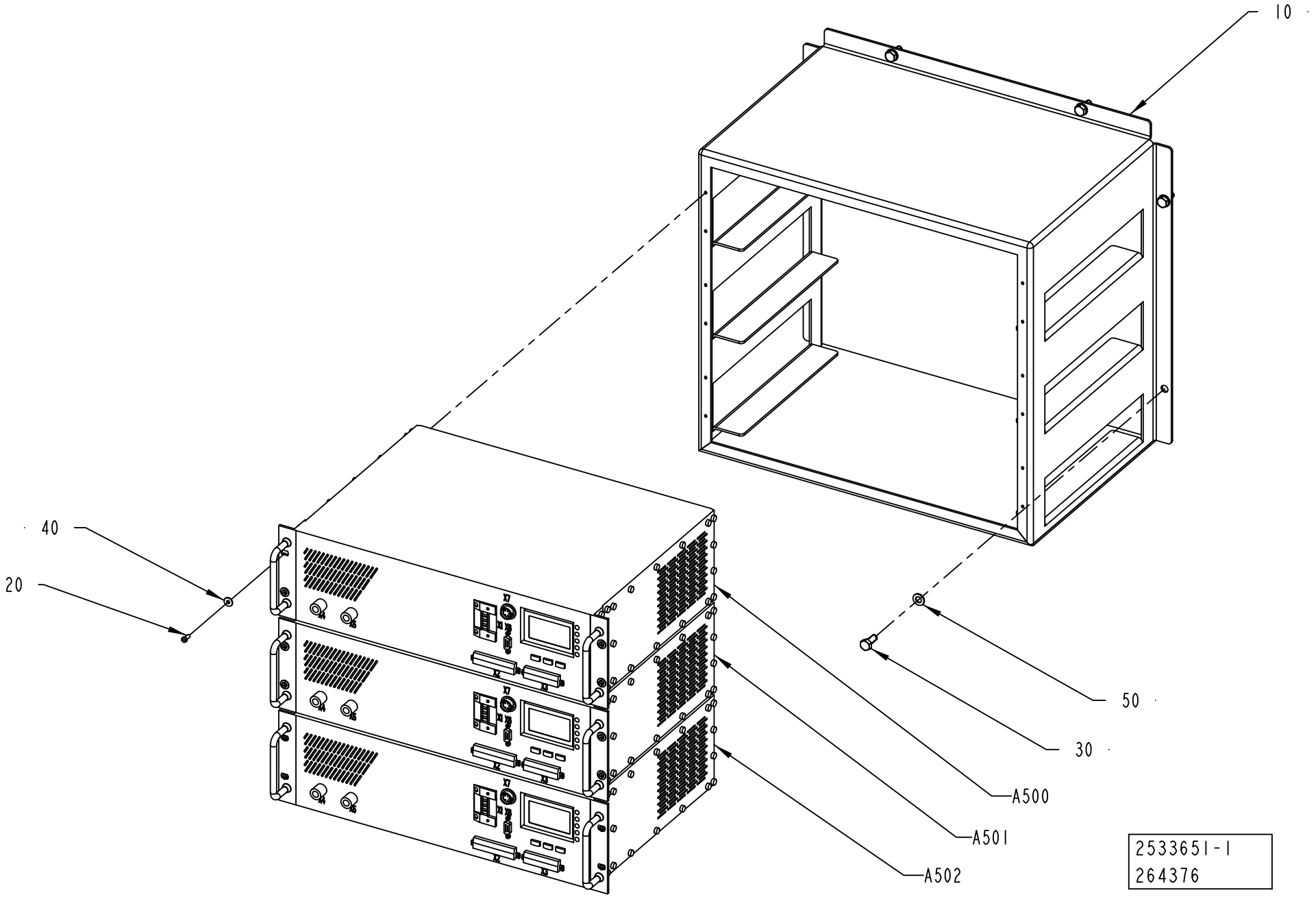
10
40
20
50
30
A500
A501
A502
2533651-1
264376

ECM: 335588 - 20080401
Group number: 2533651-0100
Assembly Drawing: 2533651-1_1_AD

Pos	Part No	UN	Qty	Description	Page No
A3/FLEX					
A500	1499642-0201		1	TPIH GENERATOR	
Common Parts					
010	1532912-0000		1	FRAME	
020	312125-0289		12	SCREW ISO 1207 M4X10 A4	
030	312105-0451		6	SCREW M6S ISO 4017 M8X20 A480	
040	90005-0082		12	WASHER PLAIN ROUND 4,3(M4)/12,H=1	
050	315105-0165		6	WASHER BRB 8,4X16 RFR	
A501	1499642-0201		1	TPIH GENERATOR	
A502	1499642-0201		1	TPIH GENERATOR	

Pos	Part No	UN	Qty	Description	Page No

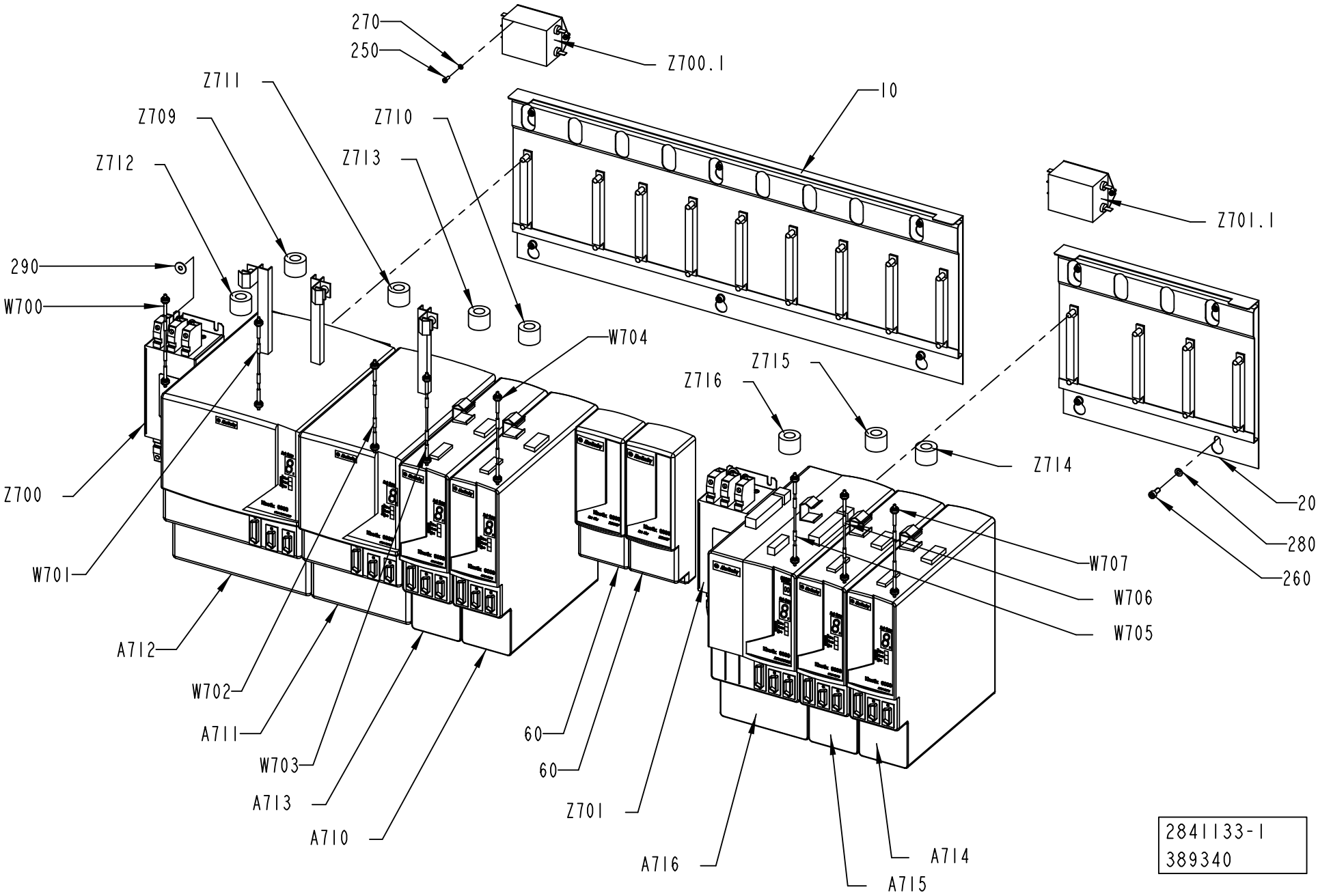
270
250
Z700.1
Z711
Z709
Z712
Z710
Z713
10
Z701.1
290
W700
W704
Z715
Z716
Z714
20
280
260
Z700
W701
W707
W706
W705
A712
W702
A711
W703
A713
A710
60
60
Z701
A716
A714
A715
2841133-1
389340

ECM: 389356 - 20090701
Group number: 2841133-0100
Assembly Drawing: 2841133-1_1_AD

This list covers pages from 9-88 to 9-91

Pos	Part No	UN	Qty	Description	Page No
A3/FLEX TBA, A3/FLEX TPA (See drawing on page: 9-88)					
060	90459-2547		2	POWER RAIL SLOT FILLER MODULE, 2094-PRF	
A710	90600-5216		1	AXIS MOD. KINETIX 6000,2094-BM02-S SER.B	
A713	90600-5216		1	AXIS MOD. KINETIX 6000,2094-BM02-S SER.B	
W702	90459-2536		1	SERCOS CABLE 0.1M, 2090-SCEP0-1	
W703	90459-2536		1	SERCOS CABLE 0.1M, 2090-SCEP0-1	
Z700.1	90458-1162		1	FILTER 6 A 250 VAC, 6FC10	
Z701	90459-2549		1	AC LINE FILTER 3-PHASE 30A, 2090-XXLF-X3	
Z701.1	90458-1162		1	FILTER 6 A 250 VAC, 6FC10	
A3/FLEX TGA (See drawing on page: 9-90)					
A710	90600-5216		1	AXIS MOD. KINETIX 6000,2094-BM02-S SER.B	
A713	90600-5216		1	AXIS MOD. KINETIX 6000,2094-BM02-S SER.B	
W702	90459-2537		1	SERCOS CABLE 0.3M	
W703	90459-2537		1	SERCOS CABLE 0.3M	
Z700.1	90458-1162		1	FILTER 6 A 250 VAC, 6FC10	
Z701	90459-2549		1	AC LINE FILTER 3-PHASE 30A, 2090-XXLF-X3	
Z701.1	90458-1162		1	FILTER 6 A 250 VAC, 6FC10	
Common Parts					
010	90459-5195		1	SLIM POWER RAIL,KINETIX,8 AXIS,2094-PRS8	
020	90459-5190		1	SLIM POWER RAIL,KINETIX,3 AXIS,2094-PRS3	
250	312125-0222		8	SCREW ISO 1207 M3X8 A4	
260	312115-0327		14	SCREW ISO4762 M5X12 A4 80	
270	315105-0124		8	WASHER BRB 3,2X6 RFR	
280	315105-0146		14	WASHER BRB 5,3X10 RFR	
290	315125-0146		4	WASHER TBRSB 5.3X15X1 A4	
A711	90459-7216		1	AXIS MODULE 650V, 21,2A, 2094-BM03-S	
A712	90459-7212		1	AXIS MODULE WITH INT. PS, 2094-BC04-M03-	
A714	90600-5214		1	AXIS MOD. KINETIX 6000,2094-BM01-S SER.B	
A715	90600-5214		1	AXIS MOD. KINETIX 6000,2094-BM01-S SER.B	
A716	90600-5212		1	AXIS MOD. W. PS,2094-BC02-M02-S SERIES B	
W700	90459-2540		1	SERCOS CABLE 3.0M, 2090-SCEP3-0	
W701	90459-2537		1	SERCOS CABLE 0.3M	
W704	90459-2539		1	SERCOS CABLE 1.0M, 2090-SCEP1-0	
W705	90459-2536		1	SERCOS CABLE 0.1M, 2090-SCEP0-1	
W706	90459-2536		1	SERCOS CABLE 0.1M, 2090-SCEP0-1	
W707	90459-2540		1	SERCOS CABLE 3.0M, 2090-SCEP3-0	
Z700	90459-2549		1	AC LINE FILTER 3-PHASE 30A, 2090-XXLF-X3	
Z709	90600-5249		1	FERRITE, B64290L616X38	
Z710	90600-5249		1	FERRITE, B64290L616X38	
Z711	90600-5249		1	FERRITE, B64290L616X38	
Z712	90600-5249		1	FERRITE, B64290L616X38	
Z713	90600-5249		1	FERRITE, B64290L616X38	
Z714	90600-5249		1	FERRITE, B64290L616X38	
Z715	90600-5249		1	FERRITE, B64290L616X38	
Z716	90600-5249		1	FERRITE, B64290L616X38	

Machine Type | Group Description | Used-In | Group Number | Page No

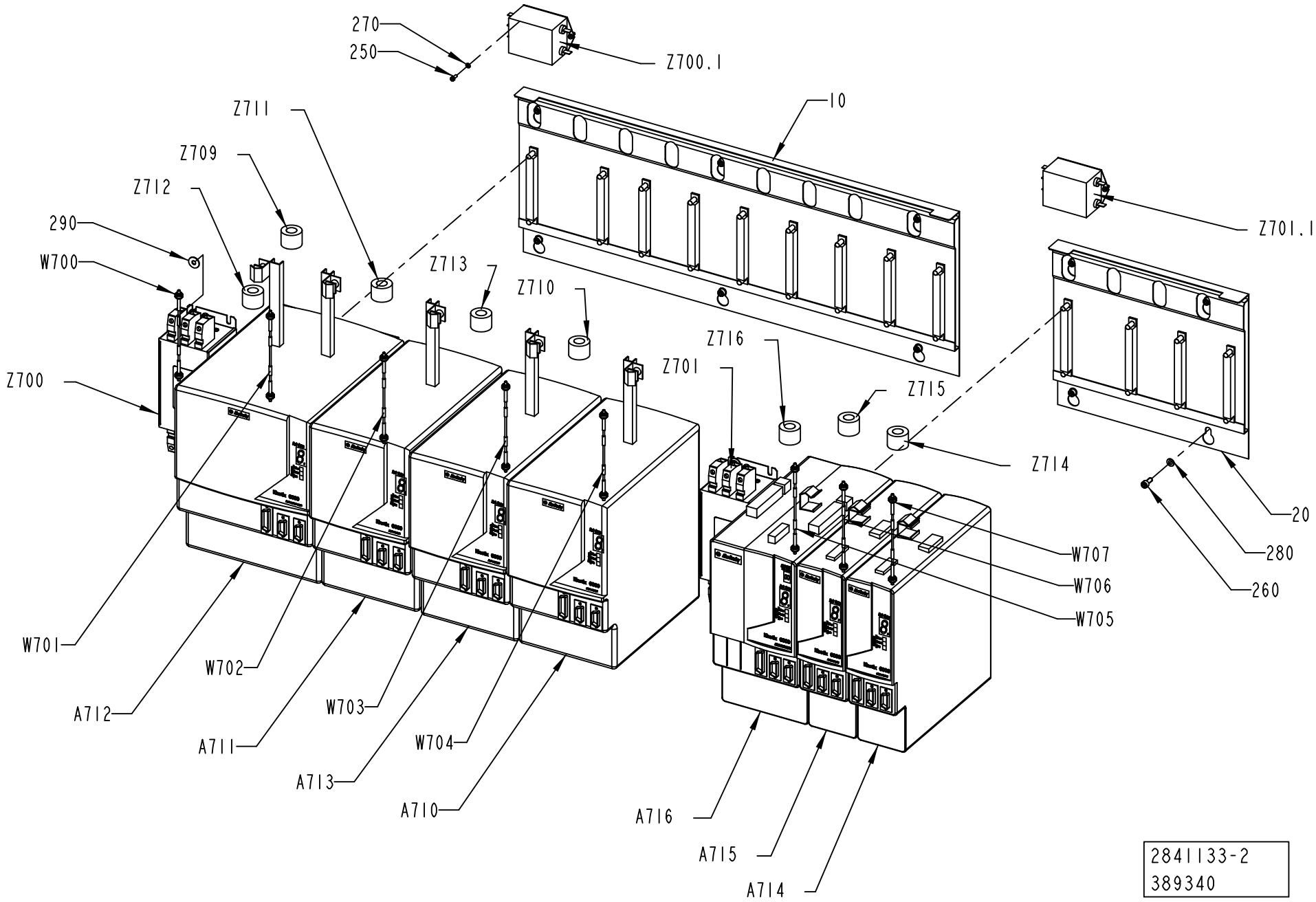
270
250
Z700.1
Z711
Z709
Z712
290
W700
Z713
Z710
10
Z701.1
Z716
Z701
Z715
Z700
Z714
20
280
260
W707
W706
W705
W701
W702
W703
W704
A712
A711
A713
A710
A716
A715
A714
2841133-2
389340

ECM: 389356 - 20090701
Group number: 2841133-0100
Assembly Drawing: 2841133-2_1_AC

This list covers pages from 9-88 to 9-91

Pos	Part No	UN	Qty	Description	Page No
A3/FLEX TBA, A3/FLEX TPA (See drawing on page: 9-88)					
060	90459-2547		2	POWER RAIL SLOT FILLER MODULE, 2094-PRF	
A710	90600-5216		1	AXIS MOD. KINETIX 6000,2094-BM02-S SER.B	
A713	90600-5216		1	AXIS MOD. KINETIX 6000,2094-BM02-S SER.B	
W702	90459-2536		1	SERCOS CABLE 0.1M, 2090-SCEP0-1	
W703	90459-2536		1	SERCOS CABLE 0.1M, 2090-SCEP0-1	
Z700.1	90458-1162		1	FILTER 6 A 250 VAC, 6FC10	
Z701	90459-2549		1	AC LINE FILTER 3-PHASE 30A, 2090-XXLF-X3	
Z701.1	90458-1162		1	FILTER 6 A 250 VAC, 6FC10	
A3/FLEX TGA (See drawing on page: 9-90)					
A710	90600-5216		1	AXIS MOD. KINETIX 6000,2094-BM02-S SER.B	
A713	90600-5216		1	AXIS MOD. KINETIX 6000,2094-BM02-S SER.B	
W702	90459-2537		1	SERCOS CABLE 0.3M	
W703	90459-2537		1	SERCOS CABLE 0.3M	
Z700.1	90458-1162		1	FILTER 6 A 250 VAC, 6FC10	
Z701	90459-2549		1	AC LINE FILTER 3-PHASE 30A, 2090-XXLF-X3	
Z701.1	90458-1162		1	FILTER 6 A 250 VAC, 6FC10	
Common Parts					
010	90459-5195		1	SLIM POWER RAIL,KINETIX,8 AXIS,2094-PRS8	
020	90459-5190		1	SLIM POWER RAIL,KINETIX,3 AXIS,2094-PRS3	
250	312125-0222		8	SCREW ISO 1207 M3X8 A4	
260	312115-0327		14	SCREW ISO4762 M5X12 A4 80	
270	315105-0124		8	WASHER BRB 3,2X6 RFR	
280	315105-0146		14	WASHER BRB 5,3X10 RFR	
290	315125-0146		4	WASHER TBRSB 5.3X15X1 A4	
A711	90459-7216		1	AXIS MODULE 650V, 21,2A, 2094-BM03-S	
A712	90459-7212		1	AXIS MODULE WITH INT. PS, 2094-BC04-M03-	
A714	90600-5214		1	AXIS MOD. KINETIX 6000,2094-BM01-S SER.B	
A715	90600-5214		1	AXIS MOD. KINETIX 6000,2094-BM01-S SER.B	
A716	90600-5212		1	AXIS MOD. W. PS,2094-BC02-M02-S SERIES B	
W700	90459-2540		1	SERCOS CABLE 3.0M, 2090-SCEP3-0	
W701	90459-2537		1	SERCOS CABLE 0.3M	
W704	90459-2539		1	SERCOS CABLE 1.0M, 2090-SCEP1-0	
W705	90459-2536		1	SERCOS CABLE 0.1M, 2090-SCEP0-1	
W706	90459-2536		1	SERCOS CABLE 0.1M, 2090-SCEP0-1	
W707	90459-2540		1	SERCOS CABLE 3.0M, 2090-SCEP3-0	
Z700	90459-2549		1	AC LINE FILTER 3-PHASE 30A, 2090-XXLF-X3	
Z709	90600-5249		1	FERRITE, B64290L616X38	
Z710	90600-5249		1	FERRITE, B64290L616X38	
Z711	90600-5249		1	FERRITE, B64290L616X38	
Z712	90600-5249		1	FERRITE, B64290L616X38	
Z713	90600-5249		1	FERRITE, B64290L616X38	
Z714	90600-5249		1	FERRITE, B64290L616X38	
Z715	90600-5249		1	FERRITE, B64290L616X38	
Z716	90600-5249		1	FERRITE, B64290L616X38	

Machine Type	Group Description	Used-In	Group Number	Page No

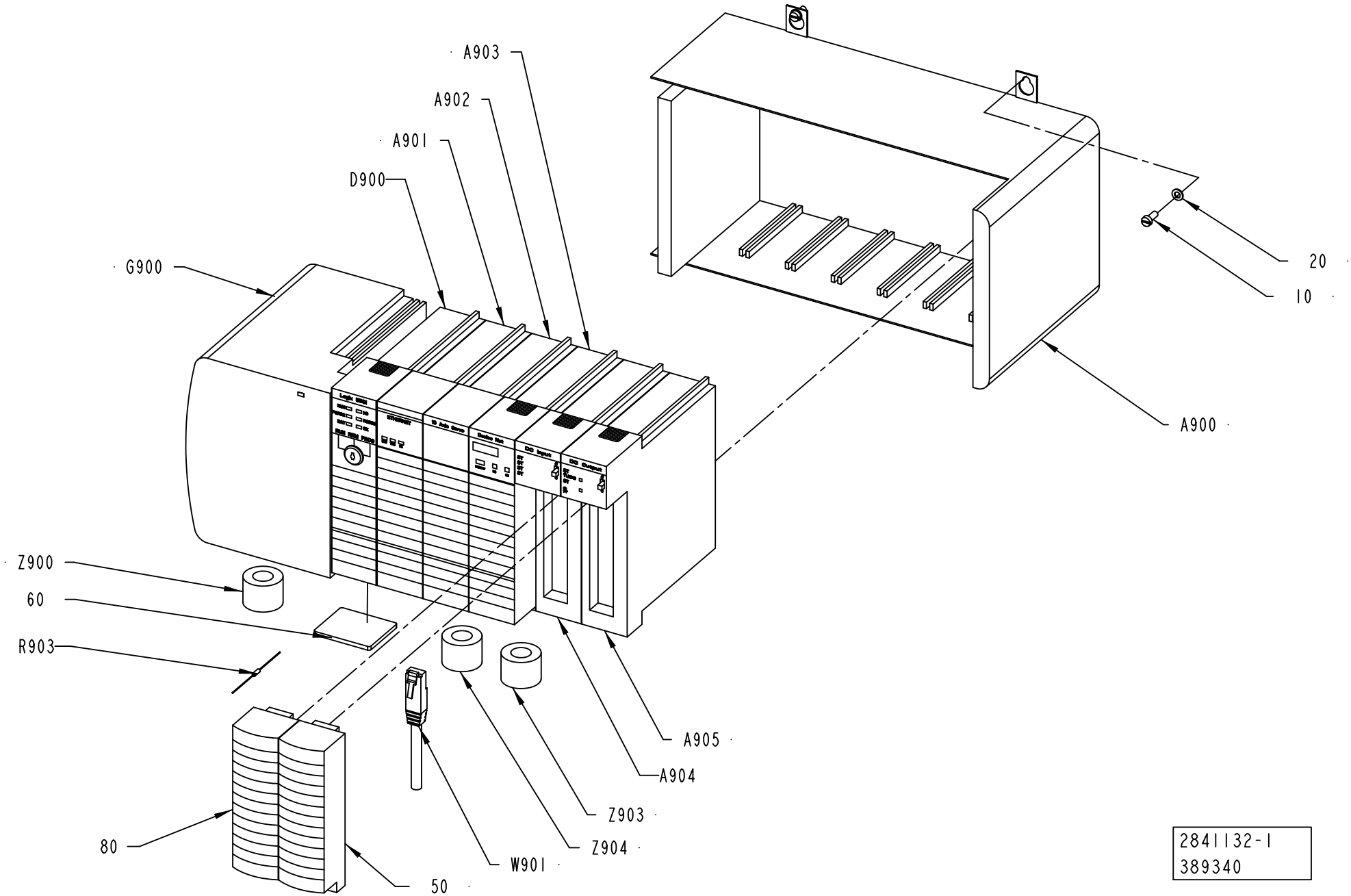
A903
A902
A901
D900
G900
20
10
A900
Z900
60
R903
A905
A904
Z903
Z904
W901
80
50
2841132-1
389340

ECM: 389355 - 20090701
Group number: 2841132-0100
Assembly Drawing: 2841132-1_1_AF

Pos	Part No	UN	Qty	Description	Page No
-					
010	312121-0289		4	SCREW ISO 1207 M4X10 4.8-5.8 Z.PL.	
020	315101-0136		4	WASHER BRB, 4,3/8 H=0,8	
050	90459-2487		1	REMOVABLE TERMINAL BLOCK 20 POINTS	
060	90459-3145		1	FLASH MEMORY 64MBYTE, 1784-CF64	
080	90459-2488		1	REMOVABLE TERMINAL BLOCK 36 POINTS	
A900	90459-2421		1	BASEPLATE, 7 SLOT CONTROLLOGIX CHASSIS	
A901	90459-2477		1	ETHERNET I/P BRIDGE MODULE, 1756-ENBT	
A902	90459-2481		1	PLC 16-AXIS SERCOS MOTION MODULE	
A903	90600-5840		1	PLC DEVICEN. BR./SCAN MOD, 1756-DNB, D	
A904	90459-6556		1	PLC DIGITAL INPUT 32PTS, 1756-IB32/B	
A905	90459-2474		1	PLC,DIGIT. OUTPUT MODULE 16 PTS 10-31VDC	
D900	90459-6559		1	PROCESSOR L63, SERIES B, 1756-L63/B	
	90459-6726		*1*	*SPARE BATTERY FOR CONTROLLOGIX, 1756-BA2*	
G900	90459-7267		1	POWER SUPPLY 24VDC, 1756-PB75/B	
R903	90459-1297		1	RESISTANCE FIXED, 120 OHM, 0,25 W	
W901	90220-0181		1	CABLE, ETHERNET RJ 45 CONNECT. 5 M	
Z900	90600-5249		1	FERRITE, B64290L616X38	
Z903	90600-5249		1	FERRITE, B64290L616X38	
Z904	90600-5249		1	FERRITE, B64290L616X38	

Pos	Part No	UN	Qty	Description	Page No

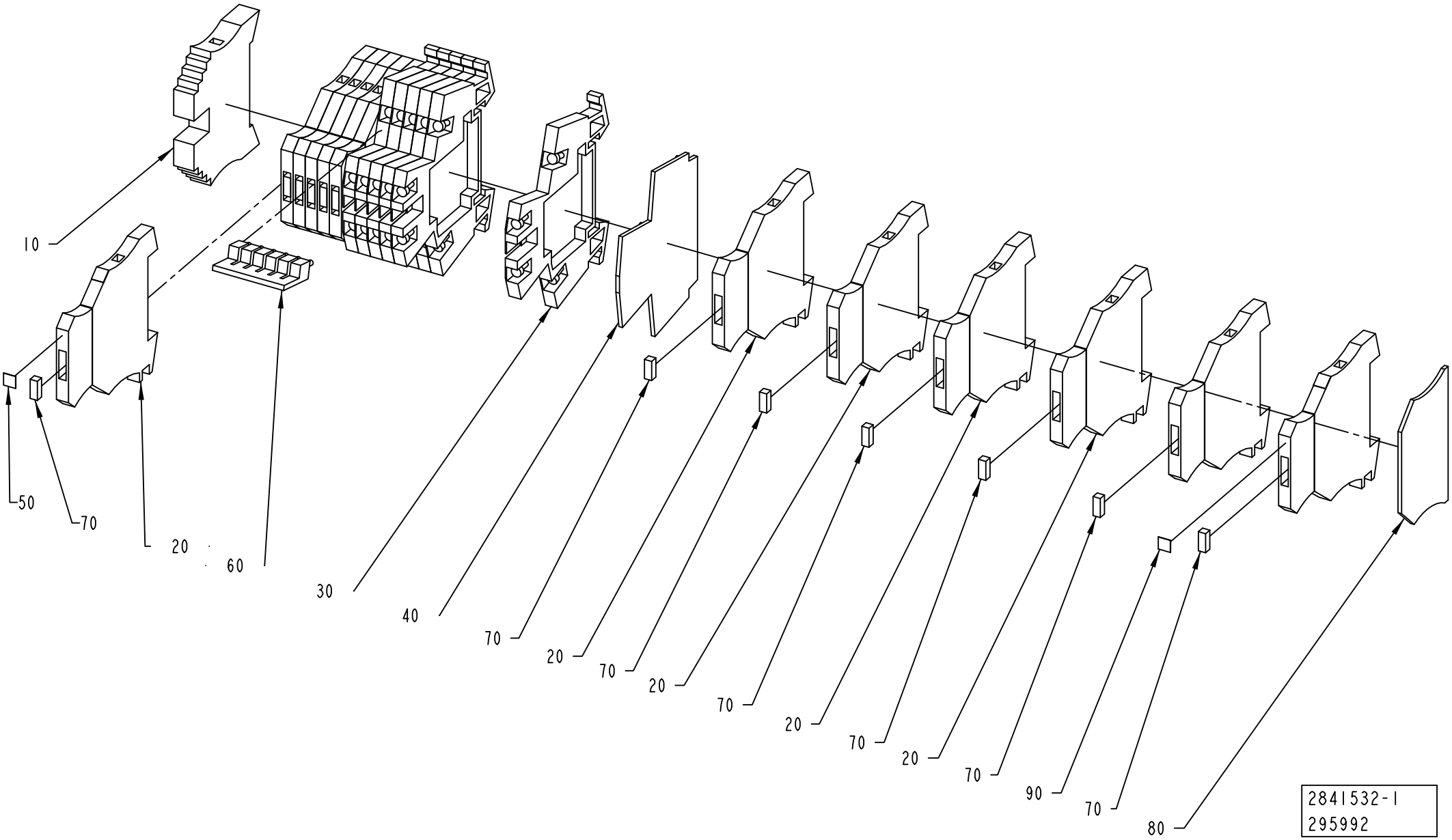
10
50
70
20
60
30
40
70
20
70
20
70
20
70
20
70
90
70
80
2841532-1
295992

ECM: 306277 - 20070701
Group number: 2841532-0100
Assembly Drawing: 2841532-1_1_AC

Pos	Part No	UN	Qty	Description	Page No
-					
010	353031-0203		1	END SUPPORT, WEW 35/2	
020	353021-0127		12	TERMINAL DISCONNECTABLE, WTR 2,5+WSD 2,5	
030	90077-0113		6	FEED THROUGH TERMINAL, 10-00102150-1	
040	353032-0009		1	END PLATE, WAP FOR WDK	
050	359011-0807		2	MARKING PLATES 5-FW 1-50	
060	353034-0030		1	BRIDGE CONNECTOR WQV 2,5/10, 10544.6	
070	90600-1199		12	VARISTOR MOV, 390KD07	
080	353032-0004		1	END PLATE WAP 2,5-10 BEIGE	
090	359011-0808		2	MARKING PLATES 5-FW 51-100	

Pos	Part No	UN	Qty	Description	Page No

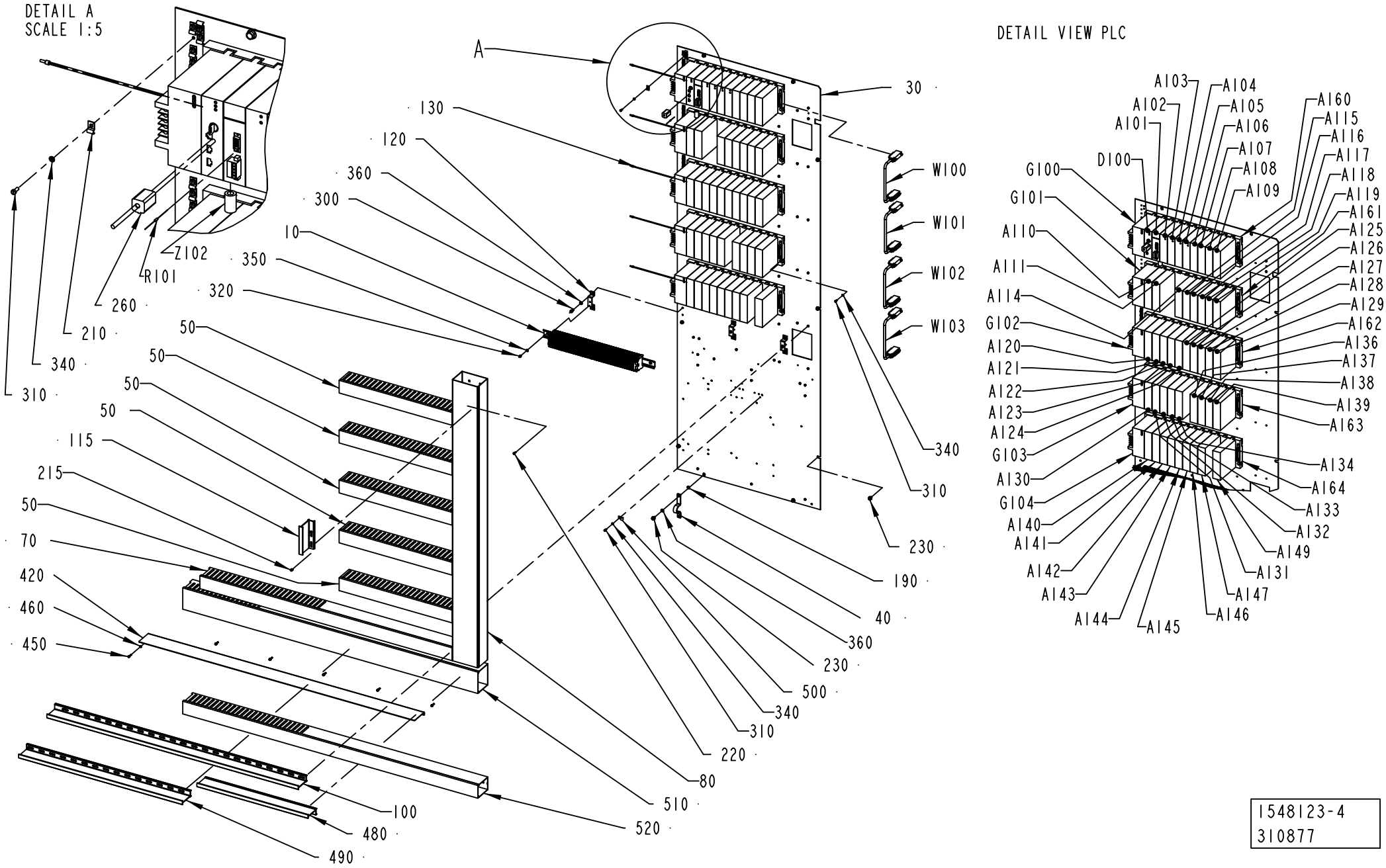

1548123-4
310877

ECM: 387944 - 20090403
Group number: 1548123-0150
Assembly Drawing: 1548123-4_1_AD

This list covers pages from 9-96 to 9-99

Pos	Part No	UN	Qty	Description	Page No
A3/FLEX					
010	2841531-0100		1	PLINTH	**9-101**
030	2841128-0000		1	MOUNTING PLATE	
040	90135-0035		1	EARTH WIRE, L=250 MM 16 MM2	
070	2841131-0000		1	CABLE DUCT	
080	2850659-0000		1	CABLE DUCT	
100	2850660-0000		1	DIVIDER	
120	90458-1447		3	MOUNTING RAIL SUPPORT TST 128660	
130	1512322-0000		5	COPPER BRAID	
190	90062-0022		2	LOCK WASHER D=6,4/11	
210	90165-0003		34	PIPE CLIP FOR TUBE D=4 MM	
215	90181-0064		14	LOCK ZP1 FOR CHANNEL T1	
220	90287-0124		45	SCREW PAN HEAD MSCS M4X12 NYLON	
260	90458-1170		1	FERRITE, SFC-6	
310	312121-0289		64	SCREW ISO 1207 M4X10 4.8-5.8 Z.PL.	
340	315101-0136		64	WASHER BRB, 4,3/8 H=0,8	
360	315101-0153		7	WASHER PLAIN, BRB, 6,4/12 H=1,5	
420	2894089-0000		1	DIVIDER	
450	312115-0293		6	SCREW ISO4762 M4X16 A4 80	
460	315105-0136		6	WASHER BRB 4,3X8 RFR	
480	2871015-0000		1	DIVIDER	
490	2871016-0000		1	DIVIDER	
500	90165-0007		1	PIPE CLIP FOR TUBE D=8 MM	
510	2894087-0000		1	CABLE DUCT	
520	2894088-0000		1	CABLE DUCT	
530	315105-0153		1	WASHER BRB 6,4X12 RFR	
A101	90459-4233		1	DEVICENET MASTER MODULE	
A102	90031-0062		1	PLC, ANALOG OUTPUT MODULE 8PT/CURR/VOLT	
A103	90031-0062		1	PLC, ANALOG OUTPUT MODULE 8PT/CURR/VOLT	
A104	90031-0061		1	PLC,ANALOG INPUT MODULE 16 PT/CURRENT	
A105	90031-0060		1	PLC,ANALOG INPUT MODULE 16 PT/VOLTAGE	
A106	90031-0065		1	PLC,TEMPERATUR CONTROL,INPUT MODULE 8 PT	
A107	90031-0065		1	PLC,TEMPERATUR CONTROL,INPUT MODULE 8 PT	
A108	90031-0065		1	PLC,TEMPERATUR CONTROL,INPUT MODULE 8 PT	
A109	90031-0058		1	PLC, DIGITAL INPUT MODULE	
A140	90031-0059		1	PLC, DIGITAL OUTPUT MODULE	
A141	90031-0059		1	PLC, DIGITAL OUTPUT MODULE	
A142	90031-0059		1	PLC, DIGITAL OUTPUT MODULE	
A143	90031-0059		1	PLC, DIGITAL OUTPUT MODULE	
A144	90031-0059		1	PLC, DIGITAL OUTPUT MODULE	
A149	90031-0059		1	PLC, DIGITAL OUTPUT MODULE	
R101	90459-1297		1	RESISTANCE FIXED, 120 OHM, 0,25 W	
Z102	90458-1141		1	FERRITE, RI-16-28-9	
Common Parts					
050	2557587-0000		5	CABLE DUCT	
115	2675522-0000		1	DIVIDER	
230	90287-0157		11	SCREW M6SF FLAT HEAD M6X10 88	
300	312111-0366		6	SCREW HEX.SOCK.HD.MC6S-TT 6X12 88 FZB	
320	312121-0321		3	SCREW ISO 1207 M5X6 4.8-5.8 Z.PL.	
350	315101-0146		3	WASHER PLAIN, BRB, 5,3/10 H=1	
A110	90031-0057		1	PLC, DIGITAL INPUT MODULE	
A111	90031-0057		1	PLC, DIGITAL INPUT MODULE	
A114	90031-0057		1	PLC, DIGITAL INPUT MODULE	
A115	90031-0057		1	PLC, DIGITAL INPUT MODULE	
A116	90031-0057		1	PLC, DIGITAL INPUT MODULE	
A117	90031-0057		1	PLC, DIGITAL INPUT MODULE	
A118	90031-0057		1	PLC, DIGITAL INPUT MODULE	
A119	90031-0057		1	PLC, DIGITAL INPUT MODULE	
A120	90031-0057		1	PLC, DIGITAL INPUT MODULE	
A121	90031-0057		1	PLC, DIGITAL INPUT MODULE	
A122	90031-0057		1	PLC, DIGITAL INPUT MODULE	
A123	90031-0057		1	PLC, DIGITAL INPUT MODULE	
A124	90031-0057		1	PLC, DIGITAL INPUT MODULE	
A125	90031-0057		1	PLC, DIGITAL INPUT MODULE	
A126	90031-0057		1	PLC, DIGITAL INPUT MODULE	
A127	90031-0057		1	PLC, DIGITAL INPUT MODULE	
A128	90031-0057		1	PLC, DIGITAL INPUT MODULE	
A129	90031-0057		1	PLC, DIGITAL INPUT MODULE	
A130	90031-0059		1	PLC, DIGITAL OUTPUT MODULE	
A131	90031-0059		1	PLC, DIGITAL OUTPUT MODULE	
A132	90031-0059		1	PLC, DIGITAL OUTPUT MODULE	
A133	90031-0059		1	PLC, DIGITAL OUTPUT MODULE	
A134	90031-0059		1	PLC, DIGITAL OUTPUT MODULE	
A136	90031-0059		1	PLC, DIGITAL OUTPUT MODULE	
A137	90031-0059		1	PLC, DIGITAL OUTPUT MODULE	
A138	90031-0059		1	PLC, DIGITAL OUTPUT MODULE	
A139	90031-0059		1	PLC, DIGITAL OUTPUT MODULE	
A145	90031-0059		1	PLC, DIGITAL OUTPUT MODULE	
A146	90031-0059		1	PLC, DIGITAL OUTPUT MODULE	
A147	90031-0059		1	PLC, DIGITAL OUTPUT MODULE	
A160	90031-0051		1	BASEPLATE, 10-SLOT	
A161	90031-0053		1	BASEPLATE,10-SLOT	
	90031-0302		*1*	*I/O BUS TERMINATION PLUG*	
A162	90031-0053		1	BASEPLATE,10-SLOT	

Machine Type | Group Description | Used-In | Group Number | Page No

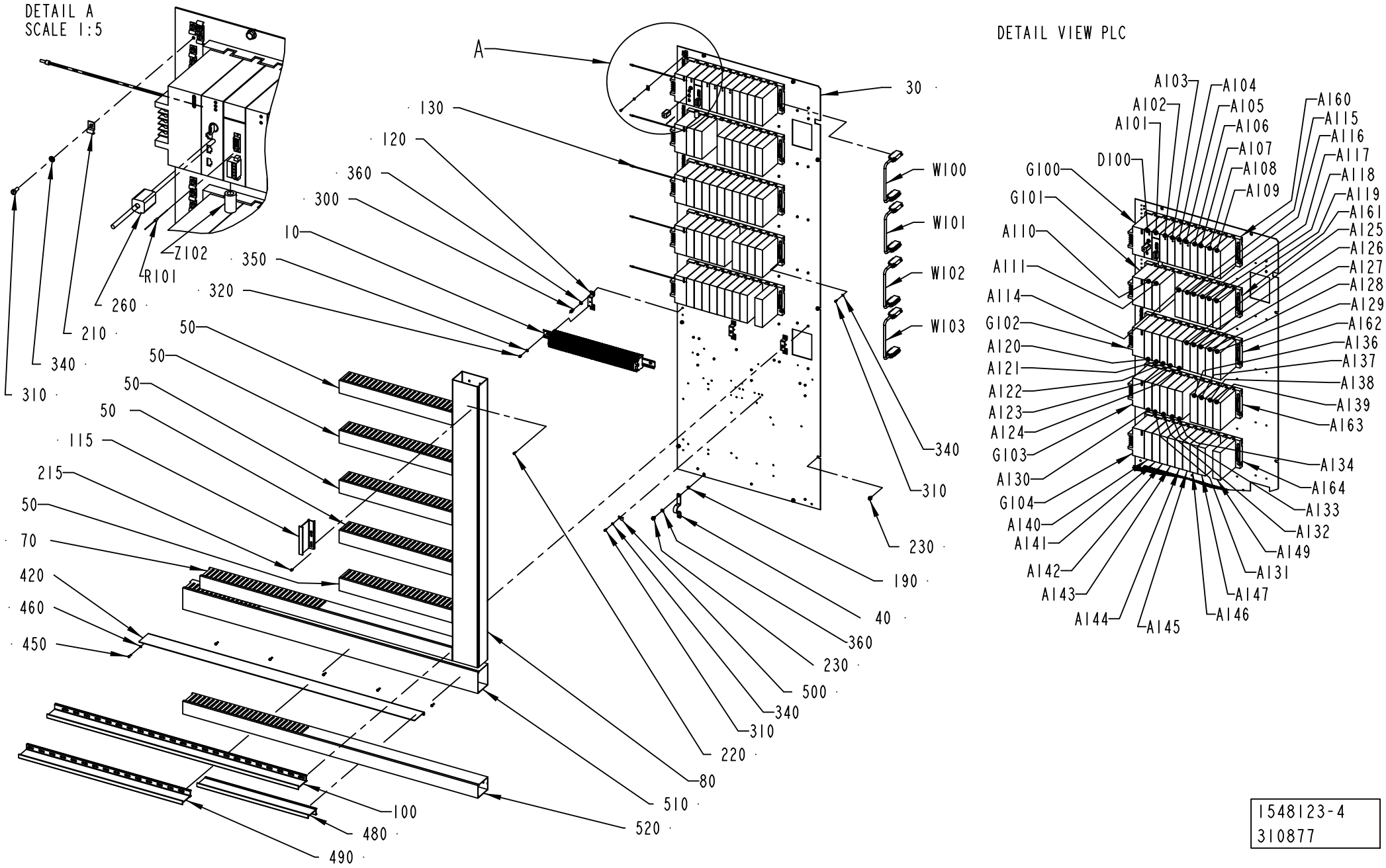

1548123-4
310877

Pos	Part No	UN	Qty	Description	Page No
Common Parts (Cont'd)					
A163	90031-0053		1	BASEPLATE,10-SLOT	
	90031-0302		*1*	*I/O BUS TERMINATION PLUG*	
A164	90031-0053		1	BASEPLATE,10-SLOT	
	90031-0302		*1*	*I/O BUS TERMINATION PLUG*	
D100	90600-1223		1	CPU374, ETHERNET COMMUNICATION	
G100	90031-0068		1	PLC, POWER SUPPLY	
	90031-0301		*1*	*SPARE BATTERY CPU PCM 2PCS*	
	352551-0134		*1*	*FINE-WIRE FUSE 2 A SLOW,5X20MM*	
G101	90031-0068		1	PLC, POWER SUPPLY	
	90031-0301		*1*	*SPARE BATTERY CPU PCM 2PCS*	
	352551-0134		*1*	*FINE-WIRE FUSE 2 A SLOW,5X20MM*	
G102	90031-0068		1	PLC, POWER SUPPLY	
	90031-0301		*1*	*SPARE BATTERY CPU PCM 2PCS*	
	352551-0134		*1*	*FINE-WIRE FUSE 2 A SLOW,5X20MM*	
G103	90031-0068		1	PLC, POWER SUPPLY	
	90031-0301		*1*	*SPARE BATTERY CPU PCM 2PCS*	
	352551-0134		*1*	*FINE-WIRE FUSE 2 A SLOW,5X20MM*	
G104	90031-0068		1	PLC, POWER SUPPLY	
	90031-0301		*1*	*SPARE BATTERY CPU PCM 2PCS*	
	352551-0134		*1*	*FINE-WIRE FUSE 2 A SLOW,5X20MM*	
W100	90031-0305		1	I/O EXPANSION CABLE	
W101	90031-0305		1	I/O EXPANSION CABLE	
W102	90031-0305		1	I/O EXPANSION CABLE	
W103	90031-0305		1	I/O EXPANSION CABLE	

Pos	Part No	UN	Qty	Description	Page No

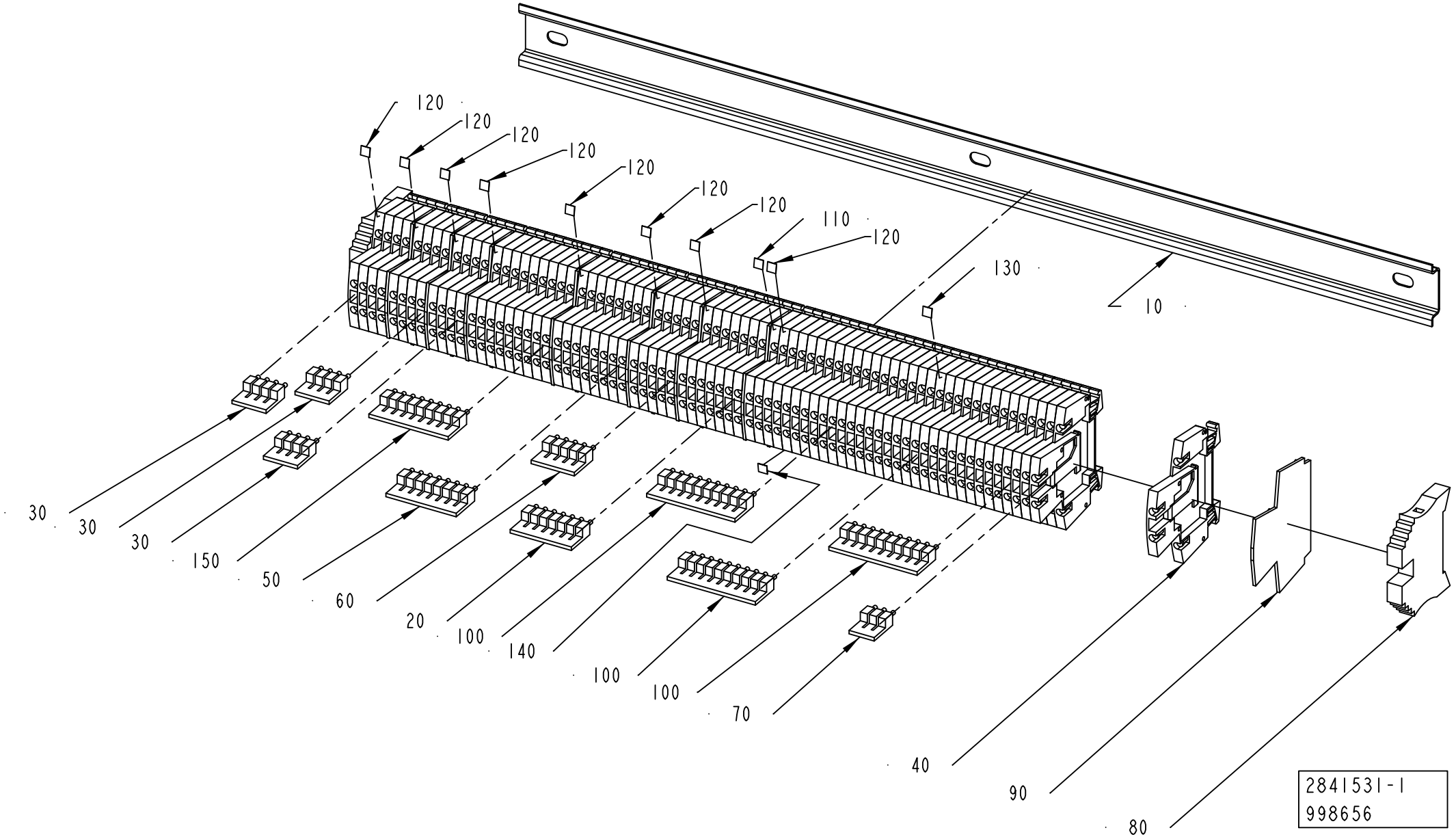
120
120
120
120
120
120
120
110
120
130
10
30
30
30
150
50
60
20
100
140
100
100
70
40
90
80
2841531-1
998656

ECM: 998656 - 20070611
Group number: 2841531-0100
Assembly Drawing: 2841531-1_1_AB

Pos	Part No	UN	Qty	Description	Page No
A3/FLEX					
030	353034-0030		3	BRIDGE CONNECTOR WQV 2,5/10, 10544.6	
040	90457-0049		74	TERMINAL BLOCK WDK 2.5V, 102230	
060	353034-0030		1	BRIDGE CONNECTOR WQV 2,5/10, 10544.6	
070	353034-0030		1	BRIDGE CONNECTOR WQV 2,5/10, 10544.6	
090	353032-0009		8	END PLATE, WAP FOR WDK	
120	359011-0809		8	MARKING PLATES 5-FW 101-150	
Common Parts					
010	2557594-0000		1	RAIL	
020	353034-0030		1	BRIDGE CONNECTOR WQV 2,5/10, 10544.6	
050	353034-0030		1	BRIDGE CONNECTOR WQV 2,5/10, 10544.6	
080	353031-0203		2	END SUPPORT, WEW 35/2	
100	353034-0030		3	BRIDGE CONNECTOR WQV 2,5/10, 10544.6	
110	359011-0808		1	MARKING PLATES 5-FW 51-100	
130	359011-0810		1	MARKING PLATES 5-FW 151-200	
140	359011-0811		1	MARKING PLATES 5-FW 201-2	
150	353034-0030		1	BRIDGE CONNECTOR WQV 2,5/10, 10544.6	

Pos	Part No	UN	Qty	Description	Page No

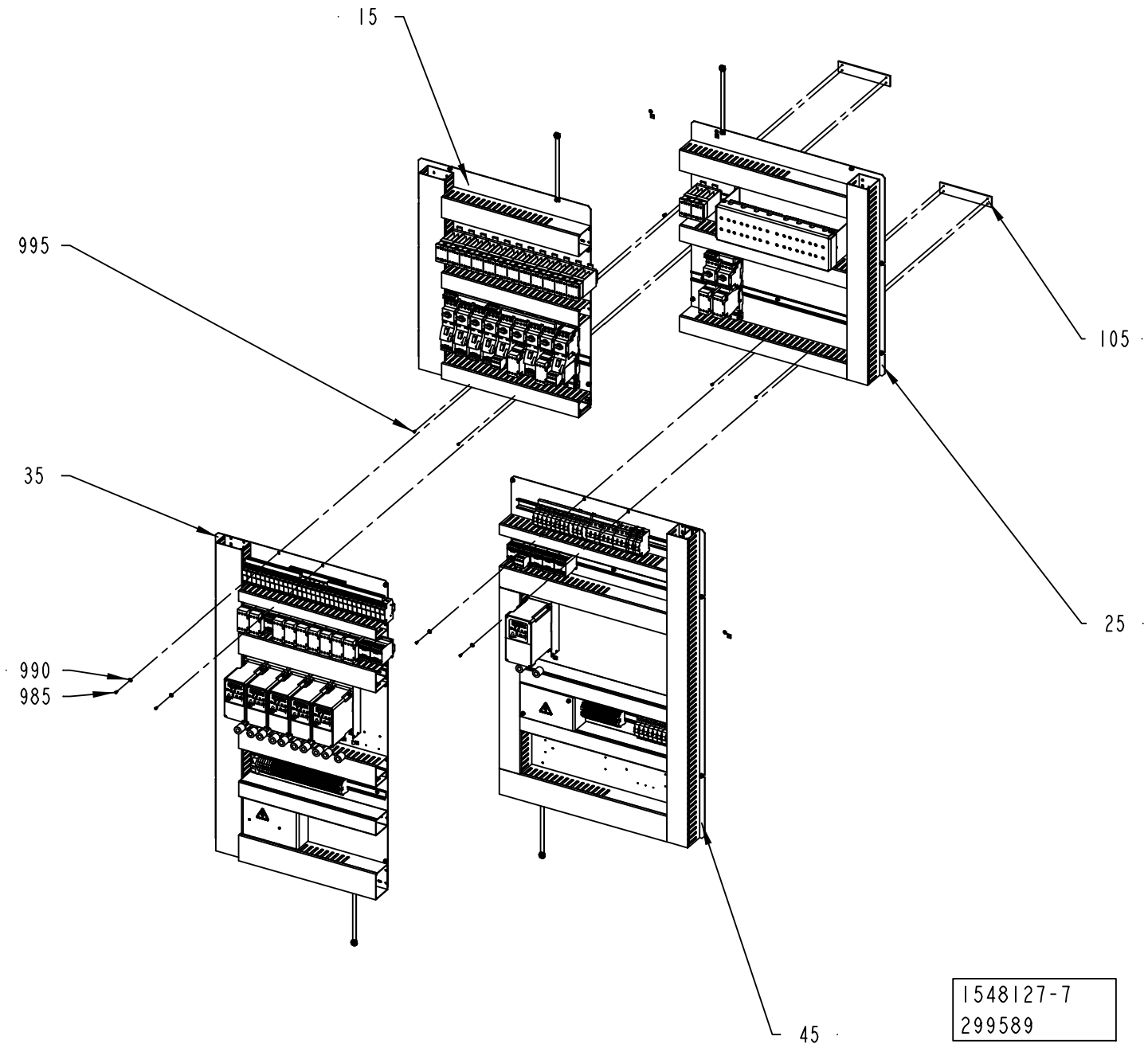
15
995
105
35
25
990
985
45
1548127-7
299589

ECM: 379625 - 20090401
Group number: 1548127-0250
Assembly Drawing: 1548127-7_1_AB

Pos	Part No	UN	Qty	Description	Page No
A3/FLEX TBA, A3/FLEX TPA (See drawing on page: 9-102)					
015	2876491-0100		1	COMPONENT PLATES	**9-105**
025	2876492-0100		1	COMPONENT PLATES	**9-111, 9-113**
035	2876493-0100		1	COMPONENT PLATES	**9-123, 9-125**
045	2876494-0100		1	COMPONENT PLATES	**9-135, 9-137**
105	2885010-0000		2	PLATE	
985	312125-0287		4	SCREW ISO 1207 M4X8 A4	
990	90005-0082		4	WASHER PLAIN ROUND 4,3(M4)/12,H=1	
995	312155-0291		4	SCREW DIN 7991 MF6S M4X12 A4 70	
A3/FLEX TGA (See drawing on page: 9-102)					
015	2876491-0100		1	COMPONENT PLATES	**9-105**
025	2876492-0100		1	COMPONENT PLATES	**9-111, 9-113**
035	2876493-0100		1	COMPONENT PLATES	**9-123, 9-125**
045	2876494-0100		1	COMPONENT PLATES	**9-135, 9-137**
105	2885010-0000		2	PLATE	
985	312125-0287		4	SCREW ISO 1207 M4X8 A4	
990	90005-0082		4	WASHER PLAIN ROUND 4,3(M4)/12,H=1	
995	312155-0291		4	SCREW DIN 7991 MF6S M4X12 A4 70	

Pos	Part No	UN	Qty	Description	Page No

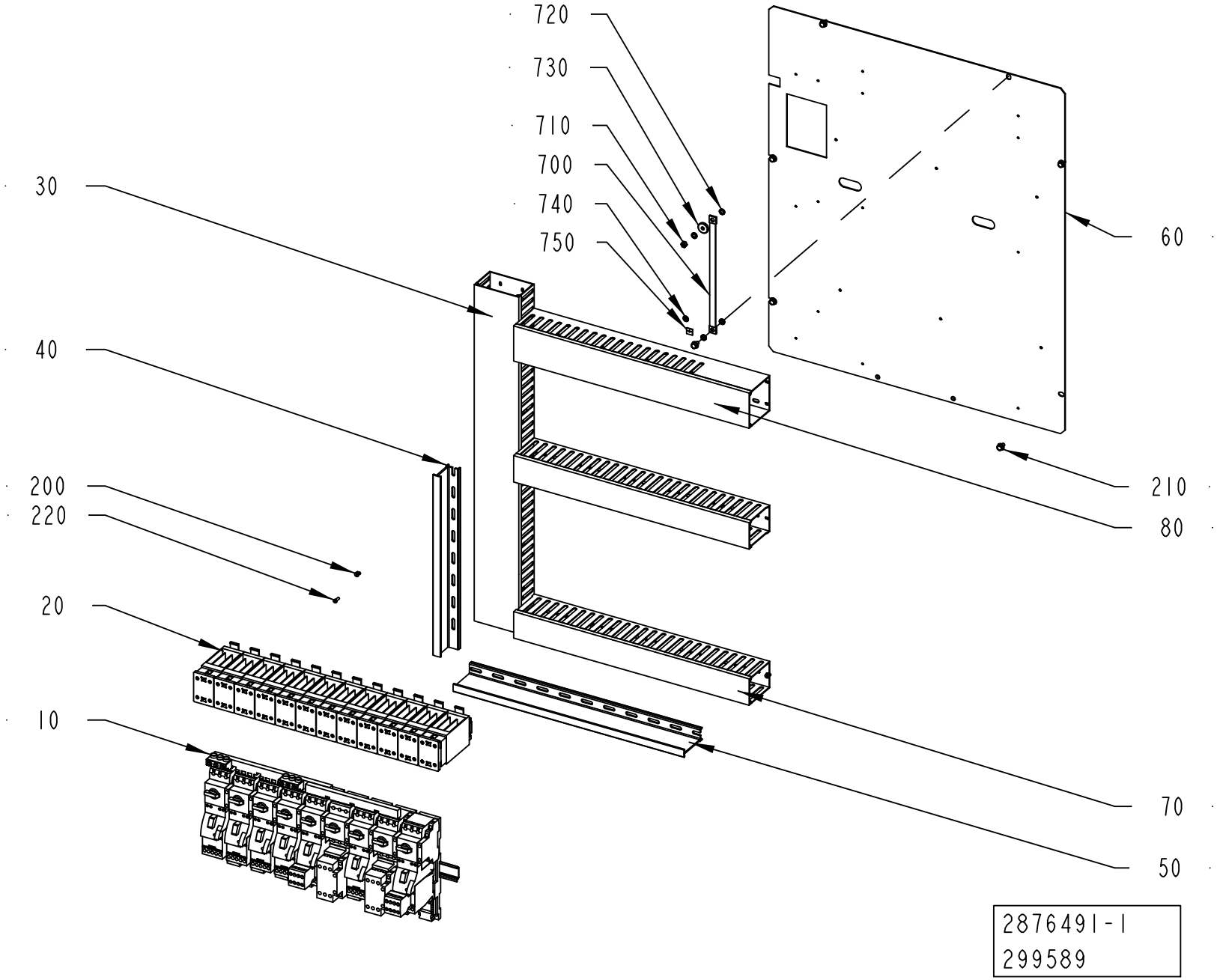
720
730
710
700
740
750
30
40
200
220
20
10
60
210
80
70
50
2876491-1
299589

ECM: 340645 - 20080215
Group number: 2876491-0100
Assembly Drawing: 2876491-1_1_AA

Pos	Part No	UN	Qty	Description	Page No
A3/FLEX					
10	2892586-0100		1	FUSE BOARD 1	**9-107**
20	2892589-0100		1	RELAY UNIT 1	**9-109**
Common Parts					
200	90181-0064		4	LOCK ZP1 FOR CHANNEL T1	
210	90287-0157		6	SCREW M6SF FLAT HEAD M6X10 88	
220	90287-0124		14	SCREW PAN HEAD MSCS M4X12 NYLON	
30	2892577-0000		1	CABLE DUCT	
40	2892592-0000		1	DIVIDER	
50	2889864-0000		1	DIVIDER	
60	2892576-0000		1	MOUNTING PLATE	
70	2892573-0000		2	CABLE DUCT 60X80MM	
700	90135-0035		1	EARTH WIRE, L=250 MM 16 MM2	
710	312601-0316		1	HEXAGON NUT, DIN 934 M6 8 FZB	
720	90062-0015		4	LOCK WASHER SERRAT.EXT.GEAR,6,4/11 H=0,7	
730	315125-0153		1	WASHER TBRSB 6,4X22X4 A4	
740	2608177-0000		1	SIGN	
750	90194-0152		1	SIGN, EARTH	
80	2892574-0000		1	CABLE DUCT 80X80MM	

Pos	Part No	UN	Qty	Description	Page No

FUSE BOARD 1

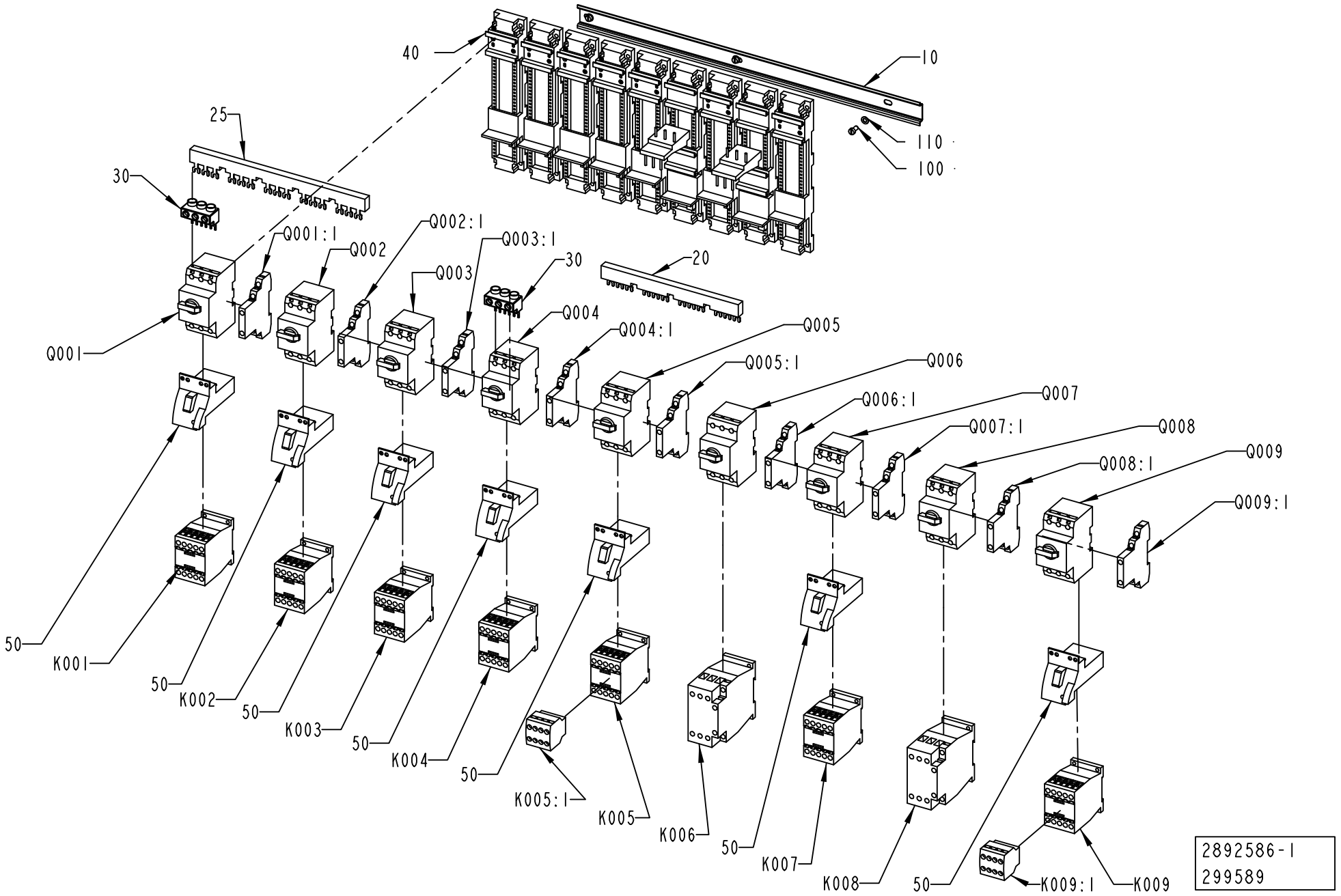
40
10
25
110
100
30
Q001:1
Q002
Q002:1
Q003
Q003:1
30
20
Q004
Q004:1
Q005
Q001
Q005:1
Q006
Q006:1
Q007
Q007:1
Q008
Q008:1
Q009
Q009:1
50
K001
50
K002
50
K003
50
K004
50
K005:1
K005
K006
50
K007
K008
50
K009:1
K009
2892586-1
299589

ECM: 305440 - 20070701
Group number: 2892586-0100
Assembly Drawing: 2892586-1_1_AA

Pos	Part No	UN	Qty	Description	Page No
-					
10	2892599-0000		1	RAIL	
100	312125-0325		3	SCREW ISO 1207 M5X10 A4	
110	315105-0146		3	WASHER BRB 5,3X10 RFR	
20	90259-0309		1	BUSBAR 3-POLE B3.1/4-PKZ0, 044947	
25	90259-0311		1	3 POLE BUSBAR, K&M B3.1/5	
30	90458-0577		2	CONNECTION TERMINAL BK 25/3-PKZ 0	
40	90459-6851		9	BASE UNIT, PKZM0-XDM32	
50	90459-6850		7	CONNECTION, PKZM0-XDM12	
K001	90459-5440		1	CONTACTOR 4KW 24VDC, DILM9-01	
K002	90459-5440		1	CONTACTOR 4KW 24VDC, DILM9-01	
K003	90459-5440		1	CONTACTOR 4KW 24VDC, DILM9-01	
K004	90459-5440		1	CONTACTOR 4KW 24VDC, DILM9-01	
K005	90459-5440		1	CONTACTOR 4KW 24VDC, DILM9-01	
K005:1	90459-6852		1	AUXILIARY CONTACT, DILA-XHI22	
K006	90459-5441		1	CONTACTOR 7,5KW 24VDC, DILM17-01	
K007	90459-5440		1	CONTACTOR 4KW 24VDC, DILM9-01	
K008	90459-5441		1	CONTACTOR 7,5KW 24VDC, DILM17-01	
K009	90459-5440		1	CONTACTOR 4KW 24VDC, DILM9-01	
K009:1	90459-6852		1	AUXILIARY CONTACT, DILA-XHI22	
Q001	90459-5324		1	OVERLOAD PROTECTION, PKZM0-1,6	
Q001:1	90259-0313		1	AUXILIARY CONTACT 072894 NHI21-PKZM0	
Q002	90459-5326		1	OVERLOAD PROTECTION, PKZM0-4	
Q002:1	90259-0313		1	AUXILIARY CONTACT 072894 NHI21-PKZM0	
Q003	90459-5325		1	OVERLOAD PROTECTION, PKZM0-2,5	
Q003:1	90259-0313		1	AUXILIARY CONTACT 072894 NHI21-PKZM0	
Q004	90459-5325		1	OVERLOAD PROTECTION, PKZM0-2,5	
Q004:1	90259-0313		1	AUXILIARY CONTACT 072894 NHI21-PKZM0	
Q005	90459-5326		1	OVERLOAD PROTECTION, PKZM0-4	
Q005:1	90259-0313		1	AUXILIARY CONTACT 072894 NHI21-PKZM0	
Q006	90459-5330		1	OVERLOAD PROTECTION, PKZM0-16	
Q006:1	90259-0313		1	AUXILIARY CONTACT 072894 NHI21-PKZM0	
Q007	90459-5324		1	OVERLOAD PROTECTION, PKZM0-1,6	
Q007:1	90259-0313		1	AUXILIARY CONTACT 072894 NHI21-PKZM0	
Q008	90459-5328		1	OVERLOAD PROTECTION, PKZM0-10	
Q008:1	90259-0313		1	AUXILIARY CONTACT 072894 NHI21-PKZM0	
Q009	90459-5323		1	OVERLOAD PROTECTION, PKZM0-1	
Q009:1	90259-0313		1	AUXILIARY CONTACT 072894 NHI21-PKZM0	

Pos	Part No	UN	Qty	Description	Page No

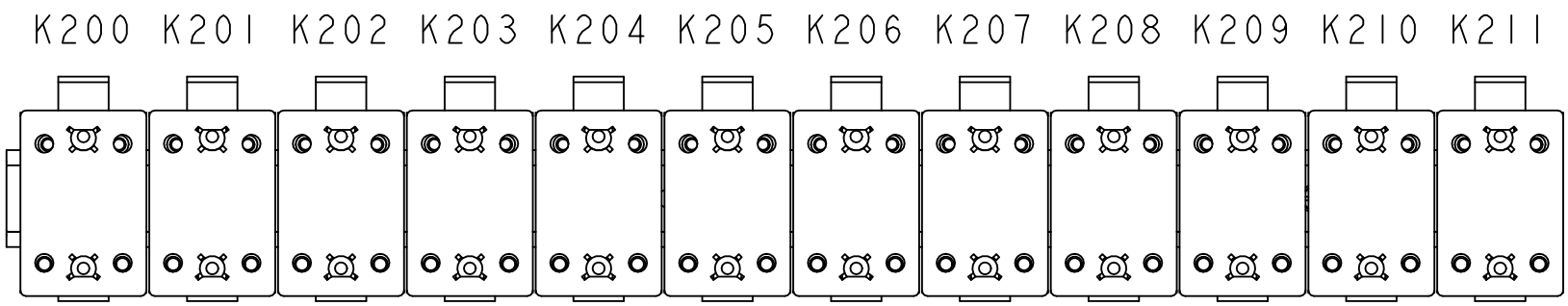
K200 K201 K202 K203 K204 K205 K206 K207 K208 K209 K210 K211

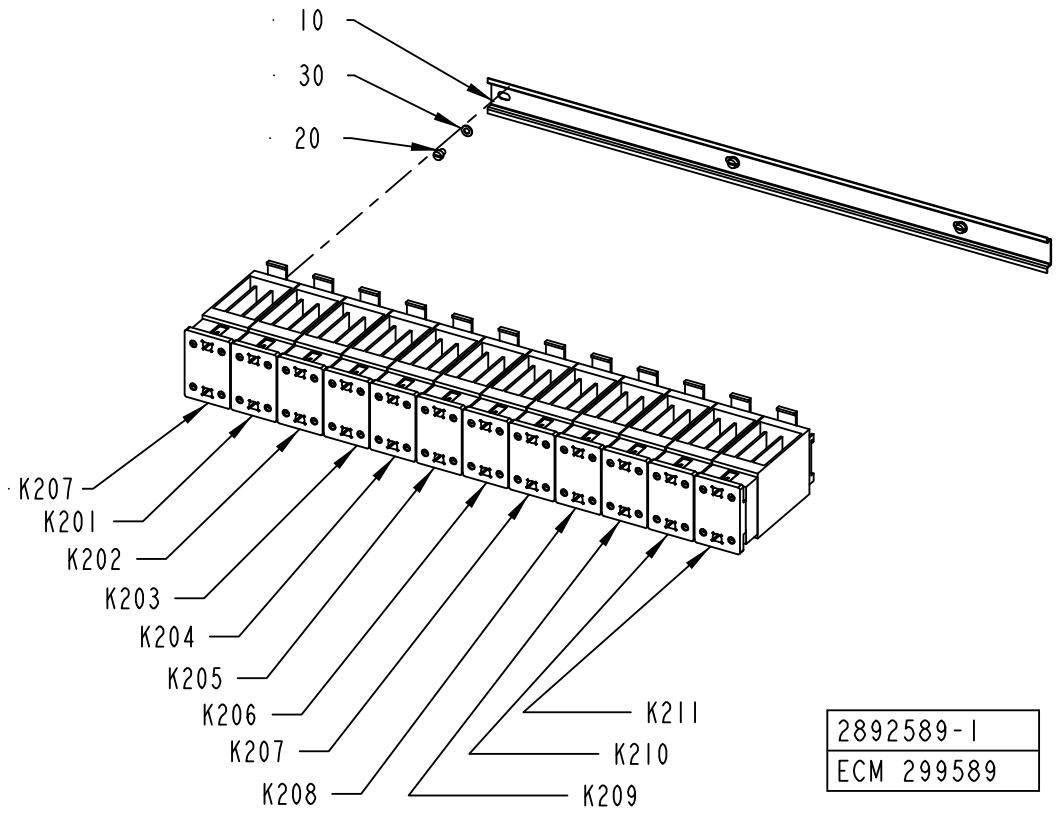
10
30
20
K207
K201
K202
K203
K204
K205
K206
K207
K208
K211
K210
K209
2892589-1
ECM 299589

ECM: 305438 - 20070701
Group number: 2892589-0100
Assembly Drawing: 2892589-1_1_AA

Pos	Part No	UN	Qty	Description	Page No
-					
10	2892602-0000		1	RAIL	
20	312121-0321		3	SCREW ISO 1207 M5X6 4.8-5.8 Z.PL.	
30	315101-0146		3	WASHER PLAIN, BRB, 5,3/10 H=1	
K202	90119-0082		1	SSR 90119-67 + HEAT SINK	
K203	90119-0082		1	SSR 90119-67 + HEAT SINK	
K204	90119-0082		1	SSR 90119-67 + HEAT SINK	
K205	90119-0082		1	SSR 90119-67 + HEAT SINK	
K206	90119-0082		1	SSR 90119-67 + HEAT SINK	
K207	90119-0082		1	SSR 90119-67 + HEAT SINK	
K208	90119-0082		1	SSR 90119-67 + HEAT SINK	
K209	90119-0082		1	SSR 90119-67 + HEAT SINK	
K210	90119-0082		1	SSR 90119-67 + HEAT SINK	
K211	90119-0082		1	SSR 90119-67 + HEAT SINK	
K213	90119-0082		1	SSR 90119-67 + HEAT SINK	
K214	90119-0082		1	SSR 90119-67 + HEAT SINK	

Pos	Part No	UN	Qty	Description	Page No

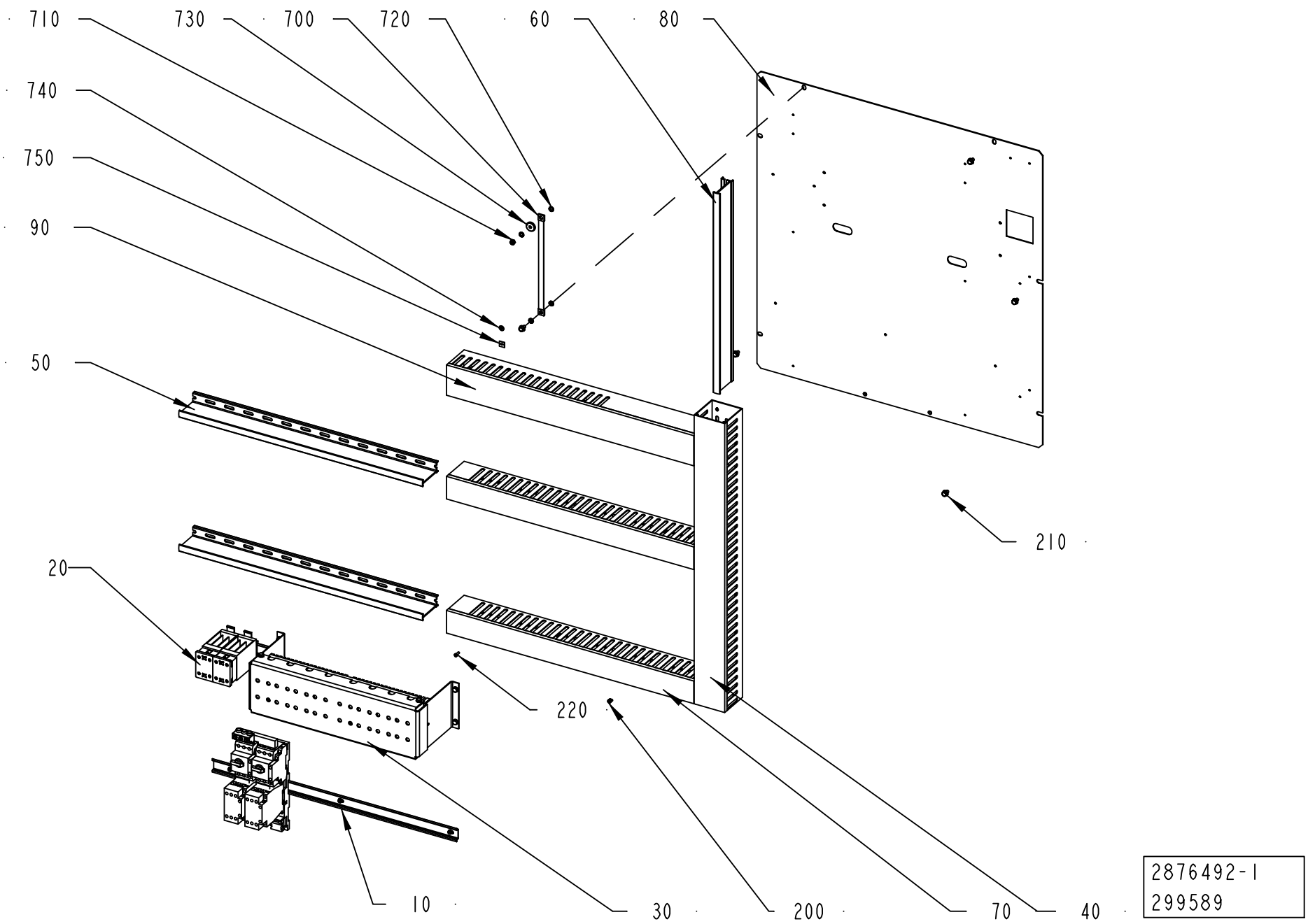
710
730
700
720
60
80
740
750
90
50
210
20
220
10
30
200
70
40
2876492-1
299589

ECM: 340646 - 20080215
Group number: 2876492-0100
Assembly Drawing: 2876492-1_1_AA

This list covers pages from 9-110 to 9-113

Pos	Part No	UN	Qty	Description	Page No
A3/FLEX TBA, A3/FLEX TPA (See drawing on page: 9-110)					
10	2876484-0100		1	FUSE BOARD 1	**9-115**
20	2876482-0100		1	RELAY UNIT 1	**9-117, 9-119**
30	1548129-0100		1	RELAY UNIT 2	**9-121**
A3/FLEX TGA (See drawing on page: 9-112)					
10	2876484-0100		1	FUSE BOARD 1	**9-115**
20	2876482-0100		1	RELAY UNIT 1	**9-117, 9-119**
30	1548129-0100		1	RELAY UNIT 2	**9-121**
Common Parts					
200	90181-0064		7	LOCK ZP1 FOR CHANNEL T1	
210	90287-0157		6	SCREW M6SF FLAT HEAD M6X10 88	
220	90287-0124		14	SCREW PAN HEAD MSCS M4X12 NYLON	
40	2892583-0000		1	CABLE DUCT	
50	2892593-0000		2	DIVIDER	
60	2889868-0000		1	DIVIDER	
70	2889869-0000		2	CABLE DUCT 60X80MM	
700	90135-0035		1	EARTH WIRE, L=250 MM 16 MM2	
710	312601-0316		1	HEXAGON NUT, DIN 934 M6 8 FZB	
720	90062-0015		4	LOCK WASHER SERRAT.EXT.GEAR,6,4/11 H=0,7	
730	315125-0153		1	WASHER TBRSB 6,4X22X4 A4	
740	2608177-0000		1	SIGN	
750	90194-0152		1	SIGN, EARTH	
80	2892575-0000		1	MOUNTING PLATE	
90	2889870-0000		1	CABLE DUCT 80X80MM	

Pos	Part No	UN	Qty	Description	Page No

Machine Type | Group Description | Used-In | Group Number | Page No

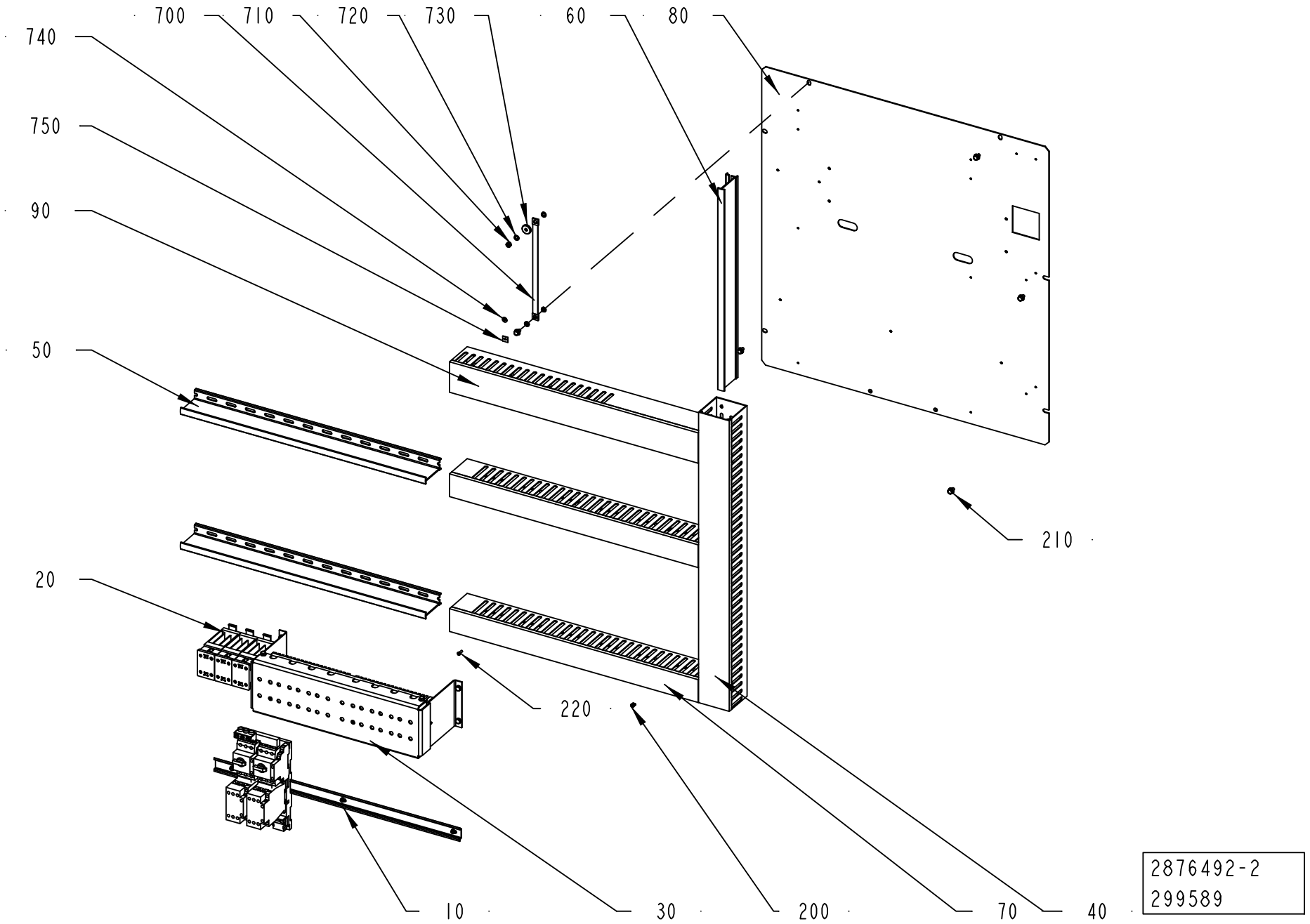
700
710
720
730
60
80
740
750
90
50
210
20
220
10
30
200
70
40
2876492-2
299589

ECM: 340646 - 20080215
Group number: 2876492-0100
Assembly Drawing: 2876492-2_1_AA

This list covers pages from 9-110 to 9-113

Pos	Part No	UN	Qty	Description	Page No
A3/FLEX TBA, A3/FLEX TPA (See drawing on page: 9-110)					
10	2876484-0100		1	FUSE BOARD 1	**9-115**
20	2876482-0100		1	RELAY UNIT 1	**9-117, 9-119**
30	1548129-0100		1	RELAY UNIT 2	**9-121**
A3/FLEX TGA (See drawing on page: 9-112)					
10	2876484-0100		1	FUSE BOARD 1	**9-115**
20	2876482-0100		1	RELAY UNIT 1	**9-117, 9-119**
30	1548129-0100		1	RELAY UNIT 2	**9-121**
Common Parts					
200	90181-0064		7	LOCK ZP1 FOR CHANNEL T1	
210	90287-0157		6	SCREW M6SF FLAT HEAD M6X10 88	
220	90287-0124		14	SCREW PAN HEAD MSCS M4X12 NYLON	
40	2892583-0000		1	CABLE DUCT	
50	2892593-0000		2	DIVIDER	
60	2889868-0000		1	DIVIDER	
70	2889869-0000		2	CABLE DUCT 60X80MM	
700	90135-0035		1	EARTH WIRE, L=250 MM 16 MM2	
710	312601-0316		1	HEXAGON NUT, DIN 934 M6 8 FZB	
720	90062-0015		4	LOCK WASHER SERRAT.EXT.GEAR,6,4/11 H=0,7	
730	315125-0153		1	WASHER TBRSB 6,4X22X4 A4	
740	2608177-0000		1	SIGN	
750	90194-0152		1	SIGN, EARTH	
80	2892575-0000		1	MOUNTING PLATE	
90	2889870-0000		1	CABLE DUCT 80X80MM	

Pos	Part No	UN	Qty	Description	Page No

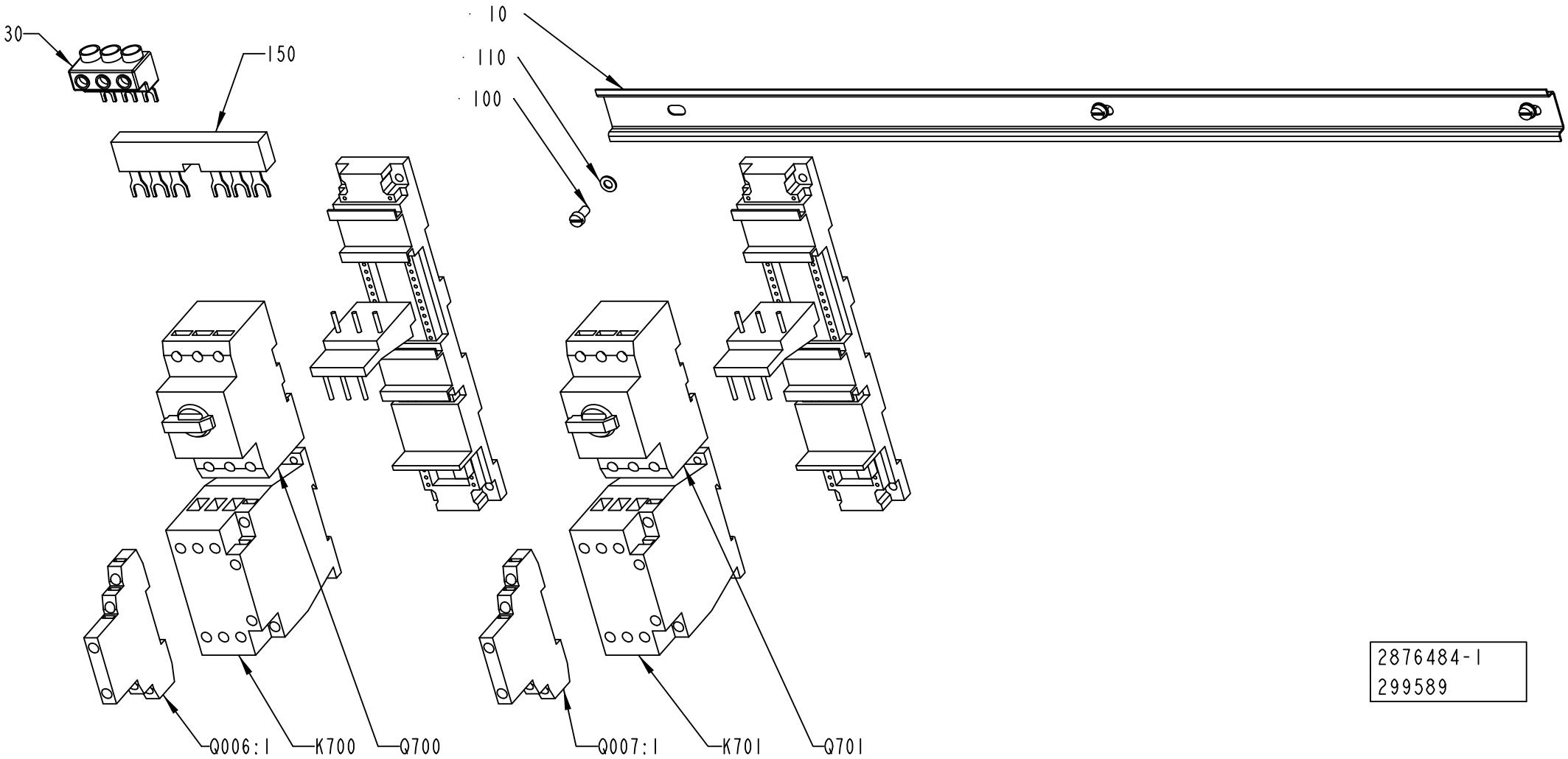

2876484-1
299589

ECM: 305442 - 20070701
Group number: 2876484-0100
Assembly Drawing: 2876484-1_1_AA

Pos	Part No	UN	Qty	Description	Page No
-					
10	2892596-0000		1	RAIL	
100	312125-0325		3	SCREW ISO 1207 M5X10 A4	
110	315105-0146		3	WASHER BRB 5,3X10 RFR	
150	90600-1203		1	BUS BAR 3-POLE+AUX. CONT., B3.1/2-PKZ0	
30	90458-0577		1	CONNECTION TERMINAL BK 25/3-PKZ 0	
40	90459-6851		2	BASE UNIT, PKZM0-XDM32	
K700	90459-5444		1	CONTACTOR 15KW 24VDC, DILM32-01	
K701	90459-5444		1	CONTACTOR 15KW 24VDC, DILM32-01	
Q700	90459-5333		1	OVERLOAD PROTECTION, PKZM0-32	
Q700:1	90259-0313		1	AUXILIARY CONTACT 072894 NHI21-PKZM0	
Q701	90459-5333		1	OVERLOAD PROTECTION, PKZM0-32	
Q701:1	90259-0313		1	AUXILIARY CONTACT 072894 NHI21-PKZM0	

Pos	Part No	UN	Qty	Description	Page No

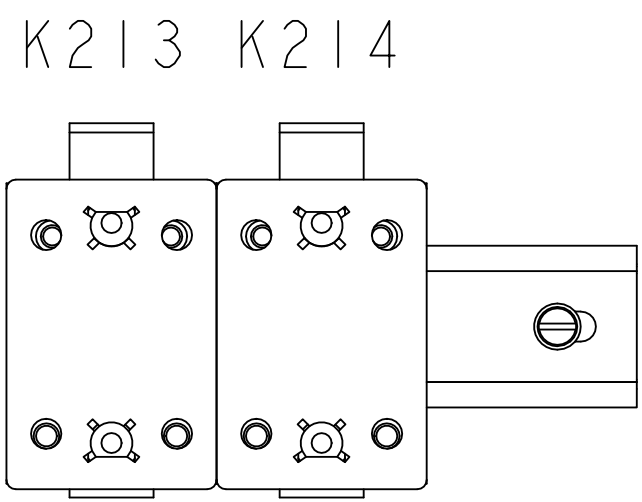
K213 K214

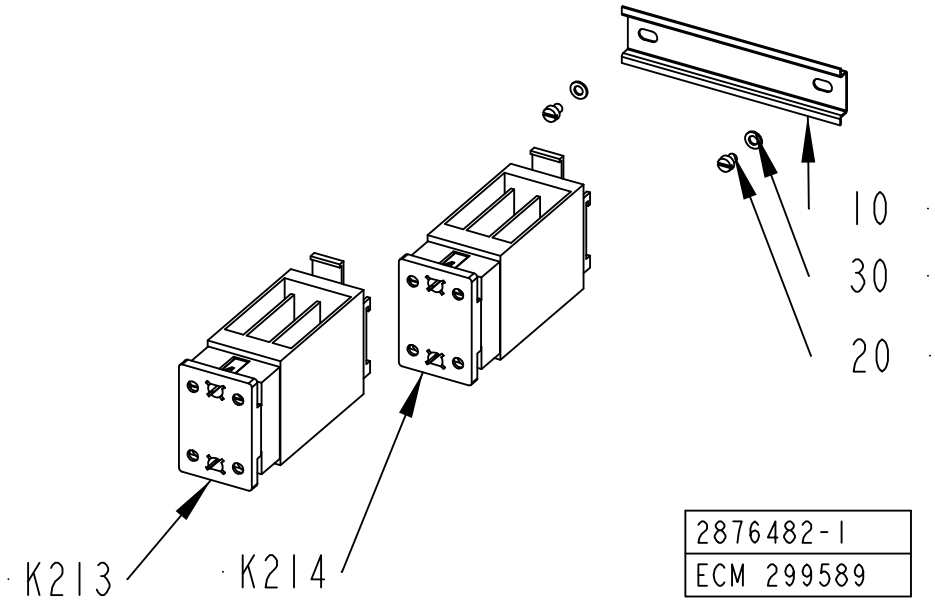
10
30
20
K213
K214
2876482-1
ECM 299589

ECM: 305443 - 20070701
Group number: 2876482-0100
Assembly Drawing: 2876482-1_1_AA

This list covers pages from 9-116 to 9-119

Pos	Part No	UN	Qty	Description	Page No
A3/FLEX TGA (See drawing on pages: 9-116, 9-118)					
K212	90119-0082		1	SSR 90119-67 + HEAT SINK	
Common Parts					
10	2892595-0000		1	RAIL	
20	312121-0321		2	SCREW ISO 1207 M5X6 4.8-5.8 Z.PL.	
30	315101-0146		2	WASHER PLAIN, BRB, 5,3/10 H=1	
K213	90119-0082		1	SSR 90119-67 + HEAT SINK	
K214	90119-0082		1	SSR 90119-67 + HEAT SINK	

Pos	Part No	UN	Qty	Description	Page No

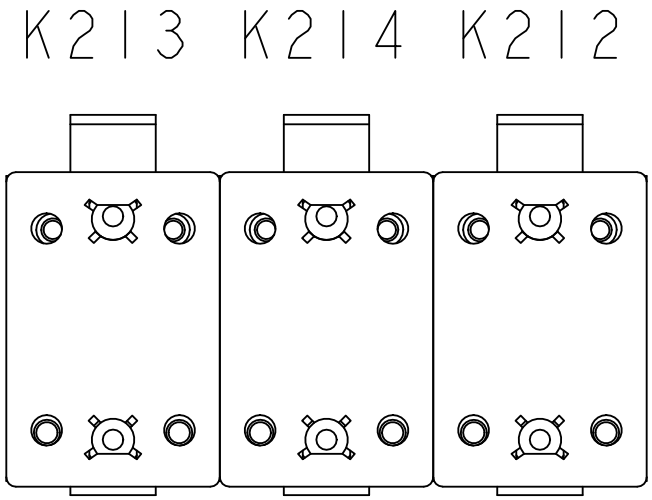
K213 K214 K212

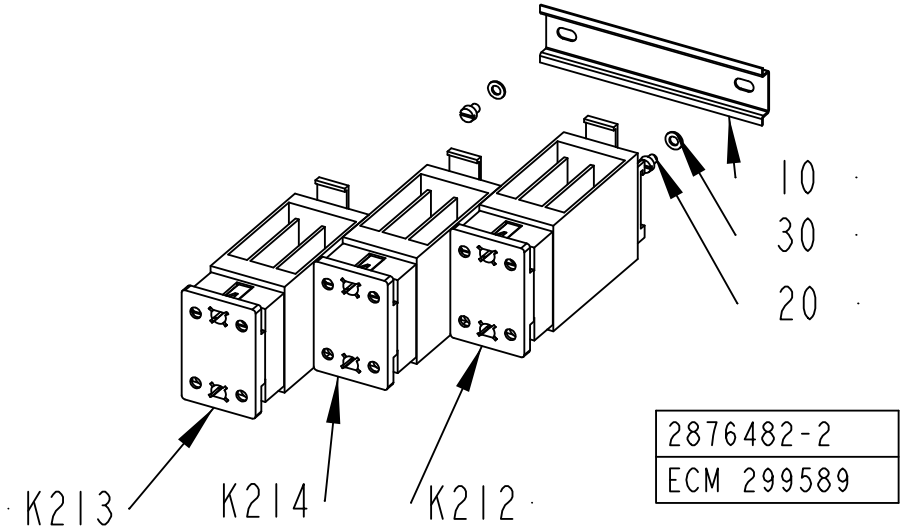
10
30
20
K213
K214
K212
2876482-2
ECM 299589

ECM: 305443 - 20070701
Group number: 2876482-0100
Assembly Drawing: 2876482-2_1_AA

This list covers pages from 9-116 to 9-119

Pos	Part No	UN	Qty	Description	Page No
A3/FLEX TGA (See drawing on pages: 9-116, 9-118)					
K212	90119-0082		1	SSR 90119-67 + HEAT SINK	
Common Parts					
10	2892595-0000		1	RAIL	
20	312121-0321		2	SCREW ISO 1207 M5X6 4.8-5.8 Z.PL.	
30	315101-0146		2	WASHER PLAIN, BRB, 5,3/10 H=1	
K213	90119-0082		1	SSR 90119-67 + HEAT SINK	
K214	90119-0082		1	SSR 90119-67 + HEAT SINK	

Pos	Part No	UN	Qty	Description	Page No

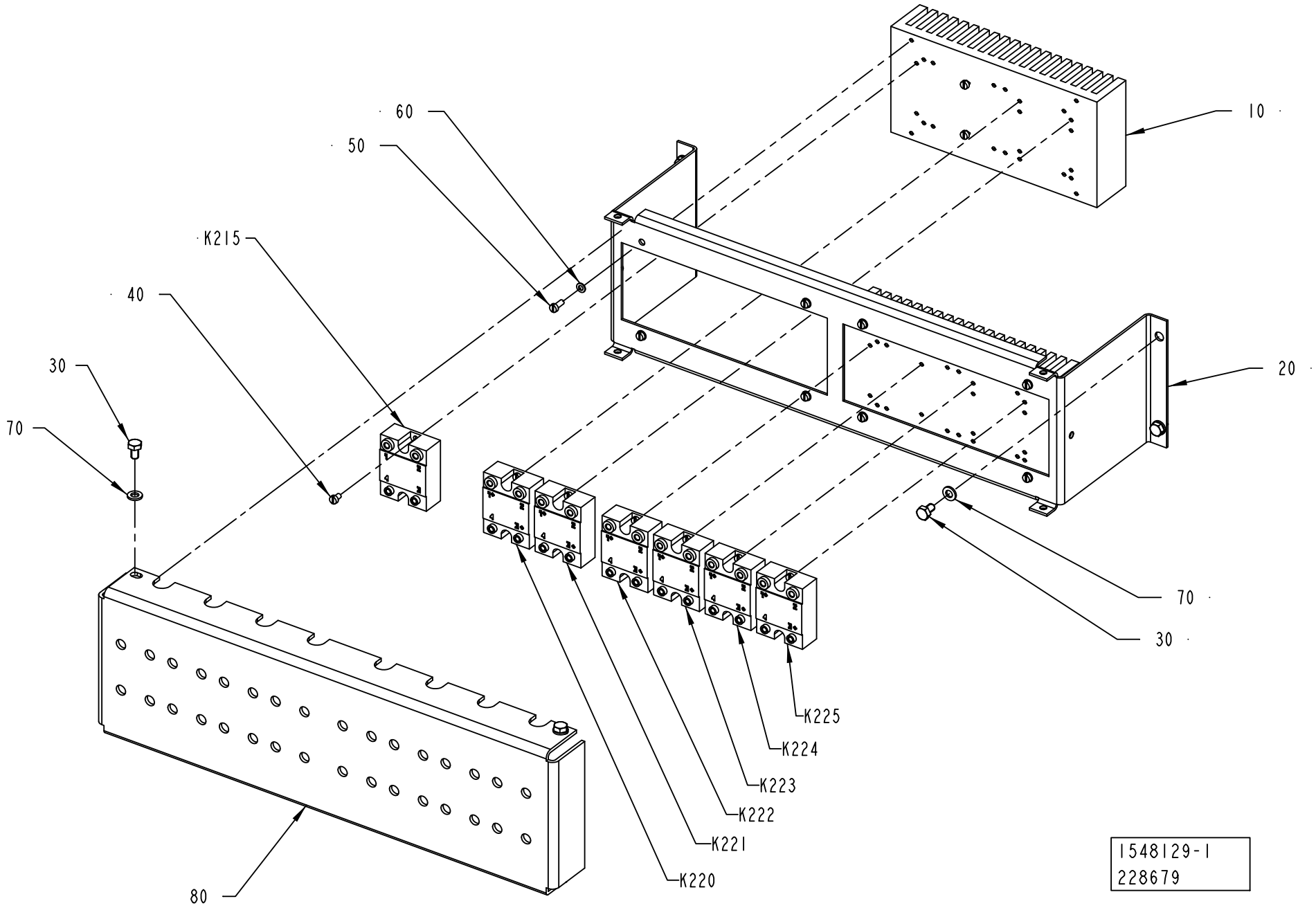
60
50
K215
40
30
70
10
20
70
30
K225
K224
K223
K222
K221
K220
80
1548129-1
228679

ECM: 234967 - 20060101
Group number: 1548129-0100
Assembly Drawing: 1548129-1_1_AC

Pos	Part No	UN	Qty	Description	Page No
A3/FLEX					
K215	90119-0067		1	SOLID-STATE RELAY, H12WD4850	
Common Parts					
010	495495-0000		2	COOLING ELEMENT SSR	
020	1347673-0000		1	BRACKET	
030	312101-0364		8	SCREW M6S M6X10 FZB	
040	312121-0285		16	SCREW ISO 1207 M4X6 4.8-5.8 Z.PL.	
050	312121-0289		8	SCREW ISO 1207 M4X10 4.8-5.8 Z.PL.	
060	315101-0136		8	WASHER BRB, 4,3/8 H=0,8	
070	315101-0153		8	WASHER PLAIN, BRB, 6,4/12 H=1,5	
080	1129342-0000		1	PROTECTION	
K220	90119-0043		1	OPTO-RELAY, 22DC 60S-3/32VDC	
K221	90119-0043		1	OPTO-RELAY, 22DC 60S-3/32VDC	
K222	90119-0043		1	OPTO-RELAY, 22DC 60S-3/32VDC	
K223	90119-0043		1	OPTO-RELAY, 22DC 60S-3/32VDC	
K224	90119-0043		1	OPTO-RELAY, 22DC 60S-3/32VDC	
K225	90119-0043		1	OPTO-RELAY, 22DC 60S-3/32VDC	

Pos	Part No	UN	Qty	Description	Page No

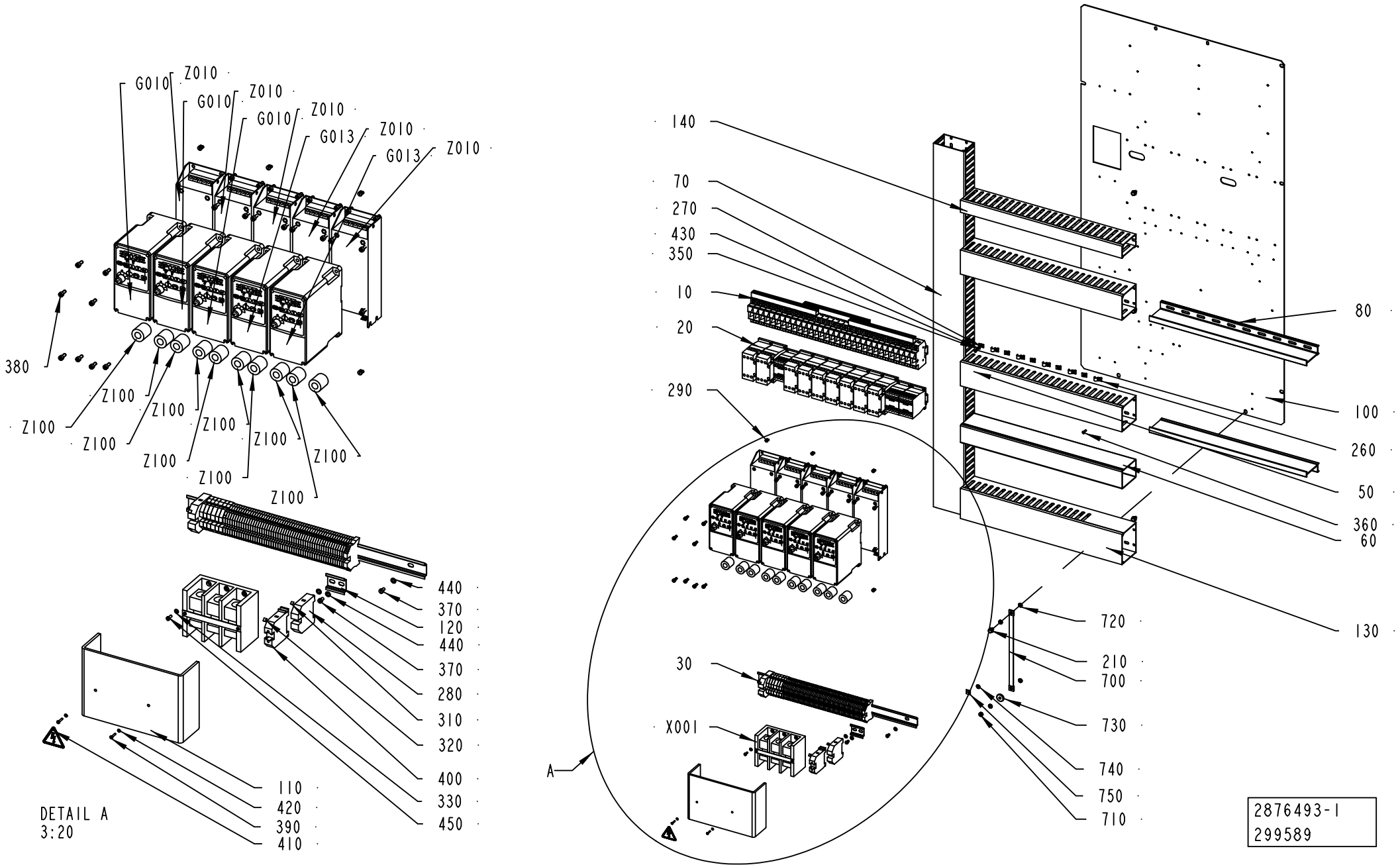
G010
Z010
G013
380
Z100
440
370
120
280
310
320
400
330
450
110
420
390
410
DETAIL A
3:20
140
70
270
430
350
10
20
290
80
100
260
50
360
60
130
720
210
700
730
740
750
710
30
X001
A
2876493-1
299589

ECM: 385731 - 20090402
Group number: 2876493-0100
Assembly Drawing: 2876493-1_1_AA

This list covers pages from 9-122 to 9-125

Pos	Part No	UN	Qty	Description	Page No
A3/FLEX TBA, A3/FLEX TPA (See drawing on page: 9-122)					
10	2892587-0100		1	FUSE BOARD 2	**9-127, 9-129**
20	2892588-0100		1	FUSE BOARD 3	**9-131**
30	1548133-0100		1	PLINTH	**9-133**
G010	90459-3449		1	VARIABLE FREQUENCY DRIVE 22A-A2P3N104	
G011	90459-3449		1	VARIABLE FREQUENCY DRIVE 22A-A2P3N104	
G012	90459-3449		1	VARIABLE FREQUENCY DRIVE 22A-A2P3N104	
G013	90459-3450		1	VARIABLE FREQUENCY DRIVE 22A-A4P5N104	
G014	90459-3450		1	VARIABLE FREQUENCY DRIVE 22A-A4P5N104	
Z010	90459-3460		1	FOOTPRINT FILTER 22-RF010-AL	
Z011	90459-3460		1	FOOTPRINT FILTER 22-RF010-AL	
Z012	90459-3460		1	FOOTPRINT FILTER 22-RF010-AL	
Z013	90459-3460		1	FOOTPRINT FILTER 22-RF010-AL	
Z014	90459-3460		1	FOOTPRINT FILTER 22-RF010-AL	
Z100	90458-1140		1	FERRITE, RI-26-28-13	
Z101	90458-1140		1	FERRITE, RI-26-28-13	
Z110	90458-1140		1	FERRITE, RI-26-28-13	
Z111	90458-1140		1	FERRITE, RI-26-28-13	
Z120	90458-1140		1	FERRITE, RI-26-28-13	
Z121	90458-1140		1	FERRITE, RI-26-28-13	
Z130	90458-1140		1	FERRITE, RI-26-28-13	
Z131	90458-1140		1	FERRITE, RI-26-28-13	
Z140	90458-1140		1	FERRITE, RI-26-28-13	
Z141	90458-1140		1	FERRITE, RI-26-28-13	
A3/FLEX TGA (See drawing on page: 9-124)					
10	2892587-0100		1	FUSE BOARD 2	**9-127, 9-129**
20	2892588-0100		1	FUSE BOARD 3	**9-131**
30	1548133-0100		1	PLINTH	**9-133**
G010	90459-3449		1	VARIABLE FREQUENCY DRIVE 22A-A2P3N104	
G011	90459-3449		1	VARIABLE FREQUENCY DRIVE 22A-A2P3N104	
G012	90459-3449		1	VARIABLE FREQUENCY DRIVE 22A-A2P3N104	
G013	90459-3450		1	VARIABLE FREQUENCY DRIVE 22A-A4P5N104	
G014	90459-3450		1	VARIABLE FREQUENCY DRIVE 22A-A4P5N104	
Z010	90459-3460		1	FOOTPRINT FILTER 22-RF010-AL	
Z011	90459-3460		1	FOOTPRINT FILTER 22-RF010-AL	
Z012	90459-3460		1	FOOTPRINT FILTER 22-RF010-AL	
Z013	90459-3460		1	FOOTPRINT FILTER 22-RF010-AL	
Z014	90459-3460		1	FOOTPRINT FILTER 22-RF010-AL	
Z100	90458-1140		1	FERRITE, RI-26-28-13	
Z101	90458-1140		1	FERRITE, RI-26-28-13	
Z110	90458-1140		1	FERRITE, RI-26-28-13	
Z111	90458-1140		1	FERRITE, RI-26-28-13	
Z120	90458-1140		1	FERRITE, RI-26-28-13	
Z121	90458-1140		1	FERRITE, RI-26-28-13	
Z130	90458-1140		1	FERRITE, RI-26-28-13	
Z131	90458-1140		1	FERRITE, RI-26-28-13	
Z140	90458-1140		1	FERRITE, RI-26-28-13	
Z141	90458-1140		1	FERRITE, RI-26-28-13	
Common Parts					
100	2876480-0000		1	MOUNTING PLATE	
110	2844054-0000		1	PROTECTION	
120	2789106-0000		1	RAIL	
130	2889872-0000		1	CABLE DUCT 100X80MM	
140	2889873-0000		1	CABLE DUCT 40X80MM	
210	90287-0157		1	SCREW M6SF FLAT HEAD M6X10 88	
260	90165-0007		5	PIPE CLIP FOR TUBE D=8 MM	
270	90165-0022		5	PIPE CLIP, FOR TUBE D=2,5 MM, B-3570	
280	353024-0209		1	EARTH TERMINAL, 1010.5	
290	90181-0064		6	LOCK ZP1 FOR CHANNEL T1	
310	359011-0819		1	MARKING PLATES 5-GW (EARTH)	
320	359011-0821		1	SET OF SIGNS 6-FW 1-50	
330	315105-0136		6	WASHER BRB 4,3X8 RFR	
340	90287-0157		6	SCREW M6SF FLAT HEAD M6X10 88	
350	312121-0289		10	SCREW ISO 1207 M4X10 4.8-5.8 Z.PL.	
360	90287-0124		26	SCREW PAN HEAD MSCS M4X12 NYLON	
370	312121-0323		5	SCREW ISO 1207 M5X8 4.8-5.8 Z.PL.	
380	312115-0327		40	SCREW ISO4762 M5X12 A4 80	
390	312503-0229		2	TAPPING SCREW ISO 7049-ST2,9X16-C-Z	
400	353021-0226		1	BY-PASS TERMINAL WDU 35	
410	359705-0015		1	WARNING SIGN ISO, RISK OF ELECTRIC SHOCK	
420	315105-0124		2	WASHER BRB 3,2X6 RFR	
430	315101-0136		10	WASHER BRB, 4,3/8 H=0,8	
440	315101-0146		5	WASHER PLAIN, BRB, 5,3/10 H=1	
450	312125-0289		6	SCREW ISO 1207 M4X10 A4	
50	2892582-0000		2	CABLE DUCT	
60	2892581-0000		1	CABLE DUCT	
70	2876495-0000		1	CABLE DUCT	
700	90135-0035		1	EARTH WIRE, L=250 MM 16 MM2	
710	312601-0316		1	HEXAGON NUT, DIN 934 M6 8 FZB	
720	90062-0015		4	LOCK WASHER SERRAT.EXT.GEAR,6,4/11 H=0,7	
730	315125-0153		1	WASHER TBRSB 6,4X22X4 A4	
740	2608177-0000		1	SIGN	
750	90194-0152		1	SIGN, EARTH	
80	2889871-0000		2	DIVIDER	

Machine Type | Group Description | Used-In | Group Number | Page No

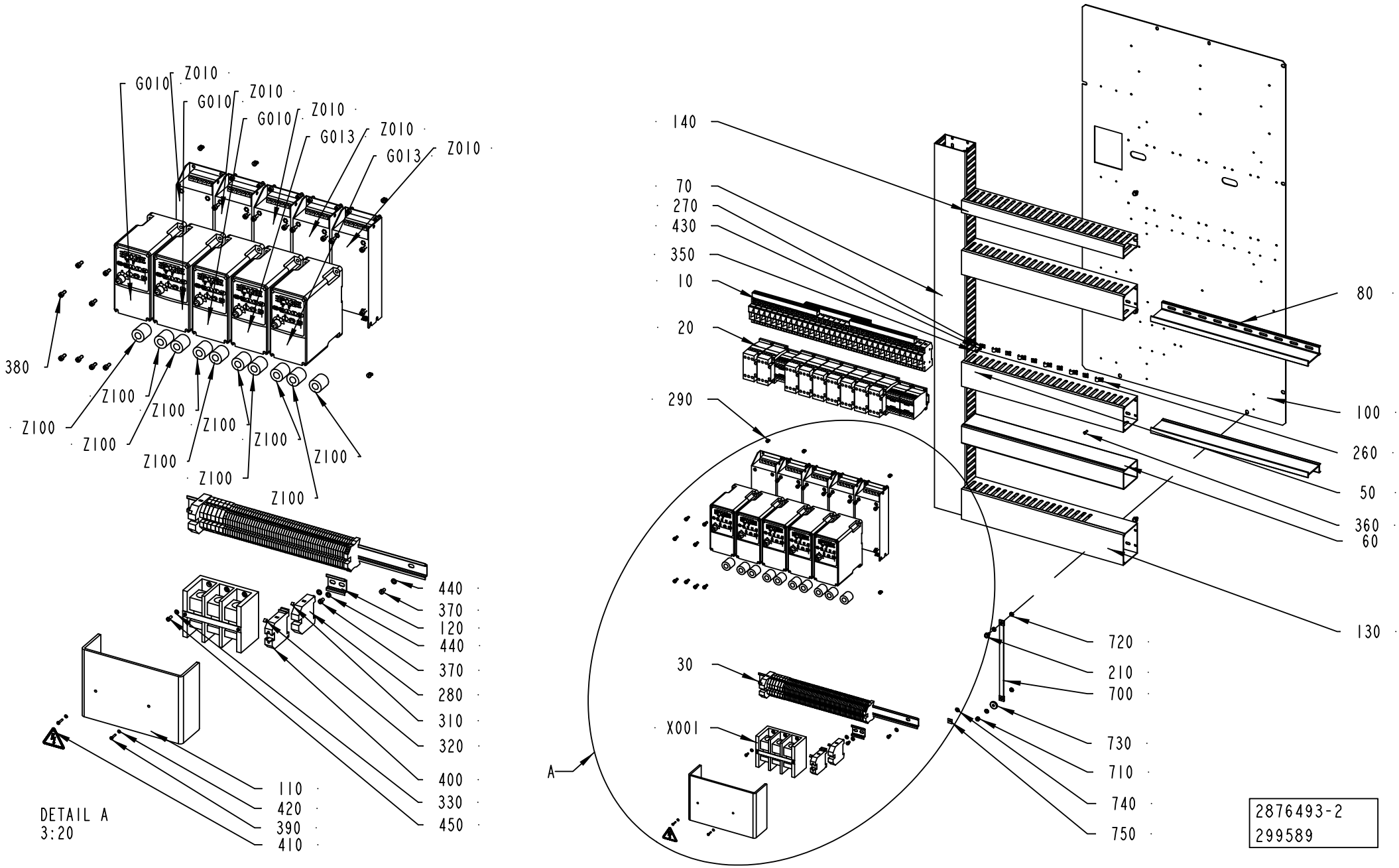
G010
Z010
G013
Z100
380
110
420
390
410
440
370
120
280
310
320
400
330
450
DETAIL A
3:20
140
70
270
430
350
10
20
290
80
100
260
50
360
60
130
720
210
700
730
710
740
750
30
X001
A
2876493-2
299589

Pos	Part No	UN	Qty	Description	Page No
Common Parts (Cont'd)					
X001	90459-0959		1	DISTRIBUTOR BLOCK 1492-PD3163	

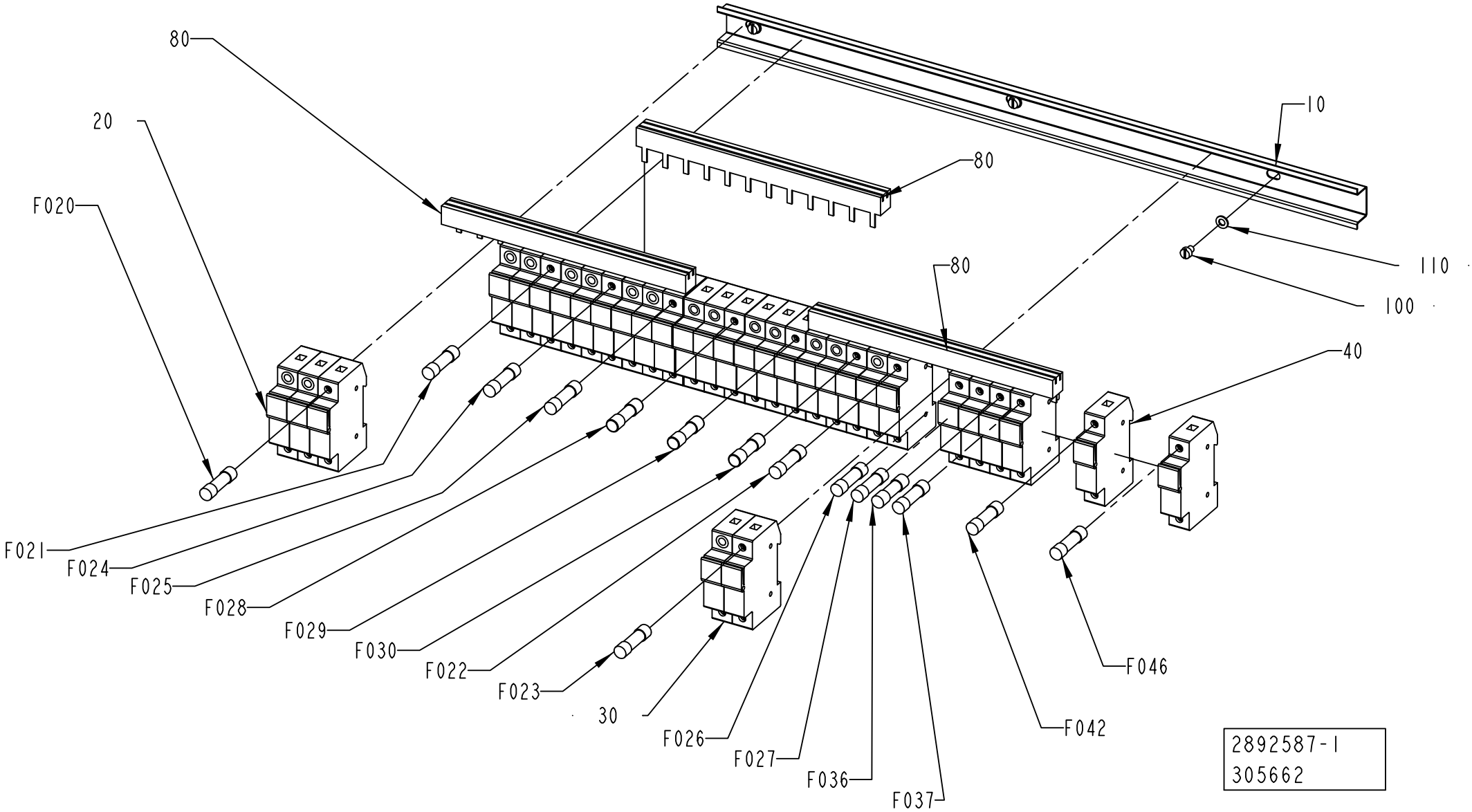
80
20
F020
80
10
80
110
100
40
F021
F024
F025
F028
F029
F030
F022
F023
30
F026
F027
F036
F037
F042
F046
2892587-1
305662

ECM: 360662 - 20081001
Group number: 2892587-0100
Assembly Drawing: 2892587-1_1_AA

This list covers pages from 9-126 to 9-129

Pos	Part No	UN	Qty	Description	Page No
A3/FLEX TBA, A3/FLEX TPA (See drawing on page: 9-126)					
40	90600-4648		6	FUSE HOLDER CYLINDRICAL FUSE, CMS101SP	
F026	90233-0028		1	TUBE FUSE 10A, A070GRB10T13 G330010	
F046	90233-0028		1	TUBE FUSE 10A, A070GRB10T13 G330010	
A3/FLEX TGA (See drawing on page: 9-128)					
40	90459-3799		7	FUSE HOLDER, 1P MIDGET 30A 10*38 GSUS101	
F026	90233-0027		1	TUBE FUSE 16A, A070GRB16T13 J330012	
	90233-0305		*1*	*INDICATOR*	
F045	90233-0027		1	TUBE FUSE 16A, A070GRB16T13 J330012	
	90233-0305		*1*	*INDICATOR*	
F046	90233-0027		1	TUBE FUSE 16A, A070GRB16T13 J330012	
	90233-0305		*1*	*INDICATOR*	
Common Parts					
10	2892600-0000		1	RAIL	
100	312121-0321		3	SCREW ISO 1207 M5X6 4.8-5.8 Z.PL.	
110	315101-0146		3	WASHER PLAIN, BRB, 5,3/10 H=1	
20	90600-4650		7	FUSE HOLDER CYLINDRICAL FUSE, CMS103SP	
30	90600-4649		2	FUSE HOLDER CYLINDRICAL FUSE, CMS102SPR	
80	90459-6857		3	BUSBAR, 3-P 12 100A	
F020	90233-0028		3	TUBE FUSE 10A, A070GRB10T13 G330010	
F021	90233-0028		3	TUBE FUSE 10A, A070GRB10T13 G330010	
F022	90233-0029		2	TUBE FUSE 25A, A070GRB25T13 L330014	
F023	90233-0029		2	TUBE FUSE 25A, A070GRB25T13 L330014	
F024	90233-0028		3	TUBE FUSE 10A, A070GRB10T13 G330010	
F025	90233-0029		3	TUBE FUSE 25A, A070GRB25T13 L330014	
F027	90233-0027		1	TUBE FUSE 16A, A070GRB16T13 J330012	
	90233-0305		*1*	*INDICATOR*	
F028	90459-1254		3	TUBE FUSE, 4A 500V	
F029	90459-1254		3	TUBE FUSE, 4A 500V	
F030	90459-1254		3	TUBE FUSE, 4A 500V	
F036	90459-5687		1	FUSE 1 A 250 VAC	
F037	90233-0062		1	TUBE FUSE, 4A 600V	
F042	90233-0027		1	TUBE FUSE 16A, A070GRB16T13 J330012	
	90233-0305		*1*	*INDICATOR*	

Pos	Part No	UN	Qty	Description	Page No

Machine Type | Group Description | Used-In | Group Number | Page No

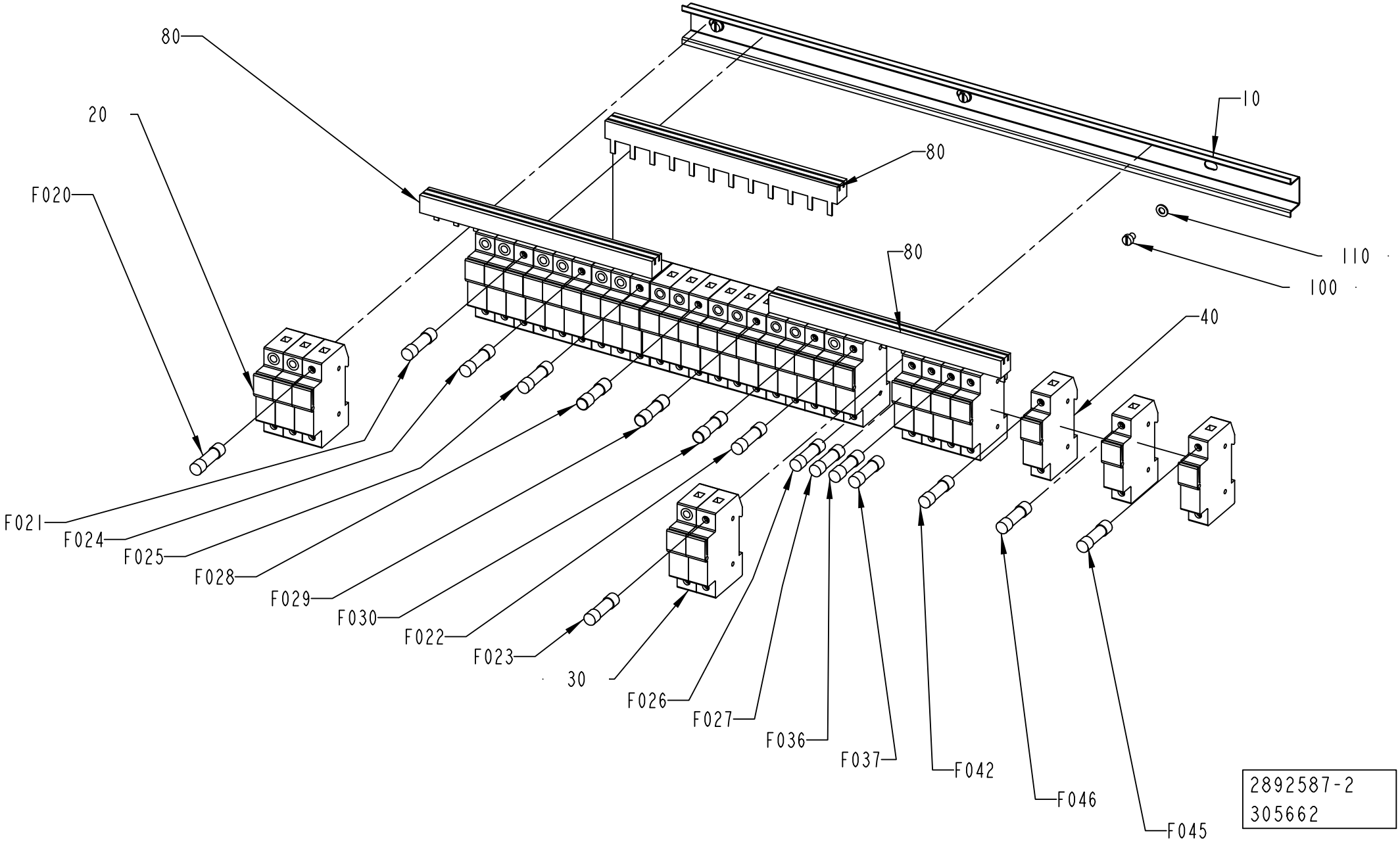
80
20
F020
80
10
80
110
100
40
F021
F024
F025
F028
F029
F030
F022
F023
30
F026
F027
F036
F037
F042
F046
F045
2892587-2
305662

ECM: 360662 - 20081001
Group number: 2892587-0100
Assembly Drawing: 2892587-2_1_AA

This list covers pages from 9-126 to 9-129

Pos	Part No	UN	Qty	Description	Page No
A3/FLEX TBA, A3/FLEX TPA (See drawing on page: 9-126)					
40	90600-4648		6	FUSE HOLDER CYLINDRICAL FUSE, CMS101SP	
F026	90233-0028		1	TUBE FUSE 10A, A070GRB10T13 G330010	
F046	90233-0028		1	TUBE FUSE 10A, A070GRB10T13 G330010	
A3/FLEX TGA (See drawing on page: 9-128)					
40	90459-3799		7	FUSE HOLDER, 1P MIDGET 30A 10*38 GSUS101	
F026	90233-0027		1	TUBE FUSE 16A, A070GRB16T13 J330012	
	90233-0305		*1*	*INDICATOR*	
F045	90233-0027		1	TUBE FUSE 16A, A070GRB16T13 J330012	
	90233-0305		*1*	*INDICATOR*	
F046	90233-0027		1	TUBE FUSE 16A, A070GRB16T13 J330012	
	90233-0305		*1*	*INDICATOR*	
Common Parts					
10	2892600-0000		1	RAIL	
100	312121-0321		3	SCREW ISO 1207 M5X6 4.8-5.8 Z.PL.	
110	315101-0146		3	WASHER PLAIN, BRB, 5,3/10 H=1	
20	90600-4650		7	FUSE HOLDER CYLINDRICAL FUSE, CMS103SP	
30	90600-4649		2	FUSE HOLDER CYLINDRICAL FUSE, CMS102SPR	
80	90459-6857		3	BUSBAR, 3-P 12 100A	
F020	90233-0028		3	TUBE FUSE 10A, A070GRB10T13 G330010	
F021	90233-0028		3	TUBE FUSE 10A, A070GRB10T13 G330010	
F022	90233-0029		2	TUBE FUSE 25A, A070GRB25T13 L330014	
F023	90233-0029		2	TUBE FUSE 25A, A070GRB25T13 L330014	
F024	90233-0028		3	TUBE FUSE 10A, A070GRB10T13 G330010	
F025	90233-0029		3	TUBE FUSE 25A, A070GRB25T13 L330014	
F027	90233-0027		1	TUBE FUSE 16A, A070GRB16T13 J330012	
	90233-0305		*1*	*INDICATOR*	
F028	90459-1254		3	TUBE FUSE, 4A 500V	
F029	90459-1254		3	TUBE FUSE, 4A 500V	
F030	90459-1254		3	TUBE FUSE, 4A 500V	
F036	90459-5687		1	FUSE 1 A 250 VAC	
F037	90233-0062		1	TUBE FUSE, 4A 600V	
F042	90233-0027		1	TUBE FUSE 16A, A070GRB16T13 J330012	
	90233-0305		*1*	*INDICATOR*	

Pos	Part No	UN	Qty	Description	Page No

Machine Type | Group Description | Used-In | Group Number | Page No

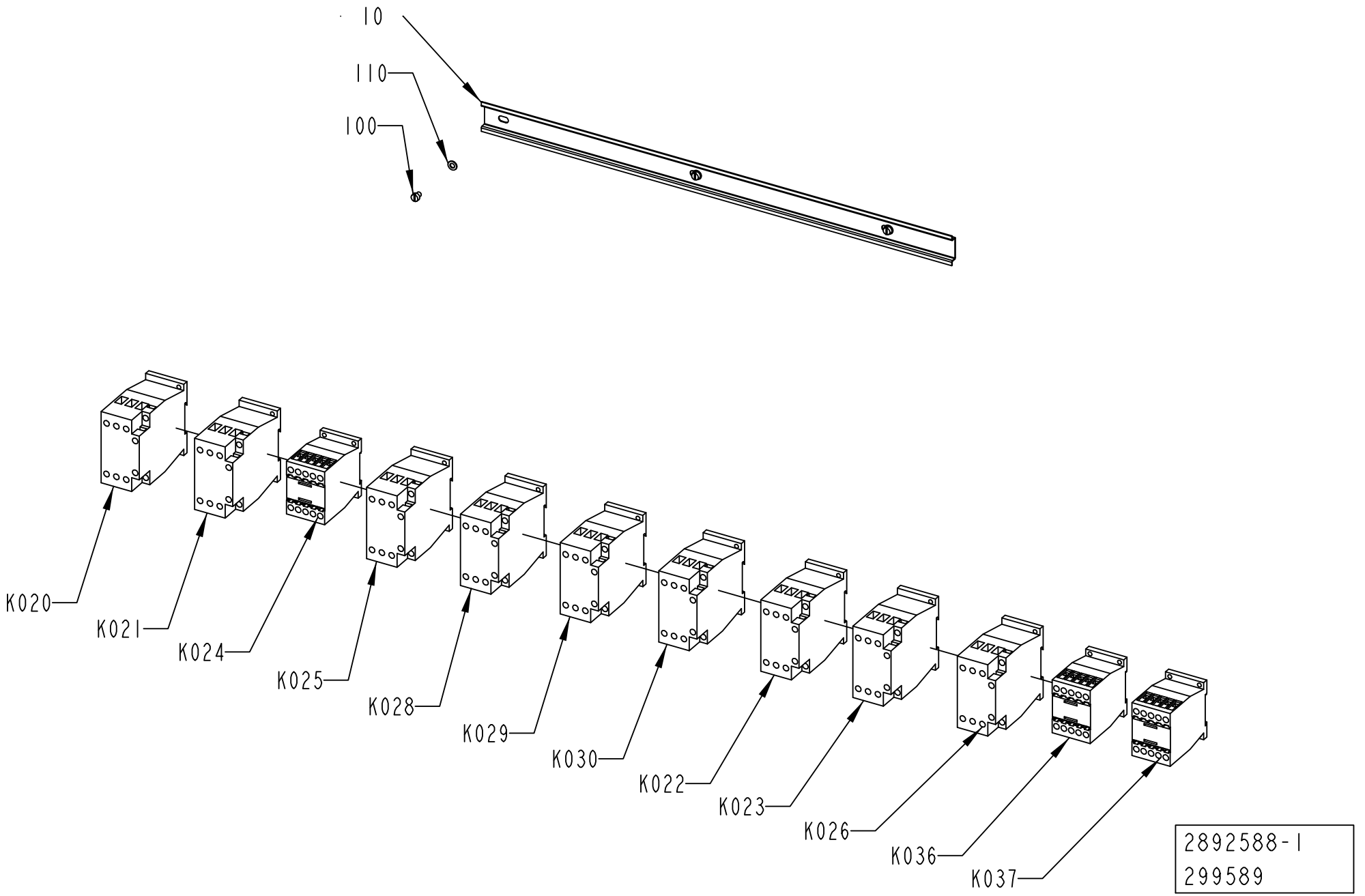
10
110
100
K020
K021
K024
K025
K028
K029
K030
K022
K023
K026
K036
K037
2892588-1
299589

ECM: 305439 - 20070701
Group number: 2892588-0100
Assembly Drawing: 2892588-1_1_AA

Pos	Part No	UN	Qty	Description	Page No
-					
10	2892601-0000		1	RAIL	
100	312121-0321		3	SCREW ISO 1207 M5X6 4.8-5.8 Z.PL.	
110	315101-0146		3	WASHER PLAIN, BRB, 5,3/10 H=1	
K020	90459-5441		1	CONTACTOR 7,5KW 24VDC, DILM17-01	
K021	90459-5441		1	CONTACTOR 7,5KW 24VDC, DILM17-01	
K022	90459-5441		1	CONTACTOR 7,5KW 24VDC, DILM17-01	
K023	90459-5441		1	CONTACTOR 7,5KW 24VDC, DILM17-01	
K024	90459-5440		1	CONTACTOR 4KW 24VDC, DILM9-01	
K025	90459-5441		1	CONTACTOR 7,5KW 24VDC, DILM17-01	
K026	90459-5441		1	CONTACTOR 7,5KW 24VDC, DILM17-01	
K028	90459-5441		1	CONTACTOR 7,5KW 24VDC, DILM17-01	
K029	90459-5441		1	CONTACTOR 7,5KW 24VDC, DILM17-01	
K030	90459-5441		1	CONTACTOR 7,5KW 24VDC, DILM17-01	
K036	90459-5440		1	CONTACTOR 4KW 24VDC, DILM9-01	
K037	90459-5440		1	CONTACTOR 4KW 24VDC, DILM9-01	

Pos	Part No	UN	Qty	Description	Page No

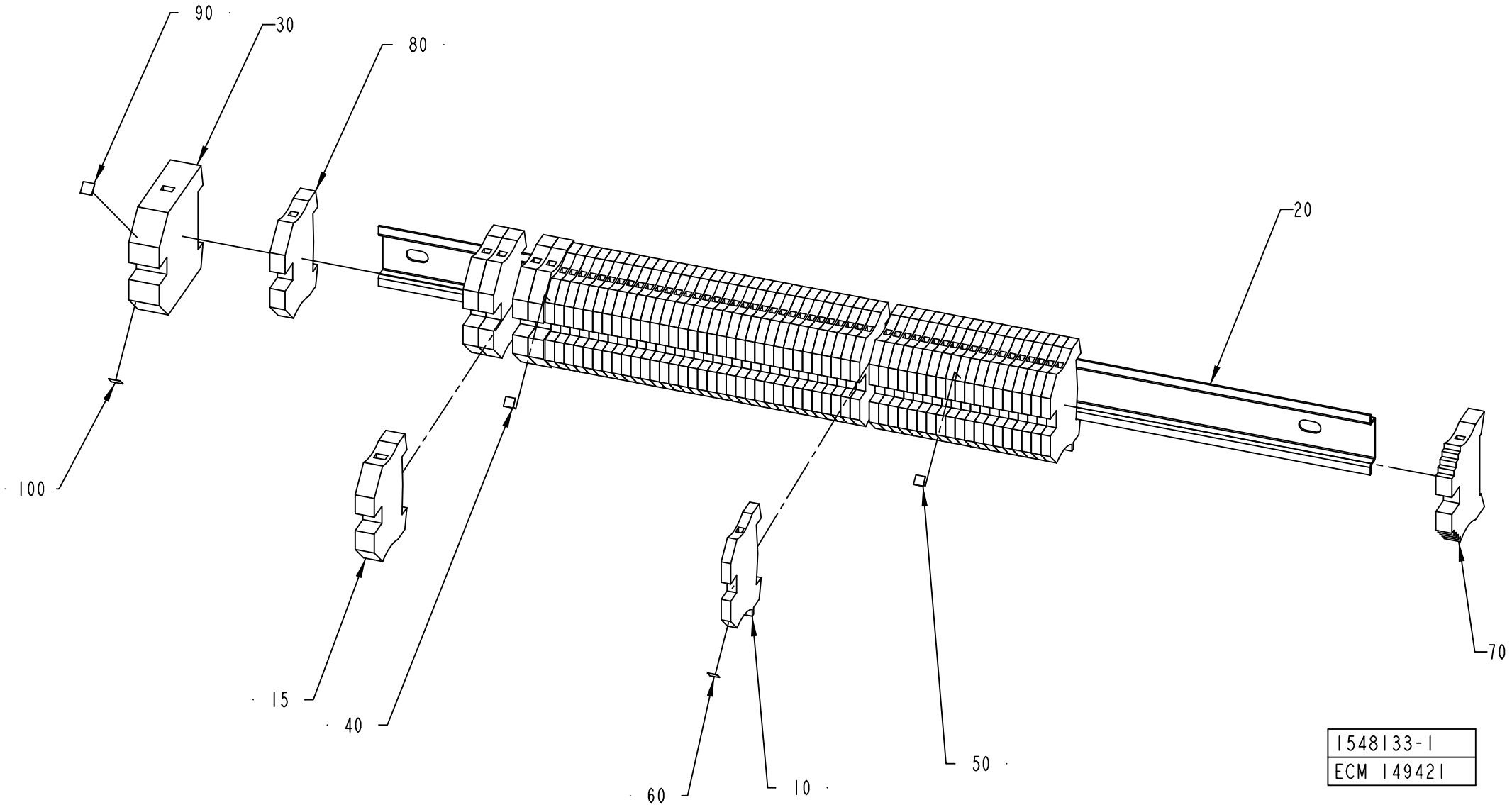
90
30
80
20
100
15
40
60
10
50
70
1548133-1
ECM 149421

ECM: 260068 - 20060412
Group number: 1548133-0100
Assembly Drawing: 1548133-1_1_AB

Pos	Part No	UN	Qty	Description	Page No
A3/FLEX					
040	359011-0807		1	MARKING PLATES 5-FW 1-50	
070	353031-0203		1	END SUPPORT, WEW 35/2	
090	359011-0821		1	SET OF SIGNS 6-FW 1-50	
Common Parts					
010	353024-0204		53	EARTH TERMINAL WPE 2,5	
015	353024-0207		1	EARTH TERMINAL, 1010.3	
020	2558934-0000		1	RAIL	
030	353024-0209		1	EARTH TERMINAL, 1010.5	
050	359011-0808		1	MARKING PLATES 5-FW 51-100	
060	359011-0809		1	MARKING PLATES 5-FW 101-150	
080	353024-0206		5	EARTH TERMINAL, 1010.2	
100	359011-0822		1	SET OF SIGNS 6-FW 51-100	

Pos	Part No	UN	Qty	Description	Page No

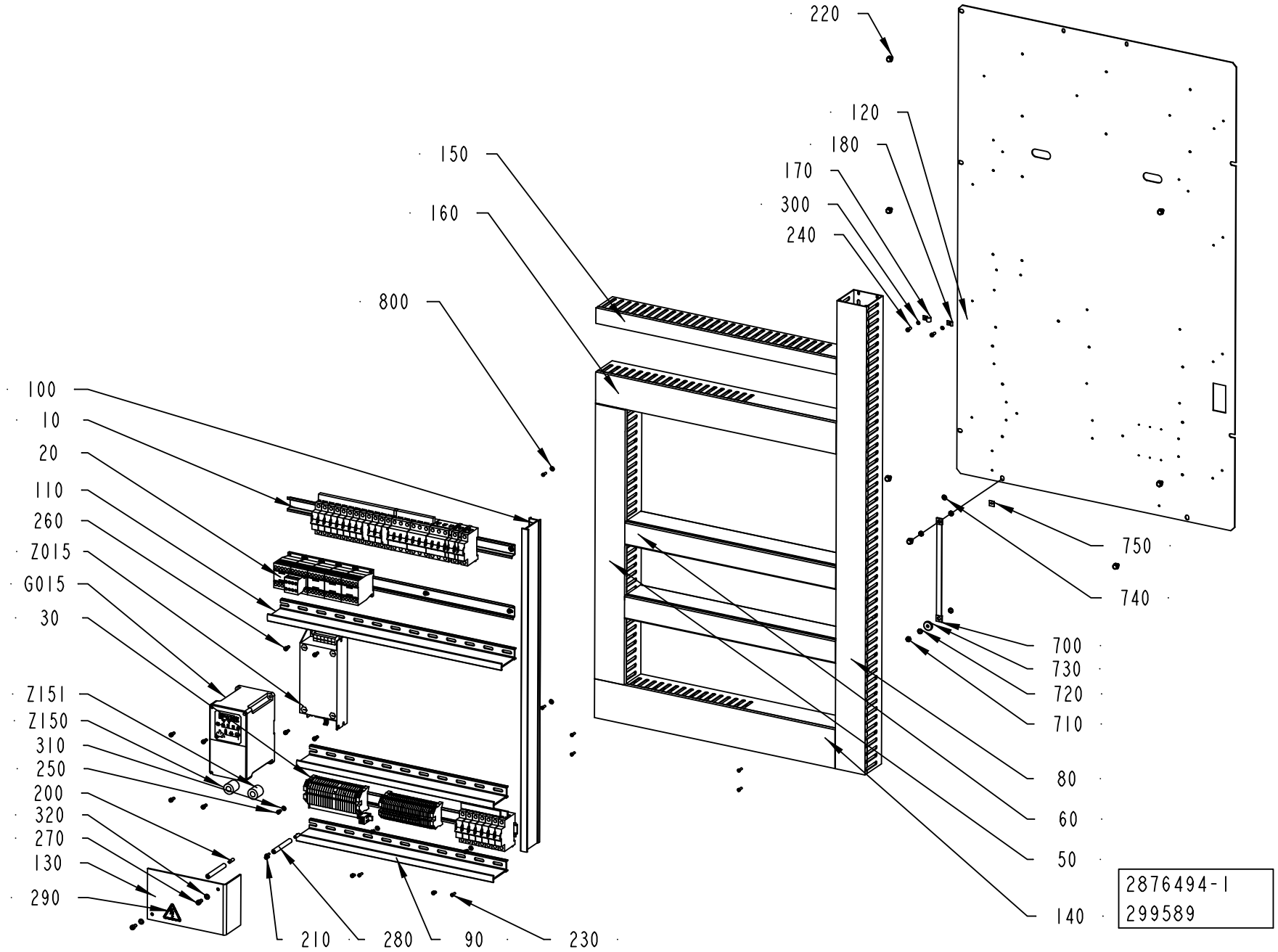
220
120
180
170
300
240
150
160
800
100
10
20
110
260
Z015
G015
30
Z151
Z150
310
250
200
320
270
130
290
210
280
90
230
750
740
700
730
720
710
80
60
50
140
2876494-1
299589

ECM: 340648 - 20080215
Group number: 2876494-0100
Assembly Drawing: 2876494-1_1_AA

This list covers pages from 9-134 to 9-137

Pos	Part No	UN	Qty	Description	Page No
A3/FLEX TBA, A3/FLEX TPA (See drawing on page: 9-134)					
10	2876486-0100		1	FUSE BOARD 2	**9-139**
130	1532930-0000		1	PROTECTION	
170	90165-0007		1	PIPE CLIP FOR TUBE D=8 MM	
180	90165-0022		1	PIPE CLIP, FOR TUBE D=2,5 MM, B-3570	
20	2876489-0100		1	FUSE BOARD 3	**9-141, 9-143**
240	312121-0327		2	SCREW ISO 1207 M5X12 4.8-5.8 Z.PL.	
260	312115-0327		8	SCREW ISO4762 M5X12 A4 80	
270	312111-0366		2	SCREW HEX.SOCK.HD.MC6S-TT 6X12 88 FZB	
280	1038275-0012		2	SPACER	
30	1548134-0250		1	PLINTH	**9-145, 9-147**
300	315101-0136		2	WASHER BRB, 4,3/8 H=0,8	
310	315101-0146		3	WASHER PLAIN, BRB, 5,3/10 H=1	
320	315101-0153		2	WASHER PLAIN, BRB, 6,4/12 H=1,5	
G015	90600-1842		1	VARIABLE FREQUENCY DRIVE 22A-D6P0N104	
Z015	90459-3458		1	FOOTPRINT FILTER 22-RF012-BL	
Z150	90458-1140		1	FERRITE, RI-26-28-13	
Z151	90458-1140		1	FERRITE, RI-26-28-13	
A3/FLEX TGA (See drawing on page: 9-136)					
10	2876486-0100		1	FUSE BOARD 2	**9-139**
130	1532930-0000		1	PROTECTION	
170	90165-0007		1	PIPE CLIP FOR TUBE D=8 MM	
180	90165-0022		1	PIPE CLIP, FOR TUBE D=2,5 MM, B-3570	
20	2876489-0100		1	FUSE BOARD 3	**9-141, 9-143**
240	312121-0327		2	SCREW ISO 1207 M5X12 4.8-5.8 Z.PL.	
260	312115-0327		8	SCREW ISO4762 M5X12 A4 80	
270	312111-0366		2	SCREW HEX.SOCK.HD.MC6S-TT 6X12 88 FZB	
280	1038275-0012		2	SPACER	
30	1548134-0250		1	PLINTH	**9-145, 9-147**
300	315101-0136		2	WASHER BRB, 4,3/8 H=0,8	
310	315101-0146		3	WASHER PLAIN, BRB, 5,3/10 H=1	
320	315101-0153		2	WASHER PLAIN, BRB, 6,4/12 H=1,5	
G015	90600-1842		1	VARIABLE FREQUENCY DRIVE 22A-D6P0N104	
Z015	90459-3458		1	FOOTPRINT FILTER 22-RF012-BL	
Z150	90458-1140		1	FERRITE, RI-26-28-13	
Z151	90458-1140		1	FERRITE, RI-26-28-13	
Common Parts					
100	2889877-0000		1	DIVIDER	
110	2889878-0000		1	DIVIDER	
120	2876481-0000		1	MOUNTING PLATE	
140	2889876-0000		1	CABLE DUCT 100X80MM	
150	2889874-0000		1	CABLE DUCT 40X80MM	
160	2889875-0000		1	CABLE DUCT 80X80MM	
200	312318-0370		2	SCREW ISO4029 M6X20 A4	
210	90181-0064		12	LOCK ZP1 FOR CHANNEL T1	
220	90287-0157		7	SCREW M6SF FLAT HEAD M6X10 88	
230	90287-0124		28	SCREW PAN HEAD MSCS M4X12 NYLON	
250	312121-0323		3	SCREW ISO 1207 M5X8 4.8-5.8 Z.PL.	
290	359705-0015		1	WARNING SIGN ISO, RISK OF ELECTRIC SHOCK	
50	2892590-0000		1	CABLE DUCT	
60	2892591-0000		2	CABLE DUCT	
700	90135-0035		1	EARTH WIRE, L=250 MM 16 MM2	
710	312601-0316		1	HEXAGON NUT, DIN 934 M6 8 FZB	
720	90062-0015		4	LOCK WASHER SERRAT.EXT.GEAR,6,4/11 H=0,7	
730	315125-0153		1	WASHER TBRSB 6,4X22X4 A4	
740	2608177-0000		1	SIGN	
750	90194-0152		1	SIGN, EARTH	
80	2876496-0000		1	CABLE DUCT	
800	90459-3256		3	NYLON RETAINER, 82-32-301-12	
90	2892578-0000		2	DIVIDER	

Machine Type | Group Description | Used-In | Group Number | Page No

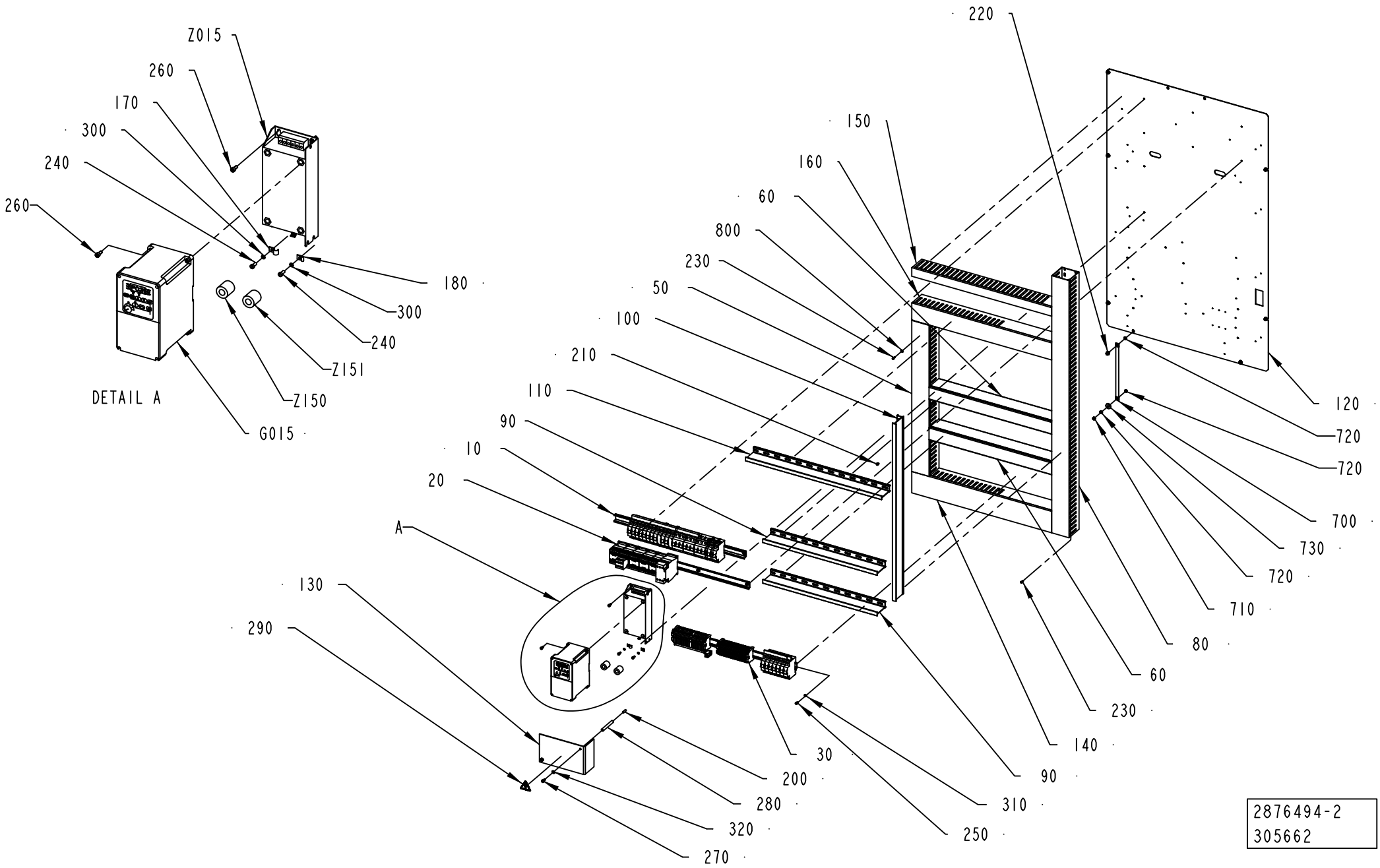
Z015
260
170
300
240
260
180
300
240
Z151
Z150
G015
DETAIL A
220
150
160
60
800
230
50
100
210
110
90
10
20
A
130
290
120
720
720
700
730
720
710
80
60
230
140
90
310
250
30
200
280
320
270
2876494-2
305662

ECM: 340648 - 20080215
Group number: 2876494-0100
Assembly Drawing: 2876494-2_1_AA

This list covers pages from 9-134 to 9-137

Pos	Part No	UN	Qty	Description	Page No
A3/FLEX TBA, A3/FLEX TPA (See drawing on page: 9-134)					
10	2876486-0100		1	FUSE BOARD 2	**9-139**
130	1532930-0000		1	PROTECTION	
170	90165-0007		1	PIPE CLIP FOR TUBE D=8 MM	
180	90165-0022		1	PIPE CLIP, FOR TUBE D=2,5 MM, B-3570	
20	2876489-0100		1	FUSE BOARD 3	**9-141, 9-143**
240	312121-0327		2	SCREW ISO 1207 M5X12 4.8-5.8 Z.PL.	
260	312115-0327		8	SCREW ISO4762 M5X12 A4 80	
270	312111-0366		2	SCREW HEX.SOCK.HD.MC6S-TT 6X12 88 FZB	
280	1038275-0012		2	SPACER	
30	1548134-0250		1	PLINTH	**9-145, 9-147**
300	315101-0136		2	WASHER BRB, 4,3/8 H=0,8	
310	315101-0146		3	WASHER PLAIN, BRB, 5,3/10 H=1	
320	315101-0153		2	WASHER PLAIN, BRB, 6,4/12 H=1,5	
G015	90600-1842		1	VARIABLE FREQUENCY DRIVE 22A-D6P0N104	
Z015	90459-3458		1	FOOTPRINT FILTER 22-RF012-BL	
Z150	90458-1140		1	FERRITE, RI-26-28-13	
Z151	90458-1140		1	FERRITE, RI-26-28-13	
A3/FLEX TGA (See drawing on page: 9-136)					
10	2876486-0100		1	FUSE BOARD 2	**9-139**
130	1532930-0000		1	PROTECTION	
170	90165-0007		1	PIPE CLIP FOR TUBE D=8 MM	
180	90165-0022		1	PIPE CLIP, FOR TUBE D=2,5 MM, B-3570	
20	2876489-0100		1	FUSE BOARD 3	**9-141, 9-143**
240	312121-0327		2	SCREW ISO 1207 M5X12 4.8-5.8 Z.PL.	
260	312115-0327		8	SCREW ISO4762 M5X12 A4 80	
270	312111-0366		2	SCREW HEX.SOCK.HD.MC6S-TT 6X12 88 FZB	
280	1038275-0012		2	SPACER	
30	1548134-0250		1	PLINTH	**9-145, 9-147**
300	315101-0136		2	WASHER BRB, 4,3/8 H=0,8	
310	315101-0146		3	WASHER PLAIN, BRB, 5,3/10 H=1	
320	315101-0153		2	WASHER PLAIN, BRB, 6,4/12 H=1,5	
G015	90600-1842		1	VARIABLE FREQUENCY DRIVE 22A-D6P0N104	
Z015	90459-3458		1	FOOTPRINT FILTER 22-RF012-BL	
Z150	90458-1140		1	FERRITE, RI-26-28-13	
Z151	90458-1140		1	FERRITE, RI-26-28-13	
Common Parts					
100	2889877-0000		1	DIVIDER	
110	2889878-0000		1	DIVIDER	
120	2876481-0000		1	MOUNTING PLATE	
140	2889876-0000		1	CABLE DUCT 100X80MM	
150	2889874-0000		1	CABLE DUCT 40X80MM	
160	2889875-0000		1	CABLE DUCT 80X80MM	
200	312318-0370		2	SCREW ISO4029 M6X20 A4	
210	90181-0064		12	LOCK ZP1 FOR CHANNEL T1	
220	90287-0157		7	SCREW M6SF FLAT HEAD M6X10 88	
230	90287-0124		28	SCREW PAN HEAD MSCS M4X12 NYLON	
250	312121-0323		3	SCREW ISO 1207 M5X8 4.8-5.8 Z.PL.	
290	359705-0015		1	WARNING SIGN ISO, RISK OF ELECTRIC SHOCK	
50	2892590-0000		1	CABLE DUCT	
60	2892591-0000		2	CABLE DUCT	
700	90135-0035		1	EARTH WIRE, L=250 MM 16 MM2	
710	312601-0316		1	HEXAGON NUT, DIN 934 M6 8 FZB	
720	90062-0015		4	LOCK WASHER SERRAT.EXT.GEAR,6,4/11 H=0,7	
730	315125-0153		1	WASHER TBRSB 6,4X22X4 A4	
740	2608177-0000		1	SIGN	
750	90194-0152		1	SIGN, EARTH	
80	2876496-0000		1	CABLE DUCT	
800	90459-3256		3	NYLON RETAINER, 82-32-301-12	
90	2892578-0000		2	DIVIDER	

Machine Type | Group Description | Used-In | Group Number | Page No

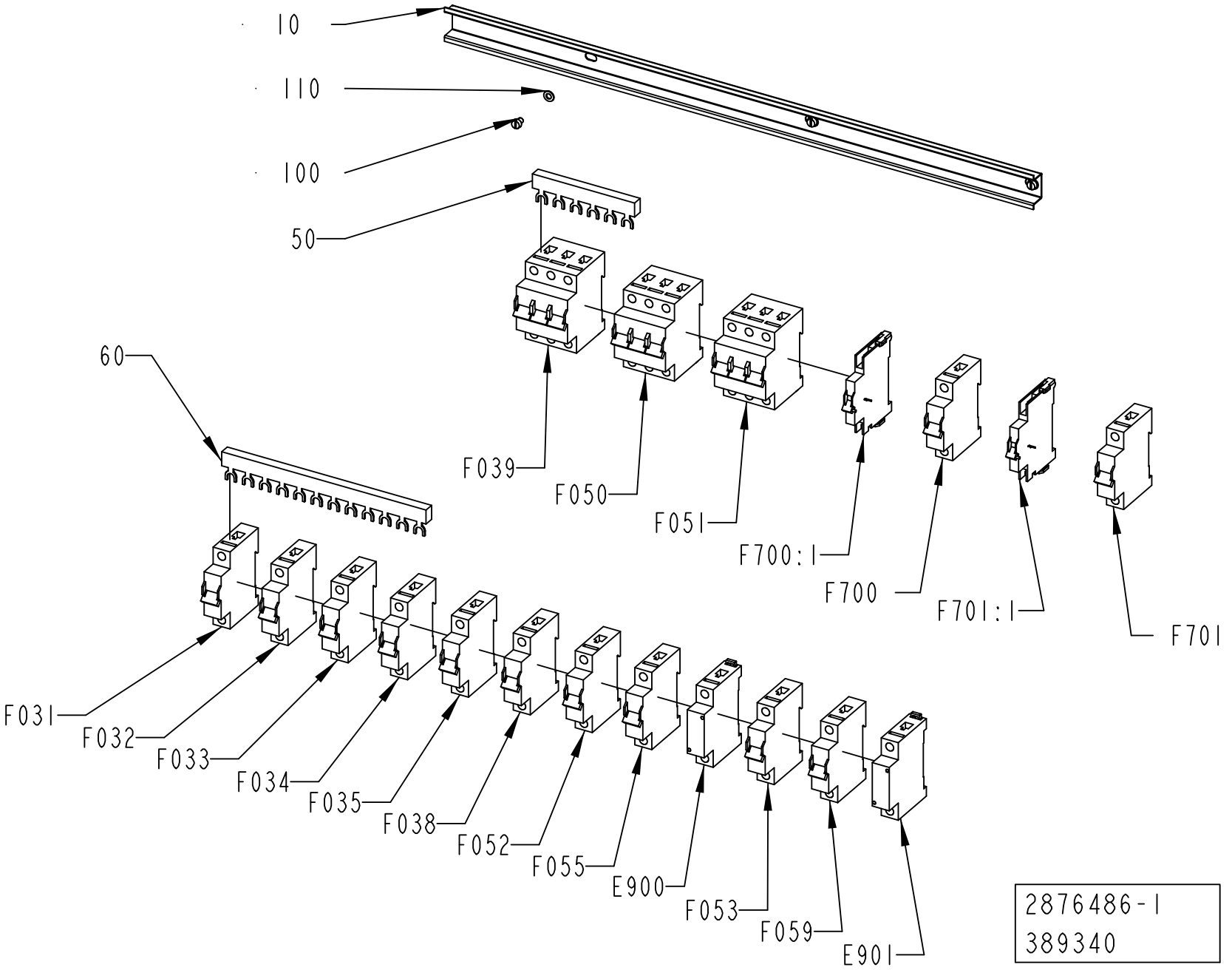
10
110
100
50
60
F039
F050
F051
F700:1
F700
F701:1
F701
F031
F032
F033
F034
F035
F038
F052
F055
E900
F053
F059
E901
2876486-1
389340

ECM: 393193 - 20090701
Group number: 2876486-0100
Assembly Drawing: 2876486-1_1_AB

Pos	Part No	UN	Qty	Description	Page No
-					
10	2892597-0000		1	RAIL	
100	312121-0321		3	SCREW ISO 1207 M5X6 4.8-5.8 Z.PL.	
110	315101-0146		3	WASHER PLAIN, BRB, 5,3/10 H=1	
50	90459-6854		1	COMMONING BUSBAR, 3-P 3-PH 6 100A	
60	90459-6855		1	COMMONING BUSBAR, 3-P 3-PH 12 100A	
E900	90459-6856		1	FEEDER BLOCK, FAZ/FIP-XVS-KL	
E901	90459-6856		1	FEEDER BLOCK, FAZ/FIP-XVS-KL	
F031	351416-0100		1	MINIATURE CIRC. BREAK., FAZ -D10 1-POLE	
F032	351416-0100		1	MINIATURE CIRC. BREAK., FAZ -D10 1-POLE	
F033	351416-0100		1	MINIATURE CIRC. BREAK., FAZ -D10 1-POLE	
F034	351416-0160		1	MINIATURE CIRC. BREAK., FAZ -D16 1-POLE	
F035	351416-0160		1	MINIATURE CIRC. BREAK., FAZ -D16 1-POLE	
F038	351416-0010		1	MINIATURE CIRC. BREAK., FAZ -D1 1-POLE	
F039	351418-0100		1	MINIATURE CIRC. BREAK., FAZ-D10/3 3-POLE	
F050	351418-0060		1	MINIATURE CIRC. BREAK., FAZ-D6/3 3-POLE	
F051	351418-0400		1	MINIATURE CIRC. BREAK.,FAZ-D40/3 3-POLE	
F052	351416-0060		1	MINIATURE CIRC. BREAK., FAZ -D6 1-POLE	
F053	354000-0100		1	MINIATURE CIRCUIT BREAKER, FAZ-C10/1	
F055	351416-0020		1	MINIATURE CIRC. BREAK., FAZ -D2 1-POLE	
F059	351416-0060		1	MINIATURE CIRC. BREAK., FAZ -D6 1-POLE	
F700	351416-0160		1	MINIATURE CIRC. BREAK., FAZ -D16 1-POLE	
F700:1	90459-5813		1	AUXILARY CONTACT, FAZ-XHI11	
F701	351416-0160		1	MINIATURE CIRC. BREAK., FAZ -D16 1-POLE	
F701:1	90459-5813		1	AUXILARY CONTACT, FAZ-XHI11	

Pos	Part No	UN	Qty	Description	Page No

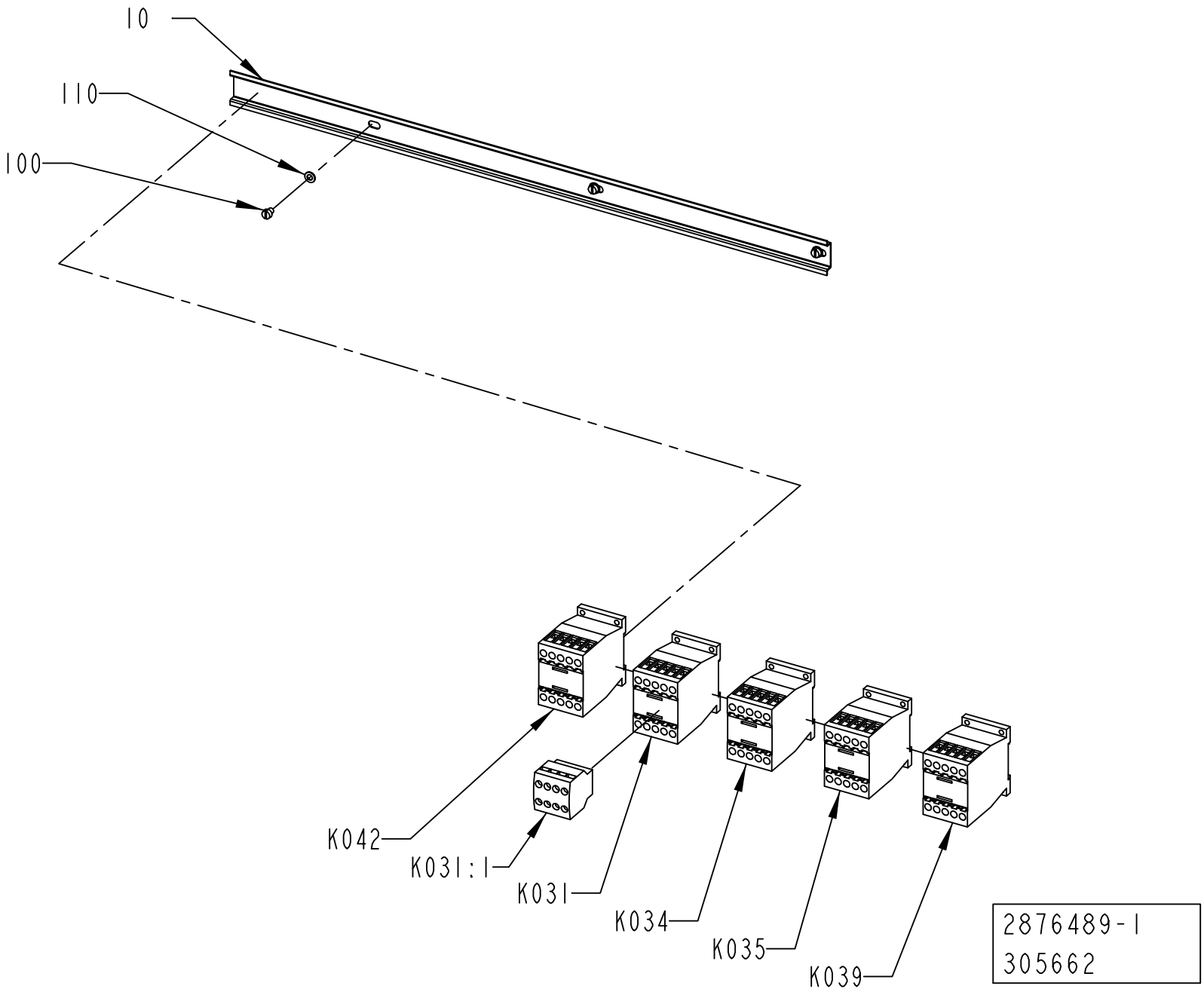
10
110
100
K042
K031:1
K031
K034
K035
K039
2876489-1
305662

ECM: 305662 - 20070701
Group number: 2876489-0100
Assembly Drawing: 2876489-1_1_AA

This list covers pages from 9-140 to 9-143

Pos	Part No	UN	Qty	Description	Page No
A3/FLEX TGA (See drawing on pages: 9-140, 9-142)					
K046	90459-5441		1	CONTACTOR 7,5KW 24VDC, DILM17-01	
Common Parts					
10	2892598-0000		1	RAIL	
100	312121-0321		3	SCREW ISO 1207 M5X6 4.8-5.8 Z.PL.	
110	315101-0146		3	WASHER PLAIN, BRB, 5,3/10 H=1	
K031	90459-5440		1	CONTACTOR 4KW 24VDC, DILM9-01	
K031:1	90459-6852		1	AUXILIARY CONTACT, DILA-XHI22	
K034	90459-5440		1	CONTACTOR 4KW 24VDC, DILM9-01	
K035	90459-5440		1	CONTACTOR 4KW 24VDC, DILM9-01	
K039	90459-5440		1	CONTACTOR 4KW 24VDC, DILM9-01	
K042	90459-5440		1	CONTACTOR 4KW 24VDC, DILM9-01	

Pos	Part No	UN	Qty	Description	Page No

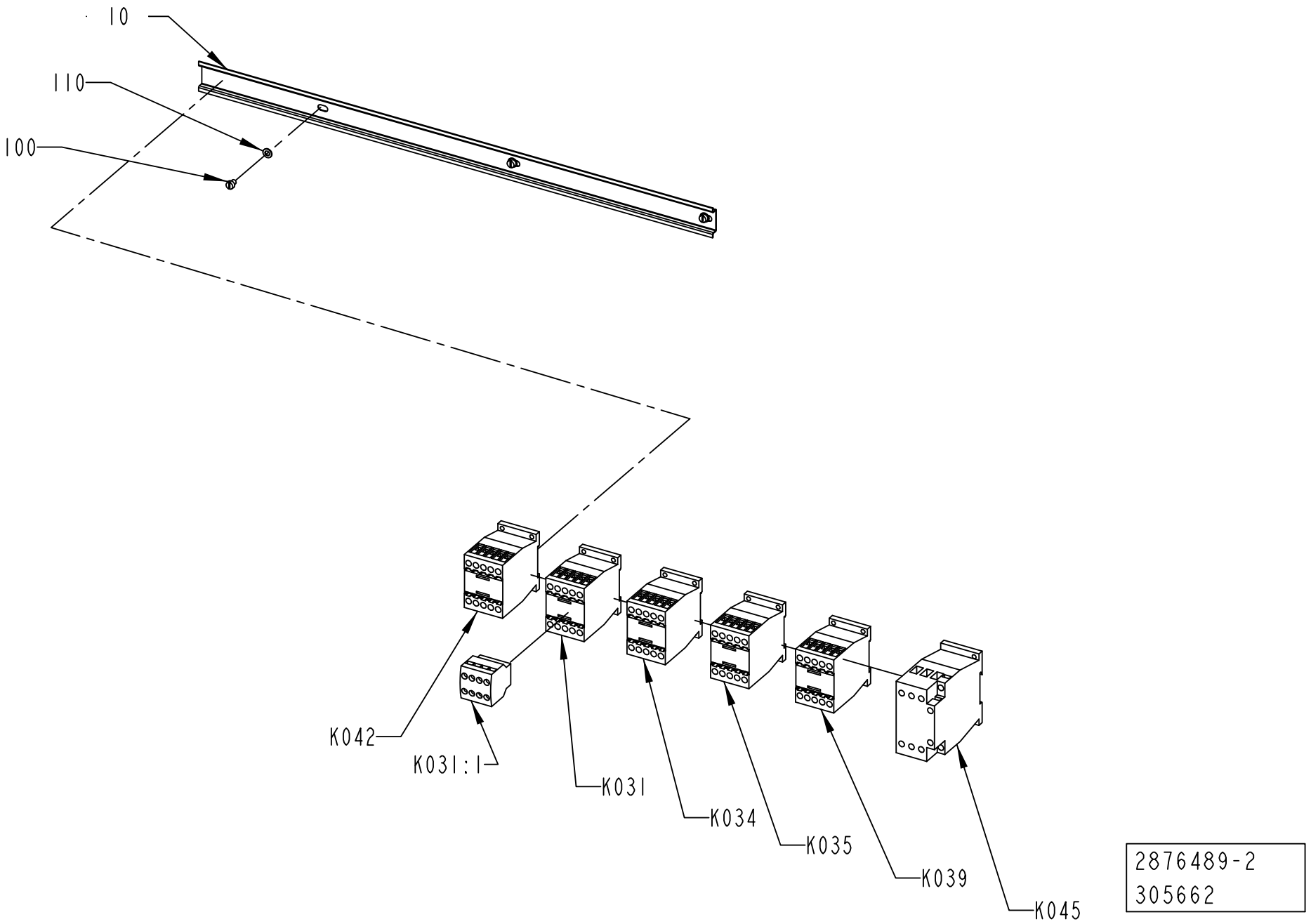
10
110
100
K042
K031:1
K031
K034
K035
K039
K045
2876489-2
305662

ECM: 305662 - 20070701
Group number: 2876489-0100
Assembly Drawing: 2876489-2_1_AA

This list covers pages from 9-140 to 9-143

Pos	Part No	UN	Qty	Description	Page No
A3/FLEX TGA (See drawing on pages: 9-140, 9-142)					
K046	90459-5441		1	CONTACTOR 7,5KW 24VDC, DILM17-01	
Common Parts					
10	2892598-0000		1	RAIL	
100	312121-0321		3	SCREW ISO 1207 M5X6 4.8-5.8 Z.PL.	
110	315101-0146		3	WASHER PLAIN, BRB, 5,3/10 H=1	
K031	90459-5440		1	CONTACTOR 4KW 24VDC, DILM9-01	
K031:1	90459-6852		1	AUXILIARY CONTACT, DILA-XHI22	
K034	90459-5440		1	CONTACTOR 4KW 24VDC, DILM9-01	
K035	90459-5440		1	CONTACTOR 4KW 24VDC, DILM9-01	
K039	90459-5440		1	CONTACTOR 4KW 24VDC, DILM9-01	
K042	90459-5440		1	CONTACTOR 4KW 24VDC, DILM9-01	

Pos	Part No	UN	Qty	Description	Page No

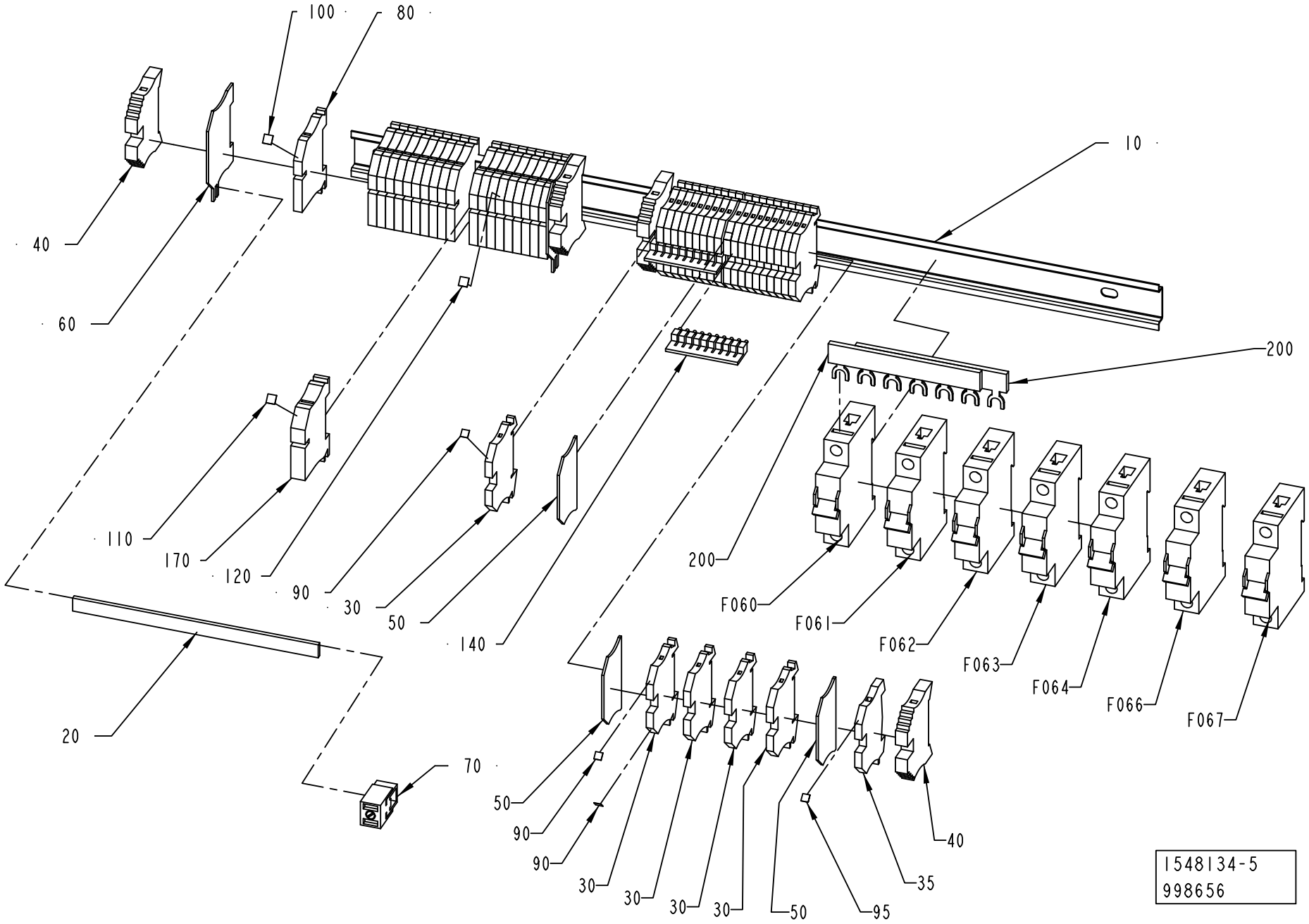
100
80
10
40
60
200
110
170
120
90
30
50
140
200
F060
F061
F062
F063
F064
F066
F067
20
70
50
90
90
30
30
30
30
50
95
35
40
1548134-5
998656

ECM: 998656 - 20090403
Group number: 1548134-0250
Assembly Drawing: 1548134-5_1_AB

This list covers pages from 9-144 to 9-147

Pos	Part No	UN	Qty	Description	Page No
A3/FLEX TBA, A3/FLEX TPA (See drawing on page: 9-144)					
020	353041-0001	MM	170	BUS BAR RAIL 10X3MM SSCH	
080	353022-0002		20	NEUTRAL TERMINAL, 10107.8	
120	359011-0823		1	SET OF SIGNS 6-FW 101-150	
F063	354000-0100		1	MINIATURE CIRCUIT BREAKER, FAZ-C10/1	
F064	351416-0160		1	MINIATURE CIRC. BREAK., FAZ -D16 1-POLE	
F066	351416-0060		1	MINIATURE CIRC. BREAK., FAZ -D6 1-POLE	
A3/FLEX TGA (See drawing on page: 9-146)					
020	353041-0001	MM	170	BUS BAR RAIL 10X3MM SSCH	
080	353022-0002		21	NEUTRAL TERMINAL, 10107.8	
120	359011-0823		1	SET OF SIGNS 6-FW 101-150	
F063	354000-0100		1	MINIATURE CIRCUIT BREAKER, FAZ-C10/1	
F064	351416-0160		1	MINIATURE CIRC. BREAK., FAZ -D16 1-POLE	
F066	351416-0060		1	MINIATURE CIRC. BREAK., FAZ -D6 1-POLE	
Common Parts					
010	2558933-0000		1	RAIL	
030	353021-0212		24	FEED THROUGH TERMINAL, 10200.0	
035	353024-0204		1	EARTH TERMINAL WPE 2,5	
040	353031-0203		4	END SUPPORT, WEW 35/2	
050	353032-0004		3	END PLATE WAP 2,5-10 BEIGE	
060	353033-0104		2	END PLATE, 10502.8	
070	353041-0106		1	HOLDER ZB35 K 5026.8	
090	359011-0807		4	MARKING PLATES 5-FW 1-50	
095	359011-0819		1	MARKING PLATES 5-GW (EARTH)	
100	359011-0821		1	SET OF SIGNS 6-FW 1-50	
110	359011-0822		1	SET OF SIGNS 6-FW 51-100	
140	353034-0030		2	BRIDGE CONNECTOR WQV 2,5/10, 10544.6	
170	353022-0004		1	NEUTRAL TERMINAL, 10109.8	
200	90600-0203		2	COMMONING BUSBAR, 1-PH 85A	
F060	354000-0100		1	MINIATURE CIRCUIT BREAKER, FAZ-C10/1	
F061	354000-0100		1	MINIATURE CIRCUIT BREAKER, FAZ-C10/1	
F062	354000-0100		1	MINIATURE CIRCUIT BREAKER, FAZ-C10/1	
F067	354000-0040		1	MINIATURE CIRCUIT BREAKER, FAZ-C4/1	

Pos	Part No	UN	Qty	Description	Page No

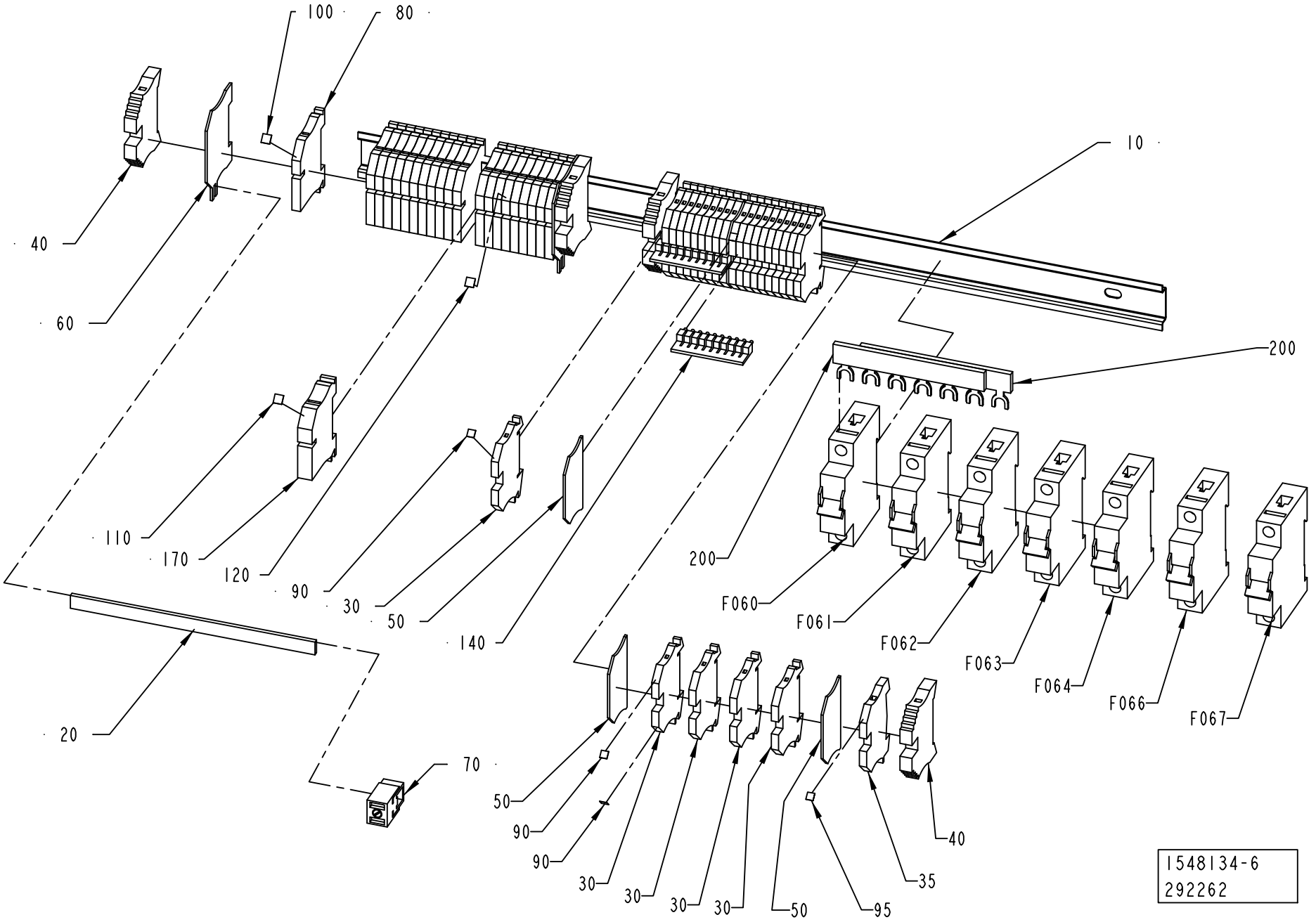
100
80
10
40
60
200
110
170
120
90
30
50
140
200
F060
F061
F062
F063
F064
F066
F067
20
70
50
90
90
30
30
30
30
50
95
35
40
1548134-6
292262

ECM: 998656 - 20090403
Group number: 1548134-0250
Assembly Drawing: 1548134-6_1_AA

This list covers pages from 9-144 to 9-147

Pos	Part No	UN	Qty	Description	Page No
A3/FLEX TBA, A3/FLEX TPA (See drawing on page: 9-144)					
020	353041-0001	MM	170	BUS BAR RAIL 10X3MM SSCH	
080	353022-0002		20	NEUTRAL TERMINAL, 10107.8	
120	359011-0823		1	SET OF SIGNS 6-FW 101-150	
F063	354000-0100		1	MINIATURE CIRCUIT BREAKER, FAZ-C10/1	
F064	351416-0160		1	MINIATURE CIRC. BREAK., FAZ -D16 1-POLE	
F066	351416-0060		1	MINIATURE CIRC. BREAK., FAZ -D6 1-POLE	
A3/FLEX TGA (See drawing on page: 9-146)					
020	353041-0001	MM	170	BUS BAR RAIL 10X3MM SSCH	
080	353022-0002		21	NEUTRAL TERMINAL, 10107.8	
120	359011-0823		1	SET OF SIGNS 6-FW 101-150	
F063	354000-0100		1	MINIATURE CIRCUIT BREAKER, FAZ-C10/1	
F064	351416-0160		1	MINIATURE CIRC. BREAK., FAZ -D16 1-POLE	
F066	351416-0060		1	MINIATURE CIRC. BREAK., FAZ -D6 1-POLE	
Common Parts					
010	2558933-0000		1	RAIL	
030	353021-0212		24	FEED THROUGH TERMINAL, 10200.0	
035	353024-0204		1	EARTH TERMINAL WPE 2,5	
040	353031-0203		4	END SUPPORT, WEW 35/2	
050	353032-0004		3	END PLATE WAP 2,5-10 BEIGE	
060	353033-0104		2	END PLATE, 10502.8	
070	353041-0106		1	HOLDER ZB35 K 5026.8	
090	359011-0807		4	MARKING PLATES 5-FW 1-50	
095	359011-0819		1	MARKING PLATES 5-GW (EARTH)	
100	359011-0821		1	SET OF SIGNS 6-FW 1-50	
110	359011-0822		1	SET OF SIGNS 6-FW 51-100	
140	353034-0030		2	BRIDGE CONNECTOR WQV 2,5/10, 10544.6	
170	353022-0004		1	NEUTRAL TERMINAL, 10109.8	
200	90600-0203		2	COMMONING BUSBAR, 1-PH 85A	
F060	354000-0100		1	MINIATURE CIRCUIT BREAKER, FAZ-C10/1	
F061	354000-0100		1	MINIATURE CIRCUIT BREAKER, FAZ-C10/1	
F062	354000-0100		1	MINIATURE CIRCUIT BREAKER, FAZ-C10/1	
F067	354000-0040		1	MINIATURE CIRCUIT BREAKER, FAZ-C4/1	

Pos	Part No	UN	Qty	Description	Page No

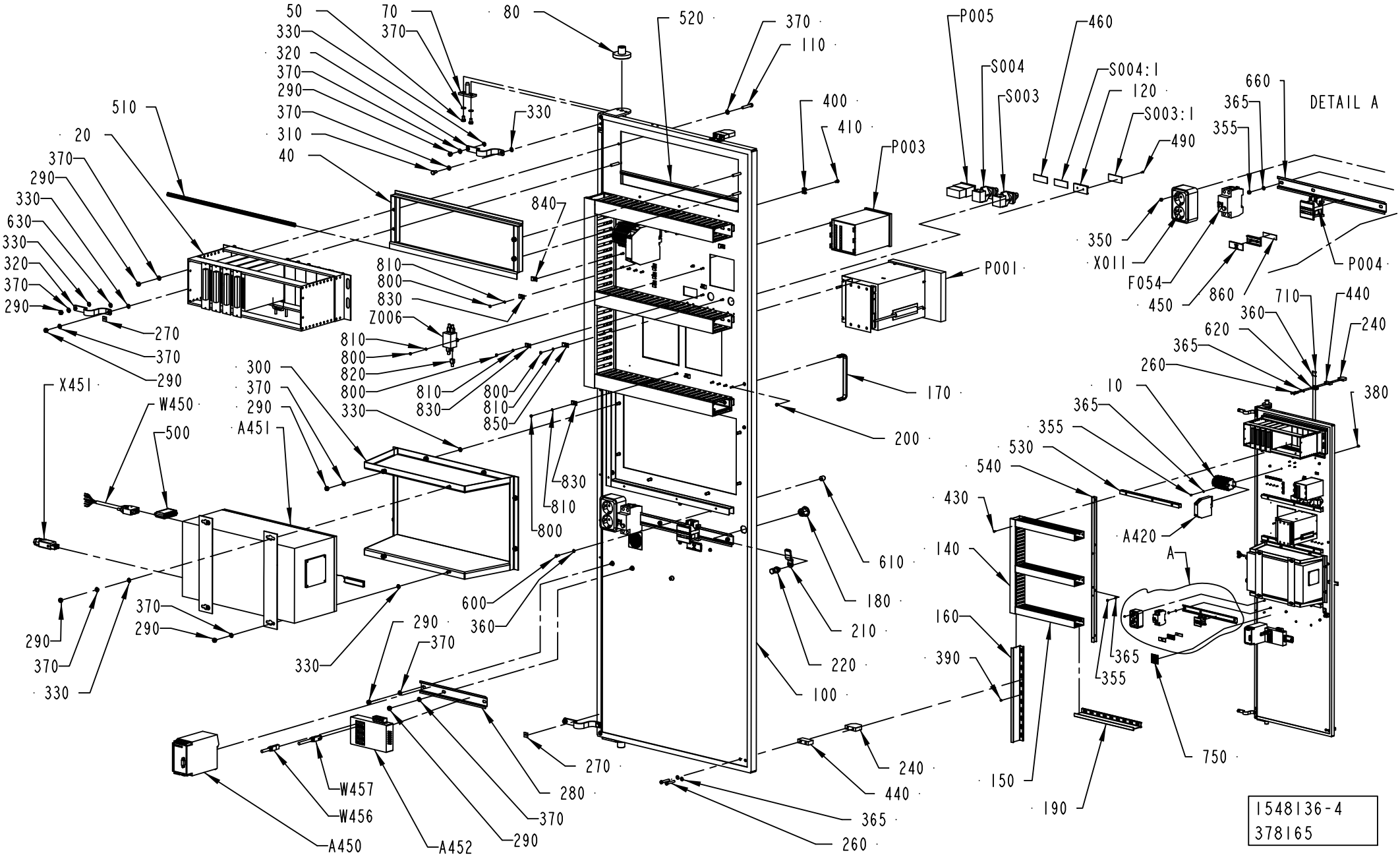
50
70
370
330
320
370
290
370
310
40
80
520
370
110
330
400
410
P003
P005
S004
S003
460
S004:1
120
S003:1
490
660
365
355
DETAIL A
510
20
370
290
330
630
330
320
370
290
270
370
290
840
810
800
830
Z006
810
800
820
800
810
830
800
810
850
300
370
290
A451
330
X451
W450
500
290
370
330
370
290
330
290
370
280
370
290
A450
W457
W456
A452
270
600
360
830
810
800
610
180
210
220
100
170
200
P001
350
X011
F054
450
860
P004
710
440
360
620
240
365
260
380
10
365
355
530
540
430
A420
A
140
160
390
150
190
365
355
750
240
440
365
260
1548136-4
378165

ECM: 387942 - 20090403
Group number: 1548136-0150
Assembly Drawing: 1548136-4_1_AE

This list covers pages from 9-148 to 9-153

Pos	Part No	UN	Qty	Description	Page No
A3/FLEX (See drawing on page: 9-148)					
010	1532901-0100		1	PLINTH	**9-155**
020	1532906-0100		1	RACK	**9-157**
040	1038355-0000		1	FRAME	
355	312605-0314		21	HEXAGON NUT, M6M M5 A280	
360	315105-0136		10	WASHER BRB 4,3X8 RFR	
365	315105-0146		25	WASHER BRB 5,3X10 RFR	
370	315105-0153		35	WASHER BRB 6,4X12 RFR	
440	1548116-0000		2	SPACER	
460	359241-0482		1	SIGN "PACKAGE COUNTER"	
500	90459-0708		1	INTOUCH OEM 5000 V.7.0/7.1 HW KEY	
800	312605-0310		16	HEXAGON NUT, M6M M3 A280	
810	315105-0124		16	WASHER BRB 3,2X6 RFR	
830	90165-0003		11	PIPE CLIP FOR TUBE D=4 MM	
840	90165-0024		1	PIPE CLIP FOR TUBE D=5 MM	
850	90165-0057		2	PIPE CLIP FOR TUBE D=6 MM	
A420	90459-0183		1	TRANSMITTER , TRANS T02 PCP	
A452	90459-6858		1	ETHERNET SW, FL SWITCH SF 8TX FROM V 14	
P001	90459-4033		1	RECORDER 12-CHANNEL PAPERLESS FDA-APPR	
P003	90459-5187		1	CONDUCTIVITY TRANSMITTER CLM223-ID7105	
P004	90070-0017		1	WORKING HOURS COUNTER, 7991 DR H?NLE	
P005	90053-0029		1	COUNTER, F524.800FA3C 24VDC	
W151	90220-0183	MM	4500	SCR. CABLE 2X0,34MM2	
W152	90220-0183	MM	4800	SCR. CABLE 2X0,34MM2	
W153	90220-0183	MM	4500	SCR. CABLE 2X0,34MM2	
W456	90459-1621		1	CABLE, ETHERNET RJ 45 CONNECT. 1 M	
W457	90220-0180		1	CABLE, ETHERNET RJ 45 CONNECT. 3 M	
TBA/22 NO PACKTRACE PRINT (See drawing on page: 9-150)					
010	2885027-0100		1	PLINTH	**9-159**
020	2885025-0100		1	RACK	**9-161**
355	312605-0314		21	HEXAGON NUT, M6M M5 A280	
360	315105-0136		8	WASHER BRB 4,3X8 RFR	
365	315105-0146		25	WASHER BRB 5,3X10 RFR	
370	315105-0153		35	WASHER BRB 6,4X12 RFR	
500	90458-1102		1	INTOUCH OEM 2000 V.7.0/7.1 HW KEY	
800	312605-0310		28	HEXAGON NUT, M6M M3 A280	
810	315105-0124		28	WASHER BRB 3,2X6 RFR	
830	90165-0022		20	PIPE CLIP, FOR TUBE D=2,5 MM, B-3570	
840	90165-0007		6	PIPE CLIP FOR TUBE D=8 MM	
A414	90459-5187		1	CONDUCTIVITY TRANSMITTER CLM223-ID7105	
P002	90459-0080		1	RECORDER 6-CHANNEL, LOGOPRINT 500	
	90459-0084		*5*	*FOLDED PAPER, 0-100*	
	90459-0085		*5*	*ROLL CHART PAPER, 00331497*	
	90459-0087		*2*	*PRINT WHEEL, 6-COLOURS*	
	90459-3881		*1*	*FOLDED PAPER, 00420840*	
P100	90070-0017		1	WORKING HOURS COUNTER, 7991 DR H?NLE	
P100:1	359241-0201		1	SIGN: " HOUR METER"	
P101	90053-0029		1	COUNTER, F524.800FA3C 24VDC	
P101:1	359241-0482		1	SIGN "PACKAGE COUNTER"	
R807	90121-0120		1	RESISTANCE FIXED, 0,25 KOHM, 0,125 W	
R808	90121-0120		1	RESISTANCE FIXED, 0,25 KOHM, 0,125 W	
R809	90121-0120		1	RESISTANCE FIXED, 0,25 KOHM, 0,125 W	
W151	90220-0183	MM	3900	SCR. CABLE 2X0,34MM2	
W152	90220-0183	MM	5100	SCR. CABLE 2X0,34MM2	
TBA/22 PACKTRACE DOM (See drawing on page: 9-152)					
010	2885027-0100		1	PLINTH	**9-159**
020	2885025-0100		1	RACK	**9-161**
355	312605-0314		21	HEXAGON NUT, M6M M5 A280	
360	315105-0136		8	WASHER BRB 4,3X8 RFR	
365	315105-0146		25	WASHER BRB 5,3X10 RFR	
370	315105-0153		35	WASHER BRB 6,4X12 RFR	
500	90458-1102		1	INTOUCH OEM 2000 V.7.0/7.1 HW KEY	
800	312605-0310		28	HEXAGON NUT, M6M M3 A280	
810	315105-0124		28	WASHER BRB 3,2X6 RFR	
830	90165-0022		20	PIPE CLIP, FOR TUBE D=2,5 MM, B-3570	
840	90165-0007		6	PIPE CLIP FOR TUBE D=8 MM	
A414	90459-5187		1	CONDUCTIVITY TRANSMITTER CLM223-ID7105	
A452	90600-1847		1	ETHERNET SWITCH, FL SWITCH SFN 5TX	
P002	90459-0080		1	RECORDER 6-CHANNEL, LOGOPRINT 500	
	90459-0084		*5*	*FOLDED PAPER, 0-100*	
	90459-0085		*5*	*ROLL CHART PAPER, 00331497*	
	90459-0087		*2*	*PRINT WHEEL, 6-COLOURS*	
	90459-3881		*1*	*FOLDED PAPER, 00420840*	
P100	90070-0017		1	WORKING HOURS COUNTER, 7991 DR H?NLE	
P100:1	359241-0201		1	SIGN: " HOUR METER"	
P101	90053-0029		1	COUNTER, F524.800FA3C 24VDC	
P101:1	359241-0482		1	SIGN "PACKAGE COUNTER"	
R807	90121-0120		1	RESISTANCE FIXED, 0,25 KOHM, 0,125 W	
R808	90121-0120		1	RESISTANCE FIXED, 0,25 KOHM, 0,125 W	
R809	90121-0120		1	RESISTANCE FIXED, 0,25 KOHM, 0,125 W	
W151	90220-0183	MM	3900	SCR. CABLE 2X0,34MM2	
W152	90220-0183	MM	5100	SCR. CABLE 2X0,34MM2	
W451	90459-1621		1	CABLE, ETHERNET RJ 45 CONNECT. 1 M	
W452	351501-0030		1	ETHERNET PATCH CABLE, FL CAT5 PATCH 3,0	

Machine Type | Group Description | Used-In | Group Number | Page No

This page is intentionally left blank.

Pos	Part No	UN	Qty	Description	Page No
Common Parts (Cont'd)					
050	312105-0364		4	SCREW M6S ISO 4017 M6X10 A480	
070	971346-0000		2	GUIDE PIN	
080	495377-0000		2	BUSH	
100	2765461-0000		1	SWING FRAME	
110	312125-0376		4	SCREW ISO 1207 M6X35 A4	
120	359240-0100		4	SIGN HOLDER FOR 359240-0001	
140	2558939-0000		1	CABLE DUCT	
150	2558938-0000		3	CABLE DUCT	
160	2558941-0000		1	DIVIDER	
170	90600-5161		1	HANDLE, 116.11.644	
180	90237-0319		1	LOCK HOUSING, 1000-U134	
190	2558940-0000		1	DIVIDER	
210	90237-0157		1	LOCK BOLT, 1000-230	
220	90237-0320		1	LOCK HOUSING, 1000-U136	
240	970215-0000		2	STOP BLOCK	
260	312125-0335		4	SCREW ISO 1207 M5X30 A4	
270	90194-0152		3	SIGN, EARTH	
280	2780072-0000		1	RAIL	
290	312605-0316		22	HEXAGON NUT, M6M M6 A280	
300	2601232-0000		1	FRAME	
310	312105-0366		2	SCREW M6S ISO 4017 M6X12 A480	
320	90135-0035		3	EARTH WIRE, L=250 MM 16 MM2	
330	90062-0022		18	LOCK WASHER D=6,4/11	
350	312605-0312		2	HEXAGON NUT, M6M M4 A280	
380	312125-0325		2	SCREW ISO 1207 M5X10 A4	
390	90181-0064		6	LOCK ZP1 FOR CHANNEL T1	
400	352113-0205		3	ANCHOR PLATES FOR STRIPS, TYPE TM2S8-C10	
410	312132-0287		3	SLOTTED HEAD, PAN SCREW, MSCS M4X8	
430	90287-0124		12	SCREW PAN HEAD MSCS M4X12 NYLON	
450	359241-0201		1	SIGN: " HOUR METER"	
490	311520-0320		6	RIVET, BLANK 2,4X6	
510	2530284-0000		1	GASKET	
520	2530285-0000		1	GASKET	
530	2563173-0000		4	PROFILE	
540	2563174-0000		1	PROFILE	
600	312125-0289		4	SCREW ISO 1207 M4X10 A4	
610	2601230-0000		4	BRACKET	
620	2606216-0000		1	BRACKET	
630	2608177-0000		3	SIGN	
660	2675521-0000		1	RAIL	
710	312125-0285		4	SCREW ISO 1207 M4X6 A4	
750	90459-1738		1	MANDATORY ACTION SIGN ISO, READ MAINTENA	
820	90459-3352		5	FLAT PIN SOCKET, 6,3X0,8	
860	90144-0072	MM	100	TAPE SCOTCH VHBS 4945 W=12,7MM	
A450	90453-0002		1	MODEM MD-12 DC	
A451	2518145-0101		1	FLEXBOX TETRA BRIK	**9-169**
F054	90459-5811		1	RESIDUAL CURRENT DEVICE, FI-25/2/003-A	
S003	90111-0122		1	KEY SWITCH, 2 NO CONTACTS	
S003:1	359241-0133		1	SIGN: " SERVICE SWITCH"	
S004	90111-0124		1	KEY SWITCH, 1NO,1NC CONTACT	
S004:1	359241-0122		1	SIGN: " CLEANING STEAM BARRIER SPACE"	
W450	1254442-0000		1	CABLE SERIAL	
X011	90001-0033		1	WALL SOCKET, E1834666	
X451	90110-0028		1	CONTACT UNIT 4-POLEADAPTER	
Z006	90459-1359		1	FILTER 1 A, 250 VAC, FN 332-1/05	

Machine Type | Group Description | Used-In | Group Number | Page No

This page is intentionally left blank.

Pos	Part No	UN	Qty	Description	Page No

SEE PREVIOUS LISTS PAGES: 9-149, 9-151.

Pos	Part No	UN	Qty	Description	Page No

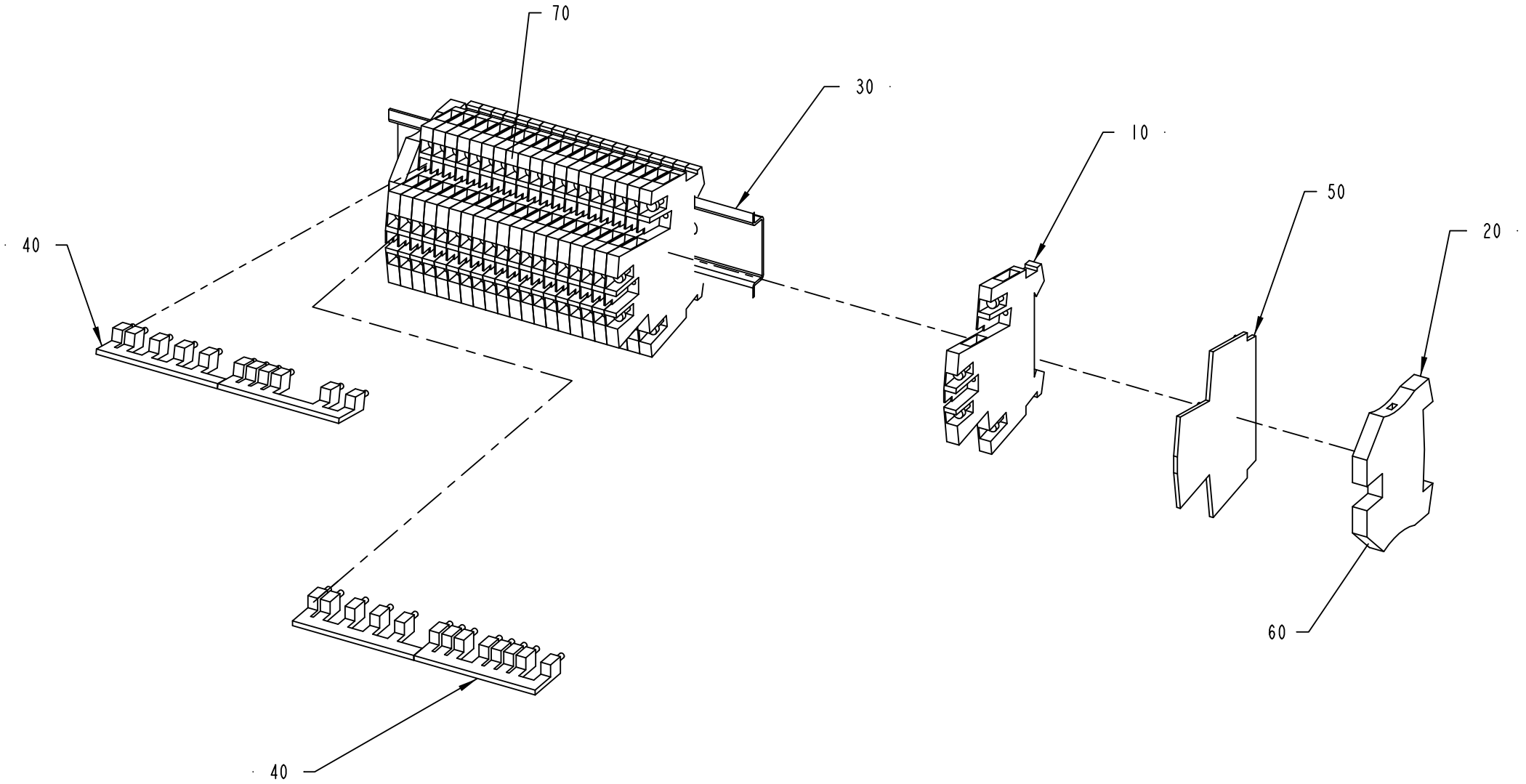

1532901-1
ECM 117324

ECM: 184921 - 20040928
Group number: 1532901-0100
Assembly Drawing: 1532901-1_1_AA

Pos	Part No	UN	Qty	Description	Page No
-					
010	353021-0120		20	FEED THROUGH TERMINAL, 10215.8	
020	353024-0205		2	EARTH TERMINAL, 1010.1	
030	2558937-0000		1	RAIL	
040	353034-0030		4	BRIDGE CONNECTOR WQV 2,5/10, 10544.6	
050	353032-0010		1	END PLATE WAP	
060	359011-0834		1	SET OF SIGNS 6-GW(EARTH)	
070	359011-0807		2	MARKING PLATES 5-FW 1-50	

Pos	Part No	UN	Qty	Description	Page No

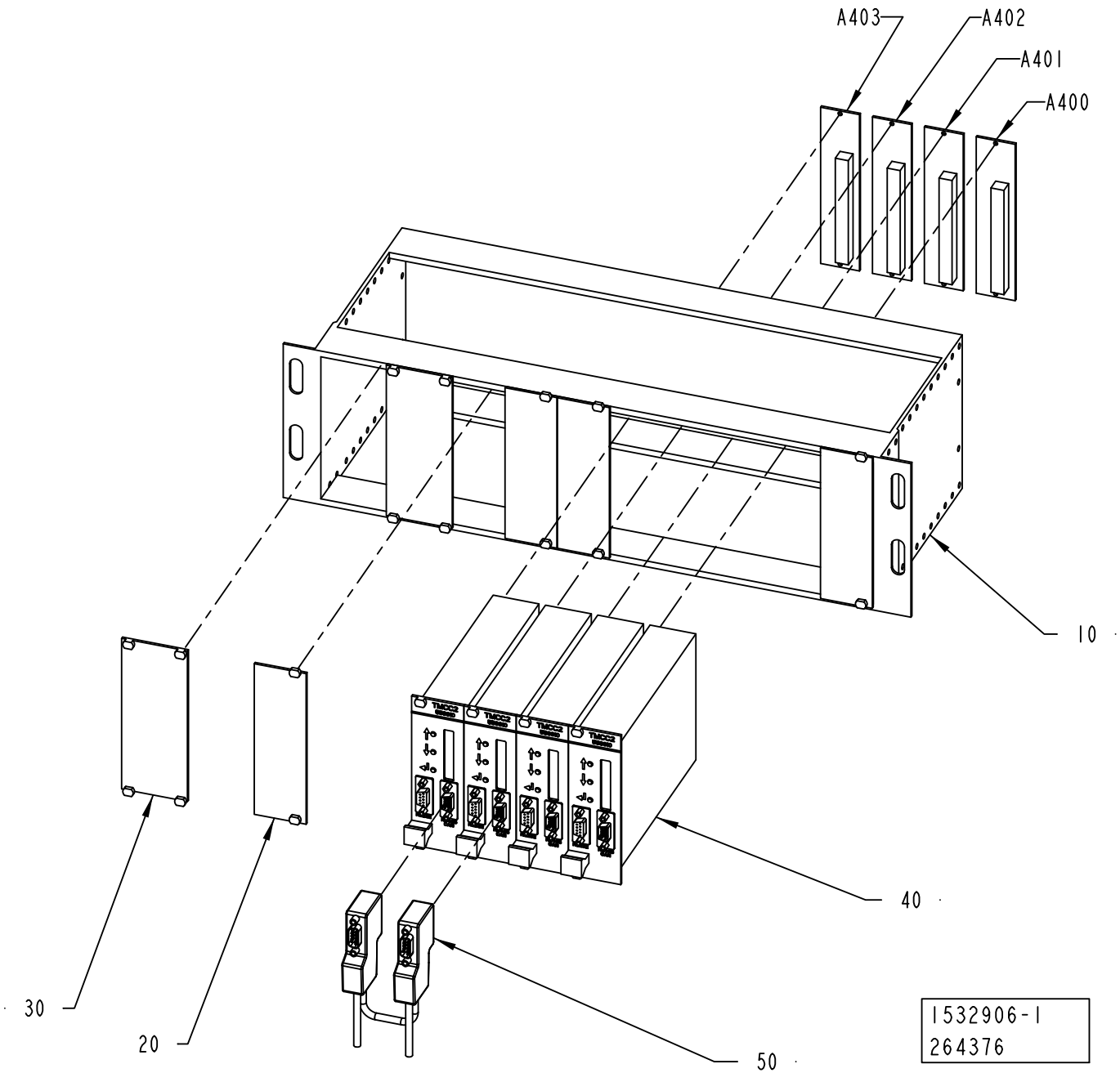
A403
A402
A401
A400
10
40
30
20
50
1532906-1
264376

ECM: 315256 - 20080404
Group number: 1532906-0100
Assembly Drawing: 1532906-1_1_AB

Pos	Part No	UN	Qty	Description	Page No
A3/FLEX					
020	68445-0104		4	FRONT PLATE 8 TE	
010 4	*543921-0004*		*1*	*COMPONENTS WITHOUT TP-NO*	
030	68445-0105		2	FRONT PLATE 10TE	
010 5	*543921-0005*		*1*	*COMPONENTS WITHOUT TP-NO*	
040	559810-0101		4	TMCC2 CONTROLLER	
050	2846698-0000		1	CABLE	
A400	68262-0101		1	BACKPLANE FRONT RACK 8TE	
100	*543371-0000*		*1*	*CIRCUIT BOARD 8TE*	
110	*551927-0001*		*1*	*COMPONENTS WITHOUNT TP-NO*	
120	*551928-0000*		*1*	*TERMINAL LABELS 8TE*	
A401	68262-0101		1	BACKPLANE FRONT RACK 8TE	
100	*543371-0000*		*1*	*CIRCUIT BOARD 8TE*	
110	*551927-0001*		*1*	*COMPONENTS WITHOUNT TP-NO*	
120	*551928-0000*		*1*	*TERMINAL LABELS 8TE*	
A402	68262-0101		1	BACKPLANE FRONT RACK 8TE	
100	*543371-0000*		*1*	*CIRCUIT BOARD 8TE*	
110	*551927-0001*		*1*	*COMPONENTS WITHOUNT TP-NO*	
120	*551928-0000*		*1*	*TERMINAL LABELS 8TE*	
A403	68262-0101		1	BACKPLANE FRONT RACK 8TE	
100	*543371-0000*		*1*	*CIRCUIT BOARD 8TE*	
110	*551927-0001*		*1*	*COMPONENTS WITHOUNT TP-NO*	
120	*551928-0000*		*1*	*TERMINAL LABELS 8TE*	
Common Parts					
010	67388-0102		1	RACK FRONTMOUNTED 84TE	
020 2	*542038-0002*		*1*	*COMPONENTS WITHOUT TP-NO*	

Pos	Part No	UN	Qty	Description	Page No

This page is intentionally left blank.

ECM: 306285 - 20070701
Group number: 2885027-0100
Assembly Drawing: 2885027-1_1_AA

Pos	Part No	UN	Qty	Description	Page No
-					
10	353021-0120		12	FEED THROUGH TERMINAL, 10215.8	
20	353024-0205		4	EARTH TERMINAL, 1010.1	
30	2558937-0000		1	RAIL	
40	353032-0010		1	END PLATE WAP	
50	90459-6857		8	BUSBAR, 3-P 12 100A	

Pos	Part No	UN	Qty	Description	Page No

This page is intentionally left blank.

ECM: 360659 - 20081001
Group number: 2885025-0100
Assembly Drawing:

Pos	Part No	UN	Qty	Description	Page No
-					
10	67388-0102		1	RACK FRONTMOUNTED 84TE	**9-163**
30	68445-0105		2	FRONT PLATE 10TE	**9-165**
40	2846698-0000		1	CABLE	
A418	559810-0101		1	TMCC2 CONTROLLER	
A418.1	68262-0101		1	BACKPLANE FRONT RACK 8TE	**9-167**
A419	559810-0101		1	TMCC2 CONTROLLER	
A419.1	68262-0101		1	BACKPLANE FRONT RACK 8TE	**9-167**
A420	559810-0101		1	TMCC2 CONTROLLER	
A420.1	68262-0101		1	BACKPLANE FRONT RACK 8TE	**9-167**
A421	559810-0101		1	TMCC2 CONTROLLER	
A421.1	68262-0101		1	BACKPLANE FRONT RACK 8TE	**9-167**
A422	559810-0101		1	TMCC2 CONTROLLER	
A422.1	68262-0101		1	BACKPLANE FRONT RACK 8TE	**9-167**

Pos	Part No	UN	Qty	Description	Page No

Machine Type | Group Description | Used-In | Group Number | Page No

This page is intentionally left blank.

ECM: - -
Group number: 67388-0102
Assembly Drawing:

Pos	Part No	UN	Qty	Description	Page No	Pos	Part No	UN	Qty	Description	Page No
-											
020 2	542038-0002		1	COMPONENTS WITHOUT TP-NO							

This page is intentionally left blank.

ECM: - -
Group number: 68445-0105
Assembly Drawing:

Pos	Part No	UN	Qty	Description	Page No	Pos	Part No	UN	Qty	Description	Page No
-											
010 5	543921-0005		1	COMPONENTS WITHOUT TP-NO							

This page is intentionally left blank.

ECM: 188284 - 20041104
Group number: 68262-0101
Assembly Drawing:

Pos	Part No	UN	Qty	Description	Page No
-					
100	543371-0000		1	CIRCUIT BOARD 8TE	
110	551927-0001		1	COMPONENTS WITHOUNT TP-NO	
120	551928-0000		1	TERMINAL LABELS 8TE	

Pos	Part No	UN	Qty	Description	Page No

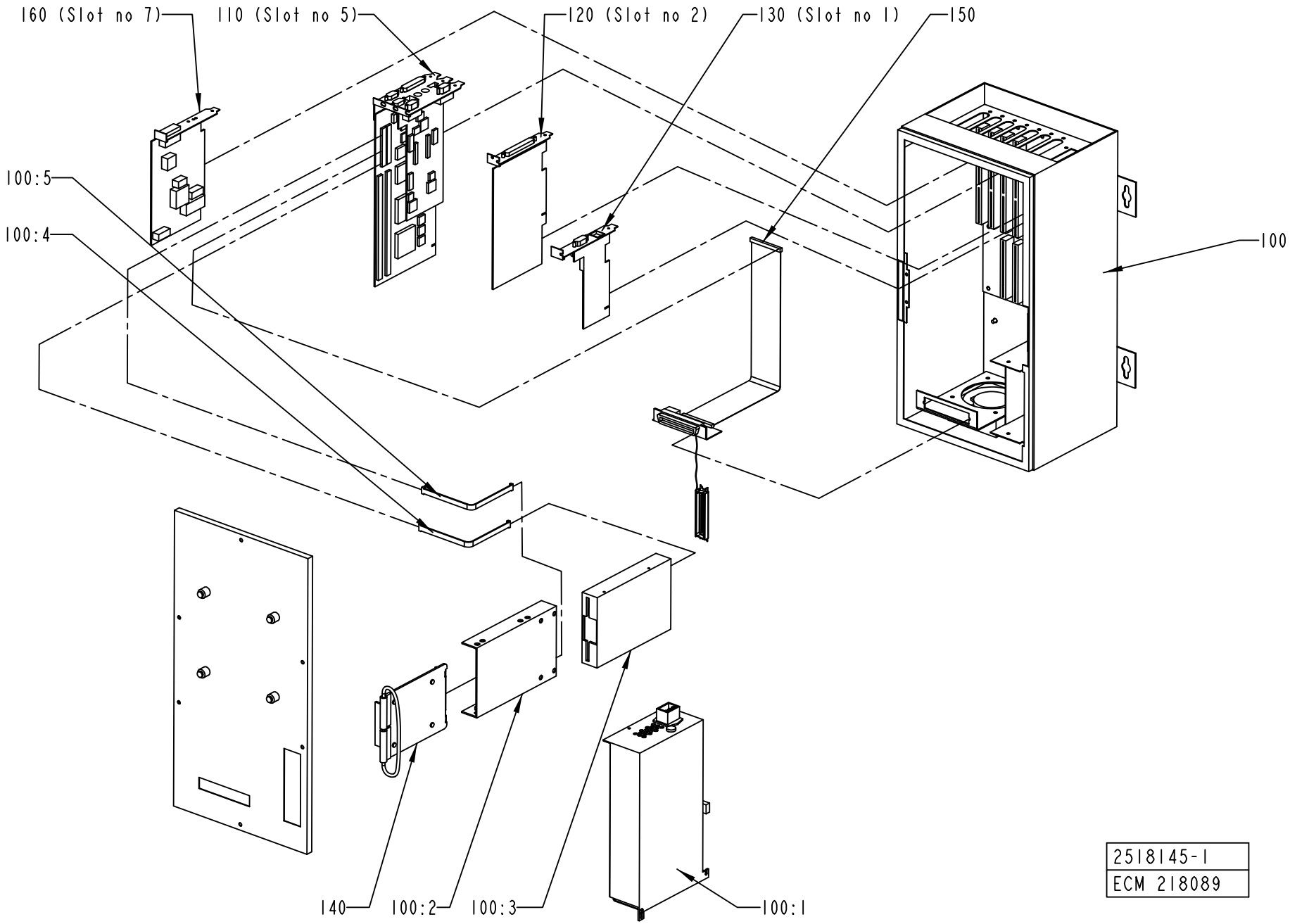
160 (Slot no 7)
110 (Slot no 5)
120 (Slot no 2)
130 (Slot no 1)
150
100:5
100:4
100
140
100:2
100:3
100:1
2518145-1
ECM 218089

ECM: 236016 - 20051006
Group number: 2518145-0101
Assembly Drawing: 2518145-1_1_AC

Pos	Part No	UN	Qty	Description	Page No
-					
100	90459-0275		1	PC ENCLOSURE FLEX BOX ISIC, 02760-000	**9-171**
110	90459-0284		1	PROCESSOR BOARD CLIPS V, 02021-000	
120	90459-1352		1	PCI COMMUNICATION INTERFACE PCI-1612B-A	
130	90459-0261		1	ETHERNET NETW. INTERFACE CARD, 01181-000	
140	90459-6472		1	HARD DISC 2,5" , 03589-002	
150	90459-0291		1	CABLE CD UNIT, 01310-000	

Pos	Part No	UN	Qty	Description	Page No

PC ENCLOSURE FLEX BOX ISIC, 02760-000

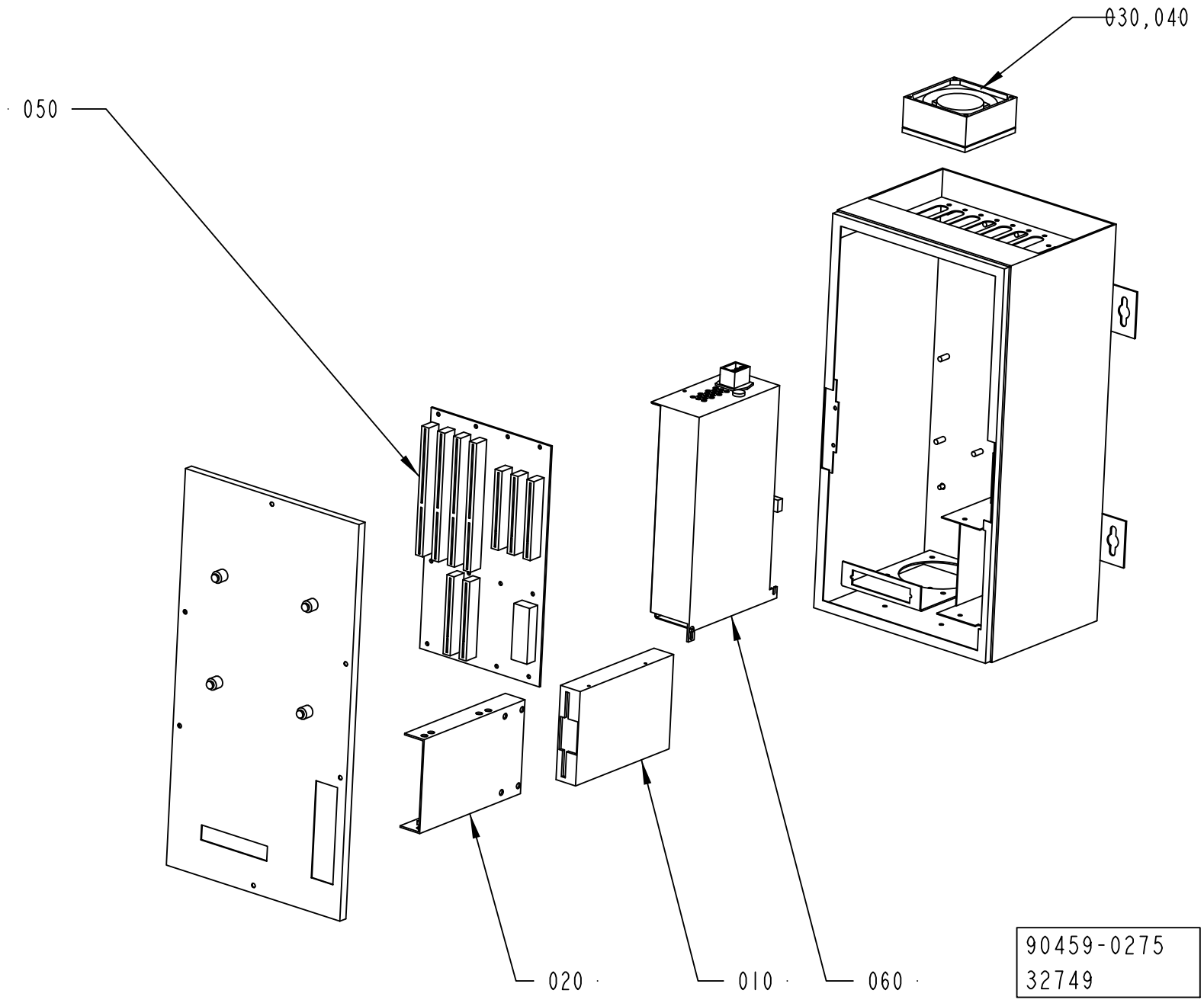

ECM: 190912 - 20041104
Group number: 90459-0275
Assembly Drawing: 90459-275_1_AB

Pos	Part No	UN	Qty	Description	Page No
-					
010	90041-0029		1	FLOPPY DISC UNIT FD-235HF 1,4MB	
020	90041-0091		1	PC 2,5" HD BAY, 02330-000	
030	90264-0064		1	FAN / FL 12G308	
040	90264-0350		1	FILTER / 554141	
050	90459-0262		1	BACKPLANE CARD AR-MB7P	
060	90459-0283		1	POWER SUPPLY UNIT, 02571-000	

Pos	Part No	UN	Qty	Description	Page No

Machine Type	Group Description	Used-In	Group Number	Page No

COOLING UNIT

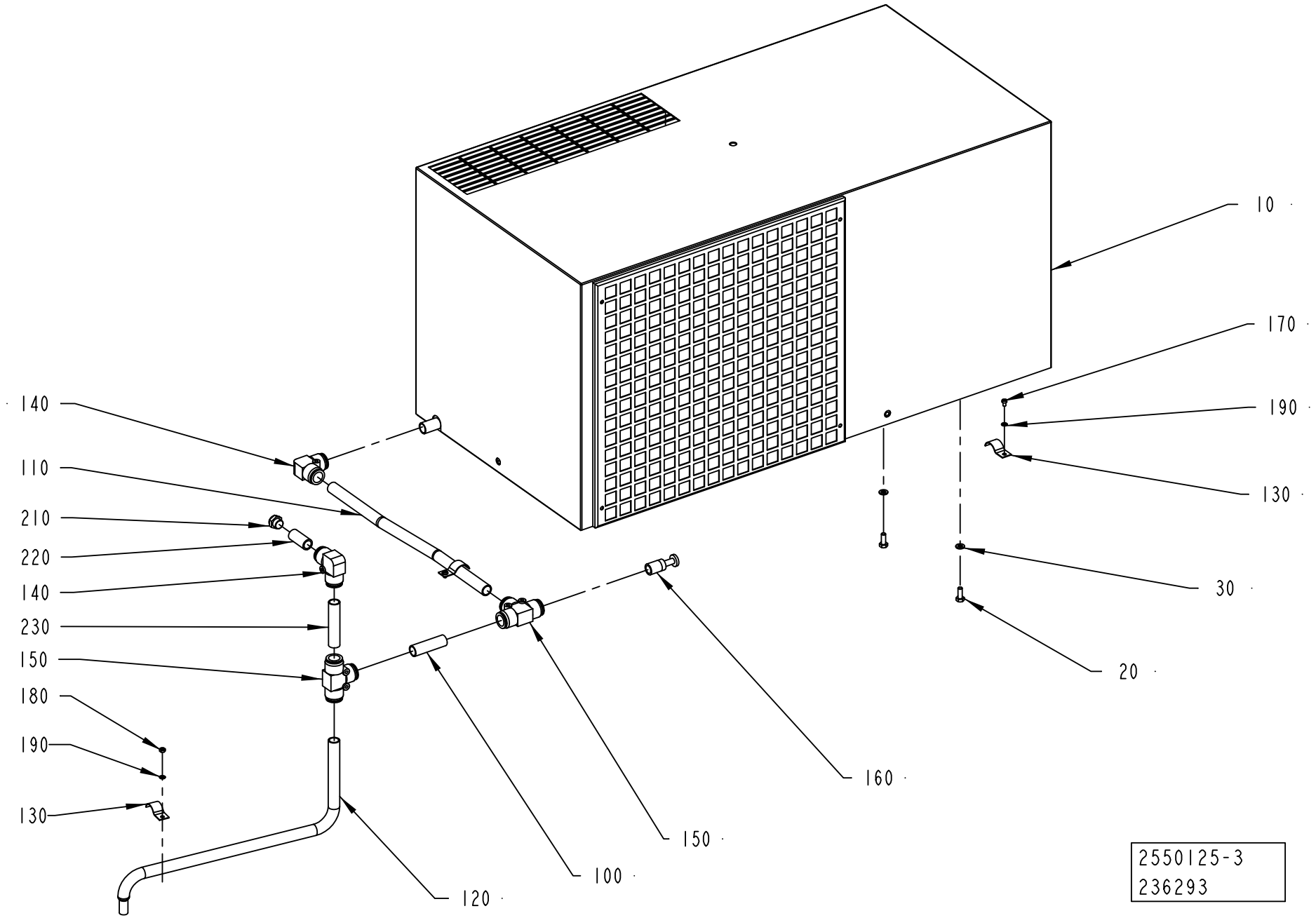

ECM: 306668 - 20070701
Group number: 2550125-0100
Assembly Drawing: 2550125-3_1_AA

Pos	Part No	UN	Qty	Description	Page No
A3/FLEX					
100	2601580-0000		1	HOSE	
110	2601581-0000		1	HOSE	
120	2601582-0000		1	HOSE	
130	90074-0011		3	CABLE CLIPS, D=14 MM	
140	90459-2553		2	ELBOW PIPE JOINT 16 MM	
180	312605-0312		1	HEXAGON NUT, M6M M4 A280	
190	315105-0136		3	WASHER BRB 4,3X8 RFR	
Common Parts					
010	90459-0363		1	COOLING UNIT, KB40A0721.03	
	90600-0676		*1*	*GRID, DISA1880AA*	
	90600-0675		*1*	*GASKET, A6411AA*	
	90600-0673		*1*	*THERMOSTAT, KELVIN TMI0000218*	
	90600-0672		*1*	*FAN, VBA0001499 , 50HZ_3UF , 60HZ_2UF*	
	90600-0670		*1*	*FAN, VBA0001508 ,50/60HZ 4UF*	
	90459-0364		*1*	*FILTER KB20/30/40 POLYURETH. FILTER 2001*	
020	312105-0368		6	SCREW M6S ISO 4017 M6X16 A480	
030	315105-0153		6	WASHER BRB 6,4X12 RFR	
150	90459-2555		2	T-CONNECTION 16MM	
160	90459-2557		1	BLIND PLUG 16 MM	
170	312125-0285		2	SCREW ISO 1207 M4X6 A4	
210	90257-0001		1	FILTER PLUG ART.NO.8145-00-140 TYPE F14	
220	2800104-0000		1	HOSE	
230	2800116-0000		1	HOSE	

Pos	Part No	UN	Qty	Description	Page No

Tetra Pak

SPC
Spare Parts Catalogue

This page is intentionally left blank.

ECM: 360803 - 20080701
Group number: 648561-0150
Assembly Drawing:

Pos	Part No	UN	Qty	Description	Page No
A3/FLEX DIMC/FLEX					
120	2550979-0000		1	TRANSPORT EQUIPMENT	
130	1558933-0000		1	FRAME	
140	90458-2138		2	SCREW M6S M12X120 A280	
150	312605-0322		4	HEXAGON NUT, M6M M12 A280	
160	315105-0178		4	WASHER BRB 13X24 RFR	
A3/FLEX PT/FLEX					
120	2550979-0000		1	TRANSPORT EQUIPMENT	
130	1558933-0000		2	FRAME	
140	90458-2138		4	SCREW M6S M12X120 A280	
150	312605-0322		8	HEXAGON NUT, M6M M12 A280	
160	315105-0178		8	WASHER BRB 13X24 RFR	
A3/FLEX TBA NODIMC, A3/FLEX TPA NODIMC, A3/FLEX TBA NOPT, A3/FLEX TPA NOPT					
120	2550979-0000		1	TRANSPORT EQUIPMENT	
130	1558933-0000		1	FRAME	
140	90458-2138		2	SCREW M6S M12X120 A280	
150	312605-0322		4	HEXAGON NUT, M6M M12 A280	
160	315105-0178		4	WASHER BRB 13X24 RFR	
A3/FLEX TGA NODIMC, A3/FLEX TGA NOPT					
120	2882178-0000		1	TRANSPORT EQUIPMENT	
130	1558933-0000		1	FRAME	
140	90458-2138		2	SCREW M6S M12X120 A280	
150	312605-0322		4	HEXAGON NUT, M6M M12 A280	
160	315105-0178		4	WASHER BRB 13X24 RFR	
DOMINO					
220	2775770-0102		1	BRACKET	**10-5**
Common Parts					
010	2555393-0150		1	START-UP KIT	**10-9**
030	531345-0200		1	PERSONAL PROTECT. EQ H2O2	**10-33**
040	2574483-0200		1	TOOLS AND TEMPLATES	**10-35**
050	2544873-0100		1	CONNECTION PIPE	**10-41**
060	90600-3339		1	PAPER REEL TROLLEY, TP A3	**10-43**
100	593682-0000		1	MACHINE SIGN, EEA(CE-MARK)	
110	311521-0142		4	RIVET, BLANK 3,2X6	
170	312105-0503		2	SCREW M6S ISO 4014 M10X60 A480	
180	315105-0173		2	WASHER BRB 10,5X22 RFR	
200	90459-6033		1	PROGRAMMING CABLE FOR PLUTO 20-070-56	
210	2764527-0100		1	ACCESSORIES	**10-53**

Pos	Part No	UN	Qty	Description	Page No

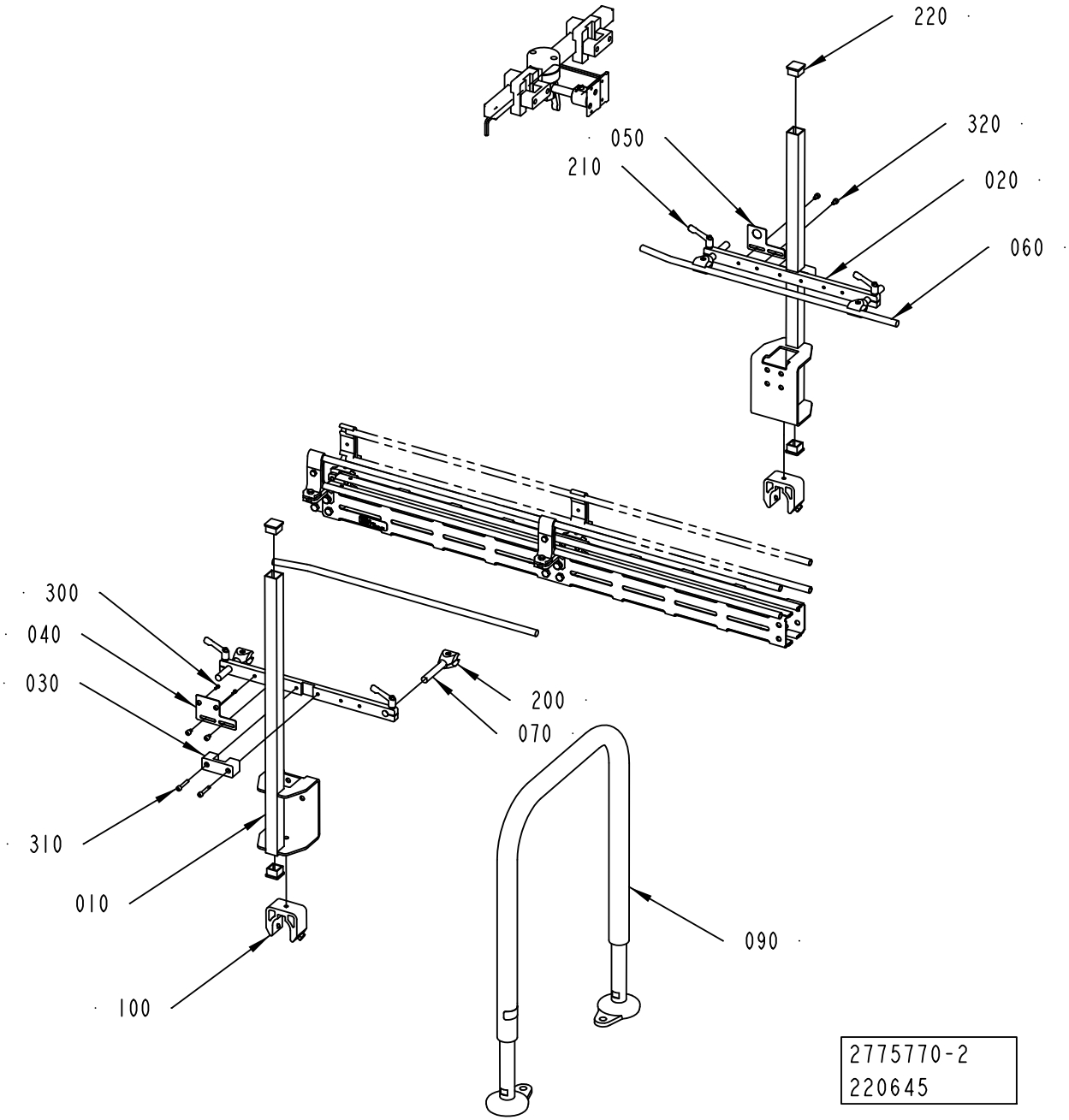
220
320
050
210
020
060
300
040
030
200
070
310
010
090
100
2775770-2
220645

ECM: 220645 -
Group number: 2775770-0102
Assembly Drawing: 2775770-2_1_AA

Pos	Part No	UN	Qty	Description	Page No
CONVEYOR PC23					
010	2895213-0000		2	BRACKET	
090	2807605-0101		1	LEG,CONVEYOR	**10-7**
100	2807592-0000		2	MULTI BRACKET SINGLE	
Common Parts					
020	2763627-0000		2	BRACKET	
030	2763628-0000		2	BRACKET	
040	2763632-0000		1	PLATE	
050	2763633-0000		1	PLATE	
060	2763629-0000		2	RAILING	
070	2775586-0000		4	BRACKET	
200	90068-0312		4	CLAMPING PIECE, T 12 / 12	
210	90458-2911		4	LOCKING HANDLE, M6/M	
220	90261-0048		4	SQUARE PLUG GPN 260/Q2525	
300	312115-0222		2	SCREW ISO4762 M3X8 A4 80	
310	312115-0335		4	SCREW ISO4762 M5X30 A4 80	
320	312115-0323		4	SCREW ISO4762 M5X8 A4 80	

Pos	Part No	UN	Qty	Description	Page No

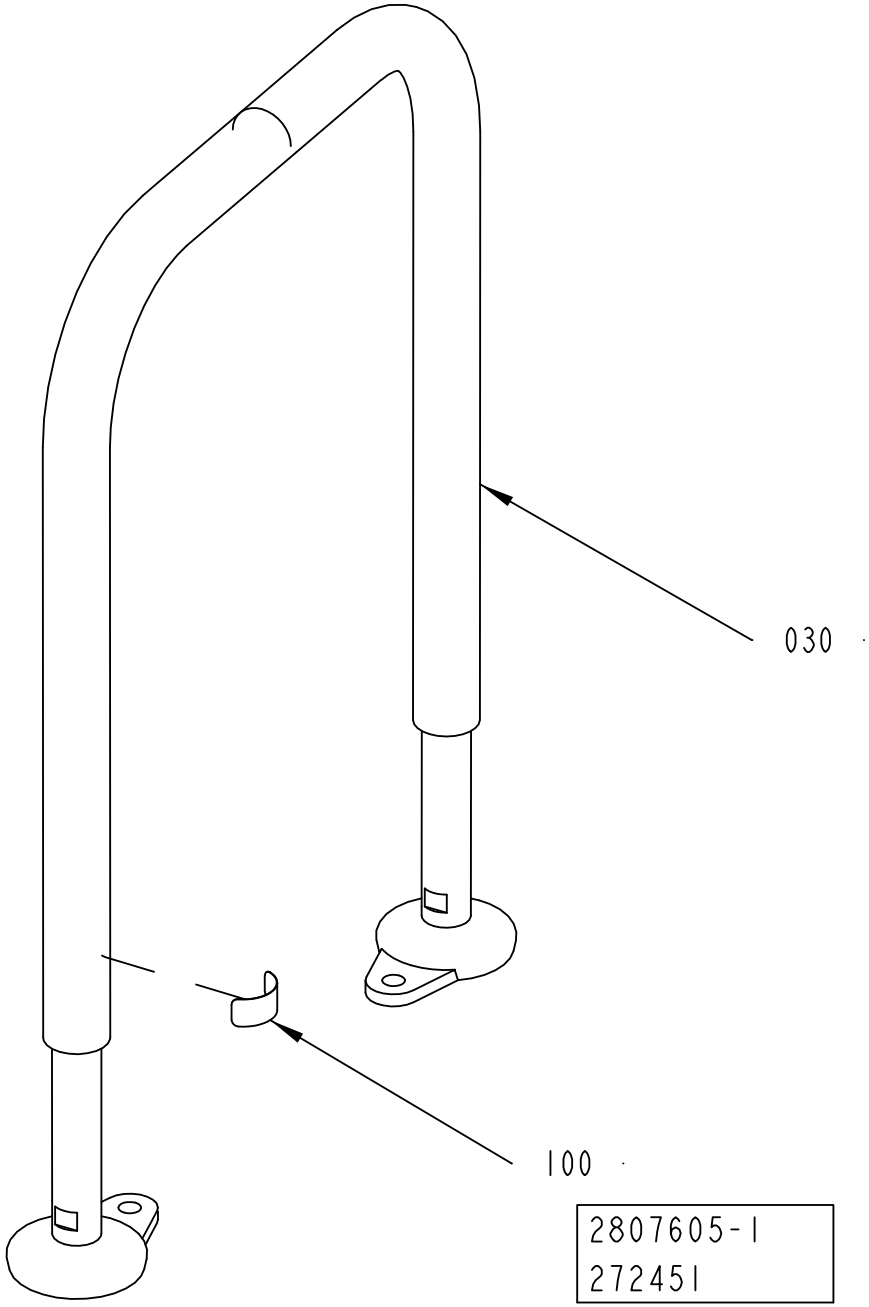
030
100
2807605-1
272451

ECM: 272451 -
Group number: 2807605-0101
Assembly Drawing: 2807605-1_1_AA

Pos	Part No	UN	Qty	Description	Page No
-					
030	2807615-0000		1	LEG,CONVEYOR	
100	1086870-0000		1	SIGN	

Pos	Part No	UN	Qty	Description	Page No

This page is intentionally left blank.

ECM: 301047 - 20070701
Group number: 2555393-0150
Assembly Drawing:

Pos	Part No	UN	Qty	Description	Page No
A3/FLEX QC					
020	2593831-0100		1	VOLUME KIT	**10-11, 10-13**
Common Parts					
010	2555394-0150		1	START-UP KIT	**10-15, 10-17, 10-19, 10-21, 10-23, 10-25**
100	90296-0009		1	SILICONE GREASE DOW CORNING 150 GR.	
AS010	1484695-0000		1	KNIFE	
AS020	2592780-0000		1	DOLLY	
DS010	90296-0068		1	SHELL ALVANIA GREASE EP 2	
DS020	1548454-0000		8	DISC	
EC010	90233-0028		10	TUBE FUSE 10A, A070GRB10T13 G330010	
EC020	90233-0029		3	TUBE FUSE 25A, A070GRB25T13 L330014	
EC030	90233-0027		3	TUBE FUSE 16A, A070GRB16T13 J330012	
	90233-0305		*1*	*INDICATOR*	
EC040	90459-1254		10	TUBE FUSE, 4A 500V	
JS010	28509-0000		2	WASHER	
JS020	32544-0000		2	INSULATION NUT	
JS030	107426-0000		4	GUIDE SLEEVE	
JS040	1036584-0000		4	WASHER	
JS050	315211-0104		4	BONDED SEAL SS/NBR90 M8	
JS060	312115-0297		8	SCREW ISO4762 M4X25 A4 80	
JS070	312125-0295		2	SCREW ISO 1207 M4X20 A4	
JS080	315211-0103		4	BONDED SEAL SS/NBR90 M6	
JS090	315202-0101		8	O-RING 3,1X1,6 MM	
MB010	315229-0105		5	GASKETS, 48,5X55,5X3,7 MM 2" FDA	
MB020	315229-0104		2	GASKETS, 35,8X42,8X3,7 MM 1"1/2 FD	
MB030	315229-0103		2	GASKETS, 23,1X30,1X3,7 MM 1" FDA	
MB040	315229-0107		1	GASKETS, 73,9X80,9X3,7 MM 2"1/2 FD	
MB050	90036-0057		3	LIGHT BULB, BA9S 28V	
SA010	1498047-0000		1	SEALING BLOCK	
SU010	1296877-0100		1	SEAL KIT	**10-27**
SU020	1296878-0100		1	SEAL KIT	**10-29**
SU030	1296879-0100		1	SEAL KIT	**10-31**
SU040	90217-0348		4	GASKET 35,4X46,8X4 MM	
SU050	342850-0304		5	GASKET 35,4X49,1X5,2 1"1/2 FDA	
SU060	925998-0000		2	DIAPHRAGM	
SU070	342850-0306		4	GASKET 60,3X76,1X5,2 MM 2"1/2 FDA 3-A	
SU080	342850-0304		4	GASKET 35,4X49,1X5,2 1"1/2 FDA	

Pos	Part No	UN	Qty	Description	Page No

Machine Type | Group Description | Used-In | Group Number | Page No

This page is intentionally left blank.

ECM: 355077 - 20081001
Group number: 2593831-0100
Assembly Drawing:

This list covers pages from 10-10 to 10-13

Pos	Part No	UN	Qty	Description	Page No
TPA 1000SQ					
010	2705813-0101		2	VOLUME FLAP	
020	2705812-0101		2	VOLUME FLAP	
030	2527703-0125		1	GUIDE	
040	2527704-0125		1	GUIDE	
080	2663373-0000		8	BOTTOM	
100	2705814-0103		1	PUSHER	
110	2658239-0000		8	BOTTOM	
TBA 0200B					
010	2594512-0103		2	VOLUME FLAP	
010	2594512-0105		2	VOLUME FLAP	
020	1548460-0103		2	VOLUME FLAP	
020	1548460-0105		2	VOLUME FLAP	
030	2527703-0103		1	GUIDE	
030	2527703-0104		1	GUIDE	
040	2527704-0103		1	GUIDE	
040	2527704-0104		1	GUIDE	
TBA 0200M					
010	2594512-0106		2	VOLUME FLAP	
020	1548460-0106		2	VOLUME FLAP	
030	2527703-0110		1	GUIDE	
040	2527704-0110		1	GUIDE	
TBA 0200SQ					
010	2594512-0111		2	VOLUME FLAP	
020	1548460-0111		2	VOLUME FLAP	
030	2527703-0128		1	GUIDE	
040	2527704-0128		1	GUIDE	
TBA 0250B					
010	2594512-0103		2	VOLUME FLAP	
010	2594512-0104		2	VOLUME FLAP	
020	1548460-0103		2	VOLUME FLAP	
020	1548460-0104		2	VOLUME FLAP	
030	2527703-0103		1	GUIDE	
030	2527703-0105		1	GUIDE	
040	2527704-0103		1	GUIDE	
040	2527704-0105		1	GUIDE	
TBA 0250S					
010	2594512-0107		2	VOLUME FLAP	
020	1548460-0107		2	VOLUME FLAP	
030	2527703-0111		1	GUIDE	
040	2527704-0111		1	GUIDE	
TBA 0250SQ					
010	2594512-0110		2	VOLUME FLAP	
020	1548460-0110		2	VOLUME FLAP	
030	2527703-0127		1	GUIDE	
040	2527704-0127		1	GUIDE	
TBA 0330S					
010	2594512-0104		2	VOLUME FLAP	
010	2594512-0105		2	VOLUME FLAP	
020	1548460-0104		2	VOLUME FLAP	
020	1548460-0105		2	VOLUME FLAP	
030	2527703-0104		1	GUIDE	
030	2527703-0105		1	GUIDE	
040	2527704-0104		1	GUIDE	
040	2527704-0105		1	GUIDE	
080	2603489-0000		8	BOTTOM	
TBA 0500B					
010	2594512-0101		2	VOLUME FLAP	
020	1548460-0101		2	VOLUME FLAP	
030	2527703-0101		1	GUIDE	
040	2527704-0101		1	GUIDE	
050	1285023-0000		1	SIDE PLATE	
060	1285022-0000		1	SIDE PLATE	
TBA 0500SQ					
010	2594512-0201		2	VOLUME FLAP	
020	1548460-0201		2	VOLUME FLAP	
030	2527703-0129		1	GUIDE	
040	2527704-0129		1	GUIDE	
050	1285023-0000		1	SIDE PLATE	
060	1285022-0000		1	SIDE PLATE	
080	2796652-0000		8	BOTTOM	
TBA 1000B					
010	2594512-0102		2	VOLUME FLAP	
020	1548460-0102		2	VOLUME FLAP	
030	2527703-0102		1	GUIDE	
040	2527704-0102		1	GUIDE	
050	2605993-0000		1	SIDE PLATE	
060	2605994-0000		1	SIDE PLATE	
TBA 1000SQ					
010	2594512-0202		2	VOLUME FLAP	
020	1548460-0202		2	VOLUME FLAP	
030	2527703-0130		1	GUIDE	
040	2527704-0130		1	GUIDE	
050	2854963-0000		1	SIDE PLATE	

Machine Type | Group Description | Used-In | Group Number | Page No

This page is intentionally left blank.

Pos	Part No	UN	Qty	Description	Page No
TBA 1000SQ (Cont'd)					
060	2854964-0000		1	SIDE PLATE	
TBA 1890S					
010	2695955-0102		2	VOLUME FLAP	
020	2695955-0102		2	VOLUME FLAP	
030	2527703-0109		1	GUIDE	
040	2527704-0109		1	GUIDE	
080	2616219-0000		8	BOTTOM	
TBA 2000S					
010	2695955-0101		2	VOLUME FLAP	
020	2695955-0101		2	VOLUME FLAP	
030	2527703-0108		1	GUIDE	
040	2527704-0108		1	GUIDE	
080	2616218-0000		8	BOTTOM	
TPA 0200SQ					
010	2594512-0108		2	VOLUME FLAP	
020	1548460-0108		2	VOLUME FLAP	
030	2527703-0120		1	GUIDE	
040	2527704-0120		1	GUIDE	
100	2705814-0102		1	PUSHER	
TPA 0250SQ					
010	2594512-0109		2	VOLUME FLAP	
020	1548460-0109		2	VOLUME FLAP	
030	2527703-0121		1	GUIDE	
040	2527704-0121		1	GUIDE	
100	2705814-0101		1	PUSHER	
TPA 0750SQ					
010	2705813-0102		2	VOLUME FLAP	
020	2705812-0102		2	VOLUME FLAP	
030	2527703-0126		1	GUIDE	
040	2527704-0126		1	GUIDE	
080	2658240-0000		8	BOTTOM	
100	2705814-0104		1	PUSHER	
110	2658240-0000		8	BOTTOM	

Pos	Part No	UN	Qty	Description	Page No

This page is intentionally left blank.

ECM: 331132 - 20080624
Group number: 2555394-0150
Assembly Drawing:

This list covers pages from 10-14 to 10-25

Pos	Part No	UN	Qty	Description	Page No
TPA 0330SQ HI					
JS010	1110083-0002		12	DOLLY	
JS020	1520167-0000		2	INDUCTOR	
JS030	1539902-0000		8	VOLUME SHIM	
JS040	1348966-0000		2	KNIFE	
JS060	2774493-0000		2	COMPRESSION SPRING	
SU010	257330-0000		3	PRESSURE ROLLER (10 PCS)	
SU020	2529417-0000		1	SHAFT	
SU030	315204-0215		2	O-RING 19,2X3 MM	
SU040	2500081-0000		1	ELBOW PIPE	
SU050	2529750-0000		1	COVERING PANEL	
SU060	979813-0000		1	PLUG	
SU070	342850-0304		1	GASKET 35,4X49,1X5,2 1"1/2 FDA	
TPA 0500SQ HI					
JS010	1110083-0002		12	DOLLY	
JS020	2587467-0000		1	INDUCTOR	
JS020	2587466-0000		1	INDUCTOR	
JS030	1549830-0000		24	VOLUME SHIM	
JS040	1549828-0000		2	KNIFE	
JS060	1538109-0000		2	COMPRESSION SPRING	
SU010	257330-0000		3	PRESSURE ROLLER (10 PCS)	
SU020	2529420-0000		1	SHAFT	
SU030	315204-0219		2	O-RING 29,2X3 MM	
SU040	2500081-0000		1	ELBOW PIPE	
SU050	2529750-0000		1	COVERING PANEL	
SU060	979813-0000		1	PLUG	
SU070	342850-0304		1	GASKET 35,4X49,1X5,2 1"1/2 FDA	
TPA 0500SQ NOHI					
JS010	1110083-0002		12	DOLLY	
JS020	2587467-0000		1	INDUCTOR	
JS020	2587466-0000		1	INDUCTOR	
JS030	1549830-0000		24	VOLUME SHIM	
JS040	1549828-0000		2	KNIFE	
JS060	1538109-0000		2	COMPRESSION SPRING	
SU010	257330-0000		3	PRESSURE ROLLER (10 PCS)	
SU020	2529420-0000		1	SHAFT	
SU030	315204-0219		2	O-RING 29,2X3 MM	
TPA 0750SQ QC HI, TPA 1000SQ QC HI					
FF050	2945064-0000		3	FINGER	
JS010	1520633-0002		12	DOLLY	
JS020	2663378-0000		1	INDUCTOR	
JS020	2663377-0000		1	INDUCTOR	
JS030	2660393-0000		12	VOLUME SHIM	
JS035	2660390-0000		12	VOLUME SHIM	
JS040	1348956-0000		2	KNIFE	
JS060	1538109-0000		2	COMPRESSION SPRING	
SU010	257330-0000		6	PRESSURE ROLLER (10 PCS)	
SU020	2529420-0000		1	SHAFT	
SU030	315204-0219		2	O-RING 29,2X3 MM	
SU040	2500081-0000		1	ELBOW PIPE	
SU050	2529750-0000		1	COVERING PANEL	
SU060	979813-0000		1	PLUG	
SU070	342850-0304		1	GASKET 35,4X49,1X5,2 1"1/2 FDA	
TPA 1000SQ NOQC HI					
JS010	1520633-0002		12	DOLLY	
JS020	2663378-0000		1	INDUCTOR	
JS020	2663377-0000		1	INDUCTOR	
JS035	1539843-0000		6	VOLUME SHIM	
JS040	1348956-0000		2	KNIFE	
JS060	1538109-0000		2	COMPRESSION SPRING	
SU010	257330-0000		6	PRESSURE ROLLER (10 PCS)	
SU020	2529420-0000		1	SHAFT	
SU030	315204-0219		2	O-RING 29,2X3 MM	
SU040	2500081-0000		1	ELBOW PIPE	
SU050	2529750-0000		1	COVERING PANEL	
SU060	979813-0000		1	PLUG	
SU070	342850-0304		1	GASKET 35,4X49,1X5,2 1"1/2 FDA	
TBA 1000S LIGHTCAP					
	90240-0180		12	FLANGE BUSHING 10X14X15MM	
JS010	1110083-0002		12	DOLLY	
JS020	1566843-0000		2	INDUCTOR	
JS030	1040755-0000		8	VOLUME SHIM	
JS040	1348955-0000		2	KNIFE	
JS060	1538109-0000		2	COMPRESSION SPRING	
JS100	2767478-0004		2	ROLLER	
JS100	2767478-0003		2	ROLLER	
JS100	2767478-0001		2	ROLLER	
SU010	499387-0000		3	PRESSURE ROLLER - (10 PCS)	
SU020	2529419-0000		1	SHAFT	
SU030	315204-0219		2	O-RING 29,2X3 MM	
SU080	2811775-0000		1	SEAL	
TBA 1000S NOMOLDEDCAP HI					
JS010	1110083-0002		12	DOLLY	
JS020	1110937-0000		2	INDUCTOR	

Machine Type Group Description Used-In Group Number Page No

This page is intentionally left blank.

ECM: 331132 - 20080624
Group number: 2555394-0150
Assembly Drawing:

This list covers pages from 10-14 to 10-25

Pos	Part No	UN	Qty	Description	Page No
TBA 1000S NOMOLDEDCAP HI (Cont'd)					
JS030	1040755-0000		8	VOLUME SHIM	
JS040	1348955-0000		2	KNIFE	
JS060	1538109-0000		2	COMPRESSION SPRING	
SU010	499387-0000		3	PRESSURE ROLLER - (10 PCS)	
SU020	2529419-0000		1	SHAFT	
SU030	315204-0219		2	O-RING 29,2X3 MM	
SU040	2500081-0000		1	ELBOW PIPE	
SU050	2529750-0000		1	COVERING PANEL	
SU060	979813-0000		1	PLUG	
SU070	342850-0304		1	GASKET 35,4X49,1X5,2 1"1/2 FDA	
TBA 1000S NOMOLDEDCAP NOHI					
JS010	1110083-0002		12	DOLLY	
JS020	1110937-0000		2	INDUCTOR	
JS030	1040755-0000		8	VOLUME SHIM	
JS040	1348955-0000		2	KNIFE	
JS060	1538109-0000		2	COMPRESSION SPRING	
SU010	499387-0000		3	PRESSURE ROLLER - (10 PCS)	
SU020	2529419-0000		1	SHAFT	
SU030	315204-0219		2	O-RING 29,2X3 MM	
TBA 1000S STDA7 HI					
	90240-0180		12	FLANGE BUSHING 10X14X15MM	
JS010	1110083-0002		12	DOLLY	
JS020	2546474-0000		2	INDUCTOR	
JS030	1040755-0000		8	VOLUME SHIM	
JS040	1348955-0000		2	KNIFE	
JS060	1538109-0000		2	COMPRESSION SPRING	
JS100	2767478-0003		2	ROLLER	
JS100	2767478-0004		2	ROLLER	
JS100	2767478-0001		2	ROLLER	
SU010	499387-0000		3	PRESSURE ROLLER - (10 PCS)	
SU020	2529419-0000		1	SHAFT	
SU030	315204-0219		2	O-RING 29,2X3 MM	
SU040	2500081-0000		1	ELBOW PIPE	
SU050	2529750-0000		1	COVERING PANEL	
SU060	979813-0000		1	PLUG	
SU070	342850-0304		1	GASKET 35,4X49,1X5,2 1"1/2 FDA	
TBA 1000S STDA7 NOHI					
	90240-0180		12	FLANGE BUSHING 10X14X15MM	
JS010	1110083-0002		12	DOLLY	
JS020	2546474-0000		2	INDUCTOR	
JS030	1040755-0000		8	VOLUME SHIM	
JS040	1348955-0000		2	KNIFE	
JS060	1538109-0000		2	COMPRESSION SPRING	
JS100	2767478-0004		2	ROLLER	
JS100	2767478-0003		2	ROLLER	
JS100	2767478-0001		2	ROLLER	
SU010	499387-0000		3	PRESSURE ROLLER - (10 PCS)	
SU020	2529419-0000		1	SHAFT	
SU030	315204-0219		2	O-RING 29,2X3 MM	
TBA 1000SQ NOQC HI					
JS010	1110083-0002		12	DOLLY	
JS020	1110936-0000		2	INDUCTOR	
JS030	1487627-0000		8	VOLUME SHIM	
JS040	1348955-0000		2	KNIFE	
JS060	1538109-0000		2	COMPRESSION SPRING	
SU010	257330-0000		3	PRESSURE ROLLER (10 PCS)	
SU020	2529420-0000		1	SHAFT	
SU030	315204-0219		2	O-RING 29,2X3 MM	
SU040	2500081-0000		1	ELBOW PIPE	
SU050	2529750-0000		1	COVERING PANEL	
SU060	979813-0000		1	PLUG	
SU070	342850-0304		1	GASKET 35,4X49,1X5,2 1"1/2 FDA	
TBA 1000SQ NOQC NO HI					
JS010	1110083-0002		12	DOLLY	
JS020	1110936-0000		2	INDUCTOR	
JS030	1487627-0000		8	VOLUME SHIM	
JS040	1348955-0000		2	KNIFE	
JS060	1538109-0000		2	COMPRESSION SPRING	
SU010	257330-0000		3	PRESSURE ROLLER (10 PCS)	
SU020	2529420-0000		1	SHAFT	
SU030	315204-0219		2	O-RING 29,2X3 MM	
TBA 1000SQ QC NOHI, TBA 0500SQ QC NOHI					
JS010	1110083-0002		12	DOLLY	
JS020	1110936-0000		2	INDUCTOR	
JS030	1487627-0000		8	VOLUME SHIM	
JS030	2827055-0000		8	VOLUME SHIM	
JS040	1348955-0000		2	KNIFE	
JS060	1538109-0000		2	COMPRESSION SPRING	
SU010	257330-0000		3	PRESSURE ROLLER (10 PCS)	
SU020	2529420-0000		1	SHAFT	
SU030	315204-0219		2	O-RING 29,2X3 MM	
TBA 1500S HI					
JS010	1110083-0002		12	DOLLY	

Machine Type | Group Description | Used-In | Group Number | Page No

This page is intentionally left blank.

ECM: 331132 - 20080624
Group number: 2555394-0150
Assembly Drawing:

This list covers pages from 10-14 to 10-25

Pos	Part No	UN	Qty	Description	Page No
TBA 1500S HI (Cont'd)					
JS020	1110938-0000		2	INDUCTOR	
JS030	1349208-0000		8	VOLUME SHIM	
JS040	1348955-0000		2	KNIFE	
JS060	1538109-0000		2	COMPRESSION SPRING	
SU010	232979-0000		3	PRESSURE ROLLER (PAK OF 10)	
SU020	2523268-0000		1	SHAFT	
SU030	315204-0219		2	O-RING 29,2X3 MM	
SU040	2500081-0000		1	ELBOW PIPE	
SU050	2529750-0000		1	COVERING PANEL	
SU060	979813-0000		1	PLUG	
SU070	342850-0304		1	GASKET 35,4X49,1X5,2 1"1/2 FDA	
TBA 1500S NOHI					
JS010	1110083-0002		12	DOLLY	
JS020	1110938-0000		2	INDUCTOR	
JS030	1349208-0000		8	VOLUME SHIM	
JS040	1348955-0000		2	KNIFE	
JS060	1538109-0000		2	COMPRESSION SPRING	
SU010	232979-0000		3	PRESSURE ROLLER (PAK OF 10)	
SU020	2523268-0000		1	SHAFT	
SU030	315204-0219		2	O-RING 29,2X3 MM	
TBA 2000S HI, TBA 1890S HI, TBA 1400B HI					
JS010	1520633-0005		12	DOLLY	
JS020	1533046-0000		2	INDUCTOR	
JS030	2594891-0000		8	VOLUME SHIM	
JS035	2672745-0000		8	VOLUME SHIM	
JS035	2594890-0000		8	VOLUME SHIM	
JS040	2664761-0000		2	KNIFE	
JS060	1538109-0000		2	COMPRESSION SPRING	
SU010	232979-0000		6	PRESSURE ROLLER (PAK OF 10)	
SU030	315204-0223		2	O-RING 39,2X3 MM	
SU040	2500081-0000		1	ELBOW PIPE	
SU050	2529750-0000		1	COVERING PANEL	
SU060	979813-0000		1	PLUG	
SU070	342850-0304		1	GASKET 35,4X49,1X5,2 1"1/2 FDA	
TGA 0500SQ					
FF010	2838224-0000		4	SHIM	
FF040	2838228-0000		12	SHIM	
JS010	1520633-0002		12	DOLLY	
JS020	1566783-0000		2	INDUCTOR	
JS030	2909853-0000		8	SHIM	
JS040	1348956-0000		2	KNIFE	
JS060	1538109-0000		2	COMPRESSION SPRING	
SU010	257330-0000		3	PRESSURE ROLLER (10 PCS)	
SU020	2529420-0000		1	SHAFT	
SU030	315204-0219		2	O-RING 29,2X3 MM	
TGA 0750SQ					
FF010	2843899-0000		4	SHIM	
FF040	2843903-0000		12	SHIM	
JS010	1520633-0002		12	DOLLY	
JS020	1566783-0000		2	INDUCTOR	
JS030	2909852-0000		8	SHIM	
JS040	1348956-0000		2	KNIFE	
JS060	1538109-0000		2	COMPRESSION SPRING	
SU010	257330-0000		3	PRESSURE ROLLER (10 PCS)	
SU020	2529420-0000		1	SHAFT	
SU030	315204-0219		2	O-RING 29,2X3 MM	
TGA 1000SQ					
FF010	2743397-0000		4	SHIM	
FF020	2680332-0000		4	SHIM	
FF040	2878048-0000		4	SHIM	
JS010	1110083-0002		12	DOLLY	
JS020	1566783-0000		2	INDUCTOR	
JS030	2660293-0000		8	VOLUME SHIM	
JS040	1348956-0000		2	KNIFE	
JS060	1538109-0000		2	COMPRESSION SPRING	
SU010	257330-0000		3	PRESSURE ROLLER (10 PCS)	
SU020	2529420-0000		1	SHAFT	
SU030	315204-0219		2	O-RING 29,2X3 MM	
TPA 0200SQ QC HI, TPA 0250SQ QC HI					
JS010	1110083-0002		12	DOLLY	
JS020	1110930-0000		2	INDUCTOR	
JS030	1549594-0000		16	VOLUME SHIM	
JS030	2674328-0000		16	VOLUME SHIM	
JS040	1348966-0000		2	KNIFE	
JS060	2774493-0000		2	COMPRESSION SPRING	
SU010	272479-0000		3	PRESSURE ROLLER (10PCS)	
SU020	2529416-0000		1	SHAFT	
SU030	315204-0215		2	O-RING 19,2X3 MM	
SU040	2500081-0000		1	ELBOW PIPE	
SU050	2529750-0000		1	COVERING PANEL	
SU060	979813-0000		1	PLUG	
SU070	342850-0304		1	GASKET 35,4X49,1X5,2 1"1/2 FDA	
TPA 0250SQ NOQC HI					

Machine Type | Group Description | Used-In | Group Number | Page No

This page is intentionally left blank.

ECM: 331132 - 20080624
Group number: 2555394-0150
Assembly Drawing:

This list covers pages from 10-14 to 10-25

Pos	Part No	UN	Qty	Description	Page No
TPA 0250SQ NOQC HI (Cont'd)					
JS010	1110083-0002		12	DOLLY	
JS020	1110930-0000		2	INDUCTOR	
JS030	2674328-0000		16	VOLUME SHIM	
JS040	1348966-0000		2	KNIFE	
JS060	2774493-0000		2	COMPRESSION SPRING	
SU020	2529416-0000		1	SHAFT	
SU030	315204-0215		2	O-RING 19,2X3 MM	
SU040	2500081-0000		1	ELBOW PIPE	
SU050	2529750-0000		1	COVERING PANEL	
SU060	979813-0000		1	PLUG	
SU070	342850-0304		1	GASKET 35,4X49,1X5,2 1"1/2 FDA	
TBA 0200B HI, TBA 0250B HI, TBA 0330S HI					
JS010	1110083-0002		12	DOLLY	
JS020	1110932-0000		2	INDUCTOR	
JS030	1538637-0000		8	VOLUME SHIM	
JS030	1346158-0000		8	VOLUME SHIM	
JS030	2605166-0000		8	VOLUME SHIM	
JS030	2654290-0000		8	VOLUME SHIM	
JS040	1348966-0000		2	KNIFE	
JS060	2774493-0000		2	COMPRESSION SPRING	
SU010	257330-0000		3	PRESSURE ROLLER (10 PCS)	
SU020	2529418-0000		1	SHAFT	
SU030	315204-0215		2	O-RING 19,2X3 MM	
SU040	2500081-0000		1	ELBOW PIPE	
SU050	2529750-0000		1	COVERING PANEL	
SU060	979813-0000		1	PLUG	
SU070	342850-0304		1	GASKET 35,4X49,1X5,2 1"1/2 FDA	
TBA 0200B NOHI, TBA 0250B NOHI, TBA 0330S NOHI					
JS010	1110083-0002		12	DOLLY	
JS020	1110932-0000		2	INDUCTOR	
JS030	1346158-0000		8	VOLUME SHIM	
JS030	1538637-0000		8	VOLUME SHIM	
JS030	2605166-0000		8	VOLUME SHIM	
JS030	2654290-0000		8	VOLUME SHIM	
JS040	1348966-0000		2	KNIFE	
JS060	2774493-0000		2	COMPRESSION SPRING	
SU010	257330-0000		3	PRESSURE ROLLER (10 PCS)	
SU020	2529418-0000		1	SHAFT	
SU030	315204-0215		2	O-RING 19,2X3 MM	
TBA 0200S HI					
JS010	1110083-0002		12	DOLLY	
JS020	1110930-0000		2	INDUCTOR	
JS030	1037735-0000		8	VOLUME SHIM	
JS040	1348966-0000		2	KNIFE	
JS060	2774493-0000		2	COMPRESSION SPRING	
SU010	272479-0000		3	PRESSURE ROLLER (10PCS)	
SU020	2529416-0000		1	SHAFT	
SU030	315204-0215		2	O-RING 19,2X3 MM	
SU040	2500081-0000		1	ELBOW PIPE	
SU050	2529750-0000		1	COVERING PANEL	
SU060	979813-0000		1	PLUG	
SU070	342850-0304		1	GASKET 35,4X49,1X5,2 1"1/2 FDA	
TBA 0200S NOHI					
JS010	1110083-0002		12	DOLLY	
JS020	1110930-0000		2	INDUCTOR	
JS030	1037735-0000		8	VOLUME SHIM	
JS040	1348966-0000		2	KNIFE	
JS060	2774493-0000		2	COMPRESSION SPRING	
SU010	272479-0000		3	PRESSURE ROLLER (10PCS)	
SU020	2529416-0000		1	SHAFT	
SU030	315204-0215		2	O-RING 19,2X3 MM	
TBA 0200SQ NOHI, TBA 0250SQ NOHI					
JS010	1566845-0002		12	DOLLY	
JS020	2767760-0000		2	INDUCTOR	
JS030	2678839-0000		16	VOLUME SHIM	
JS030	2678717-0000		16	VOLUME SHIM	
JS040	1348966-0000		2	KNIFE	
JS060	2774493-0000		2	COMPRESSION SPRING	
SU010	2607089-0000		3	PRESSURE ROLLER	
SU020	2529418-0000		1	SHAFT	
SU030	315204-0215		2	O-RING 19,2X3 MM	
TBA 0250S HI, TBA 0200M HI					
JS010	1110083-0002		12	DOLLY	
JS020	1110931-0000		2	INDUCTOR	
JS030	2640139-0000		8	VOLUME SHIM	
JS030	2662169-0000		8	VOLUME SHIM	
JS040	1348966-0000		2	KNIFE	
JS060	2774493-0000		2	COMPRESSION SPRING	
SU010	272479-0000		3	PRESSURE ROLLER (10PCS)	
SU020	2529416-0000		1	SHAFT	
SU040	2500081-0000		1	ELBOW PIPE	
SU050	2529750-0000		1	COVERING PANEL	
SU060	979813-0000		1	PLUG	

Machine Type | Group Description | Used-In | Group Number | Page No

This page is intentionally left blank.

ECM: 331132 - 20080624
Group number: 2555394-0150
Assembly Drawing:

This list covers pages from 10-14 to 10-25

Pos	Part No	UN	Qty	Description	Page No
TBA 0250S HI, TBA 0200M HI (Cont'd)					
SU070	342850-0304		1	GASKET 35,4X49,1X5,2 1"1/2 FDA	
TBA 0250S NOHI, TBA 0200M NOHI					
JS010	1110083-0002		12	DOLLY	
JS020	1110931-0000		2	INDUCTOR	
JS030	2662169-0000		8	VOLUME SHIM	
JS030	2640139-0000		8	VOLUME SHIM	
JS040	1348966-0000		2	KNIFE	
JS060	2774493-0000		2	COMPRESSION SPRING	
SU010	272479-0000		3	PRESSURE ROLLER (10PCS)	
SU020	2529416-0000		1	SHAFT	
TBA 0250SQ HI, TBA 0200SQ HI					
JS010	1566845-0002		12	DOLLY	
JS020	2767760-0000		2	INDUCTOR	
JS030	2678839-0000		16	VOLUME SHIM	
JS030	2678717-0000		16	VOLUME SHIM	
JS040	1348966-0000		2	KNIFE	
JS060	2774493-0000		2	COMPRESSION SPRING	
SU010	2607089-0000		3	PRESSURE ROLLER	
SU020	2529418-0000		1	SHAFT	
SU030	315204-0215		2	O-RING 19,2X3 MM	
SU040	2500081-0000		1	ELBOW PIPE	
SU050	2529750-0000		1	COVERING PANEL	
SU060	979813-0000		1	PLUG	
SU070	342850-0304		1	GASKET 35,4X49,1X5,2 1"1/2 FDA	
TBA 0500B QC HI, TBA 1000B QC HI					
JS010	1110083-0002		12	DOLLY	
JS020	1110938-0000		2	INDUCTOR	
JS030	1511337-0000		8	VOLUME SHIM	
JS030	1511336-0000		8	VOLUME SHIM	
JS040	1348955-0000		2	KNIFE	
JS060	1538109-0000		2	COMPRESSION SPRING	
SU010	232979-0000		3	PRESSURE ROLLER (PAK OF 10)	
SU020	2523268-0000		1	SHAFT	
SU030	315204-0219		2	O-RING 29,2X3 MM	
SU040	2500081-0000		1	ELBOW PIPE	
SU050	2529750-0000		1	COVERING PANEL	
SU060	979813-0000		1	PLUG	
SU070	342850-0304		1	GASKET 35,4X49,1X5,2 1"1/2 FDA	
TBA 0500S HI					
JS010	1110083-0002		12	DOLLY	
JS020	1110934-0000		2	INDUCTOR	
JS030	1511253-0000		8	VOLUME SHIM	
JS040	1348956-0000		2	KNIFE	
JS060	1538109-0000		2	COMPRESSION SPRING	
SU010	499387-0000		3	PRESSURE ROLLER - (10 PCS)	
SU020	2529420-0000		1	SHAFT	
SU030	315204-0219		2	O-RING 29,2X3 MM	
SU040	2500081-0000		1	ELBOW PIPE	
SU050	2529750-0000		1	COVERING PANEL	
SU060	979813-0000		1	PLUG	
SU070	342850-0304		1	GASKET 35,4X49,1X5,2 1"1/2 FDA	
TBA 0500S NOHI					
JS010	1110083-0002		12	DOLLY	
JS020	1110934-0000		2	INDUCTOR	
JS030	1511253-0000		8	VOLUME SHIM	
JS040	1348956-0000		2	KNIFE	
JS060	1538109-0000		2	COMPRESSION SPRING	
SU010	499387-0000		3	PRESSURE ROLLER - (10 PCS)	
SU020	2529420-0000		1	SHAFT	
SU030	315204-0219		2	O-RING 29,2X3 MM	
TBA 1000B NOQC NOMOLDEDCAP HI					
JS010	1110083-0002		12	DOLLY	
JS020	1110938-0000		2	INDUCTOR	
JS030	1035831-0000		8	VOLUME SHIM	
JS040	1348955-0000		2	KNIFE	
JS060	1538109-0000		2	COMPRESSION SPRING	
SU010	232979-0000		3	PRESSURE ROLLER (PAK OF 10)	
SU020	2523268-0000		1	SHAFT	
SU030	315204-0219		2	O-RING 29,2X3 MM	
SU040	2500081-0000		1	ELBOW PIPE	
SU050	2529750-0000		1	COVERING PANEL	
SU060	979813-0000		1	PLUG	
SU070	342850-0304		1	GASKET 35,4X49,1X5,2 1"1/2 FDA	
TBA 1000B NOQC NOMOLDEDCAP NOHI					
JS010	1110083-0002		12	DOLLY	
JS020	1110938-0000		2	INDUCTOR	
JS030	1035831-0000		8	VOLUME SHIM	
JS040	1348955-0000		2	KNIFE	
JS060	1538109-0000		2	COMPRESSION SPRING	
SU010	232979-0000		3	PRESSURE ROLLER (PAK OF 10)	
SU020	2523268-0000		1	SHAFT	
SU030	315204-0219		2	O-RING 29,2X3 MM	
TBA 1000B NOQC STDA7 HI					

Machine Type | Group Description | Used-In | Group Number | Page No

This page is intentionally left blank.

Pos	Part No	UN	Qty	Description	Page No
TBA 1000B NOQC STDA7 HI (Cont'd)					
	90240-0180		8	FLANGE BUSHING 10X14X15MM	
JS010	1110083-0002		12	DOLLY	
JS020	2610956-0000		2	INDUCTOR	
JS030	1035831-0000		8	VOLUME SHIM	
JS040	1348955-0000		2	KNIFE	
JS060	1538109-0000		2	COMPRESSION SPRING	
JS100	2767478-0002		2	ROLLER	
JS100	2767478-0003		2	ROLLER	
SU010	232979-0000		3	PRESSURE ROLLER (PAK OF 10)	
SU020	2523268-0000		1	SHAFT	
SU030	315204-0219		2	O-RING 29,2X3 MM	
SU040	2500081-0000		1	ELBOW PIPE	
SU050	2529750-0000		1	COVERING PANEL	
SU060	979813-0000		1	PLUG	
SU070	342850-0304		1	GASKET 35,4X49,1X5,2 1"1/2 FDA	
TBA 1000B NOQC STDA7 NOHI					
	90240-0180		8	FLANGE BUSHING 10X14X15MM	
JS010	1110083-0002		12	DOLLY	
JS020	2610956-0000		2	INDUCTOR	
JS030	1035831-0000		8	VOLUME SHIM	
JS040	1348955-0000		2	KNIFE	
JS060	1538109-0000		2	COMPRESSION SPRING	
JS100	2767478-0003		2	ROLLER	
JS100	2767478-0002		2	ROLLER	
SU010	232979-0000		3	PRESSURE ROLLER (PAK OF 10)	
SU020	2523268-0000		1	SHAFT	
SU030	315204-0219		2	O-RING 29,2X3 MM	
TBA 1000B QC NOHI, TBA 0500B QC NOHI					
JS010	1110083-0002		12	DOLLY	
JS020	1110938-0000		2	INDUCTOR	
JS030	1511336-0000		8	VOLUME SHIM	
JS030	1511337-0000		8	VOLUME SHIM	
JS040	1348955-0000		2	KNIFE	
JS060	1538109-0000		2	COMPRESSION SPRING	
SU010	232979-0000		3	PRESSURE ROLLER (PAK OF 10)	
SU020	2523268-0000		1	SHAFT	
SU030	315204-0219		2	O-RING 29,2X3 MM	
Common Parts					
FF030	263673-0000		4	GASKET	
JS050	1037254-0000		12	SHIM	

Pos	Part No	UN	Qty	Description	Page No

This page is intentionally left blank.

ECM: 70850 - 19970729
Group number: 1296877-0100
Assembly Drawing:

Pos	Part No	UN	Qty	Description	Page No
-					
010	530589-0000		4	SEAL RING	
020	530588-0000		1	SEAL RING	
030	533169-0000		1	DIAPHRAGM	
040	539212-0000		1	GASKET	
050	90091-0266		2	SEAL RING 10,4X16,3X2,5 MM	
060	90207-0363		1	GASKET 75X85X1,8 MM 3" FDA 3-A	
070	90207-0365		1	GASKET 53X63X1,8 MM 2,5" FDA 3-A	
100	315204-0215		1	O-RING 19,2X3 MM	
110	315204-0301		1	O-RING 49,5X3 MM	

Pos	Part No	UN	Qty	Description	Page No

This page is intentionally left blank.

ECM: 70850 - 19970729
Group number: 1296878-0100
Assembly Drawing:

Pos	Part No	UN	Qty	Description	Page No
-					
080	90030-0336		2	CONN. STRAIGHT, 316L-12M-BVCO-3	
090	90091-0237		5	ROD SEAL, GLIDORING 20X27,5X3 MM	
100	315204-0215		2	O-RING 19,2X3 MM	
120	90091-0238		4	WEAR RING 20X22X10 MM	
140	315204-0308		2	O-RING 84,5X3 MM	

Pos	Part No	UN	Qty	Description	Page No

This page is intentionally left blank.

ECM: 70850 - 19970729
Group number: 1296879-0100
Assembly Drawing:

Pos	Part No	UN	Qty	Description	Page No
-					
090	90091-0237		3	ROD SEAL, GLIDORING 20X27,5X3 MM	
100	315204-0215		1	O-RING 19,2X3 MM	
120	90091-0238		2	WEAR RING 20X22X10 MM	
130	90091-0335		1	PISTON SEAL GLIDE RING 62,5X70X3 MM	
150	90091-0304		1	RADIAL SEAL 45X65X8 MM DUST LIP	

Pos	Part No	UN	Qty	Description	Page No

This page is intentionally left blank.

ECM: 72190 - 19990628
Group number: 531345-0200
Assembly Drawing:

Pos	Part No	UN	Qty	Description	Page No	Pos	Part No	UN	Qty	Description	Page No
-											
	90303-0011		1	PROTECTIVE GOGGLES							
	90303-0012		1	PROTECTIVE GLOVES							
	90303-0013		1	APRON							

This page is intentionally left blank.

ECM: 370969 - 20090101
Group number: 2574483-0200
Assembly Drawing:

Pos	Part No	UN	Qty	Description	Page No
-					
SU010	1349914-0100		1	TEMPLATE FILLING PIPE	**10-37**
SU020	2793320-0100		1	TEMPLATE	**10-39**

Pos	Part No	UN	Qty	Description	Page No

Machine Type | Group Description | Used-In | Group Number | Page No

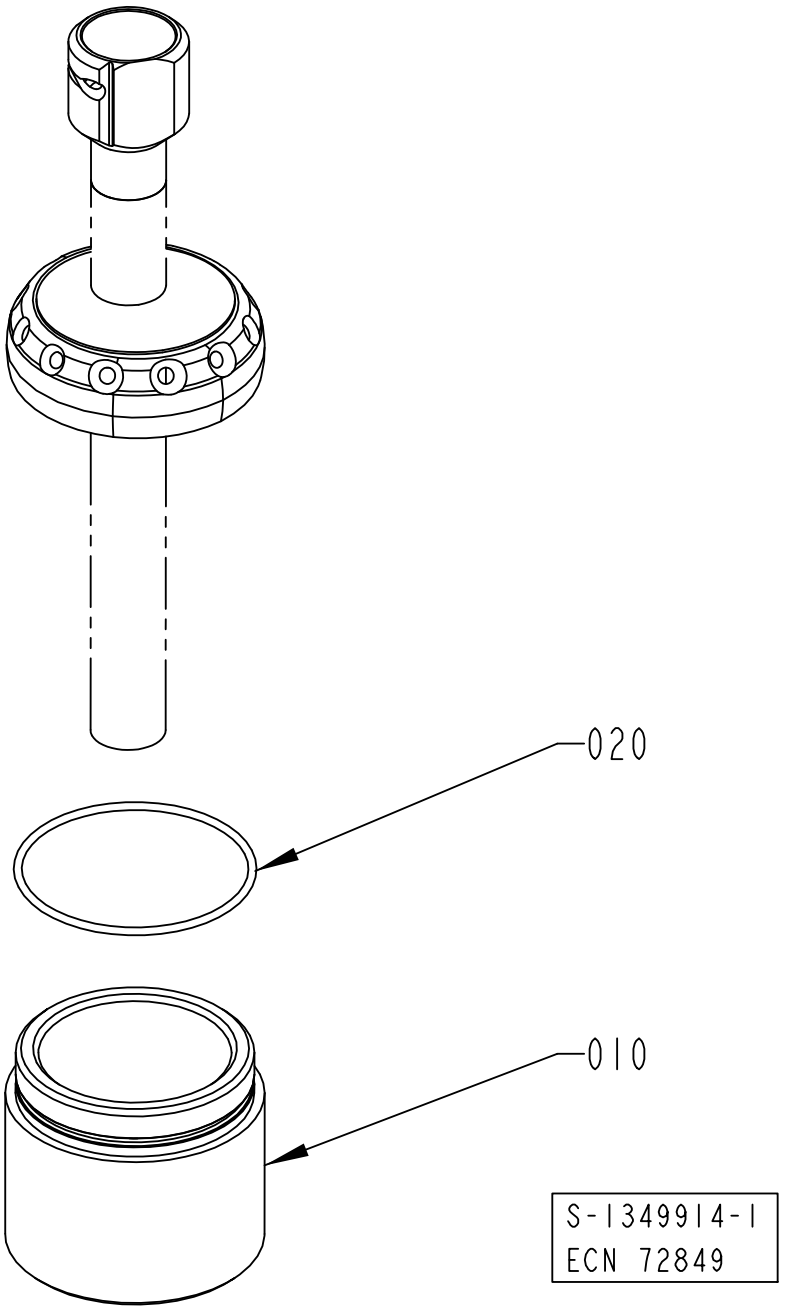
020
010
S-1349914-1
ECN 72849

ECM: 363455 - 20080825
Group number: 1349914-0100
Assembly Drawing: 1349914-1_1_AA

Pos	Part No	UN	Qty	Description	Page No
TPA 500SQ NOMOLDEDCAP					
010	2545352-0000		1	TEMPLATE	
020	315202-0302		1	O-RING 54,5X3 MM	
TBA 0200B, TBA 0250B, TBA 0330S					
010	1498149-0000		1	TEMPLATE	
020	315202-0217		1	O-RING 24,2X3 MM	
TBA 0200M, TBA 0200S, TBA 0250S, TPA 0250SQ, TPA 0200SQ					
010	1558304-0000		1	TEMPLATE	
020	315202-0214		1	O-RING 17,3X2,4 MM	
TBA 0200SQ, TBA 0250SQ					
010	2799729-0000		1	TEMPLATE	
020	315202-0217		1	O-RING 24,2X3 MM	
TBA 0500B QC, TBA 1000B QC					
010	2774372-0000		1	TEMPLATE	
020	315202-0233		1	O-RING 79,2X5,7 MM	
TBA 0500S					
010	1524840-0000		1	TEMPLATE	
020	315202-0303		1	O-RING 59,5X3 MM	
TBA 0500SQ, TBA 1000SQ					
010	1517987-0000		1	TEMPLATE	
020	315202-0305		1	O-RING 69,5X3 MM	
TBA 1000B STDA7					
010	2774374-0000		1	TEMPLATE	
020	315202-0308		1	O-RING 84,5X3 MM	
TBA 1000S NOMOLDEDCAP					
010	1498151-0000		1	TEMPLATE	
020	315202-0307		1	O-RING 79,5X3 MM	
TBA 1000S STDA7, TBA 1000S LIGHTCAP					
010	2774373-0000		1	TEMPLATE	
020	315202-0307		1	O-RING 79,5X3 MM	
TBA 1500S, TBA 1000B NOQC NOMOLDEDCAP					
010	1498150-0000		1	TEMPLATE	
020	315202-0308		1	O-RING 84,5X3 MM	
TBA 1890S, TBA 2000S, TBA 1400B					
010	2660843-0000		1	TEMPLATE	
020	315202-0310		1	O-RING 94,5X3 MM	
TGA 1000SQ, TGA 0750SQ, TGA 0500SQ					
010	2878187-0000		1	TEMPLATE	
020	315202-0304		1	O-RING 64,5X3 MM	
030	2818313-0000		1	TEMPLATE	
TPA 0330SQ					
010	1532299-0000		1	TEMPLATE	
020	315202-0217		1	O-RING 24,2X3 MM	
TPA 1000SQ, TPA 0750SQ					
010	1524841-0000		1	TEMPLATE	
020	315202-0303		1	O-RING 59,5X3 MM	
TPA 500SQ LIGHTCAP					
010	2986076-0000		1	TEMPLATE	
020	315202-0302		1	O-RING 54,5X3 MM	

Machine Type | Group Description | Used-In | Group Number | Page No

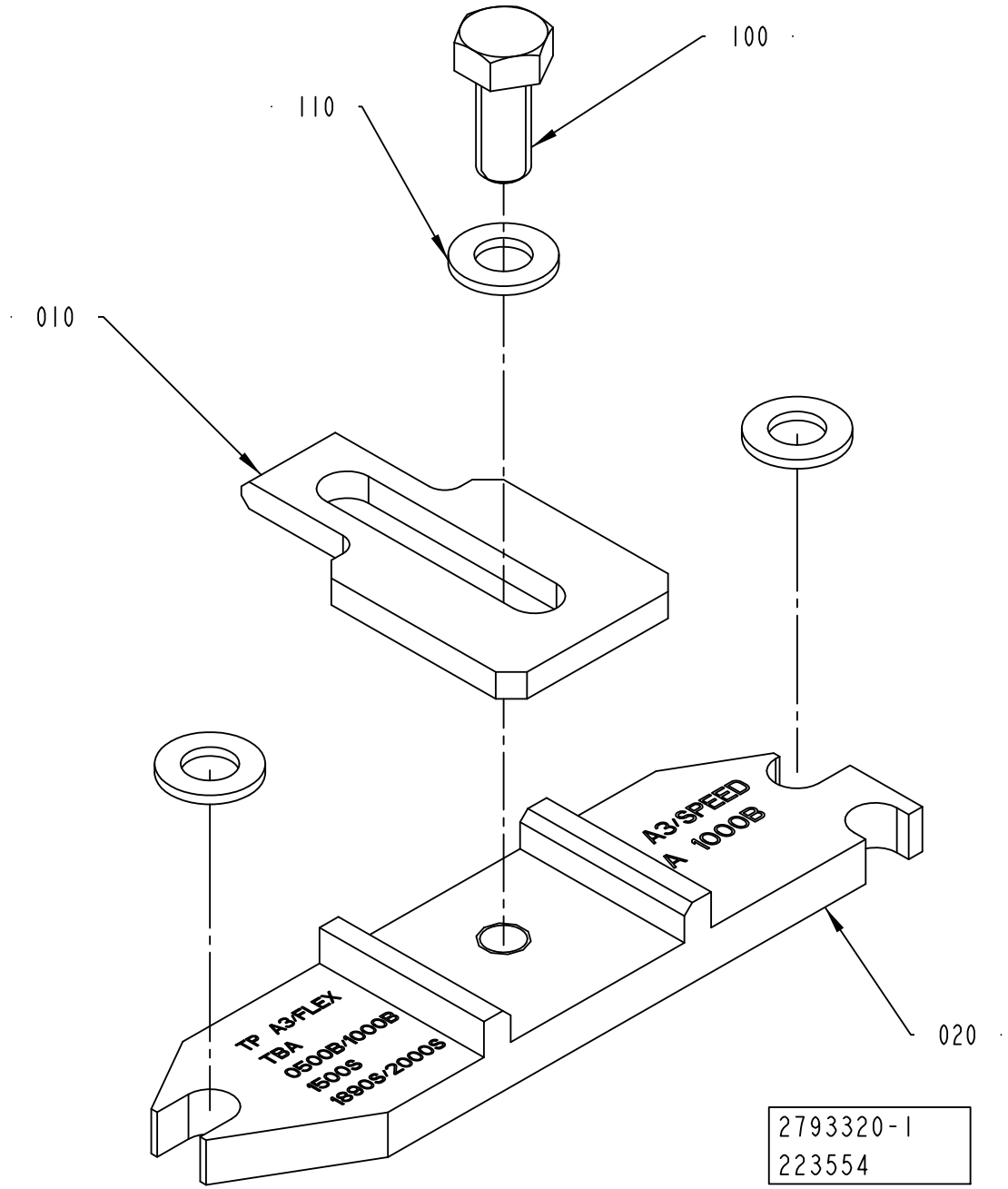
100
110
010
020
A3/SPEED
A 1000B
TP A3/FLEX
TBA
0500B/1000B
1500S
1890S/2000S
2793320-1
223554

ECM: 313942 - 20070702
Group number: 2793320-0100
Assembly Drawing: 2793320-1_1_AA

Pos	Part No	UN	Qty	Description	Page No
TBA 0200B, TBA 0250B, TBA 0330S					
020	2793328-0000		1	PLATE	
TBA 0200M, TBA 0200S, TBA 0250S					
020	2793325-0000		1	PLATE	
TBA 0200SQ, TBA 0250SQ					
020	2793331-0000		1	PLATE	
TBA 0500B, TBA 1000B, TBA 1500S, TBA 1890S, TBA 2000S, TBA 1400B					
020	2793321-0000		1	PLATE	
TBA 0500S					
020	2793326-0000		1	PLATE	
TBA 0500SQ, TBA 1000SQ					
020	2793319-0000		1	PLATE	
TBA 1000S					
020	2793322-0000		1	PLATE	
TPA 0250SQ, TPA 0200SQ					
020	2793327-0000		1	PLATE	
TPA 0330SQ					
020	2793324-0000		1	PLATE	
TPA 0500SQ					
020	2793323-0000		1	PLATE	
TPA 1000SQ, TPA 0750SQ, TPA 1000SQ NOQC, TGA 1000SQ, TGA 0750SQ, TGA 0500SQ					
020	2793329-0000		1	PLATE	
Common Parts					
010	2736719-0000		1	PLATE	
100	312105-0327		1	SCREW M6S ISO 4017 M5X12 A480	
110	315105-0146		3	WASHER BRB 5,3X10 RFR	

Pos	Part No	UN	Qty	Description	Page No

Machine Type | Group Description | Used-In | Group Number | Page No

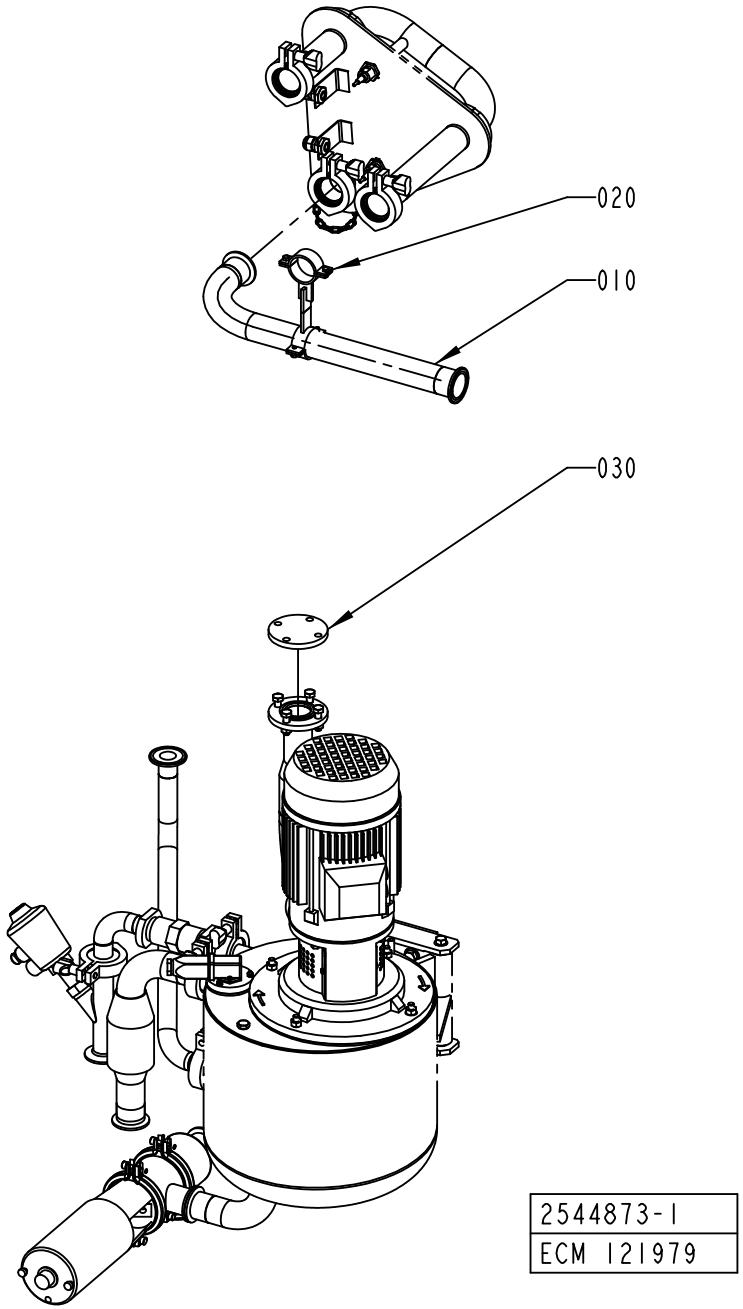
020
010
030
2544873-1
ECM 121979

ECM: 121994 - 20030403
Group number: 2544873-0100
Assembly Drawing: 2544873-1_1_AA

Pos	Part No	UN	Qty	Description	Page No
-					
010	2500089-0000		1	PIPE	
020	2539459-0000		1	HOLDER	
030	2539457-0000		1	LID	

Pos	Part No	UN	Qty	Description	Page No

This page is intentionally left blank.

ECM: 321306 - 20070903
Group number: 90600-3339
Assembly Drawing:

Pos	Part No	UN	Qty	Description	Page No
-					
	1558477-0100		1	WHEEL	**10-45**
	1558479-0100		1	HANDLE	**10-47**
	1558480-0100		1	LIFTING CYLINDER	**10-49**
	312812-0324		1	HEXAGON NUT, NY-LOCK M16 A480	
	312105-0634		1	SCREW M6S ISO 4014 M16X70 A480	
	312101-0678		2	SCREW M6S M20X70 FZB	
	90458-1473		1	PUMP, 34 73 521 7	**10-51**
	90067-0372		2	SHAFT, 32 04 174 1	
	90067-0371		4	SLEEVE, 32 04 175 8	
	90067-0370		2	WHEEL, 32 04 176 6	
	90067-0368		1	YOKE	
	90067-0365		1	HYDRAULIC HOSE, 32 04 169 1	

Pos	Part No	UN	Qty	Description	Page No

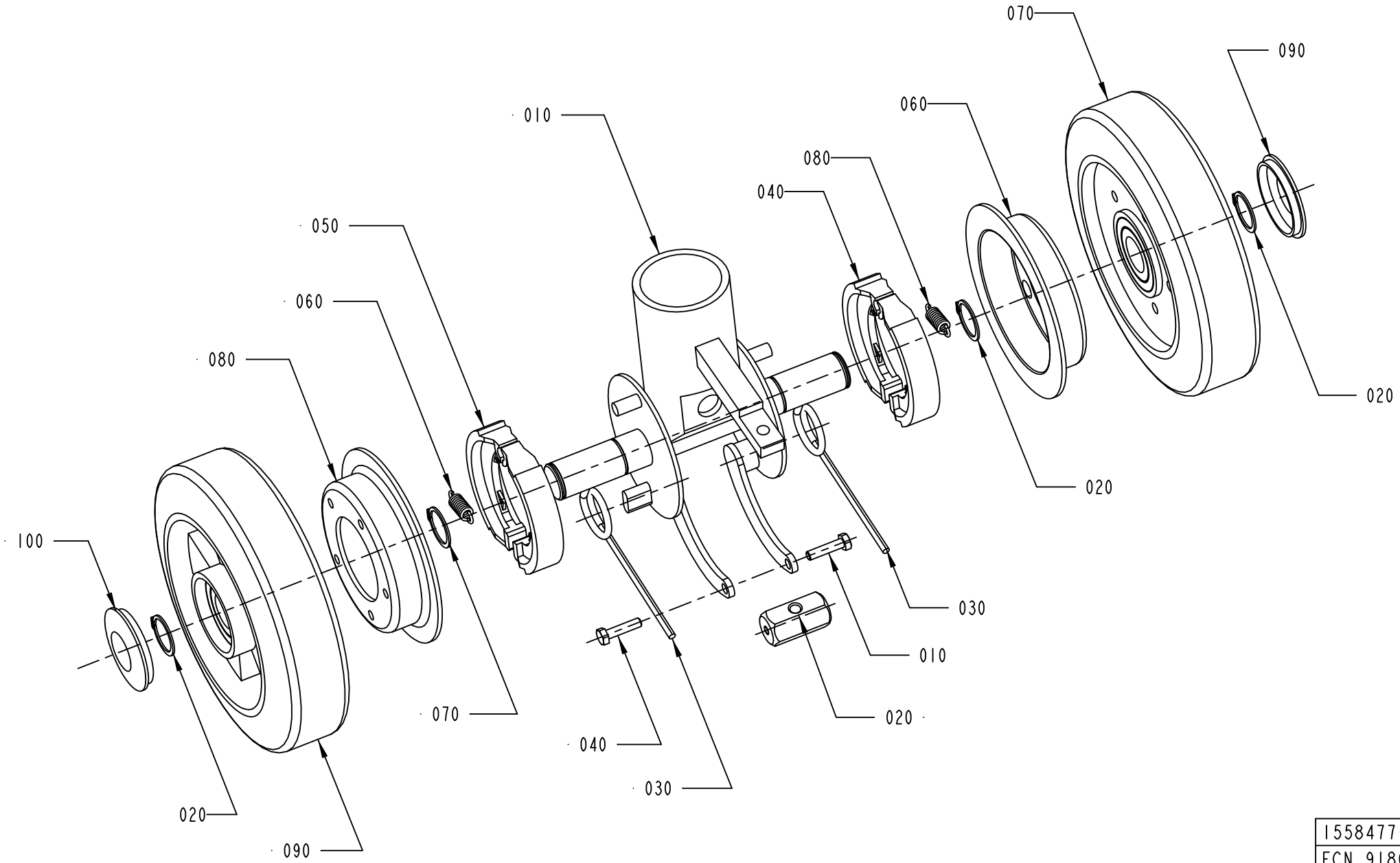

1558477-1
ECN 91803

ECM: 91832 - 20010504
Group number: 1558477-0100
Assembly Drawing: 1558477-1_1_AA

Pos	Part No	UN	Qty	Description	Page No
-					
010	90067-0336		1	GUIDE SHAFT UNIT, 32 82 123 3	
030	90067-0302		2	TORSION SPRING	
040	312105-0372		2	SCREW M6S ISO 4017 M6X25 A480	
050	90067-0317		2	BRAKE LINING	
060	90067-0342		2	TENSION SPRING	
070	315750-0119		4	RETAINING RING SHAFT DIN 471 ST 25	
080	90067-0337		2	BRAKE DRUM	
090	90067-0338		2	GUIDE ROLLER 32 44 117 2	
100	90458-1467		2	CAP, 32 44 129 7	

Pos	Part No	UN	Qty	Description	Page No

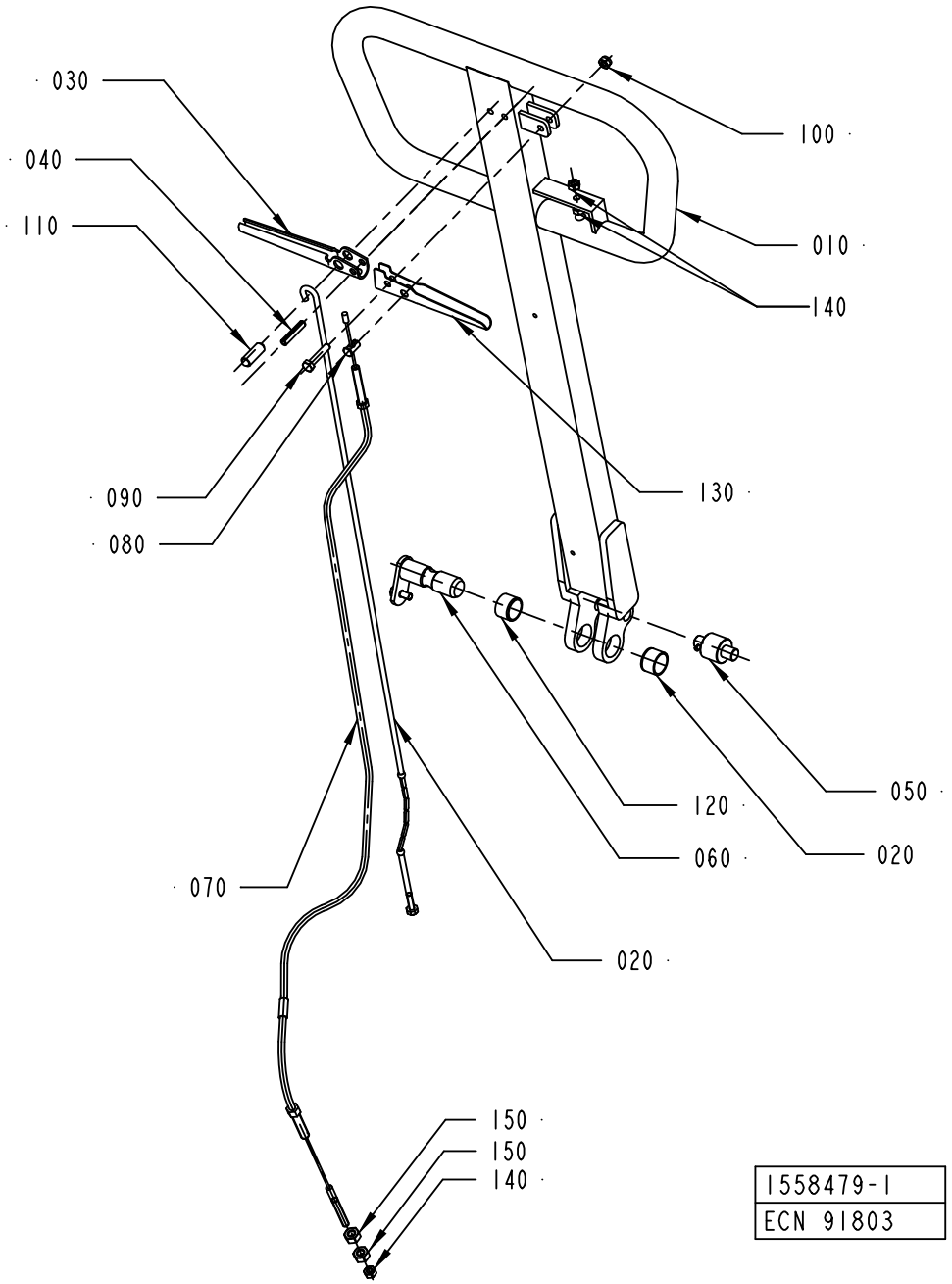
030
040
110
100
010
140
090
080
130
120
060
050
020
070
020
150
150
140
1558479-1
ECN 91803

ECM: 91830 - 20010504
Group number: 1558479-0100
Assembly Drawing: 1558479-1_1_AA

Pos	Part No	UN	Qty	Description	Page No
-					
010	90067-0361		1	TIE ROD	
020	90067-0359		1	SINK ROD, 34 74 021 7	
030	90067-0358		1	SINK HANDLE	
040	311111-0345		1	SPRING PIN ISO 8752 6X32-ST	
050	90067-0349		1	ROLLER KIT, 34 73 050 7	
060	90067-0350		1	AXLE PIN	
070	90067-0301		1	BRAKE WIRE, 32 82 138 1	
080	90067-0320		1	COTTER FOR 90067-301	
090	312109-0374		1	SCREW M6S ISO 4017 M6X30 A480	
100	312812-0316		1	HEXAGON NUT, NY-LOCK M6 A480	
110	90067-0360		1	MOUNTING KIT, 34 74 022 5	
120	321120-0137		2	BEARING BUSH W/O FLANGE, 20X23X15 MM	
130	90067-0364		1	BRAKE HANDLE	
140	312602-0316		3	NUT, EN 24032 M6M M6 NIPLBR	
150	312602-0318		2	HEXAGON NUT, EN 24032 M6M M8 NIPLBR	

Pos	Part No	UN	Qty	Description	Page No

LIFTING CYLINDER

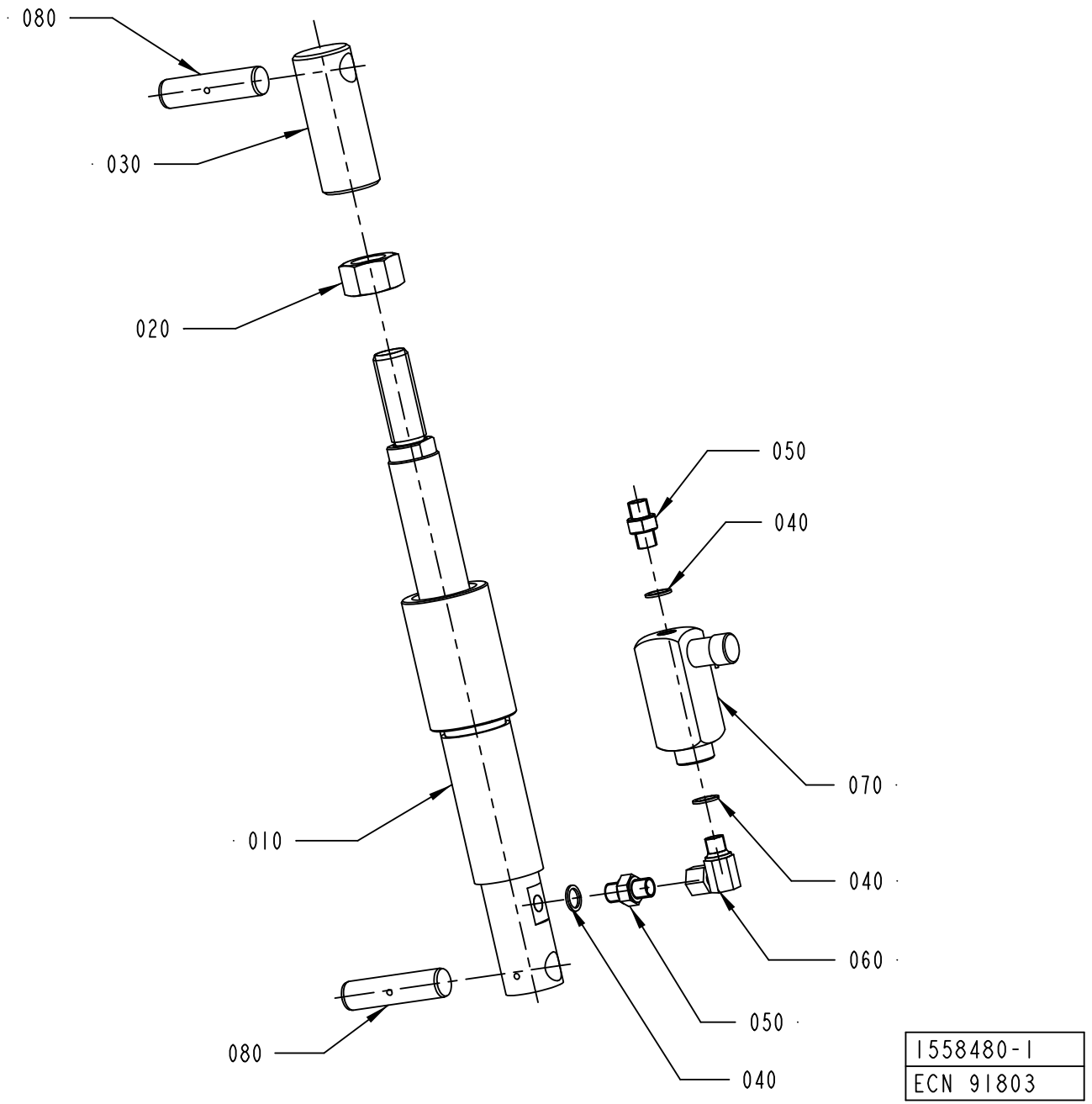

ECM: 289823 - 20070126
Group number: 1558480-0100
Assembly Drawing: 1558480-1_1_AA

Pos	Part No	UN	Qty	Description	Page No
-					
010	90458-1472		1	CYLINDER, 32 04 215 2	
020	312605-0328		1	HEXAGON NUT, M6M M24 A280	
030	90458-1471		1	PISTON ROD END, 32 04 214 5	
040	315234-0110		3	WASHER,PL.RND.CU.13,5/18 H=1,5	
050	90055-0042		2	NIPPLES, EXT. THREAD, HEXAGON, NO. 6835-	
060	90055-0145		1	ELBOW ADAPTOR-R1/4	
070	90201-0098		1	ADJ. FLOW CON. VALVE, NO. 9 PCCM 400SF	
080	90458-1476		2	AXLE PIN, 32 04 167 5	

Pos	Part No	UN	Qty	Description	Page No

PUMP, 34 73 521 7

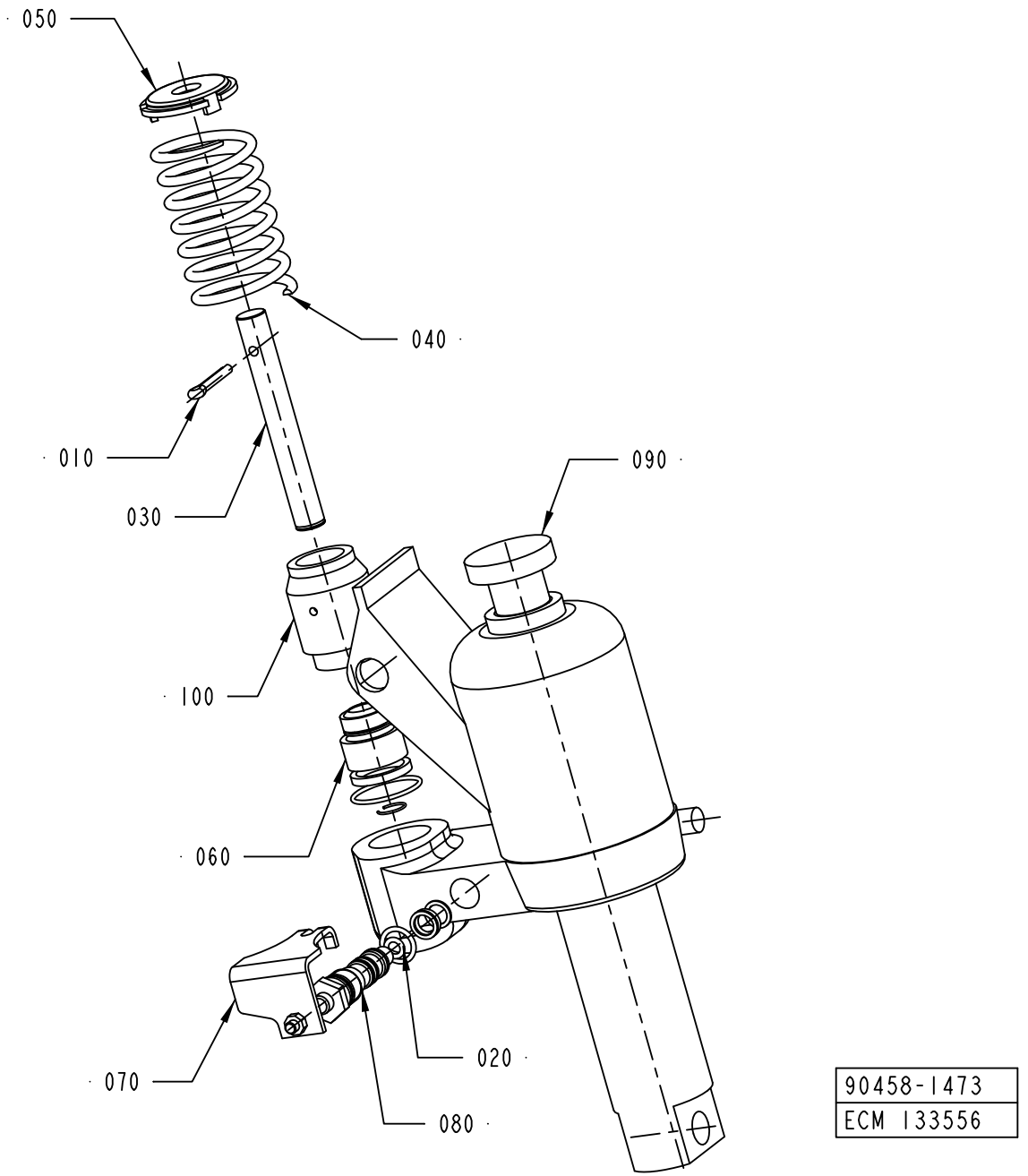

90458-1473
ECM 133556

ECM: 324175 - 20070903
Group number: 90458-1473
Assembly Drawing: 90458-1473_1_AB

Pos	Part No	UN	Qty	Description	Page No
-					
010	90458-1468		1	SPLIT PIN, 43 71 234 8	
020	90067-0351		1	SEAL KIT	
030	90067-0354		1	PUMP PISTON	
040	90067-0355		1	COMPRESSION SPRING	
050	90067-0356		1	TOP WASHER	
060	90067-0357		1	REPAIR KIT	
070	90067-0369		1	VALVE ARM	
080	90458-1470		1	SINK VALVE COMPL, 34 73 094 5	
100	90458-1393		1	PUMP CYLINDER, 34 73 522 5	

Pos	Part No	UN	Qty	Description	Page No

This page is intentionally left blank.

ECM: 323831 - 20080101
Group number: 2764527-0100
Assembly Drawing:

Pos	Part No	UN	Qty	Description	Page No
A3/FLEX TBA 0250SQ QC, A3/FLEX TBA 0200SQ QC					
080	1512316-0000		1	ARM LEFT	
080	1512315-0000		1	ARM RIGHT	
200	1036617-0000		2	BRACKET	

Pos	Part No	UN	Qty	Description	Page No

Tetra Pak

SPC
Spare Parts Catalogue

This page is intentionally left blank.

ECM: 335159 - 20071207
Group number: 648564-0100
Assembly Drawing:

Pos	Part No	UN	Qty	Description	Page No
-					
010	2556260-0200		1	TOOLS AND TEMPLATES	**11-5**
020	2556261-0100		1	ACCESSORIES	**11-67**
030	2812327-0100		1	CONTROL PANEL	**11-81**
040	2945499-0100		1	OPTIONAL ACCESSORIES SPEC FOR TP NIHON	

Pos	Part No	UN	Qty	Description	Page No

Machine Type | Group Description | Used-In | Group Number | Page No

This page is intentionally left blank.

ECM: 254657 - 20060303
Group number: 2556260-0200
Assembly Drawing:

Pos	Part No	UN	Qty	Description	Page No
TBA 0200M, TBA 0200B, TBA 0200S, TBA 0250S, TBA 0250B, TBA 0330S, TPA 0330SQ					
SU070	2552154-0000		1	BRACKET	
TBA 0500B					
SU070	2552151-0000		1	BRACKET	
TBA 1000B					
DC020	2641204-0000		1	TEMPLATE	
SU070	2552151-0000		1	BRACKET	
TBA 1000S					
DC010	2641203-0000		1	TEMPLATE	
SU070	2552152-0000		1	BRACKET	
TBA 1000SQ					
SU070	2552153-0000		1	BRACKET	
TBA 1500S					
SU070	2552152-0000		1	BRACKET	
TBA 1890S, TBA 2000S					
SU090	90459-7315		1	PUSH DYNAMOMETER 20 - 200N, DT120	
TPA 0500SQ					
SU070	2685310-0000		1	BRACKET	
TPA 1000SQ, TPA 0750SQ					
SU070	2582613-0000		1	BRACKET	
SU090	90459-7315		1	PUSH DYNAMOMETER 20 - 200N, DT120	
Common Parts					
	90459-6473		1	HARDDISK COPYING TOOL, 03607-000	
AS010	2564232-0100		1	LEG	**8-51, 8-53, 11-7, 11-9**
DC030	2642146-0000		1	TEMPLATE	
DC040	2503720-0100		1	OPENING FORCE TESTER	**11-11**
DS010	90459-2181		1	BELT TENSION METER, TSM 4	
DS020	2646428-0100		1	LIFTING UNIT	**11-19, 11-21**
EC010	90243-0203		1	MEASURING INSTRUMENT- ZONOSCOPE	
EC020	2559112-0100		1	CALIBRATION EQUIPMENT	**11-23**
FF010	1478583-0100		1	PRESSURE GAUGE	**11-25**
FF020	1350497-0000		1	ASSEMBLY TOOL	
FF030	1350498-0000		1	ASSEMBLY TOOL	
JS010	2725981-0100		1	SETTING TOOL	**11-27**
JS020	1035362-0100		1	MEASURING DEVICE	**11-35**
JS030	72846-0101		1	COMPRESSION SPRING	**11-37**
JS040	90243-0146		1	TOOL	
JS050	90206-0330		1	SOCKET WRENCH 2"9	
JS060	1095884-0100		1	ASSEMBLY TOOL	**11-39**
JS070	2637599-0100		1	ALIGNMENT TOOL	**11-41**
JS080	2637602-0100		1	DRILLING JIG	**11-43**
MB030	90459-1037		1	CRIMP TOOL FOR COAX. CONN. HTG 58-901200	
MB040	2588426-0100		1	ALIGNMENT TEMPLATE	**11-45**
PT010	2564074-0100		1	TOOLS AND TEMPLATES	**11-47**
PT020	90459-5181		1	GREASE LUBRICATION KIT , 400999139	
PT030	2764526-0000		1	TOOL	
	312105-0291		*2*	*SCREW M6S ISO 4017 M4X12 A470*	
SU010	1349738-0100		1	PRESSURE TEST EQUIPMENT	**11-51**
SU010	90243-0447		1	LASER EQUIPMENT	
	90243-0450		*1*	*RIDGE BED*	
	90243-0449		*1*	*ANGLE PLATE*	
	90243-0448		*1*	*ANGLE PLATE*	
	90243-0330		*1*	*CABLE*	
	90243-0329		*1*	*CABLE*	
	90243-0328		*1*	*PAPER ROLL*	
SU020	74305-0100		1	PULLER	**11-53**
SU030	777200-0101		1	PIPE WRENCH	
SU040	449969-0100		1	TOOL DISMOUNTING	**11-55**
SU050	533014-0100		1	LEAK FINDING EQUIPMENT (SUPERSTRUCTURE)	**11-57, 11-59**
SU060	90459-1467		1	FORCE GAUGE 0-250N, AFG 250N	
SU080	2532974-0000		1	SETTING TOOL	
SU120	2569982-0100		1	SETTING TOOL	**11-63**
SU130	90243-0328		1	PAPER ROLL	
SU140	90243-0329		1	CABLE	
SU150	90243-0330		1	CABLE	
SU160	2579687-0100		1	SETTING TOOL	**11-65**

Machine Type | Group Description | Used-In | Group Number | Page No

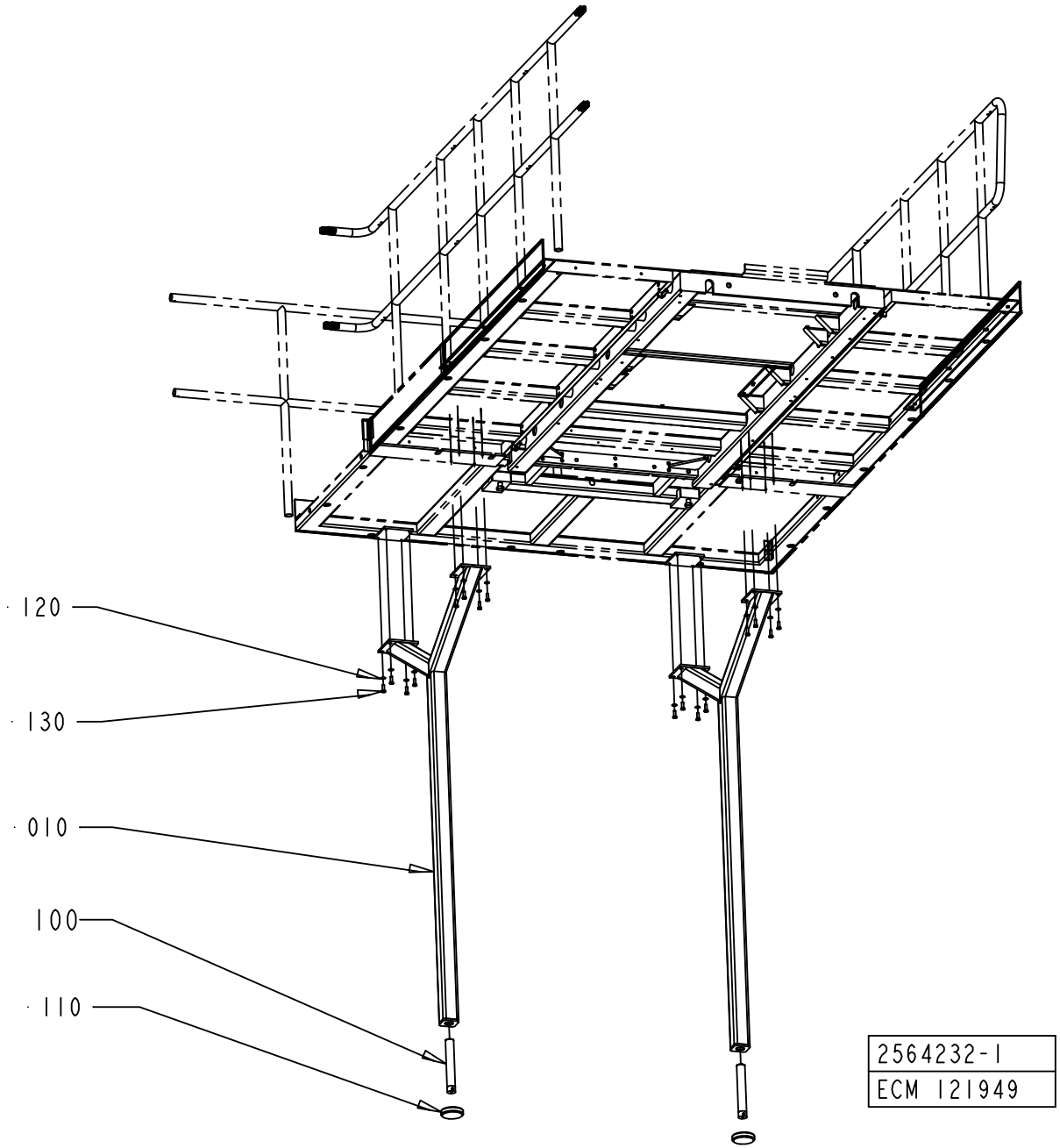
120
130
010
100
110
2564232-1
ECM 121949

ECM: 274029 - 20061102
Group number: 2564232-0100
Assembly Drawing: 2564232-1_1_AA

This list covers pages from 11-6 to 11-9

Pos	Part No	UN	Qty	Description	Page No
-					
010	2837177-0000		2	LEG	
10	2553117-0000		2	LEG	
100	90347-0080		2	DAMPER, TFE 1201	
110	905373-0000		2	SCREW - LEG	
120	315105-0173		16	WASHER BRB 10,5X22 RFR	
130	312105-0495		16	SCREW M6S ISO 4017 M10X30 A480	

Pos	Part No	UN	Qty	Description	Page No

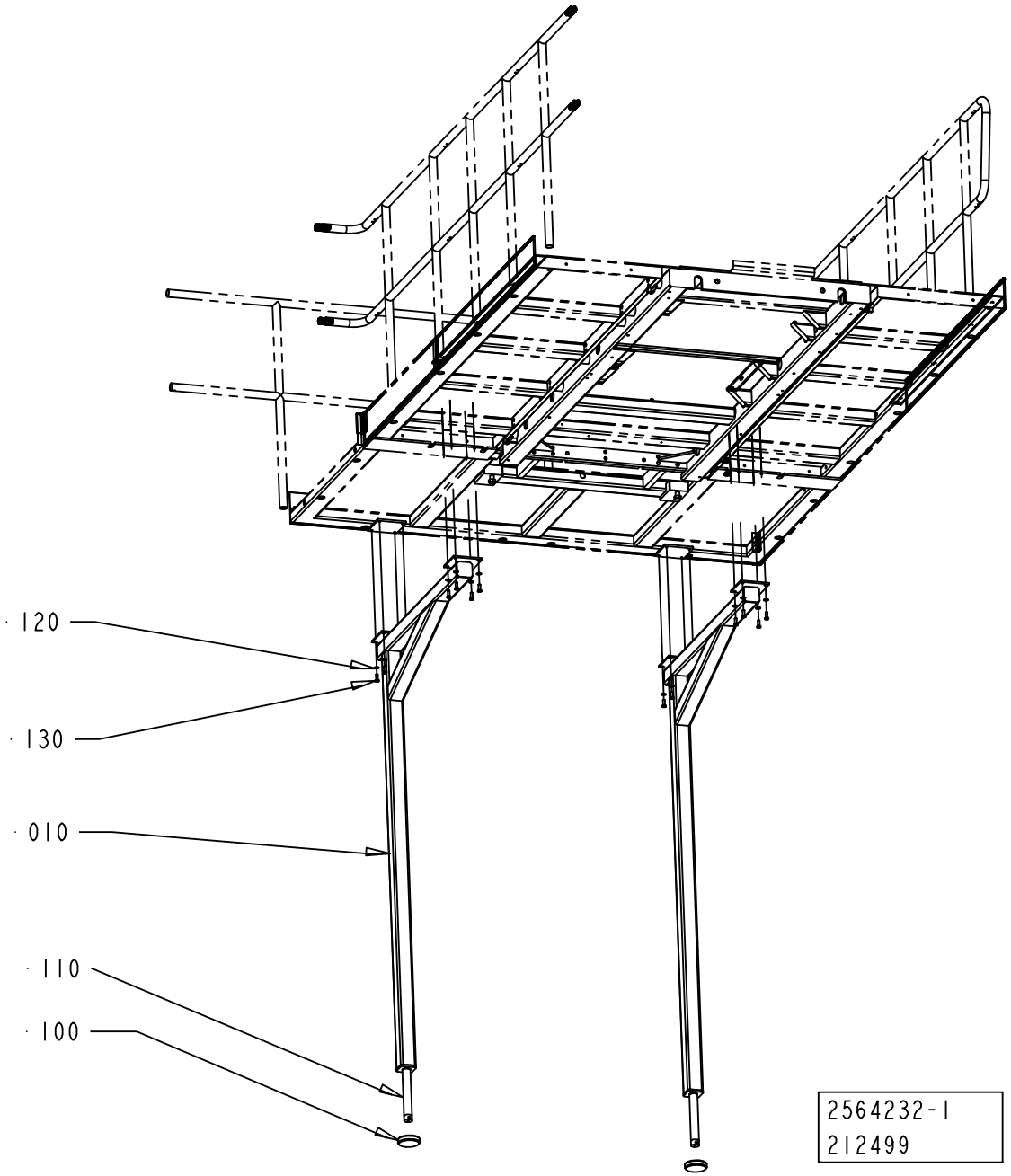
120
130
010
110
100
2564232-1
212499

ECM: 274029 - 20061102
Group number: 2564232-0100
Assembly Drawing: 2564232-1_1_AB

This list covers pages from 11-6 to 11-9

Pos	Part No	UN	Qty	Description	Page No
-					
010	2837177-0000		2	LEG	
10	2553117-0000		2	LEG	
100	90347-0080		2	DAMPER, TFE 1201	
110	905373-0000		2	SCREW - LEG	
120	315105-0173		16	WASHER BRB 10,5X22 RFR	
130	312105-0495		16	SCREW M6S ISO 4017 M10X30 A480	

Pos	Part No	UN	Qty	Description	Page No

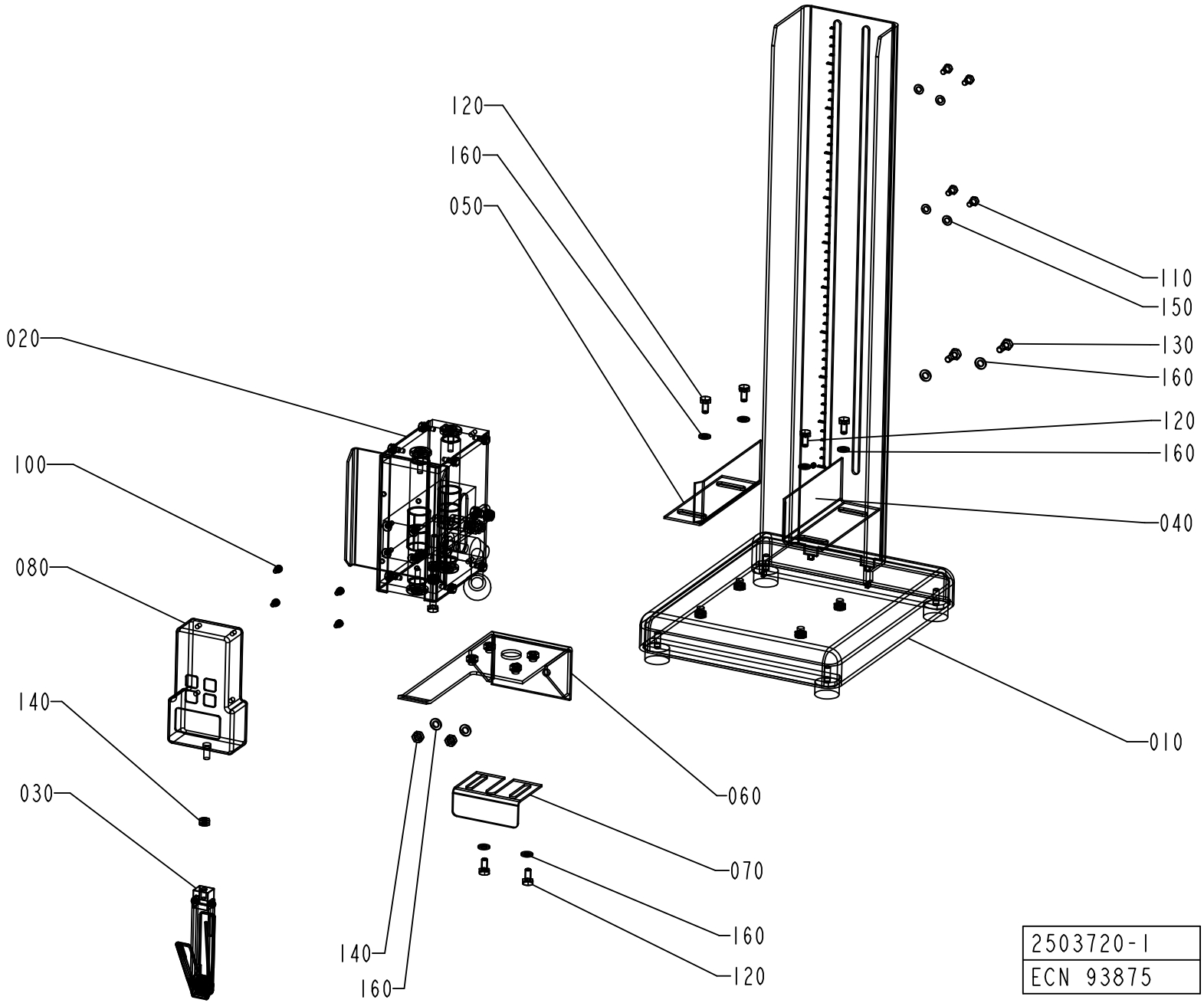
120
160
050
110
150
130
160
120
160
040
020
100
080
140
030
060
070
160
120
140
160
010
2503720-1
ECN 93875

ECM: 94503 - 20010621
Group number: 2503720-0100
Assembly Drawing: 2503720-1_1_AA

Pos	Part No	UN	Qty	Description	Page No
-					
010	2503735-0100		1	FRAME	**11-13**
020	2503722-0100		1	HOLDER	**11-15**
030	2503721-0100		1	GRIPPING DEVICE	**11-17**
040	1338402-0000		1	GUIDE	
050	1338403-0000		1	GUIDE	
060	1338404-0000		1	BRACKET	
070	1338405-0000		1	BRACKET	
080	90243-0456		1	FORCE GAUGE +-50N, FMI-200B5	
100	312155-0285		4	SCREW DIN 7991 MF6S M4X6 A4 70	
110	312105-0325		4	SCREW M6S ISO 4017 M5X10 A480	
120	312105-0366		6	SCREW M6S ISO 4017 M6X12 A480	
130	312105-0368		2	SCREW M6S ISO 4017 M6X16 A480	
140	312605-0316		3	HEXAGON NUT, M6M M6 A280	
150	315105-0146		4	WASHER BRB 5,3X10 RFR	
160	315105-0153		10	WASHER BRB 6,4X12 RFR	

Pos	Part No	UN	Qty	Description	Page No

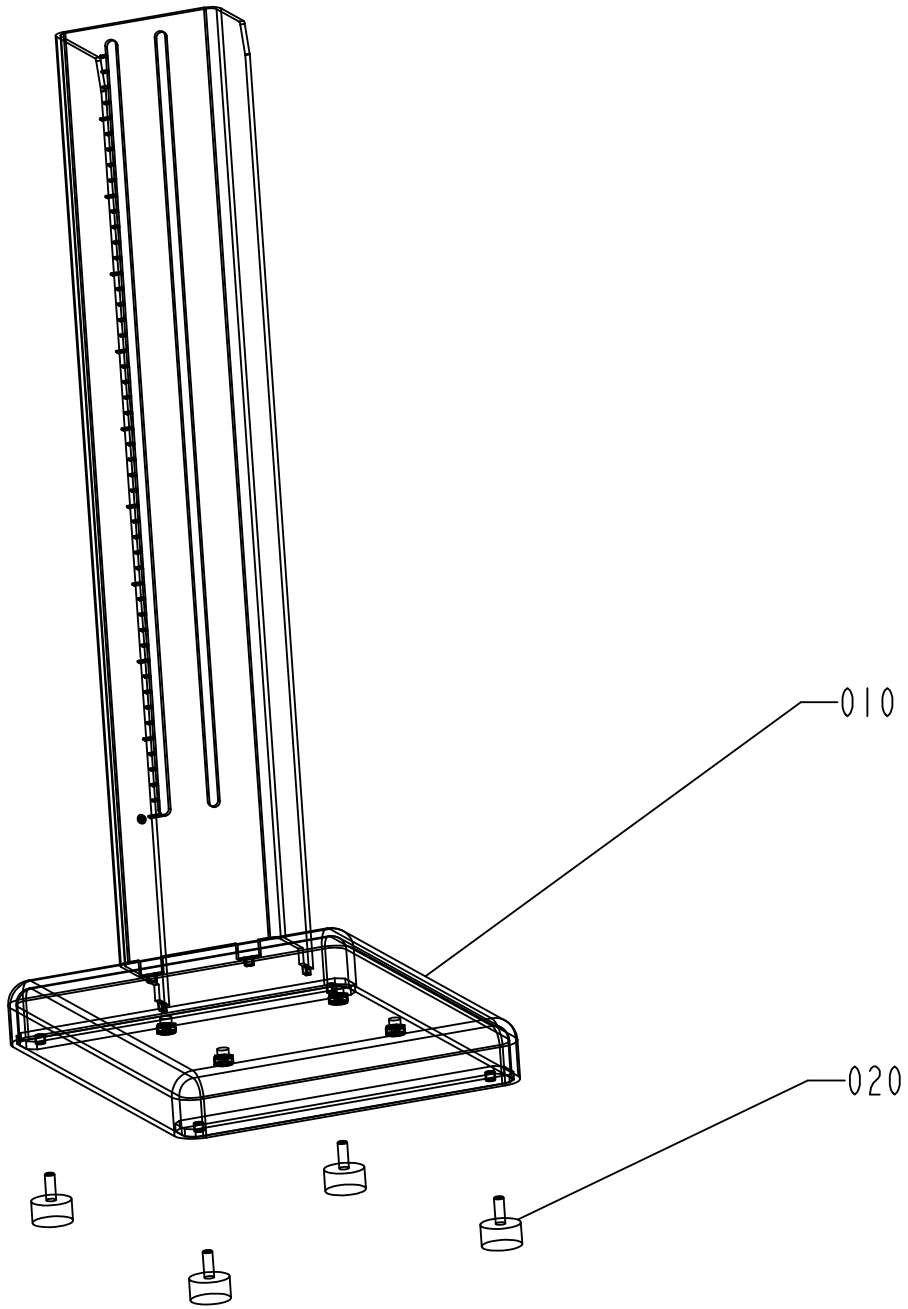

2503735-1
ECN 93875

ECM: 94506 - 20010621
Group number: 2503735-0100
Assembly Drawing: 2503735-1_1_AA

Pos	Part No	UN	Qty	Description	Page No
-					
010	2503719-0000		1	FRAME	
020	90347-0034		4	VIBRATION DAMPER	

Pos	Part No	UN	Qty	Description	Page No

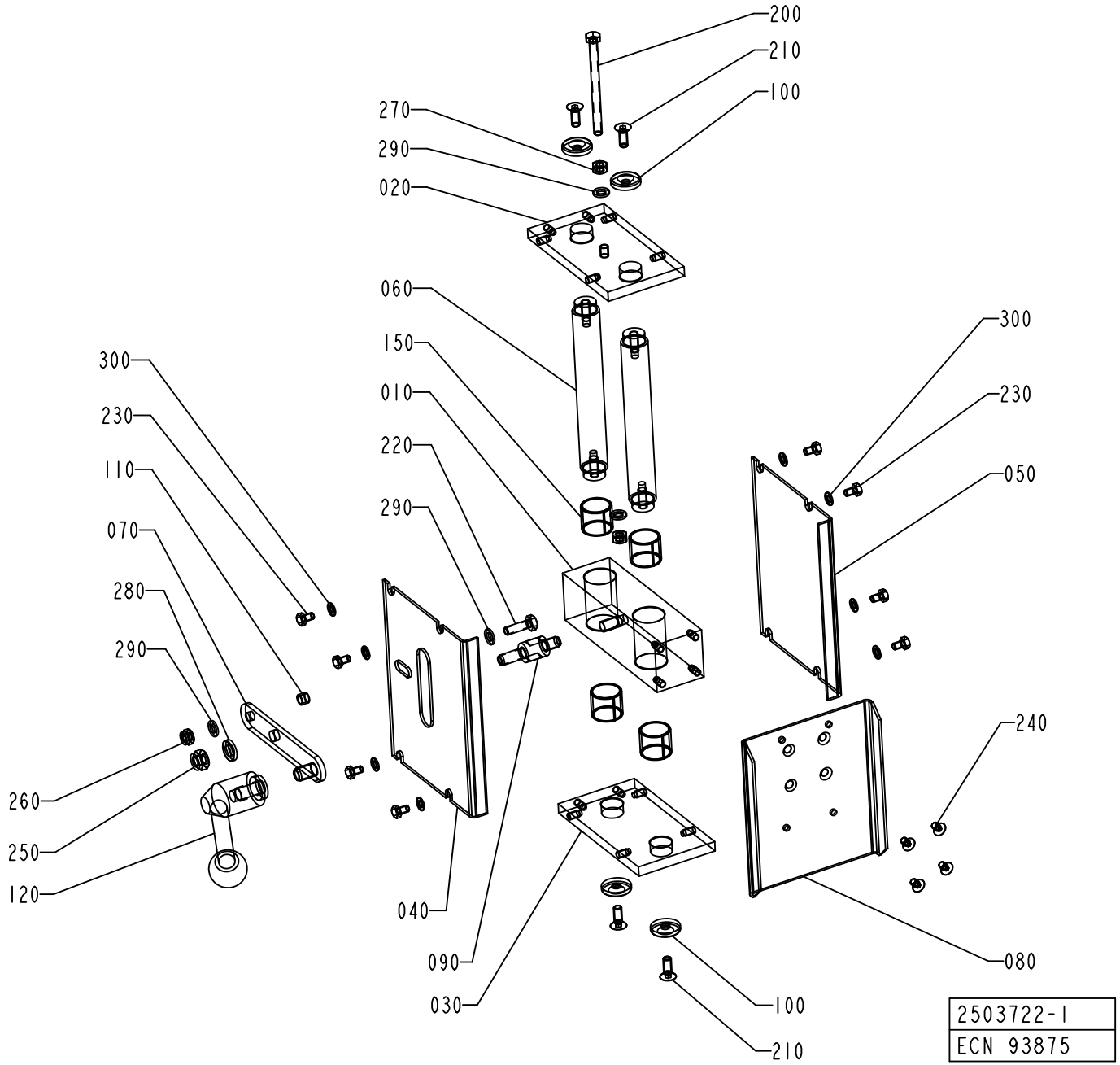
200
210
100
270
290
020
060
150
010
220
290
300
230
110
070
280
290
260
250
120
040
090
030
300
230
050
240
080
100
210
2503722-1
ECN 93875

ECM: 94505 - 20010621
Group number: 2503722-0100
Assembly Drawing: 2503722-1_1_AA

Pos	Part No	UN	Qty	Description	Page No
-					
010	2503723-0000		1	BLOCK	
020	2503725-0000		1	END PLATE	
030	2503724-0000		1	END PLATE	
040	2503727-0000		1	PLATE	
050	2503726-0000		1	PLATE	
060	2503732-0000		2	SHAFT	
070	2503728-0000		1	ARM	
080	2503729-0000		1	MOUNTING PLATE	
090	2503730-0000		1	SPACER	
100	2503734-0000		4	WASHER	
110	2503731-0000		1	SLEEVE	
120	2503733-0000		1	HANDLE	
150	321141-0260		4	BEARING BUSH W/O FLANGE, 20X23X20 MM	
200	312109-0386		1	SCREW M6S ISO 4017 M6X80 A480	
210	312155-0368		4	SCREW DIN 7991 MF6S M6X16 A4 70	
220	312105-0370		1	SCREW M6S ISO 4017 M6X20 A480	
230	312105-0323		8	SCREW M6S ISO 4017 M5X8 A480	
240	312155-0323		4	SCREW DIN 7991 MF6S M5X8 A4 70	
250	312812-0318		1	HEXAGON NUT, NY-LOCK M8 A480	
260	312812-0316		1	HEXAGON NUT, NY-LOCK M6 A480	
270	312605-0316		2	HEXAGON NUT, M6M M6 A280	
280	315115-0165		1	WASHER PLAIN, TBRB 8,4/16 H=3	
290	315105-0153		4	WASHER BRB 6,4X12 RFR	
300	315105-0146		8	WASHER BRB 5,3X10 RFR	

Pos	Part No	UN	Qty	Description	Page No

Machine Type | Group Description | Used-In | Group Number | Page No

GRIPPING DEVICE

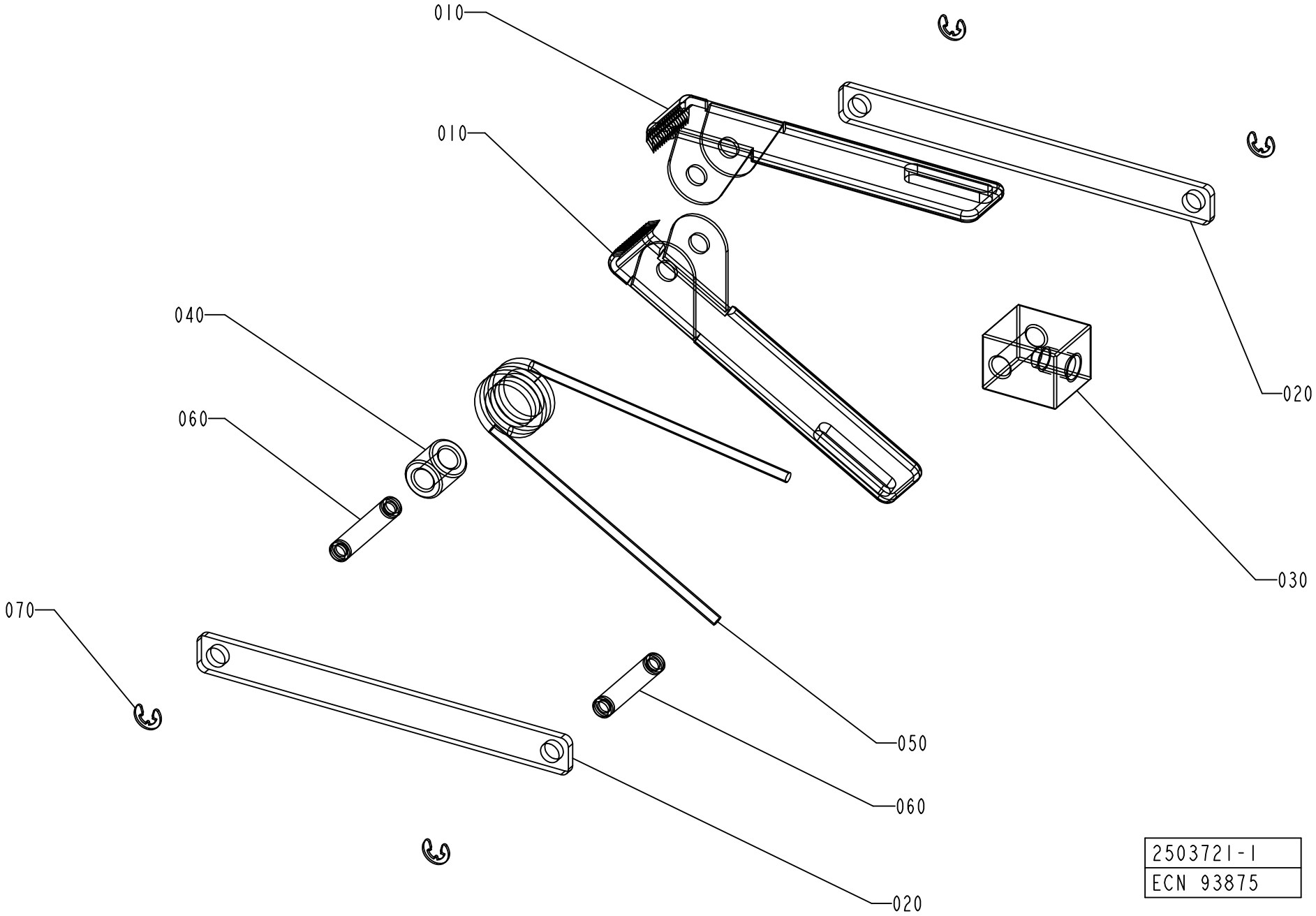

ECM: 94504 - 20010621
Group number: 2503721-0100
Assembly Drawing: 2503721-1_1_AA

Pos	Part No	UN	Qty	Description	Page No
-					
010	1528838-0000		2	CLAMP	
020	1528840-0000		2	LEVER	
030	1528841-0000		1	HOLDER	
040	1528839-0000		1	SLEEVE	
050	1528887-0000		1	TORSION SPRING	
060	1528842-0000		2	PIN	
070	315755-0105		4	RETAINING RING SHAFT DIN 6799 3,2 A2	

Pos	Part No	UN	Qty	Description	Page No

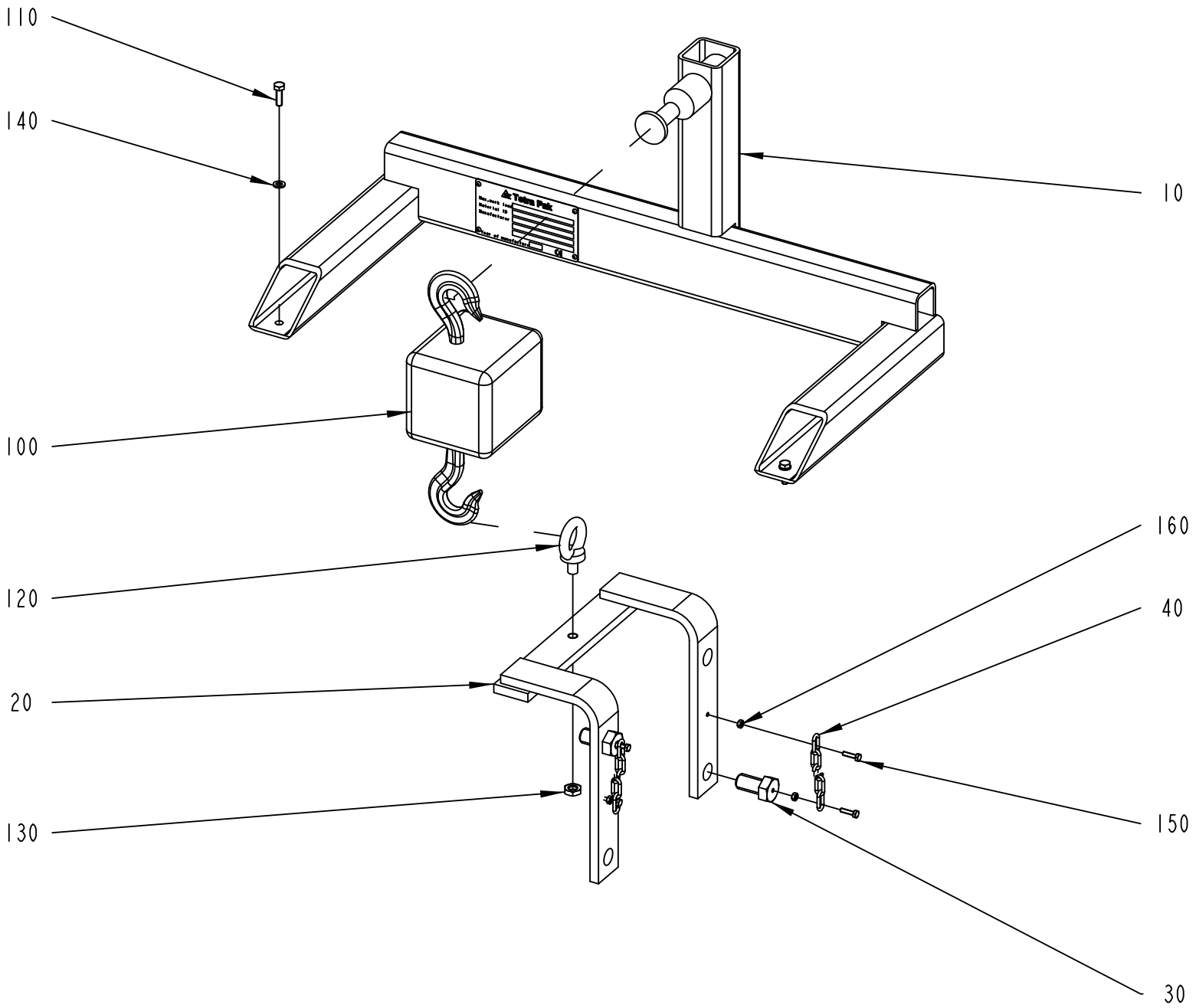

2646428-1
ECM 152887

ECM: 153155 - 20040511
Group number: 2646428-0100
Assembly Drawing: 2646428-1_1_AA

This list covers pages from 11-18 to 11-21

Pos	Part No	UN	Qty	Description	Page No
-					
010	2587286-0000		1	SUPPORT	
020	2630482-0000		1	BRACKET	
030	2661094-0000		2	SCREW	
040	2662211-0000		2	CHAIN	
050	2675434-0000		1	SUPPORT	
100	90459-3618		1	HAND OPERATED CHAIN-HOIST, P.H.D. 250KG	
110	312105-0370		2	SCREW M6S ISO 4017 M6X20 A480	
120	318301-0120		1	LIFTING EYE BOLT, LT M10 FZB	
130	312625-0320		1	HEXAGON THIN NUT, EN 24035 ML6M M10 A4	
140	315105-0153		2	WASHER BRB 6,4X12 RFR	
150	312101-0293		4	SCREW M6S M4X16 FZB	
160	312607-0312		4	HEXAGON NUT, EN 24032 M6M M4 A480	
170	312105-0455		2	SCREW M6S ISO 4017 M8X30 A480	
200	2690557-0101		1	DOCUMENT FOLDER	

Pos	Part No	UN	Qty	Description	Page No

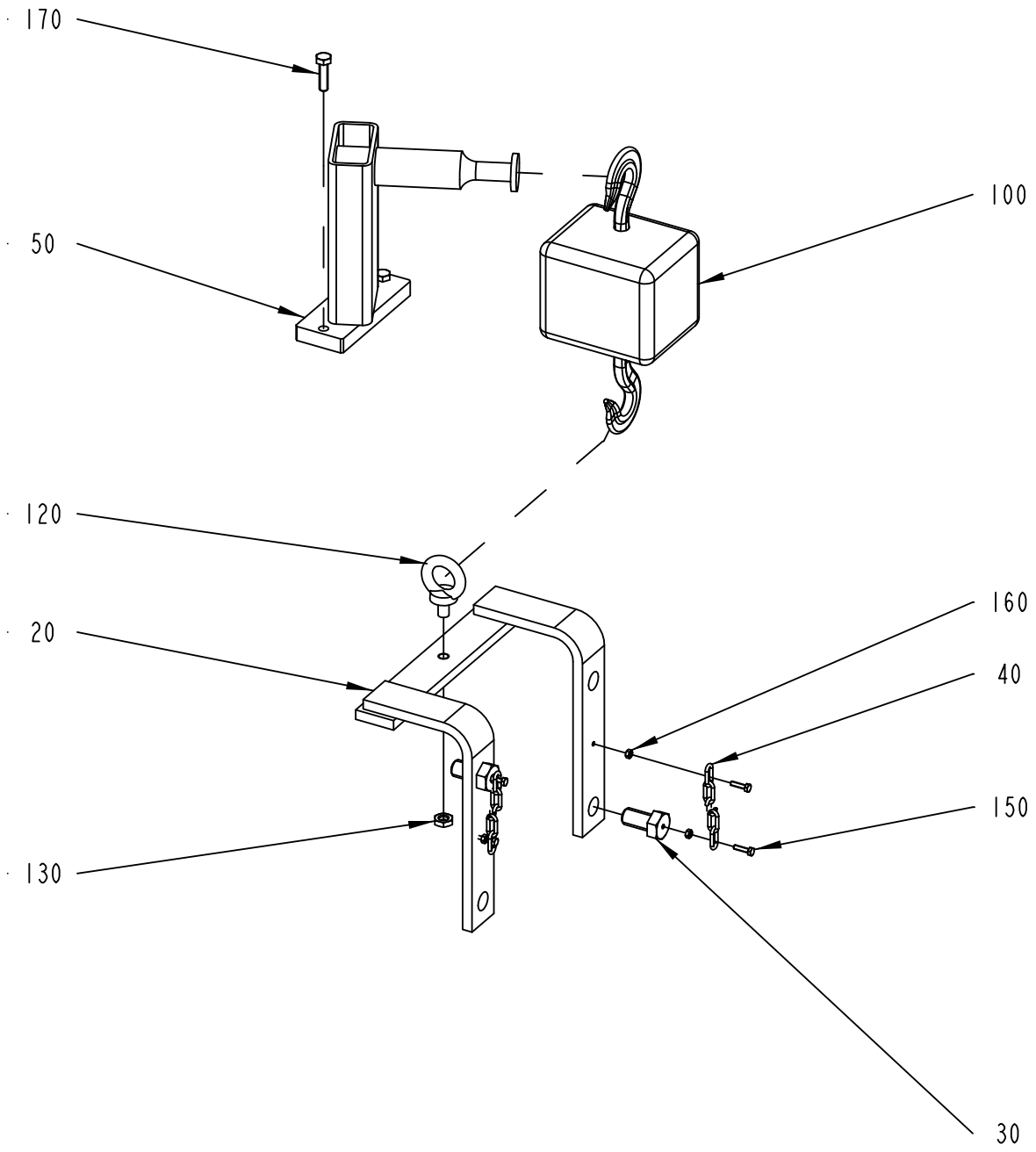

2646428-2
ECM 152887

ECM: 153155 - 20040511
Group number: 2646428-0100
Assembly Drawing: 2646428-2_1_AA

This list covers pages from 11-18 to 11-21

Pos	Part No	UN	Qty	Description	Page No
-					
010	2587286-0000		1	SUPPORT	
020	2630482-0000		1	BRACKET	
030	2661094-0000		2	SCREW	
040	2662211-0000		2	CHAIN	
050	2675434-0000		1	SUPPORT	
100	90459-3618		1	HAND OPERATED CHAIN-HOIST, P.H.D. 250KG	
110	312105-0370		2	SCREW M6S ISO 4017 M6X20 A480	
120	318301-0120		1	LIFTING EYE BOLT, LT M10 FZB	
130	312625-0320		1	HEXAGON THIN NUT, EN 24035 ML6M M10 A4	
140	315105-0153		2	WASHER BRB 6,4X12 RFR	
150	312101-0293		4	SCREW M6S M4X16 FZB	
160	312607-0312		4	HEXAGON NUT, EN 24032 M6M M4 A480	
170	312105-0455		2	SCREW M6S ISO 4017 M8X30 A480	
200	2690557-0101		1	DOCUMENT FOLDER	

Pos	Part No	UN	Qty	Description	Page No

This page is intentionally left blank.

ECM: 121958 - 20030403
Group number: 2559112-0100
Assembly Drawing:

Pos	Part No	UN	Qty	Description	Page No
-					
10	90410-0338		1	CALIBRATION INSTRUMENT 5100071-001	
20	90326-0308		1	THERMOCOUPLE CABLE FOR CE-557793/MALE 5M	
30	90326-0309		1	THERMOCOUPLE CABLE FOR CE-557793/FEMALE	
40	90194-0113		1	ADHESIVE LABEL, CALIBRATED & DATE	
50	90410-0337		1	CALIBRATION INSTRUMENT 5100071-001	
60	90326-0310		1	THERMOCOUPLE, 5130020-000	

Pos	Part No	UN	Qty	Description	Page No

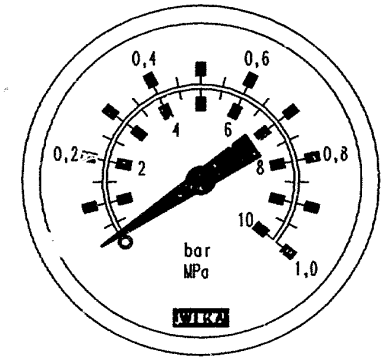
0,4
0,6
0,2
0,8
1
2
4
6
8
10
bar
MPa
1,0
WIKA

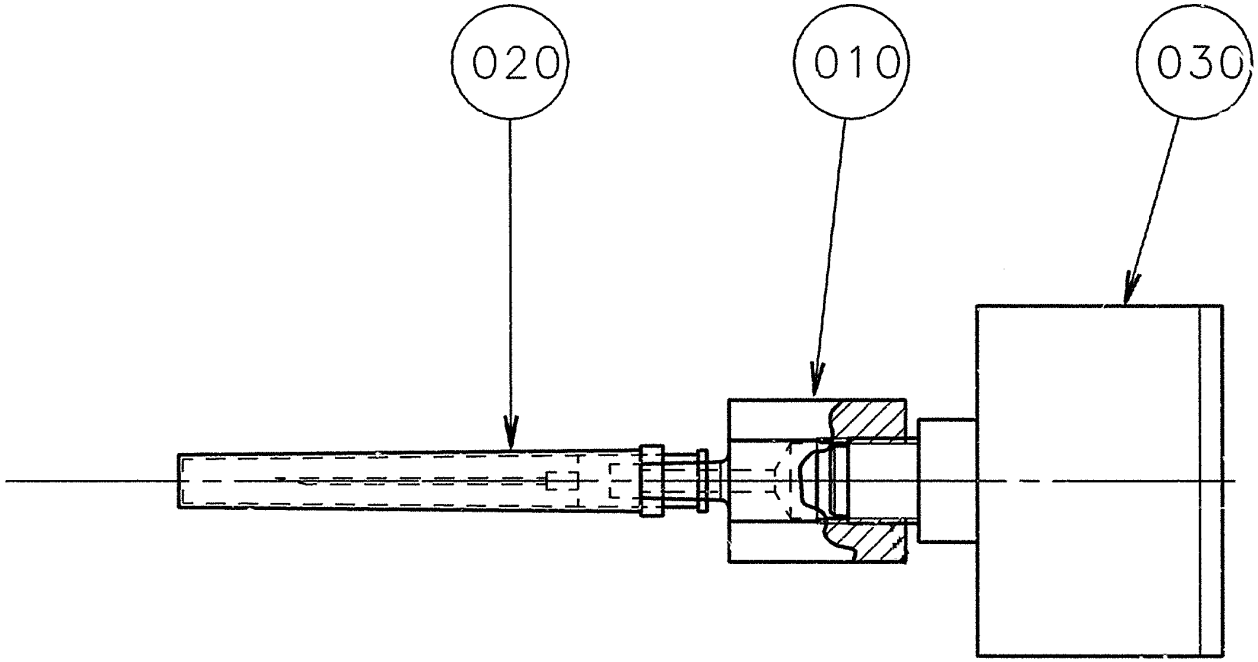
020
010
030

ECM: 390677 - 20090310
Group number: 1478583-0100
Assembly Drawing: 1478583-1_1_AA

Pos	Part No	UN	Qty	Description	Page No
-					
010	1478584-0000		1	NIPPLE	
020	1478585-0000		1	NEEDLE	
030	90458-2969		1	PRESSURE GAUGE, MAP-40-1-1/8-EN	

Pos	Part No	UN	Qty	Description	Page No

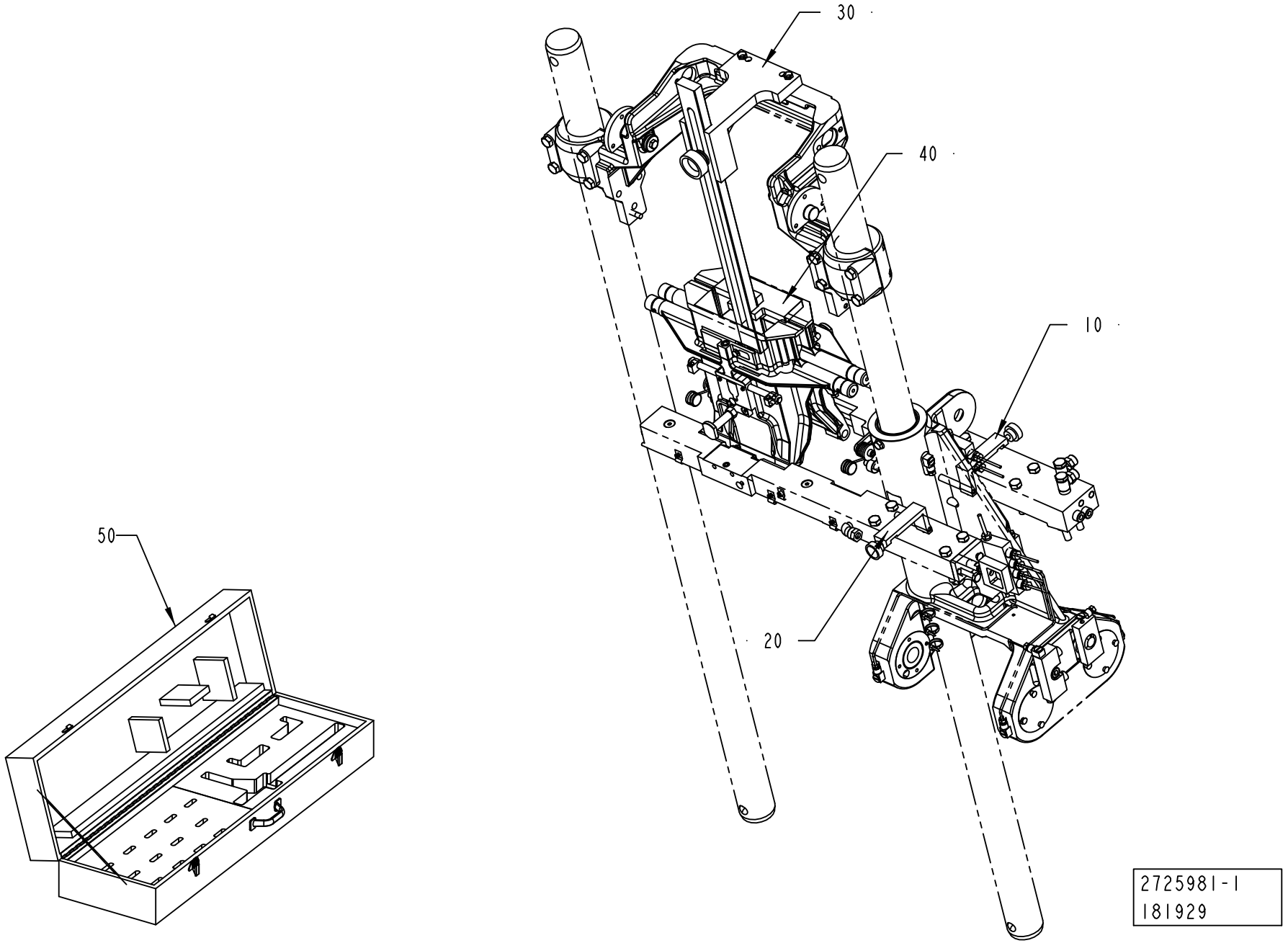
30
40
10
20
50
2725981-1
181929

ECM: 321713 - 20080101
Group number: 2725981-0100
Assembly Drawing: 2725981-1_1_AA

Pos	Part No	UN	Qty	Description	Page No
TBA 0200B, TBA 0250B, TBA 0330S					
040	1523091-0000		1	TEMPLATE	
TBA 0200M, TBA 0250S					
040	574455-0000		1	TEMPLATE	
TBA 0200S					
040	1140283-0000		1	TEMPLATE	
TBA 0200SQ, TBA 0250SQ					
040	2751518-0000		1	TEMPLATE	
TBA 0500B, TBA 1000B					
040	1140268-0000		1	TEMPLATE	
TBA 0500S					
040	1532998-0000		1	TEMPLATE	
TBA 1000S					
040	1140320-0000		1	TEMPLATE	
TBA 1000SQ					
040	1498117-0000		1	TEMPLATE	
TBA 1500S					
040	1478190-0000		1	TEMPLATE	
TBA 1890S, TBA 2000S, TBA 1400B					
040	2649440-0000		1	TEMPLATE	
TGA 1000SQ, TGA 0750SQ, TGA 0500SQ					
040	2698629-0000		1	TEMPLATE	
TPA 0250SQ, TPA 0200SQ					
040	1539893-0000		1	TEMPLATE	
TPA 0330SQ					
040	1539892-0000		1	TEMPLATE	
TPA 0500SQ					
040	2503692-0000		1	TEMPLATE	
TPA 1000SQ, TPA 0750SQ					
040	2503694-0000		1	TEMPLATE	
Common Parts					
010	2644317-0100		1	TEMPLATE	**11-29**
020	2644318-0100		1	TEMPLATE	**11-31**
030	2725982-0100		1	TEMPLATE	**11-33**
050	2710508-0000		1	TOOL BOX	

Pos	Part No	UN	Qty	Description	Page No

Machine Type	Group Description	Used-In	Group Number	Page No

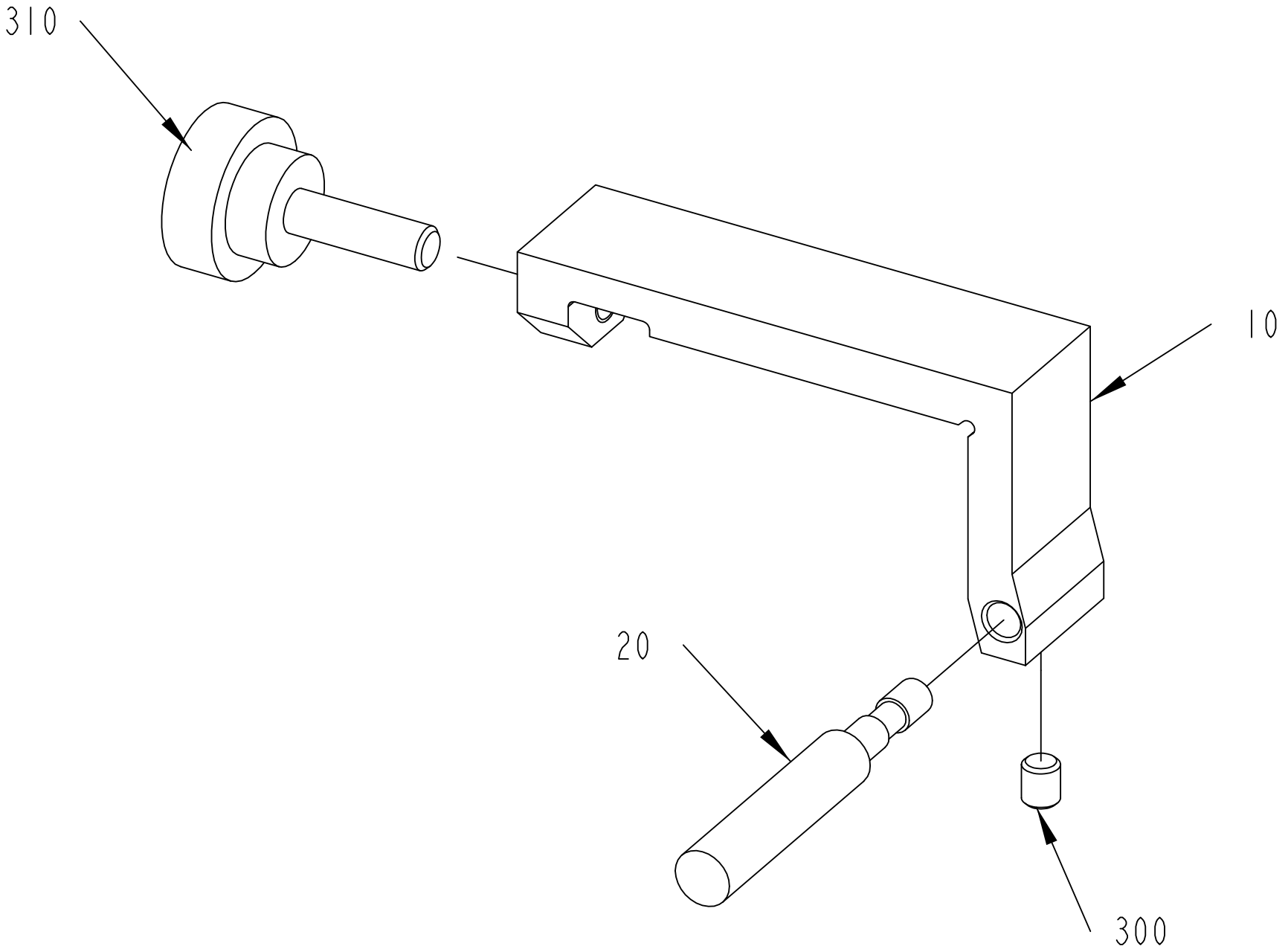
310
10
20
300
2644317-1
181929

ECM: 195311 - 20041203
Group number: 2644317-0100
Assembly Drawing: 2644317-1_1_AA

Pos	Part No	UN	Qty	Description	Page No
-					
010	2640116-0000		1	TOOL	
020	2640186-0000		1	TOOL	
300	312318-0321		1	SCREW ISO4029 M5X6 A4	
310	90051-0035		1	KNOB, EXTERNAL THREAD. NO. 8308-1135	

Pos	Part No	UN	Qty	Description	Page No

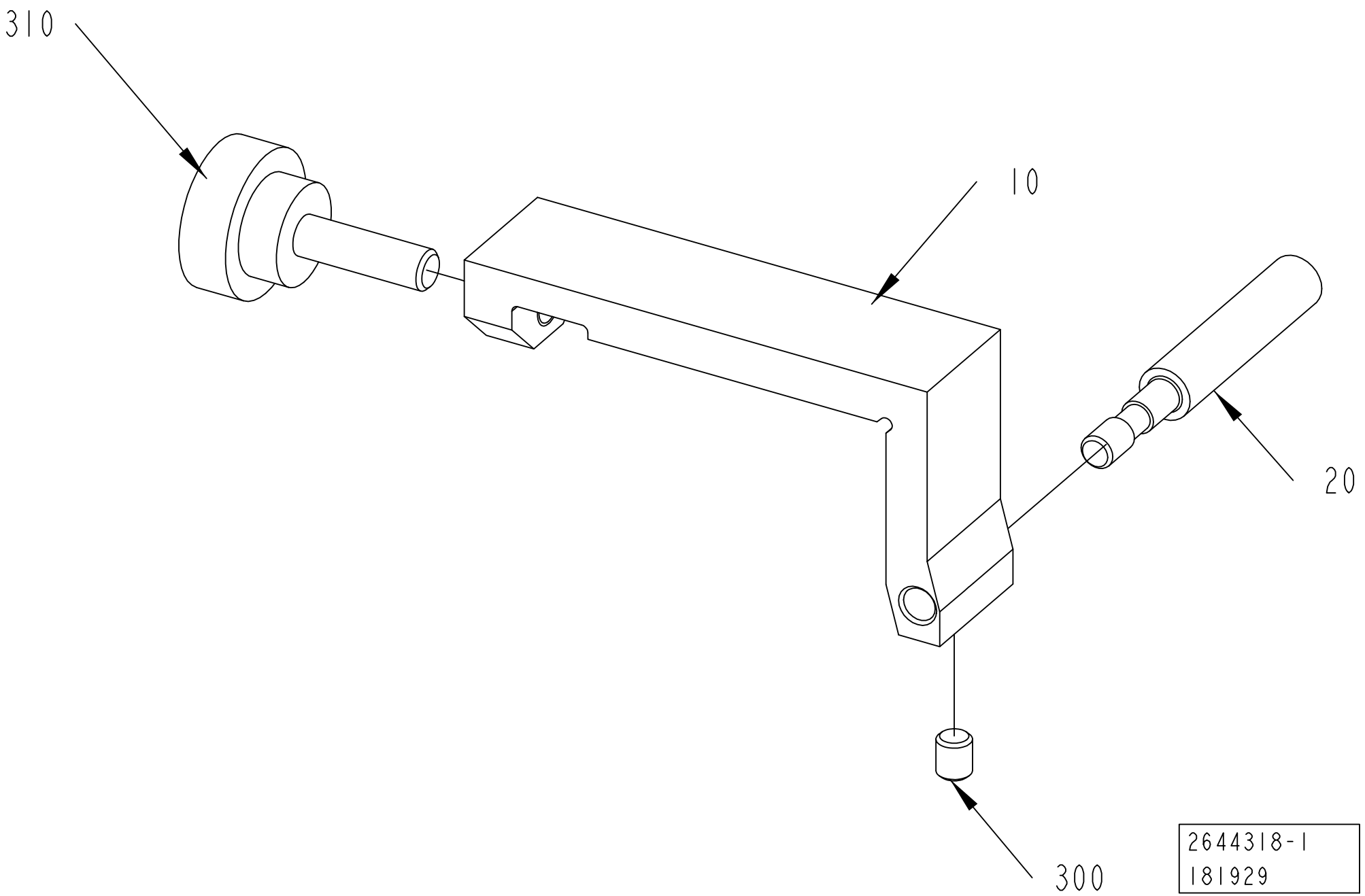
310
10
20
300
2644318-1
181929

ECM: 195312 - 20041203
Group number: 2644318-0100
Assembly Drawing: 2644318-1_1_AA

Pos	Part No	UN	Qty	Description	Page No
-					
010	2640116-0000		1	TOOL	
020	2640186-0000		1	TOOL	
300	312318-0321		1	SCREW ISO4029 M5X6 A4	
310	90051-0035		1	KNOB, EXTERNAL THREAD. NO. 8308-1135	

Pos	Part No	UN	Qty	Description	Page No

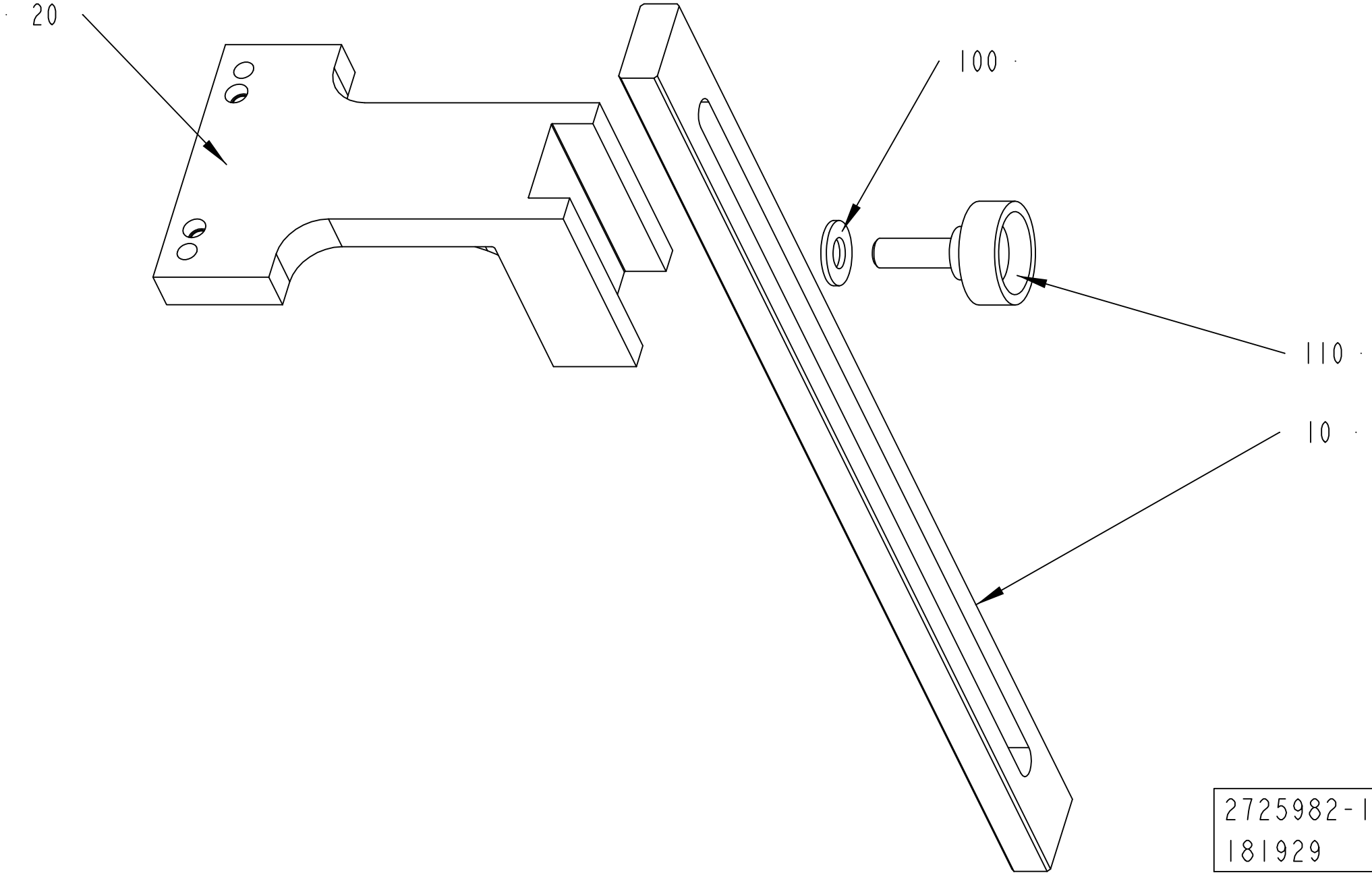
20
100
110
10
2725982-1
181929

ECM: 195314 - 20041203
Group number: 2725982-0100
Assembly Drawing: 2725982-1_1_AA

Pos	Part No	UN	Qty	Description	Page No
-					
010	2640814-0000		1	RULER	
020	2640292-0000		1	TOOL	
100	315105-0173		1	WASHER BRB 10,5X22 RFR	
110	318856-0109		1	KNOB, EXTERNAL THREAD. NO. 8308-1658	

Pos	Part No	UN	Qty	Description	Page No

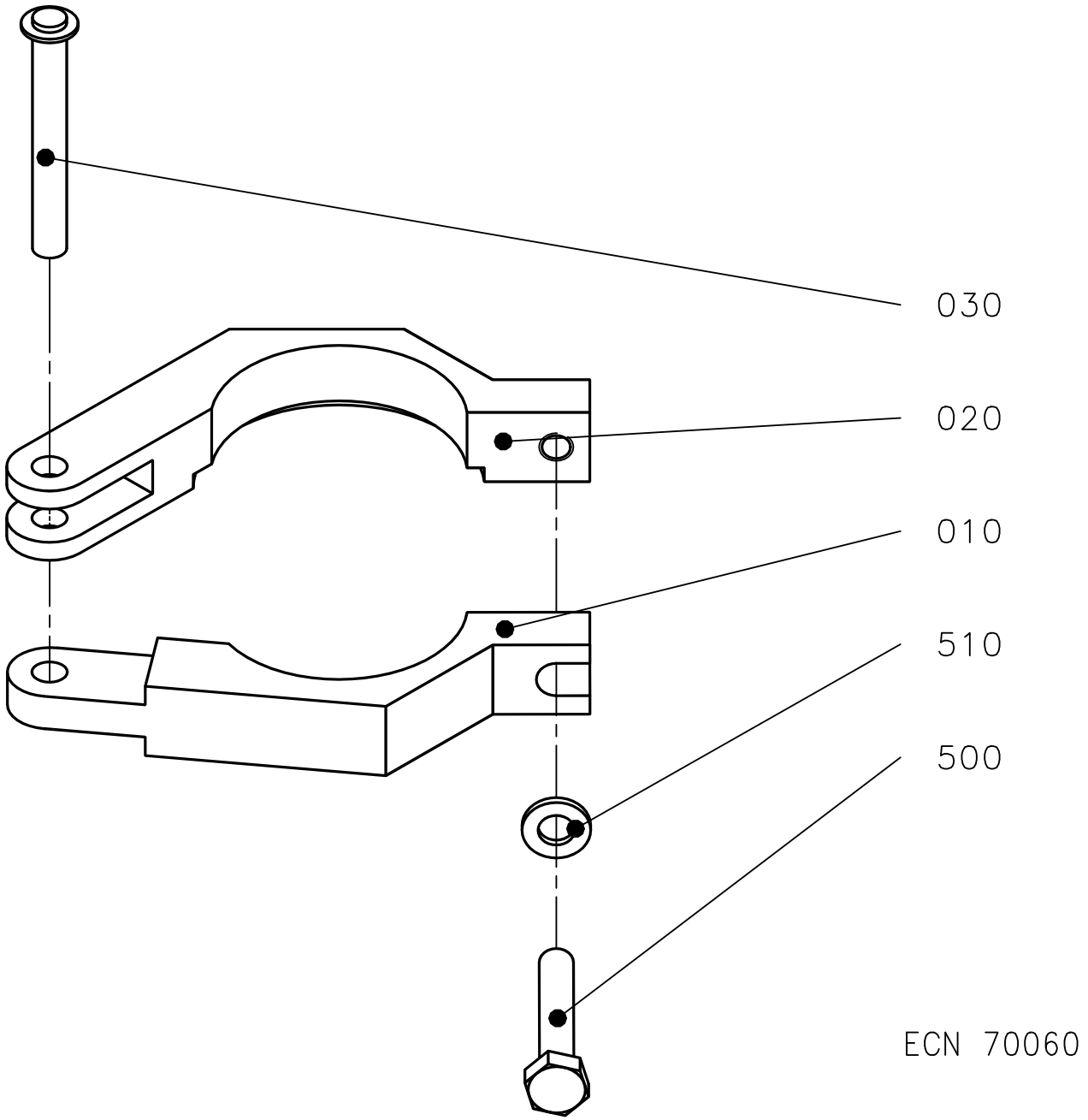
030
020
010
510
500
ECN 70060

ECM: 70060 - 19960315
Group number: 1035362-0100
Assembly Drawing: 1035362-1_1_AA

Pos	Part No	UN	Qty	Description	Page No
-					
010	1037696-0000		1	CLAMPING PIECE	
020	1037697-0000		1	CLAMPING PIECE	
030	74655-0000		1	SHAFT	
500	312105-0374		1	SCREW M6S ISO 4014 M6X30 A480	
510	315105-0153		1	WASHER BRB 6,4X12 RFR	

Pos	Part No	UN	Qty	Description	Page No

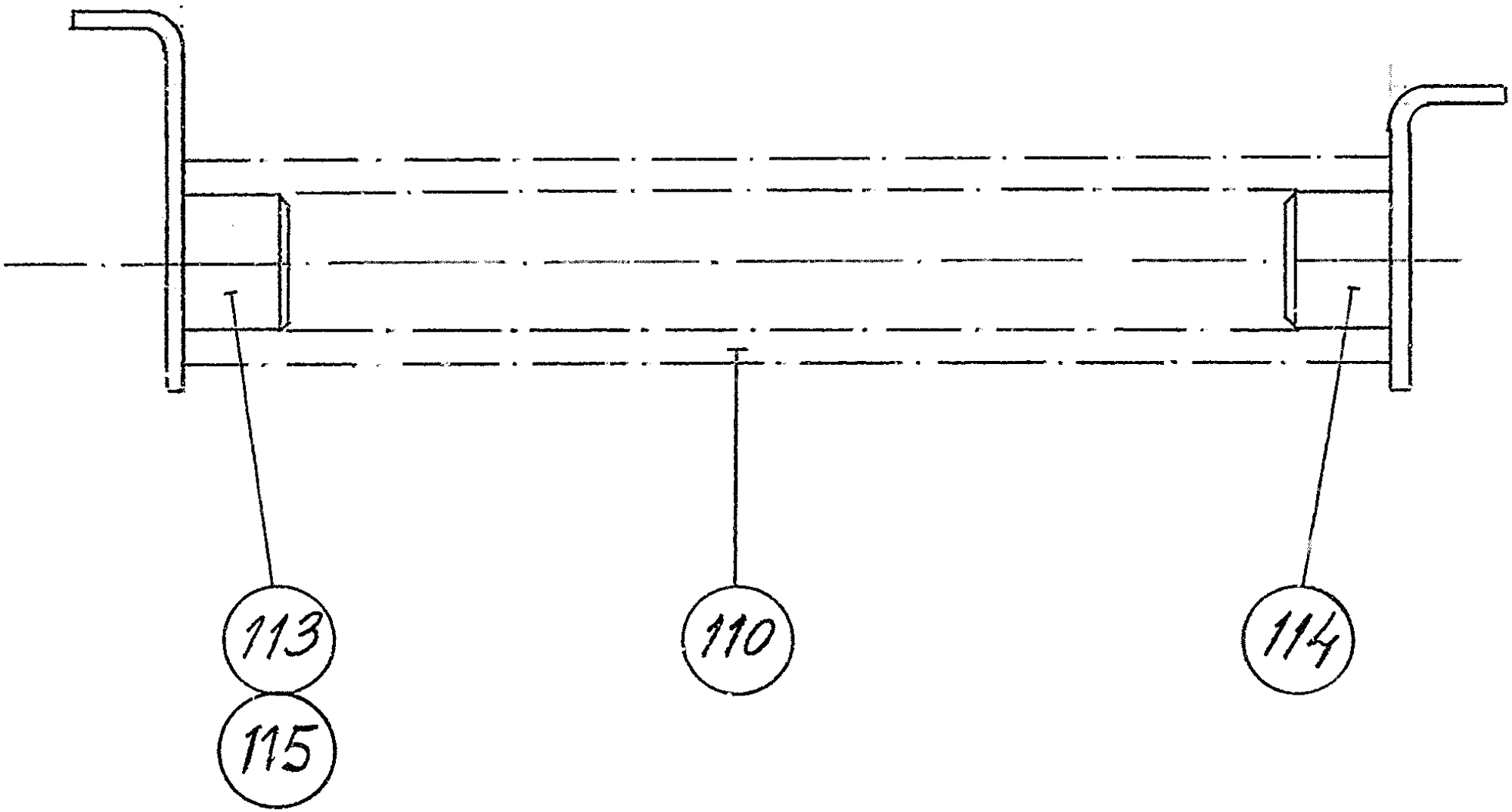
113
115
110
114

ECM: 71001 - 19970802
Group number: 72846-0101
Assembly Drawing: 72846-1_1_AA

Pos	Part No	UN	Qty	Description	Page No
-					
110	72887-0000		1	COMPRESSION SPRING	
113	72888-0001		1	SPRING BRACKET	
114	72888-0002		1	SPRING BRACKET	

Pos	Part No	UN	Qty	Description	Page No

This page is intentionally left blank.

ECM: 370082 - 20090101
Group number: 1095884-0100
Assembly Drawing:

Pos	Part No	UN	Qty	Description	Page No
TBA 0200M, TBA 0200B, TBA 0200SQ, TBA 0200S, TBA 0250S, TBA 0250B, TBA 0330S, TPA 0330SQ, TPA 0250SQ, TPA 0200SQ, TBA 0250SQ					
010	76131-0000		1	ASSEMBLY CONE	
011	76132-0000		1	ASSEMBLY TOOL	
012	78801-0000		1	CALIBRATION TOOL	
030	90091-0387		1	ASSEMBLY TOOL	
TBA 0500S, TBA 0500SQ, TBA 0500B, TBA 1000B, TBA 1000SQ, TBA 1000S, TBA 1500S, TPA 1000SQ, TPA 0500SQ, TPA 0750SQ, TGA 1000SQ, TGA 0750SQ, TGA 0500SQ					
020	90091-0377		1	ASSEMBLY TOOL SLEEVE GLYD RING	
040	90091-0378		1	ASSEMBLY TOOL SLEEVE AQ-SEAL	
TBA 1890S, TBA 2000S, TBA 1400B					
020	2764475-0000		1	ASSEMBLY TOOL	
040	2778300-0000		1	ASSEMBLY TOOL	
040	90091-0378		1	ASSEMBLY TOOL SLEEVE AQ-SEAL	
Common Parts					
050	2925912-0000		1	TOOL	

Pos	Part No	UN	Qty	Description	Page No

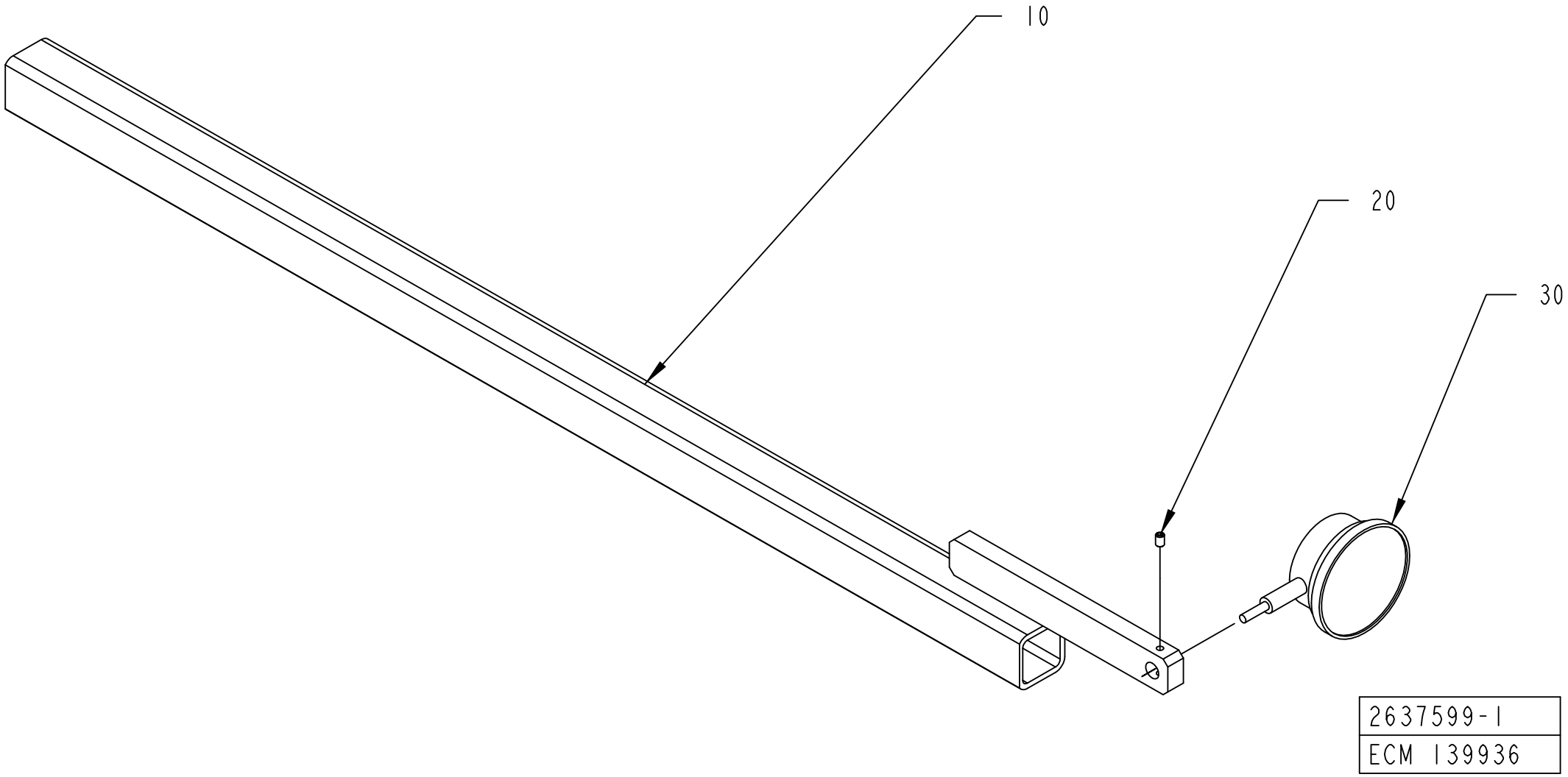
10
20
30
2637599-1
ECM 139936

ECM: 139936 - 20031001
Group number: 2637599-0100
Assembly Drawing: 2637599-1_1_AA

Pos	Part No	UN	Qty	Description	Page No
-					
010	2637600-0000		1	TOOL	
020	312318-0285		1	SCREW ISO4029 M4X6 A4	
030	90243-0461		1	MEASURE GAUGE,6916-0109	

Pos	Part No	UN	Qty	Description	Page No

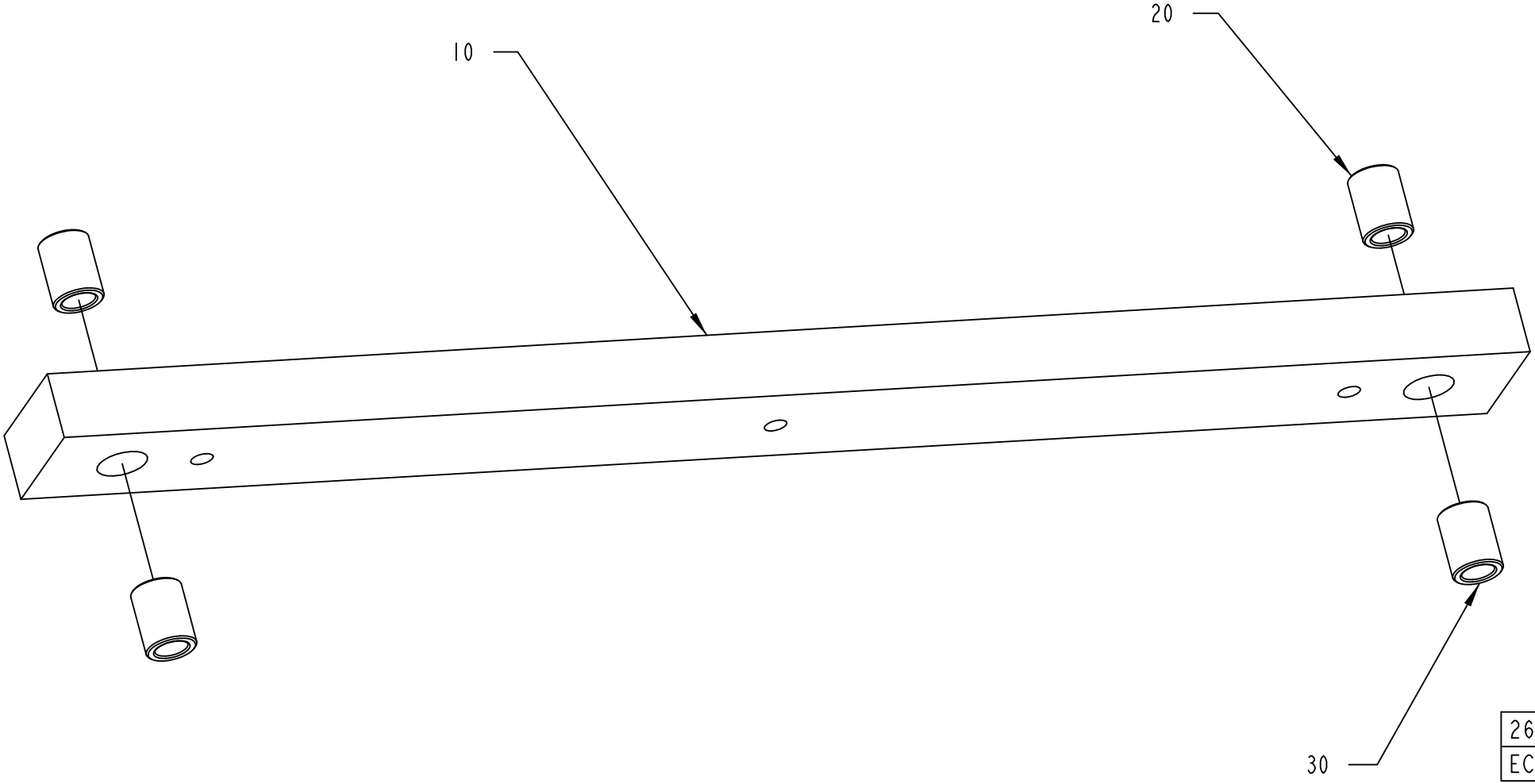

2637602-1
ECM 139936

ECM: 139936 - 20031001
Group number: 2637602-0100
Assembly Drawing: 2637602-1_1_AA

Pos	Part No	UN	Qty	Description	Page No
-					
010	2637603-0000		1	TOOL	
020	2637604-0000		2	BUSHING	
030	2637605-0000		2	BUSHING	

Pos	Part No	UN	Qty	Description	Page No

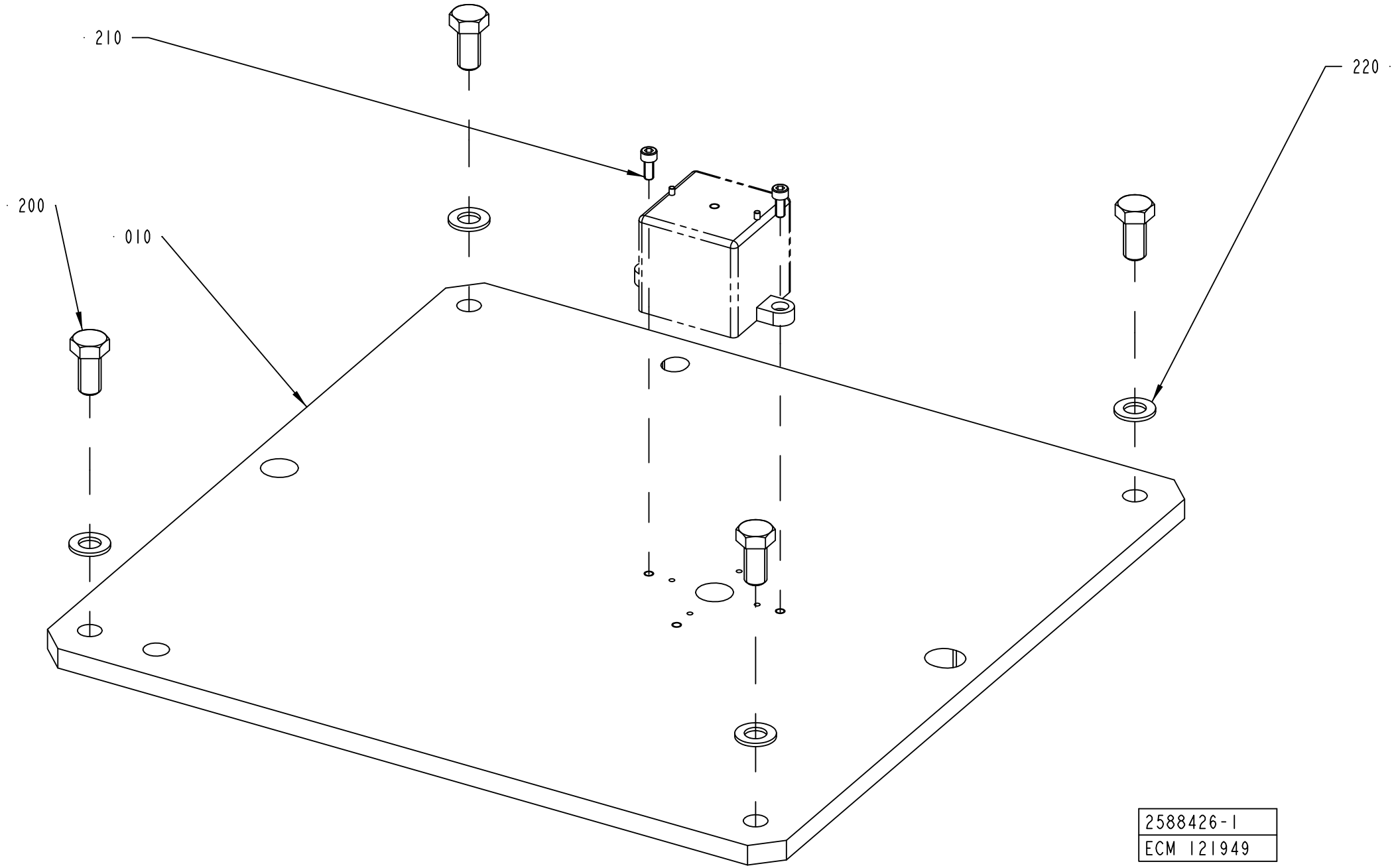
210
220
200
010
2588426-1
ECM 121949

ECM: 121961 - 20030403
Group number: 2588426-0100
Assembly Drawing: 2588426-1_1_AA

Pos	Part No	UN	Qty	Description	Page No
-					
010	2588425-0000		1	PLATE	
200	312105-0534		4	SCREW M6S ISO 4017 M12X25 A480	
210	312115-0327		2	SCREW ISO4762 M5X12 A4 80	
220	315101-0176		4	WASHER PLAIN, BRB, 12/22 H=2	

Pos	Part No	UN	Qty	Description	Page No

This page is intentionally left blank.

ECM: 334204 - 20080401
Group number: 2564074-0100
Assembly Drawing:

Pos	Part No	UN	Qty	Description	Page No
-					
010	1532459-0100		1	SETTING TOOL	**11-49**
100	90600-4088		1	HOOK WRENCH SQUARE PIN, 282108	

Pos	Part No	UN	Qty	Description	Page No

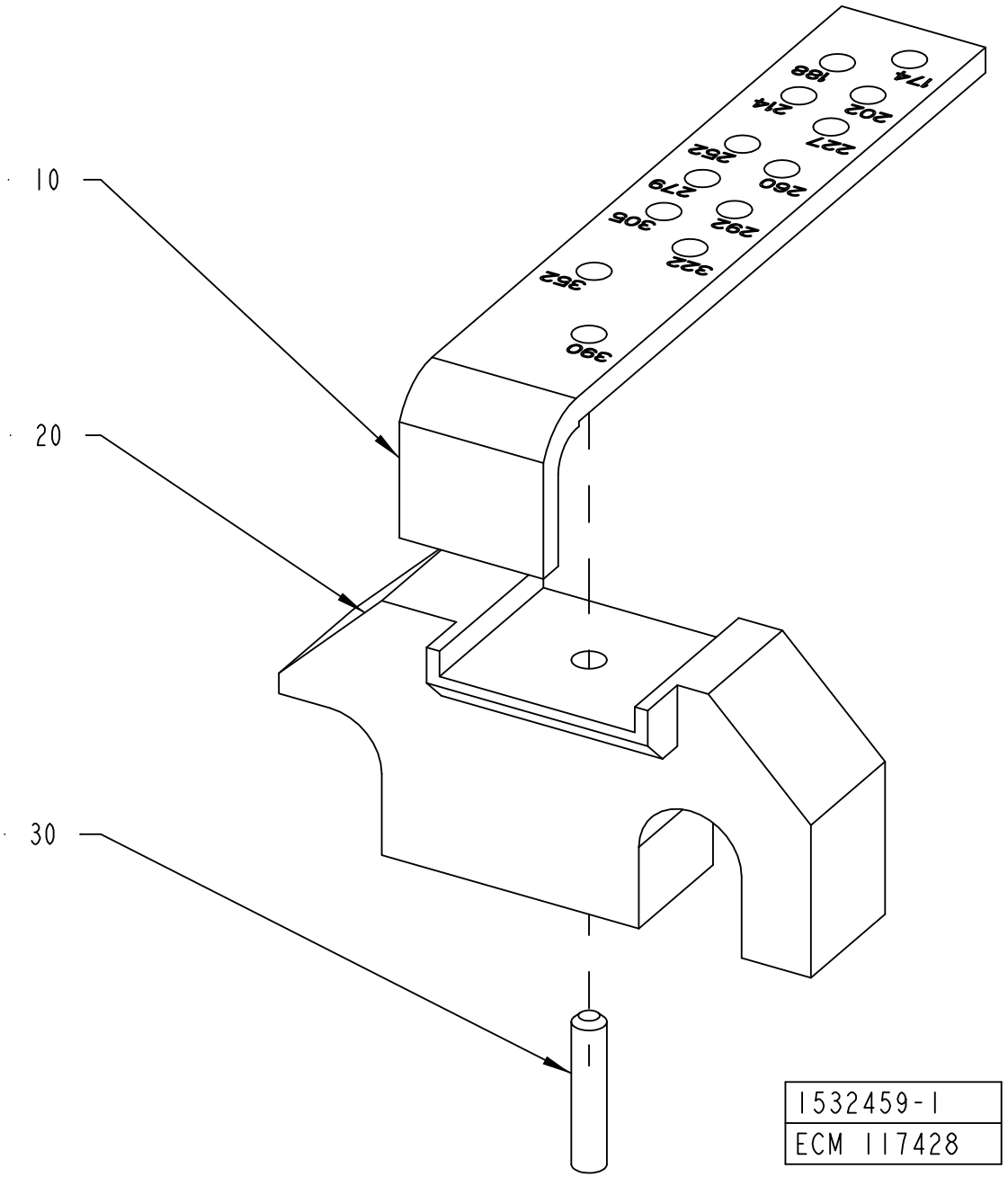
10
20
30
174
188
202
214
227
262
260
279
306
292
322
362
390
1532459-1
ECM 117428

ECM: 185718 - 20041005
Group number: 1532459-0100
Assembly Drawing: 1532459-1_1_AB

Pos	Part No	UN	Qty	Description	Page No
-					
010	1538234-0000		1	SPACER	
020	1532466-0000		1	BRACKET	
030	311103-0351		1	PARALLEL PIN ISO 2338 6M6X16 A1	

Pos	Part No	UN	Qty	Description	Page No

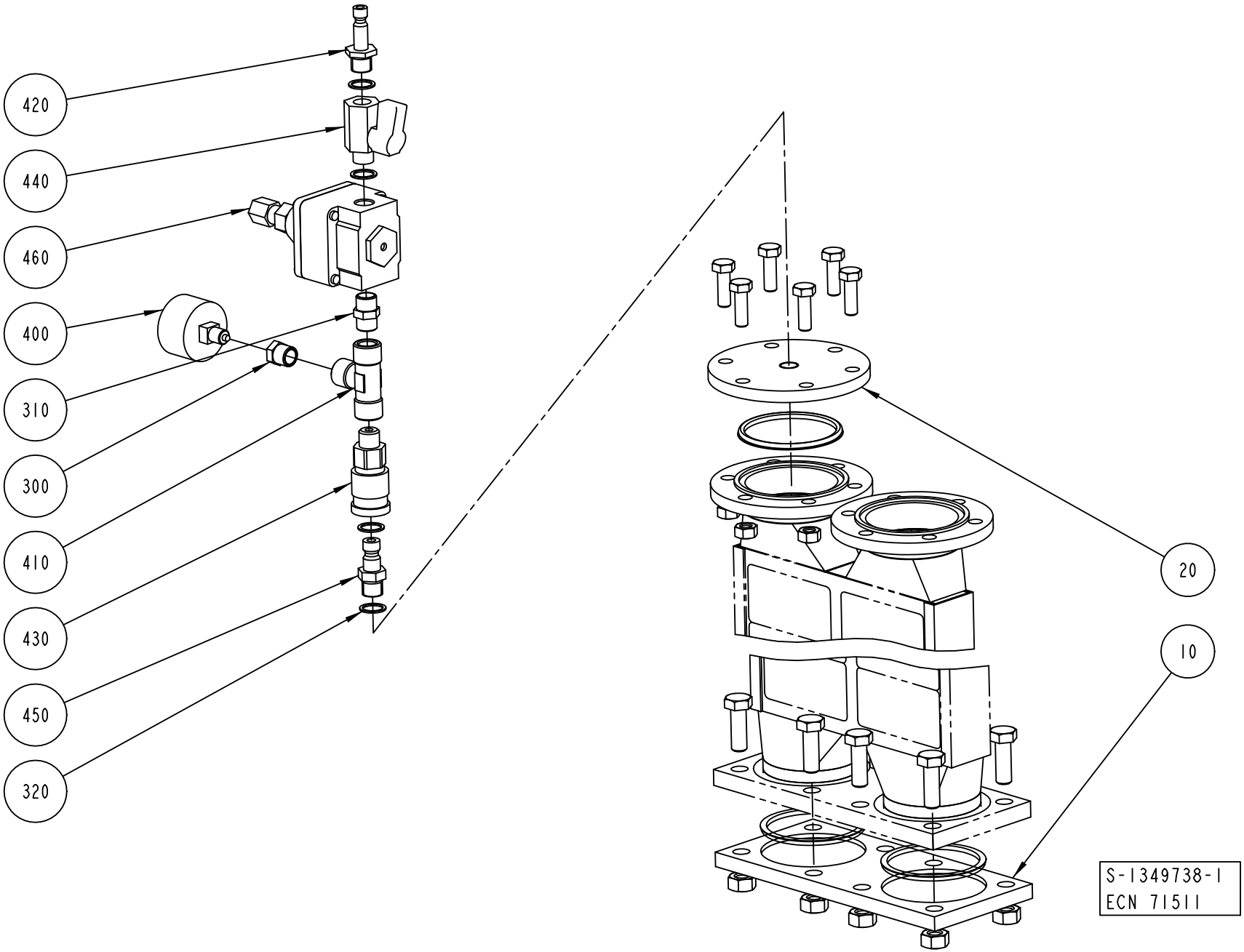
420
440
460
400
310
300
410
430
450
320
20
10
S-1349738-1
ECN 71511

ECM: 71511 - 19981102
Group number: 1349738-0100
Assembly Drawing: 1349738-1_1_AA

Pos	Part No	UN	Qty	Description	Page No
-					
010	1348263-0000		1	FLANGE	
020	979951-0000		1	FLANGE	
300	342701-0201		1	BUSHING,INT./EXT.G-THREAD G1/4"-G1/8"	
310	342700-0110		1	NIPPLES,HEXAGON,EXT.G-THREAD G1/4"-G1/4"	
320	315233-0110		4	WASHER CAPTIVE SEALING G1/4	
400	90043-0021		1	PRESSURE GAUGE 0-1 BAR 1/8" D=40	
410	90140-0018		1	T-PIPE, INT. THREAD, 2003-1/4	
420	90163-0007		1	CONNECTION	
430	90163-0016		1	QUICK COUPLING, (F) LP 006-0-WR013	
440	90187-0045		1	BALL VALVE G1/4 CR PL	
450	90163-0113		1	QUICK COUPLING, (M) LP-006-1-WR013-22	
460	90113-0056		1	REGULATOR, 11-818-998	
500	567372-0000		1	INSTRUCTION FOR USE	

Pos	Part No	UN	Qty	Description	Page No

Machine Type | Group Description | Used-In | Group Number | Page No

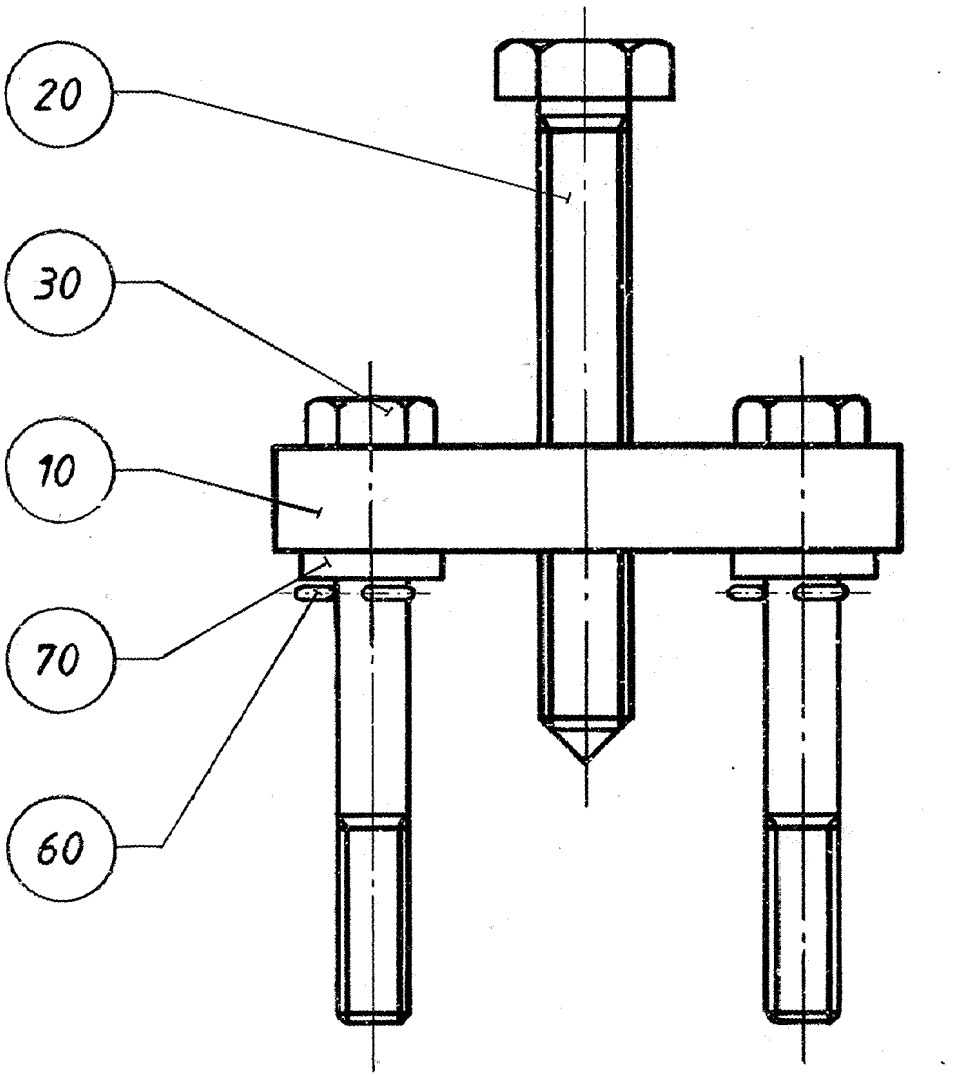
20
30
10
70
60

ECM: - -
Group number: 74305-0100
Assembly Drawing: 74305-1_1_AA

Pos	Part No	UN	Qty	Description	Page No
-					
010	74363-0000		1	FASTENING PLATE	
020	74364-0000		1	EXTRACTOR BOLT	
030	74365-0000		2	SCREW	
060	311411-0152		2	SPLIT PIN SP2X16RFR	
070	315115-0165		2	WASHER PLAIN, TBRB 8,4/16 H=3	

Pos	Part No	UN	Qty	Description	Page No

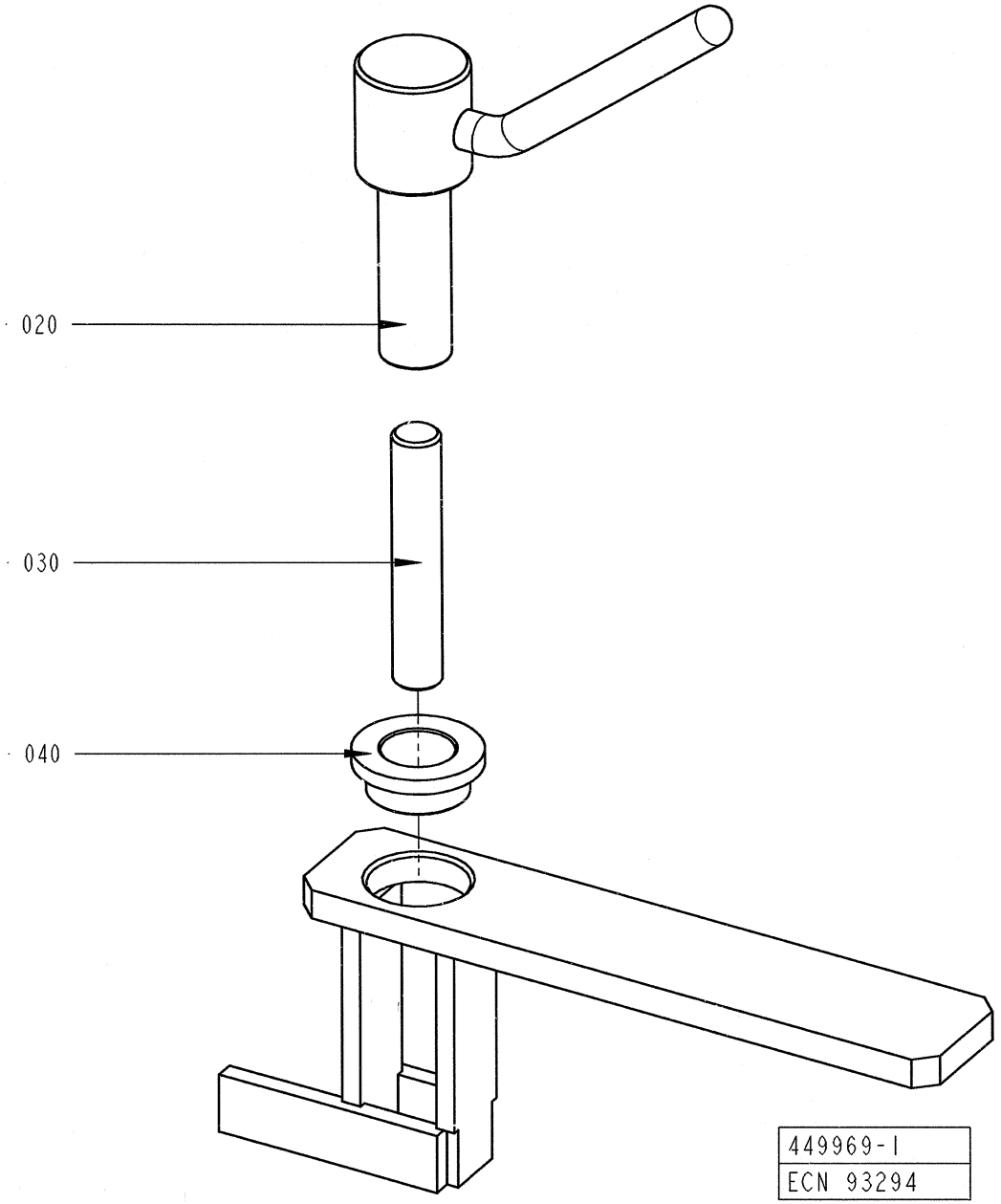
020
030
040
449969-1
ECN 93294

ECM: 6514 -
Group number: 449969-0100
Assembly Drawing: 449969-1_1_AA

Pos	Part No	UN	Qty	Description	Page No
-					
010	449970-0000		1	HOLDER	
020	449971-0000		1	SPINDLE	
030	312306-0546		1	SCREW ISO4026 M12X70 FZB	
040	321101-0222		1	FLANGE BUSHING, 18X25X12	

Pos	Part No	UN	Qty	Description	Page No

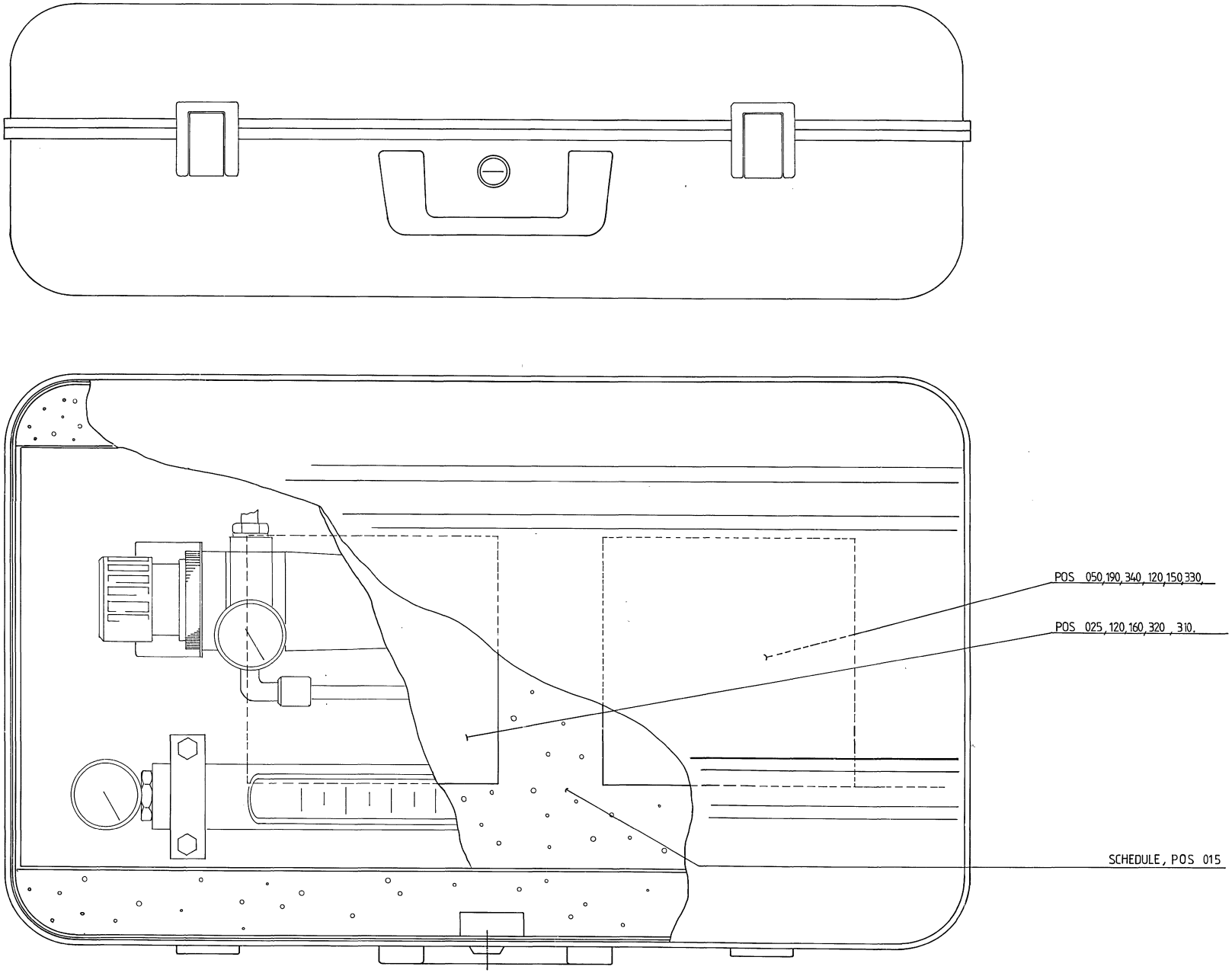
POS 050,190,340, 120,150,330,
POS 025, 120,160,320 , 310,
SCHEDULE, POS 015

ECM: 71889 - 19980924
Group number: 533014-0100
Assembly Drawing: 533014-1_1_AA

This list covers pages from 11-56 to 11-59

Pos	Part No	UN	Qty	Description	Page No
-					
010	533905-0100		1	PONCH	**11-61**
010	532676-0000		1	SHEET	
015	533015-0000		1	WIRING DIAGRAM	
020	1360399-0000		4	PIPE HOLDER	
025	493735-0000		1	NIPPLE	
030	532677-0000		1	PIPE	
040	532678-0000		1	DOWEL	
050	532679-0000		1	PLATE	
060	90030-0223		1	BUSHING, INT/EXT. G-THREAD NO. 2531	
070	90030-0224		1	NIPPLES, EXT. THREAD, HEXAGON, NO. 2511	
075	90030-0225		2	BUSHING, INT/EXT. R-THREAD 1/4X3/8	
080	90043-0021		1	PRESSURE GAUGE 0-1 BAR 1/8" D=40	
090	90043-0043		1	PRESSURE GAUGE 0-10 BAR 1/8"	
100	90113-0059		1	FILTER REGULATOR 50UM, B08-396-A3MG	
110	90140-0015		1	T-PIPE, INT. THREAD, 2003-1/8	
120	90163-0056		2	QUICK COUPLING, (F) 5054-6/4	
130	90163-0057		1	QUICK COUPLING, (M) 5150-1/8	
140	90163-0087		1	QUICK COUPLING, (M) 5150-1/4	
150	90166-0124	MM	1250	TUBE 6 MM PA,TRANSP.	
160	90166-0124	MM	1250	TUBE 6 MM PA,TRANSP.	
170	90224-0303		2	CONN. ELBOW 1020-8-1/4	
172	90113-0384		1	BRACKET FOR R11, 5203-06	
175	90243-0137		1	PRESSURE GAUGE KIT 0-50 MM WC, 229900	
180	90243-0147		1	FLOW METER	
190	90330-0029		1	PLUG, EXT. G-THREAD, R-236R3/8	
200	312105-0325		2	SCREW M6S ISO 4017 M5X10 A480	
210	312105-0383		4	SCREW M6S ISO 4014 M6X65 A480	
220	312602-0312		1	HEXAGON NUT, EN 24032 M6M M4 NIPLBR	
230	312605-0314		2	HEXAGON NUT, M6M M5 A280	
240	312605-0316		4	HEXAGON NUT, M6M M6 A280	
250	315103-0136		1	WASHER PLAIN, BRB, 4,3/8,H=0,8 NI PL BR	
260	315105-0146		4	WASHER BRB 5,3X10 RFR	
270	315105-0153		8	WASHER BRB 6,4X12 RFR	
280	315233-0109		2	WASHER CAPTIVE SEALING G1/8	
290	315233-0110		1	WASHER CAPTIVE SEALING G1/4	
295	315233-0111		2	WASHER CAPTIVE SEALING G3/8	
300	315233-0113		2	WASHER CAPTIVE SEALING G1/2	
310	342921-0113		1	STRAIGHT COUPLING,EXT.THREADED 6/4-G1/8"	
320	342921-0114		1	STRAIGHT COUPLING,EXT.THREADED 6/4-G1/4"	
330	342980-0114		1	BANJO-CONNECTION,RING 6/4-G1/4"	
340	342980-0314		1	BANJO-HOLLOW BOLT COUPL,EXT.THR.02-G1/4	
350	342701-0201		1	BUSHING,INT./EXT.G-THREAD G1/4"-G1/8"	

Machine Type | Group Description | Used-In | Group Number | Page No

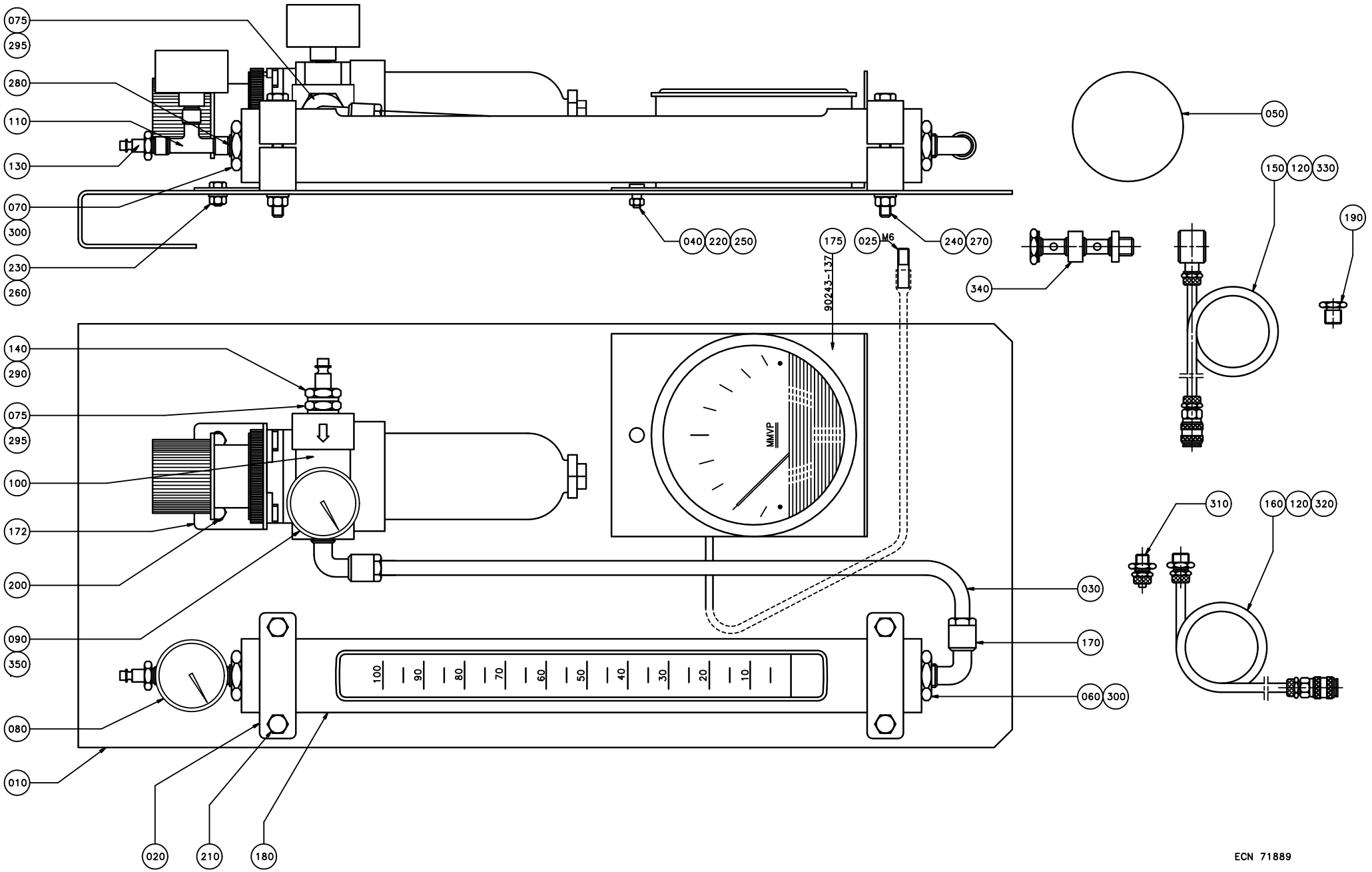
075
295
280
110
130
070
300
230
260
040
220
250
175
025
M6
240
270
90243-137
340
050
150
120
330
190
140
290
075
295
100
172
200
090
350
080
010
020
210
180
MMVP
030
170
060
300
310
160
120
320
100
90
80
70
60
50
40
30
20
10
ECN 71889

ECM: 71889 - 19980924
Group number: 533014-0100
Assembly Drawing: 533014-2_1_AB

This list covers pages from 11-56 to 11-59

Pos	Part No	UN	Qty	Description	Page No
-					
010	533905-0100		1	PONCH	**11-61**
010	532676-0000		1	SHEET	
015	533015-0000		1	WIRING DIAGRAM	
020	1360399-0000		4	PIPE HOLDER	
025	493735-0000		1	NIPPLE	
030	532677-0000		1	PIPE	
040	532678-0000		1	DOWEL	
050	532679-0000		1	PLATE	
060	90030-0223		1	BUSHING, INT/EXT. G-THREAD NO. 2531	
070	90030-0224		1	NIPPLES, EXT. THREAD, HEXAGON, NO. 2511	
075	90030-0225		2	BUSHING, INT/EXT. R-THREAD 1/4X3/8	
080	90043-0021		1	PRESSURE GAUGE 0-1 BAR 1/8" D=40	
090	90043-0043		1	PRESSURE GAUGE 0-10 BAR 1/8"	
100	90113-0059		1	FILTER REGULATOR 50UM, B08-396-A3MG	
110	90140-0015		1	T-PIPE, INT. THREAD, 2003-1/8	
120	90163-0056		2	QUICK COUPLING, (F) 5054-6/4	
130	90163-0057		1	QUICK COUPLING, (M) 5150-1/8	
140	90163-0087		1	QUICK COUPLING, (M) 5150-1/4	
150	90166-0124	MM	1250	TUBE 6 MM PA,TRANSP.	
160	90166-0124	MM	1250	TUBE 6 MM PA,TRANSP.	
170	90224-0303		2	CONN. ELBOW 1020-8-1/4	
172	90113-0384		1	BRACKET FOR R11, 5203-06	
175	90243-0137		1	PRESSURE GAUGE KIT 0-50 MM WC, 229900	
180	90243-0147		1	FLOW METER	
190	90330-0029		1	PLUG, EXT. G-THREAD, R-236R3/8	
200	312105-0325		2	SCREW M6S ISO 4017 M5X10 A480	
210	312105-0383		4	SCREW M6S ISO 4014 M6X65 A480	
220	312602-0312		1	HEXAGON NUT, EN 24032 M6M M4 NIPLBR	
230	312605-0314		2	HEXAGON NUT, M6M M5 A280	
240	312605-0316		4	HEXAGON NUT, M6M M6 A280	
250	315103-0136		1	WASHER PLAIN, BRB, 4,3/8,H=0,8 NI PL BR	
260	315105-0146		4	WASHER BRB 5,3X10 RFR	
270	315105-0153		8	WASHER BRB 6,4X12 RFR	
280	315233-0109		2	WASHER CAPTIVE SEALING G1/8	
290	315233-0110		1	WASHER CAPTIVE SEALING G1/4	
295	315233-0111		2	WASHER CAPTIVE SEALING G3/8	
300	315233-0113		2	WASHER CAPTIVE SEALING G1/2	
310	342921-0113		1	STRAIGHT COUPLING,EXT.THREADED 6/4-G1/8"	
320	342921-0114		1	STRAIGHT COUPLING,EXT.THREADED 6/4-G1/4"	
330	342980-0114		1	BANJO-CONNECTION,RING 6/4-G1/4"	
340	342980-0314		1	BANJO-HOLLOW BOLT COUPL,EXT.THR.02-G1/4	
350	342701-0201		1	BUSHING,INT./EXT.G-THREAD G1/4"-G1/8"	

Machine Type | Group Description | Used-In | Group Number | Page No

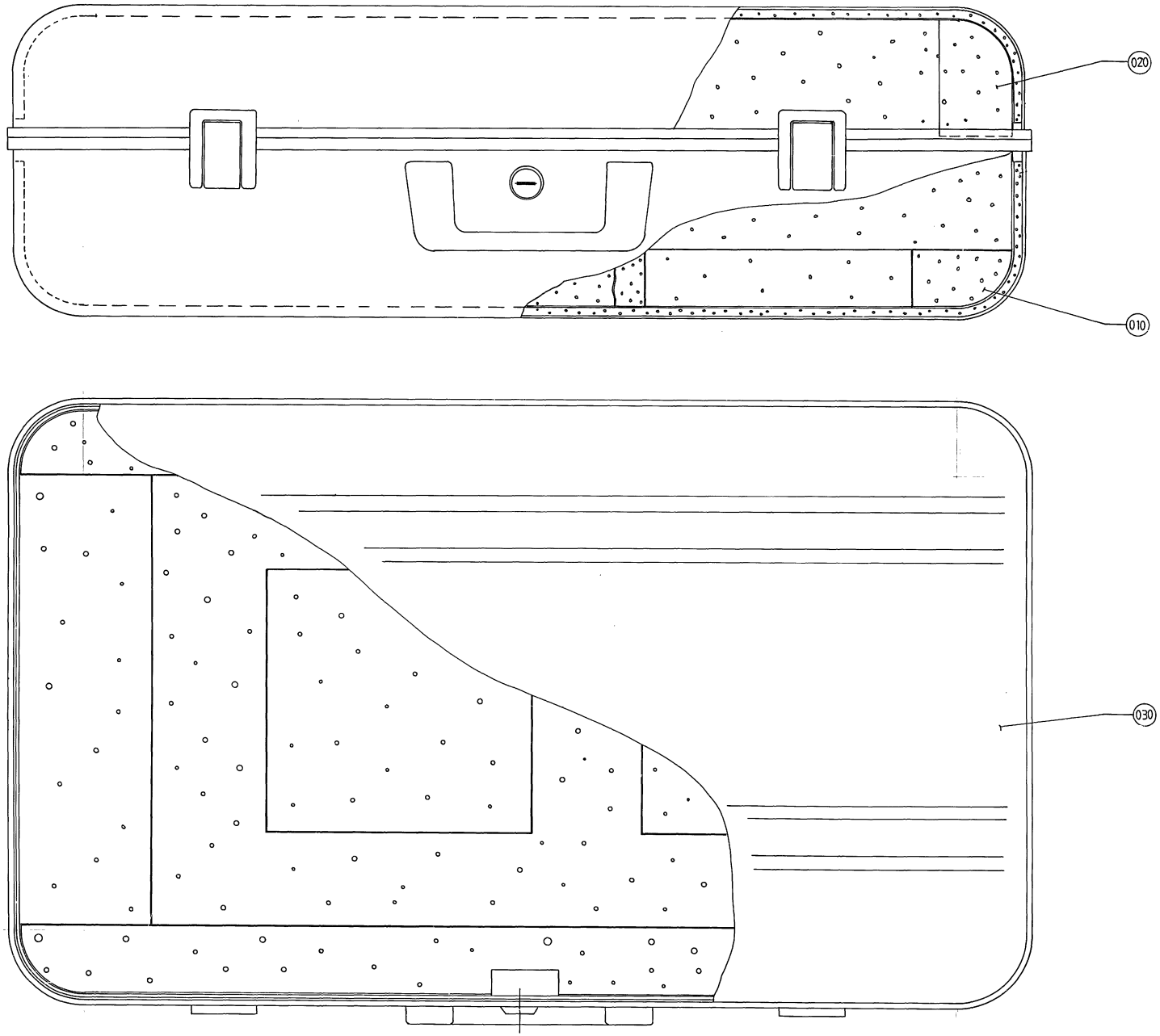
020
010
030

ECM: - -
Group number: 533905-0100
Assembly Drawing: 533905-1_1_AA

Pos	Part No	UN	Qty	Description	Page No
-					
010	533374-0000		1	FITMENT BOTTOM	
020	533906-0000		1	FITMENT COVER	
030	90243-0118		1	TOOL BOX, NO. ZERO 105X-SI	

Pos	Part No	UN	Qty	Description	Page No

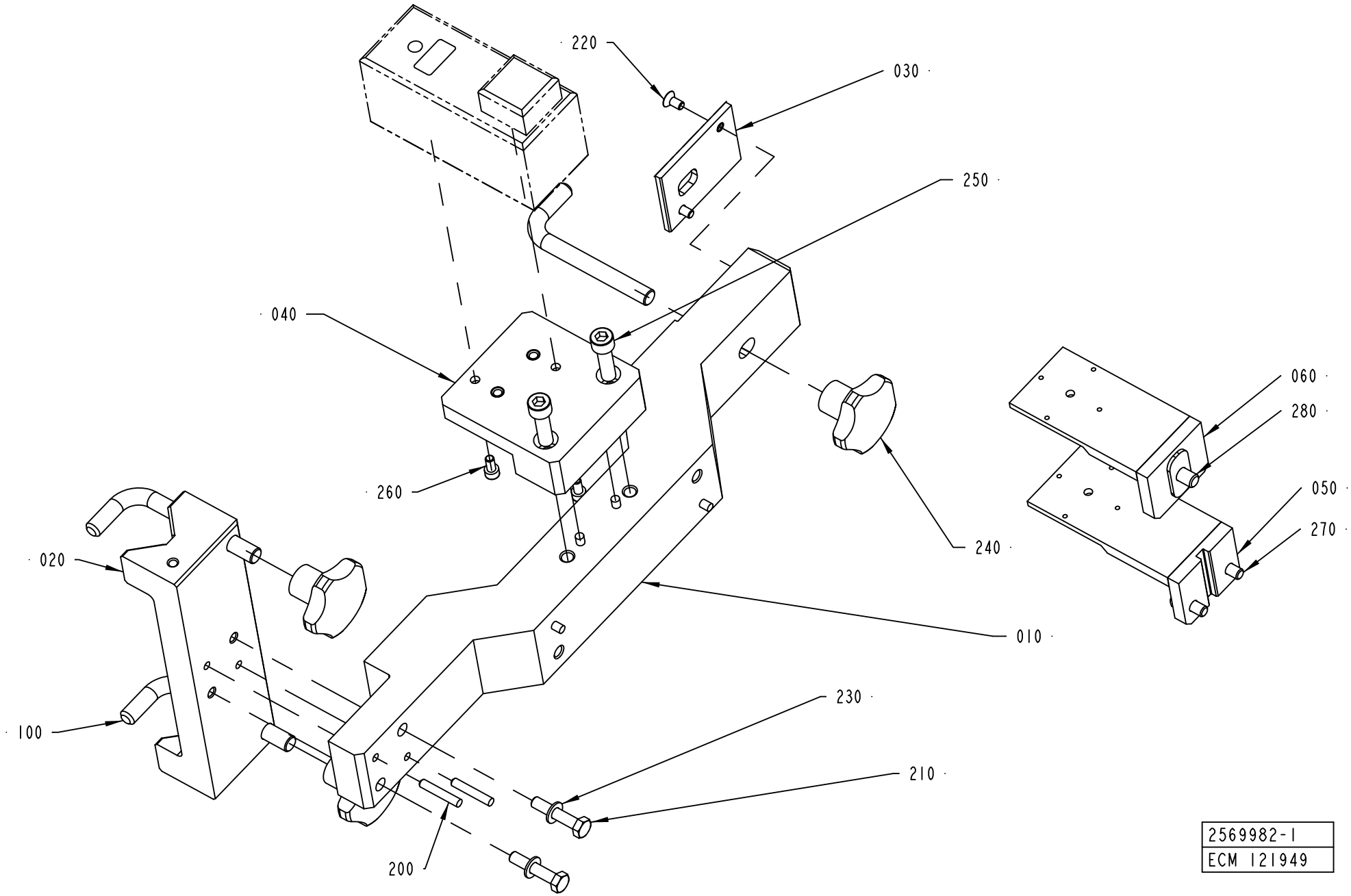
220
030
250
040
060
280
260
050
270
240
020
010
100
230
210
200
2569982-1
ECM 121949

ECM: 121962 - 20030403
Group number: 2569982-0100
Assembly Drawing: 2569982-1_1_AA

Pos	Part No	UN	Qty	Description	Page No
-					
010	2570741-0000		1	HOLDER	
020	2570746-0000		1	BRACKET	
030	2570747-0000		1	PLATE	
040	2570743-0000		1	BRACKET	
050	2515291-0000		1	BRACKET	
060	2515292-0000		1	BRACKET	
100	2523265-0000		3	HOOK	
200	311103-0359		2	PARALLEL PIN ISO 2338 6M6X35 A1	
210	312109-0459		2	SCREW M6S ISO 4017 M8X40 A480	
220	312155-0366		2	SCREW DIN 7991 MF6S M6X12 A4 70	
230	315105-0165		2	WASHER BRB 8,4X16 RFR	
240	318850-0113		3	STELLAR KNOB, INT. THREAD, NO. 8306-0367	
250	312111-0497		2	SCREW HEX.SOCK.HD.MC6S-TT 10X35 88 FZB	
260	312111-0366		2	SCREW HEX.SOCK.HD.MC6S-TT 6X12 88 FZB	
270	312105-0451		2	SCREW M6S ISO 4017 M8X20 A480	
280	312105-0493		1	SCREW M6S ISO 4017 M10X25 A480	

Pos	Part No	UN	Qty	Description	Page No

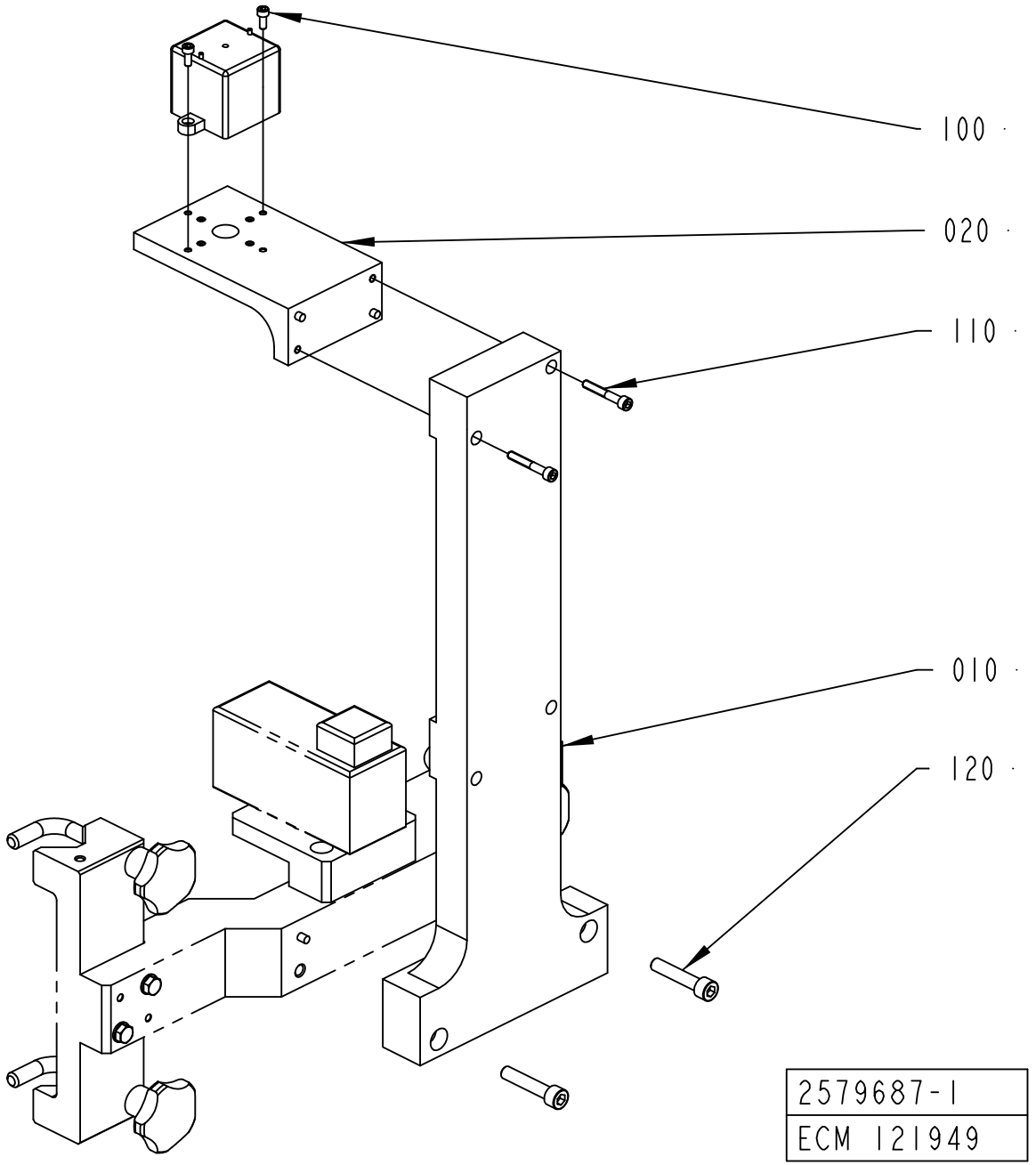
100
020
110
010
120
2579687-1
ECM 121949

ECM: 124333 - 20030403
Group number: 2579687-0100
Assembly Drawing: 2579687-1_1_AA

Pos	Part No	UN	Qty	Description	Page No
-					
010	2570744-0000		1	HOLDER	
020	2579688-0000		1	HOLDER	
100	312111-0327		2	SCREW HEX.SOCK.HD.MC6S-TT 5X12 88 FZB	
110	312115-0378		2	SCREW ISO4762 M6X40 A4 80	
120	312111-0501		2	SCREW HEX.SOCK.HD.MC6S-TT 10X50 88 FZB	

Pos	Part No	UN	Qty	Description	Page No

This page is intentionally left blank.

ECM: 354213 - 20080430
Group number: 2556261-0100
Assembly Drawing:

Pos	Part No	UN	Qty	Description	Page No
-					
010	527898-0100		1	MKS CONTAINER H2O2	**2-33, 11-69**
020	529345-0100		1	FILLING STATION H2O2	**11-71**
030	532210-0100		1	PEROXIDE CONTAINER TROLLEY	**11-73**
040	2731217-0100		1	PAPER REEL HOLDER	**8-119, 11-75**
070	2720716-0000		1	LIFTING DEVICE	
080	2514392-0100		1	MACHINE CARRIAGE	**11-77**
090	90031-0300		1	PLC,COMM.CABLE AND ADAPTER	
100	90459-3021		1	INK JET PRINTER A300 HS	
110	90459-0285		1	CD UNIT, 02413-000	
120	1369439-0102		1	PLMS ON-LINE	
0010	*48633-0102*		*1*	*PLMS ON-LINE CLIENT PROGRAM*	
0020	*58789-0000*		*1*	*DOCUMENTATION DISKETT*	
0030	*1369432-0000*		*1*	*LABELS, DISKETT*	
0040	*58787-0000*		*1*	*SHORT FORM INSTRUCTIONS*	
0050	*58788-0000*		*1*	*MASTER DISKETT*	
0020	*48635-0102*		*1*	*PLMS ON-LINE SERVER PROGRAM*	
0020	*58801-0000*		*1*	*DOCUMENTATION DISKETT*	
0030	*1369437-0000*		*1*	*LABELS, DISKETT*	
0040	*58799-0000*		*1*	*SHORT FORM INSTRUCTIONS*	
0050	*58800-0000*		*1*	*MASTER DISKETT*	
0030	*81595-0101*		*1*	*USER MANUAL PLMS ON-LINE*	
0040	*81596-0101*		*1*	*INSTALLATION MANUAL PLMS ON-LINE*	
130	1520633-0002		12	DOLLY	
140	2587326-0000		2	BRACKET	
150	312105-0489		8	SCREW M6S ISO 4017 M10X16 A480	
160	90459-1898		4	LIFTING EYE BOLT, VLBG(1)1.0T M12 TURN.	
170	2756247-0000		8	WASHER	
180	318302-0120		4	EYE BOLT NUT, TYPE, LH, M10	
190	312105-0507		4	SCREW M6S ISO 4014 M10X80 A480	
200	2968251-0000		1	MACHINE SIGN	

Pos	Part No	UN	Qty	Description	Page No

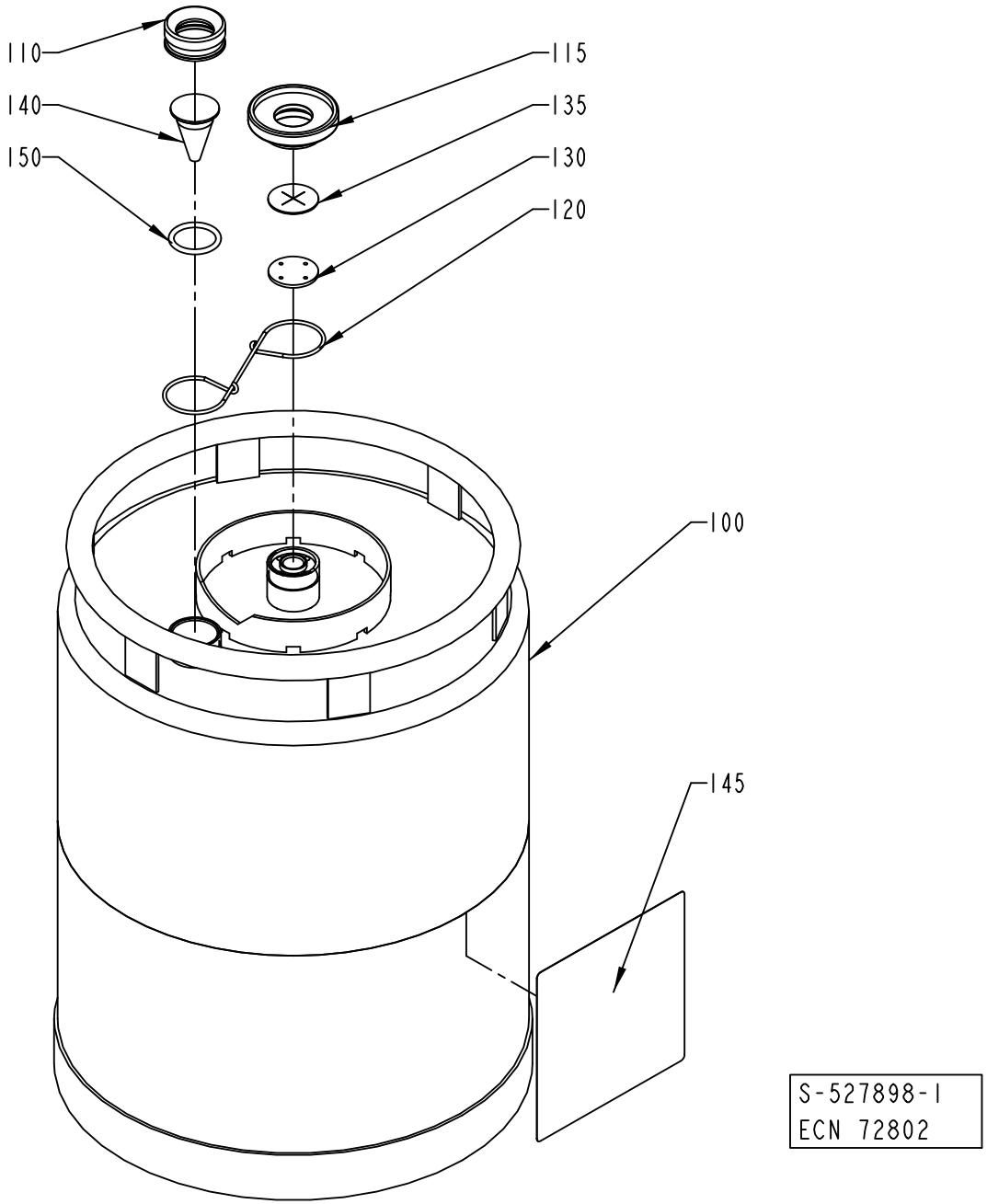
110
140
150
115
135
130
120
100
145
S-527898-1
ECN 72802

ECM: 224840 - 20050831
Group number: 527898-0100
Assembly Drawing: 527898-1_1_AB

Pos	Part No	UN	Qty	Description	Page No
-					
100	561427-0000		1	CONTAINER	
110	273977-0000		1	NUT	
115	273996-0000		1	NUT	
120	273980-0000		1	SPRING	
130	565250-0000		1	WASHER	
135	565251-0000		1	VALVE	
140	273978-0000		1	LEVEL GLAS	
145	532655-0000		1	CAUTION SIGN	
150	927422-0003		1	O.RING 24.2X3 SILICONE	

Pos	Part No	UN	Qty	Description	Page No

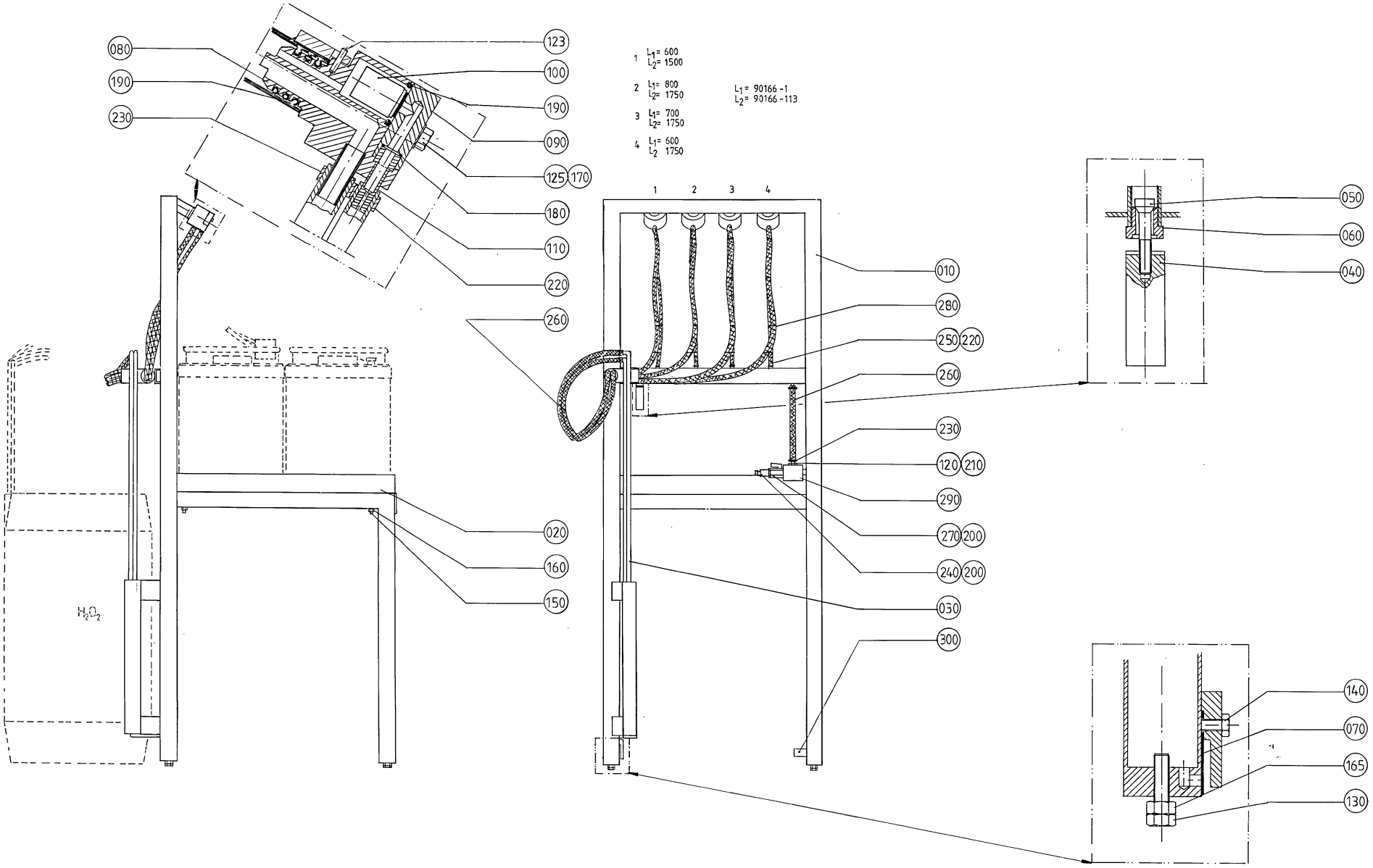
080
190
230
123
100
190
090
125
170
180
110
220
260
020
160
150
H_2O_2
1 L_1= 600 L_2= 1500
2 L_1= 800 L_2= 1750
3 L_1= 700 L_2= 1750
4 L_1= 600 L_2 1750
L_1= 90166-1
L_2= 90166-113
1 2 3 4
010
280
250 220
260
230
120 210
290
270 200
240 200
030
300
050
060
040
140
070
165
130

ECM: 384880 - 20090126
Group number: 529345-0100
Assembly Drawing: 529345-1_1_AA

Pos	Part No	UN	Qty	Description	Page No
-					
010	534692-0000		1	FRAME SECTION	
020	534693-0000		1	PLATE	
030	534694-0000		1	SUCTIONPIPE	
040	534695-0000		1	WEIGHT	
050	534696-0000		1	VALVE	
060	534697-0000		1	VALVE HOUSING	
070	534691-0000		1	DIAPHRAGM	
080	534637-0000		4	ATTACHMENT	
090	534636-0000		4	LEVEL GLAS	
100	534635-0000		4	VALVE	
110	534634-0000		4	PIPE	
120	534698-0000		1	NIPPLE	
123	311103-0235		1	PARALLEL PIN ISO 2338 3M6X14 A1	
125	312105-0374		8	SCREW M6S ISO 4014 M6X30 A480	
130	312105-0455		4	SCREW M6S ISO 4017 M8X30 A480	
140	312125-0327		1	SCREW ISO 1207 M5X12 A4	
150	312145-0380		4	SCREW ISO 2009 MFS M6X50 A4	
160	312812-0316		4	HEXAGON NUT, NY-LOCK M6 A480	
165	312605-0318		4	HEXAGON NUT, M6M M8 A280	
170	315105-0153		8	WASHER BRB 6,4X12 RFR	
180	927421-0005		4	O-RING 7.3X2.4 SILICONE	
190	927422-0001		16	O-RING 19.2X3 SILICONE	
200	315233-0110		2	WASHER CAPTIVE SEALING G1/4	
210	315233-0113		2	WASHER CAPTIVE SEALING G1/2	
220	342991-0100		8	HOSE CLIP,WORM DRIVE TYPE 10-13	
230	342991-0101		10	HOSE CLIP,WORM DRIVE TYPE (13)-16	
240	90163-0007		1	CONNECTION	
250	90166-0045	MM	3500	HOSE PVC TRANSP. 6/12	
260	90166-0113	MM	7500	HOSE	
270	90187-0045		1	BALL VALVE G1/4 CR PL	
280	352113-0102		30	CABLE TIE, BLACK 188X4,8 MM	
290	90425-0016		1	MECMAN TYPE E120 735-120-000	
300	90328-0025		1	SILENCER G1/2"	

Pos	Part No	UN	Qty	Description	Page No

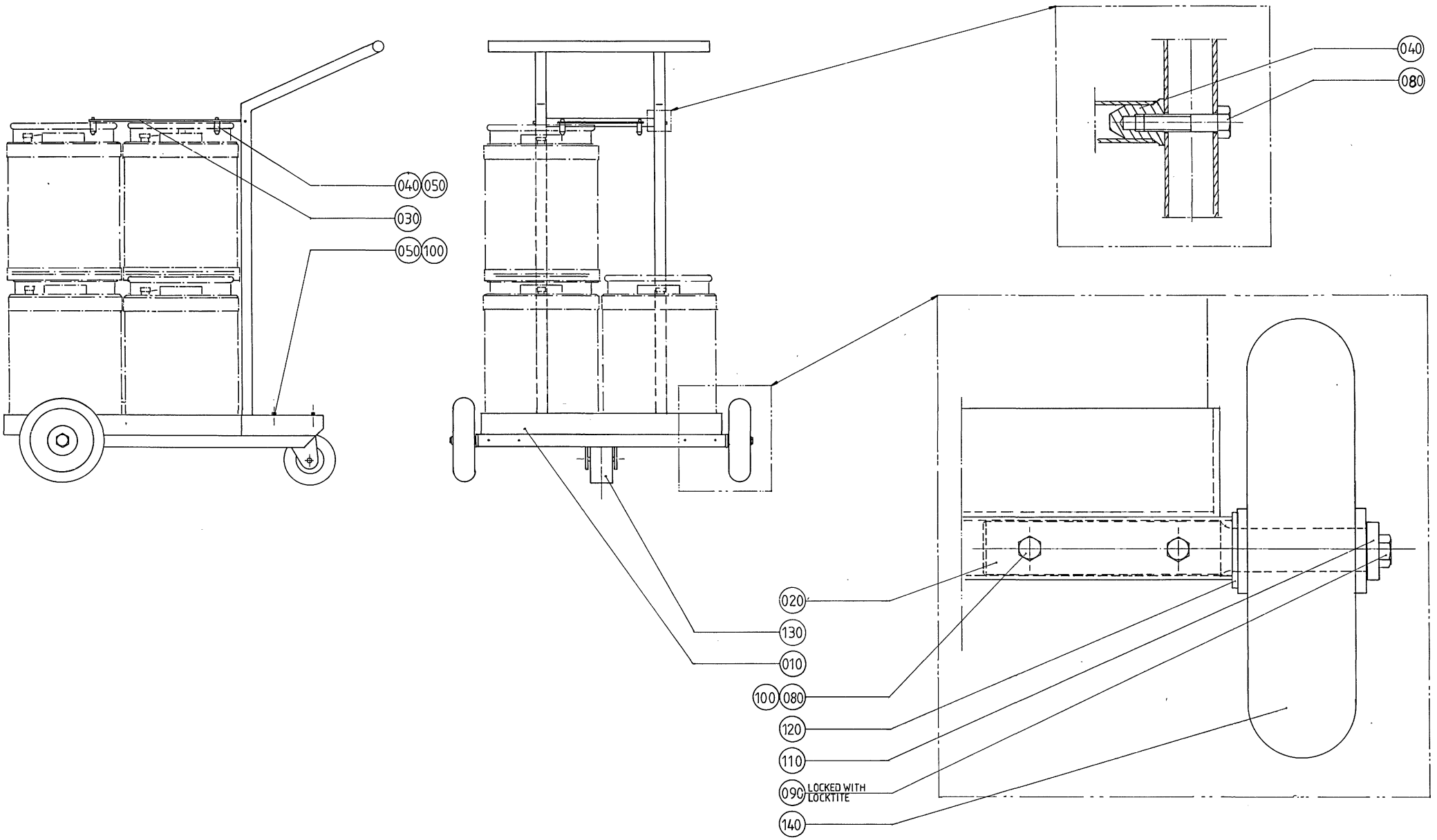
040
050
030
050
100
040
080
020
130
010
100
080
120
110
090
LOCKED WITH LOCKTITE
140

ECM: 384881 - 20090126
Group number: 532210-0100
Assembly Drawing: 532210-1_1_AA

Pos	Part No	UN	Qty	Description	Page No
-					
010	273985-0000		1	CARRIAGE	
020	532208-0000		2	SHAFT	
030	532209-0000		1	SHEET	
040	532211-0000		6	DOWEL	
050	312105-0449		8	SCREW M6S ISO 4017 M8X16 A480	
080	312105-0459		6	SCREW M6S ISO 4014 M8X40 A480	
090	312105-0491		2	SCREW M6S ISO 4017 M10X20 A480	
100	312605-0318		4	HEXAGON NUT, M6M M8 A280	
110	315115-0173		2	WASHER PLAIN, TBRB 10,5/22 H=4	
120	315105-0192		2	WASHER BRB 21X36 RFR	
130	90191-0060		1	CASTOR WHEEL, NO. 1599PRT	
140	90191-0047		2	WHEEL, NO.798 821	

Pos	Part No	UN	Qty	Description	Page No

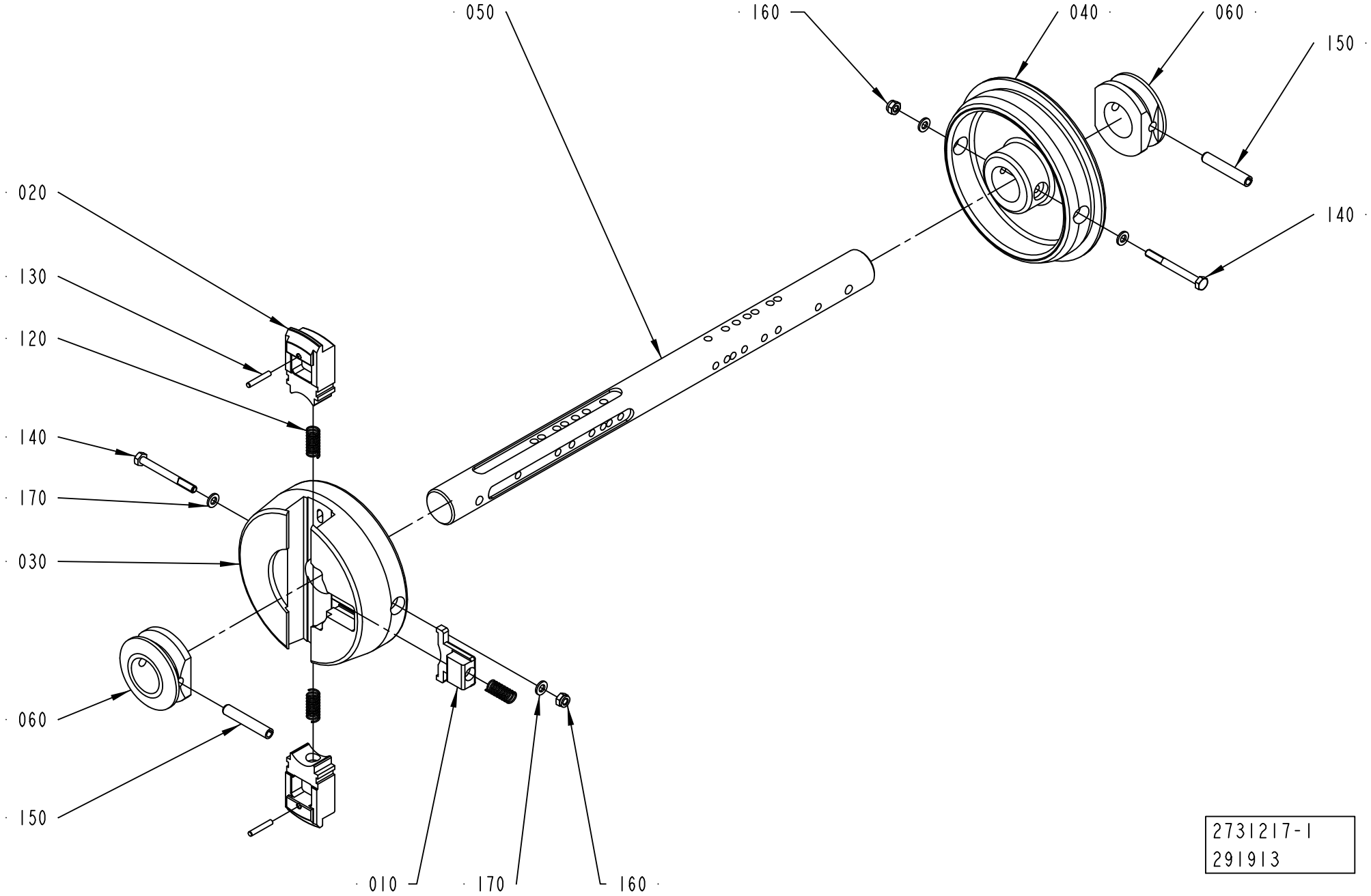
050
160
040
060
150
020
130
120
140
170
030
060
150
140
010
170
160
2731217-1
291913

ECM: 300589 - 20070508
Group number: 2731217-0100
Assembly Drawing: 2731217-1_1_AA

Pos	Part No	UN	Qty	Description	Page No
-					
010	272728-0000		1	BARRIER	
020	2851385-0000		2	PLUNGER	
030	2790925-0000		1	SLEEVE	
040	2731210-0000		1	SLEEVE	
050	2790929-0000		1	SHAFT	
060	2731212-0000		2	RING	
120	90335-0025		3	COMP. SPRING 22010, 1X11X26	
130	311103-0274		2	PARALLEL PIN ISO 2338 4M6X25 A1	
140	312105-0382		2	SCREW M6S ISO 4014 M6X60 A480	
150	311112-0385		2	SPRING PIN, ISO 8752 8X50-C	
160	312812-0316		2	HEXAGON NUT, NY-LOCK M6 A480	
170	315105-0153		4	WASHER BRB 6,4X12 RFR	

Pos	Part No	UN	Qty	Description	Page No

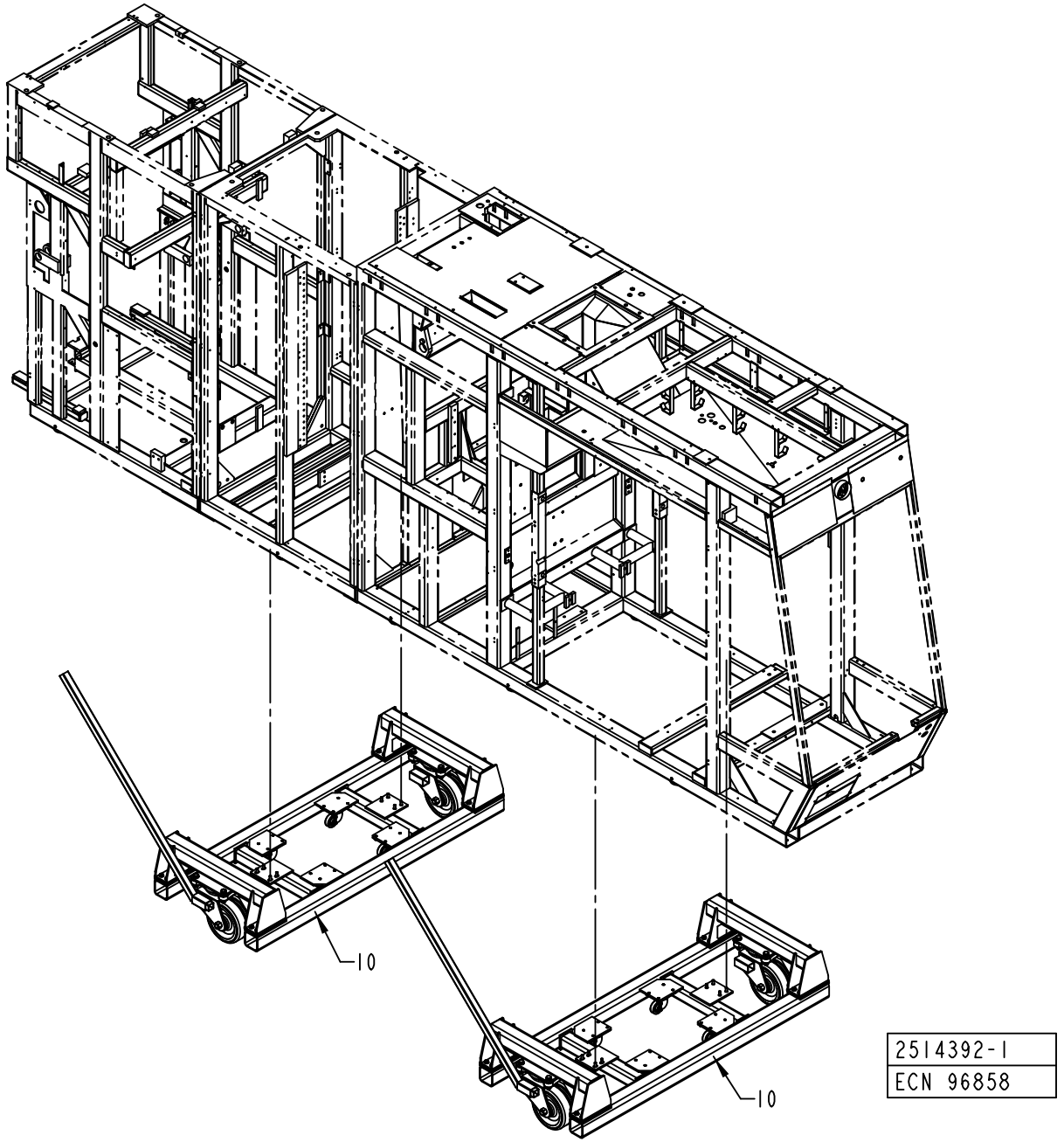
10
10
2514392-1
ECN 96858

ECM: 96863 - 20010830
Group number: 2514392-0100
Assembly Drawing: 2514392-1_1_AA

Pos	Part No	UN	Qty	Description	Page No
-					
0010	582526-0100		2	CARRIAGE	**11-79**

Pos	Part No	UN	Qty	Description	Page No

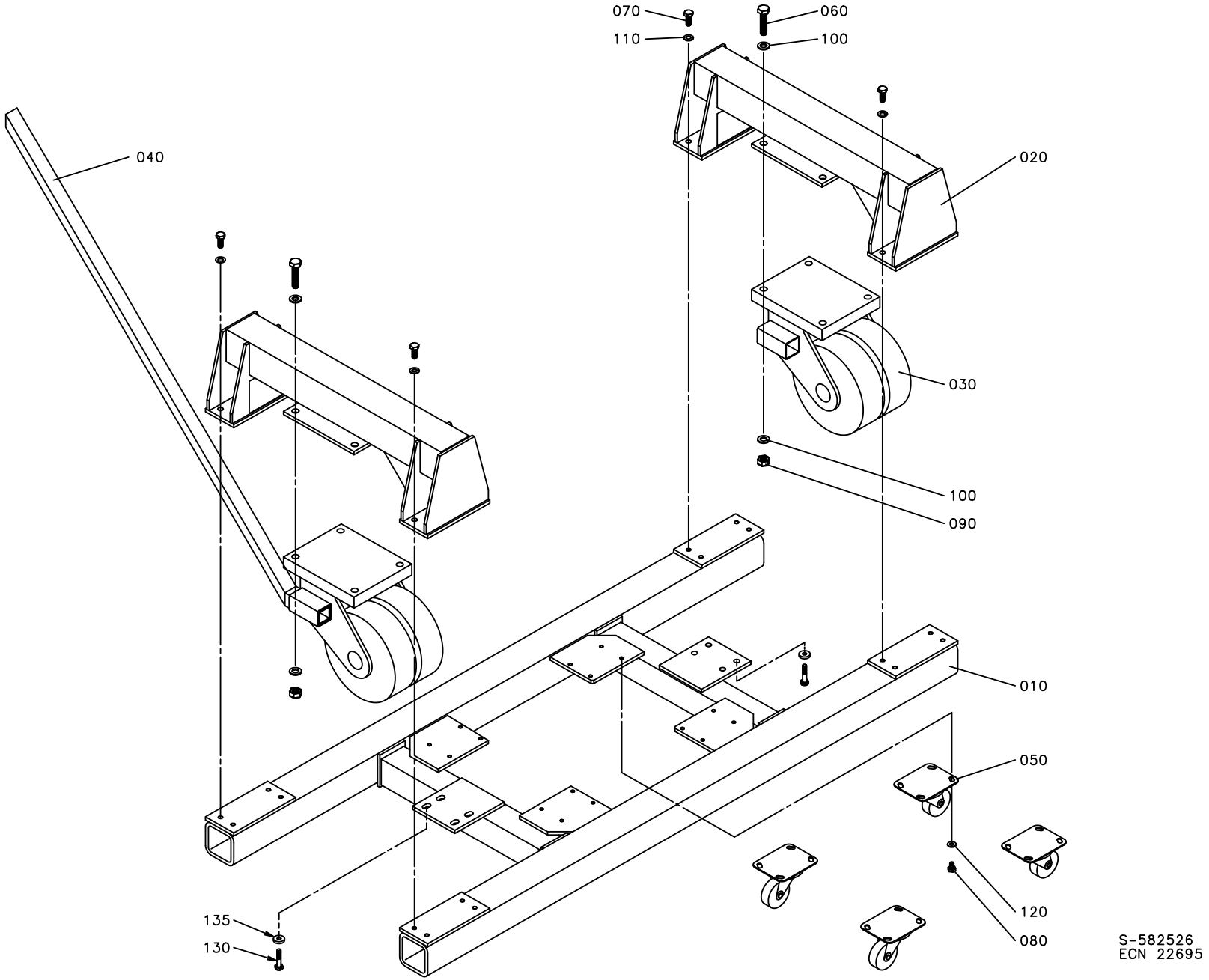
070
110
060
100
040
020
030
100
090
010
050
120
080
135
130
S-582526
ECN 22695

ECM: 384931 - 20090126
Group number: 582526-0100
Assembly Drawing: 582526-1_1_AA

Pos	Part No	UN	Qty	Description	Page No
-					
0010	1140039-0000		1	CONVEYOR FRAME	
0020	1140040-0000		2	BRACKET	
0030	1140840-0000		2	WHEEL	
0040	582527-0000		1	ROD	
0050	90191-0077		4	WHEEL	
0060	312105-0634		8	SCREW M6S ISO 4014 M16X70 A480	
0070	312105-0538		16	SCREW M6S ISO 4017 M12X35 A480	
0080	312105-0489		16	SCREW M6S ISO 4017 M10X16 A480	
0090	312605-0324		8	HEXAGON NUT, M6M M16 A280	
0100	315105-0186		16	WASHER BRB 17X30 RFR	
0110	315105-0178		16	WASHER BRB 13X24 RFR	
0120	315105-0173		16	WASHER BRB 10,5X22 RFR	
0130	312109-0499		8	SCREW M6S ISO 4017 M10X40 A480	
0135	315125-0173		8	WASHER TBRSB 10,5X28X6 A4	

Pos	Part No	UN	Qty	Description	Page No

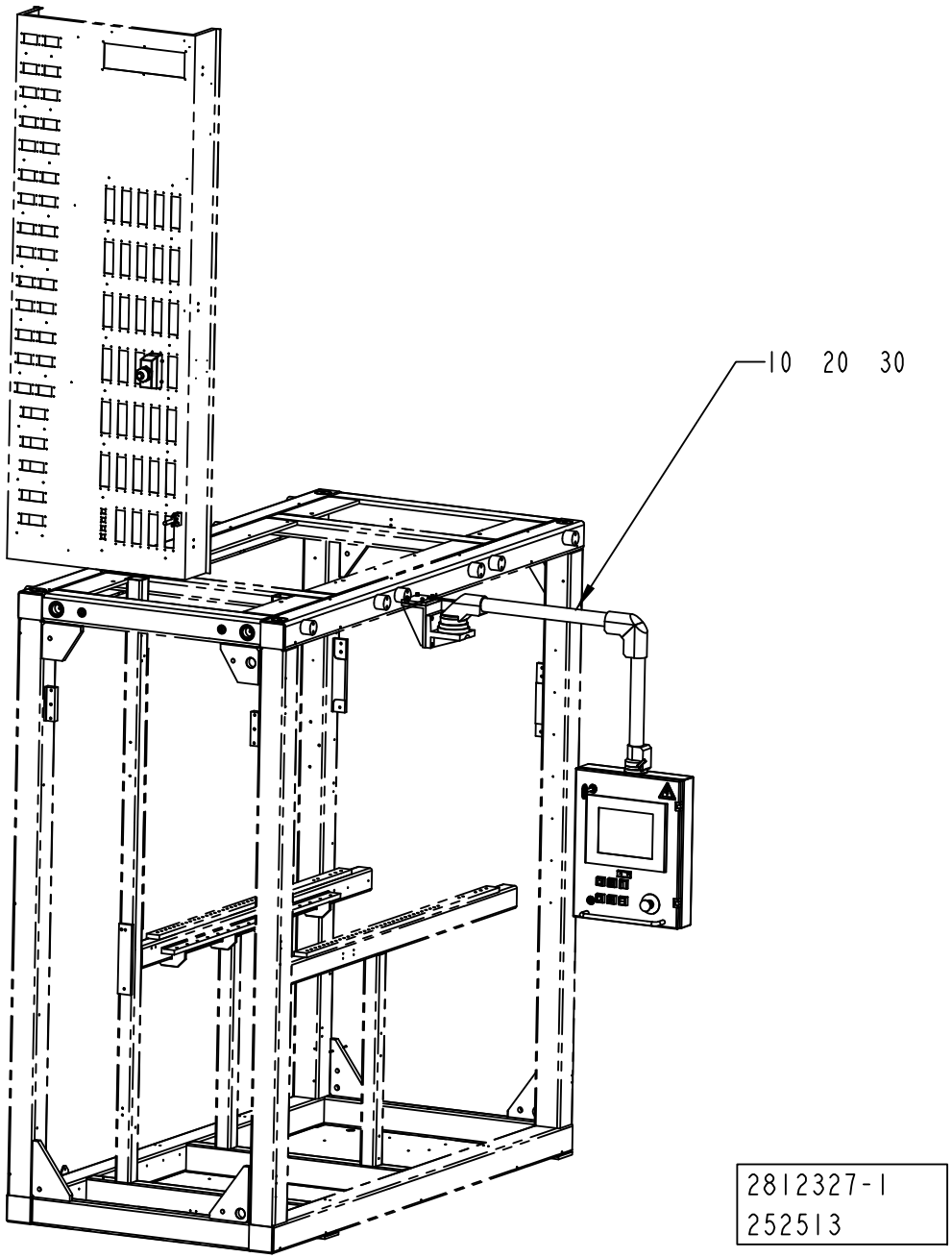
10 20 30
2812327-1
252513

ECM: 316837 - 20070921
Group number: 2812327-0100
Assembly Drawing: 2812327-1_1_AA

Pos	Part No	UN	Qty	Description	Page No
-					
10	2646014-0100		1	CONTROL PANEL	**11-83**
20	2812328-0100		1	CABLE HARNESS	**11-89**
30	2826618-0100		1	SOFTWARE TPOP	**11-91**

Pos	Part No	UN	Qty	Description	Page No

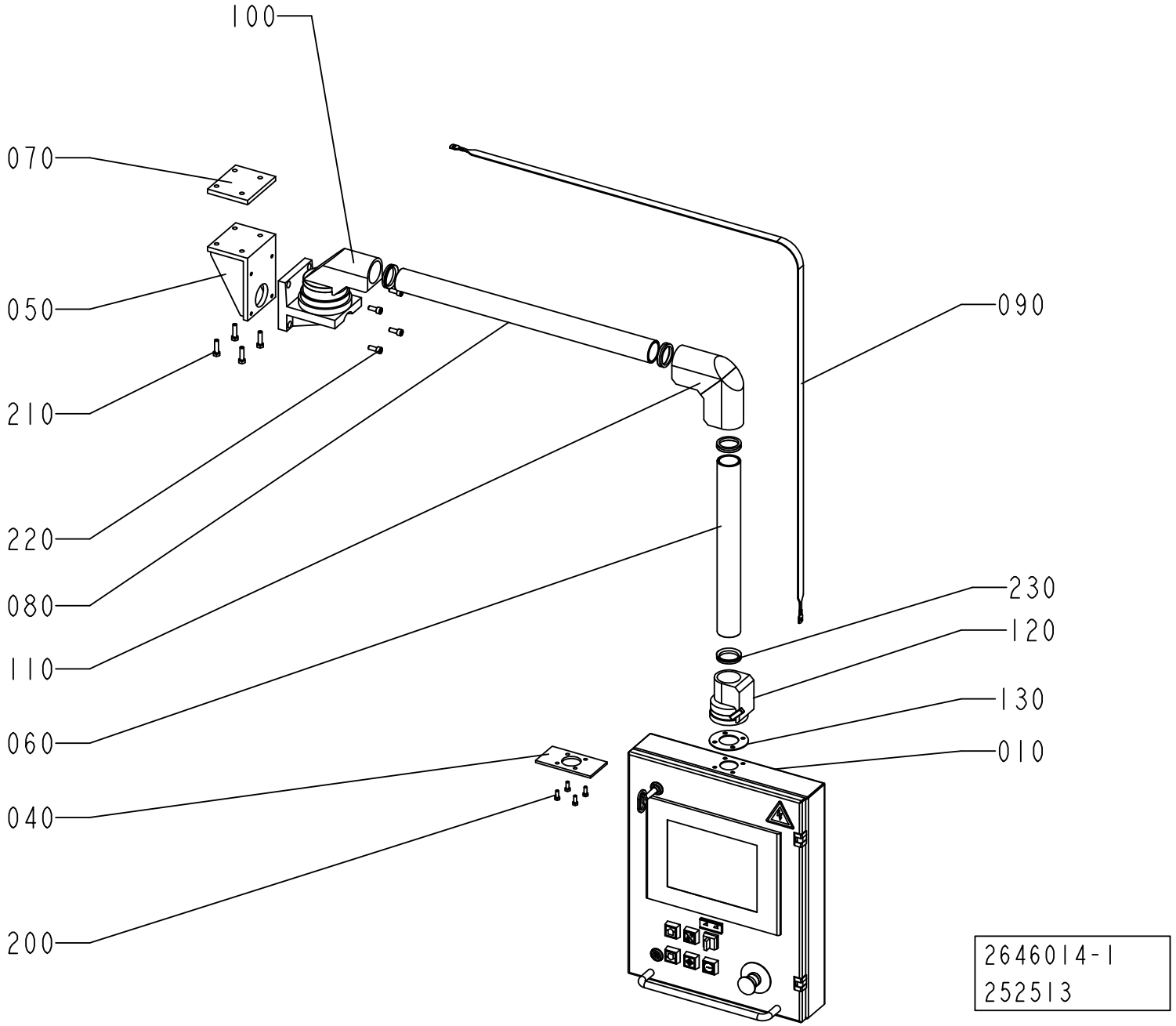
100
070
050
210
220
080
110
060
040
200
090
230
120
130
010
2646014-1
252513

ECM: 252515 - 20060314
Group number: 2646014-0100
Assembly Drawing: 2646014-1_1_AB

Pos	Part No	UN	Qty	Description	Page No
-					
010	2642530-0100		1	CONTROL PANEL	**11-85**
040	1338143-0000		1	DIMCAP, CONTROL PANEL SUPPORT, SHIMS	
050	1528715-0000		1	BRACKET	
060	2523721-0000		1	PIPE	
070	1528747-0000		1	PLATE	
080	1528549-0000		1	PIPE	
090	1367098-0000		1	BRAID	
100	90041-0320		1	WALL BRACKET, 777 000 1101	
110	90458-0162		1	ELBOW GT48/2, NO.49.49 71 00	
120	90458-0163		1	FLANGE COUPLING, GT48/2, NO.49.49 77 00	
130	2815745-0000		1	GASKET	
200	312105-0368		4	SCREW M6S ISO 4017 M6X16 A480	
210	312105-0455		4	SCREW M6S ISO 4017 M8X30 A480	
220	312115-0451		4	SCREW ISO4762 M8X20 A4 80	
230	90091-0138		4	V-RINGS 40X50X9 MM V-45A	

Pos	Part No	UN	Qty	Description	Page No

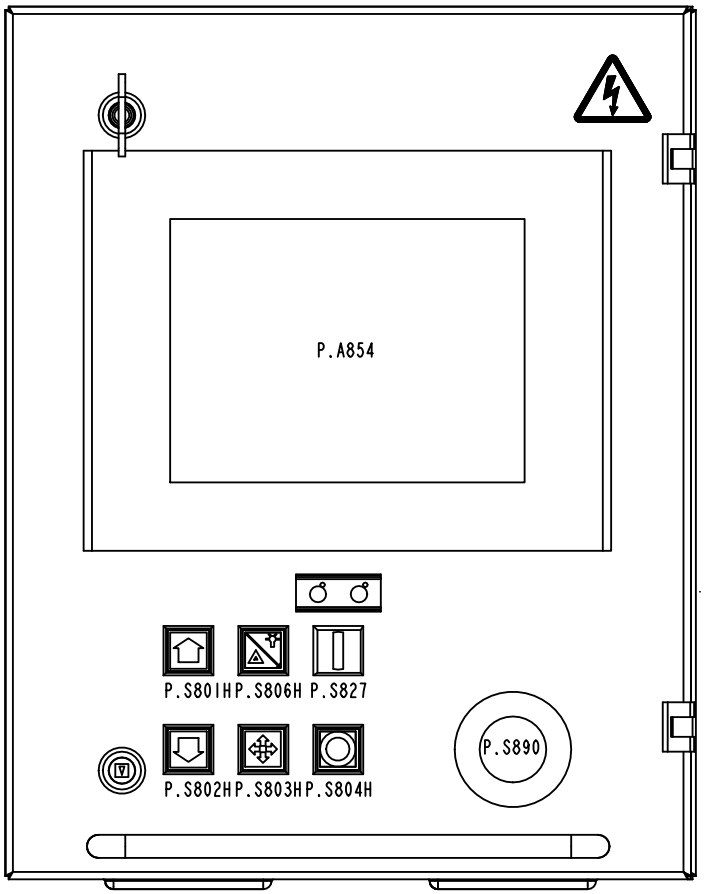
P.A854
P.S801H
P.S806H
P.S827
P.S802H
P.S803H
P.S804H
P.S890

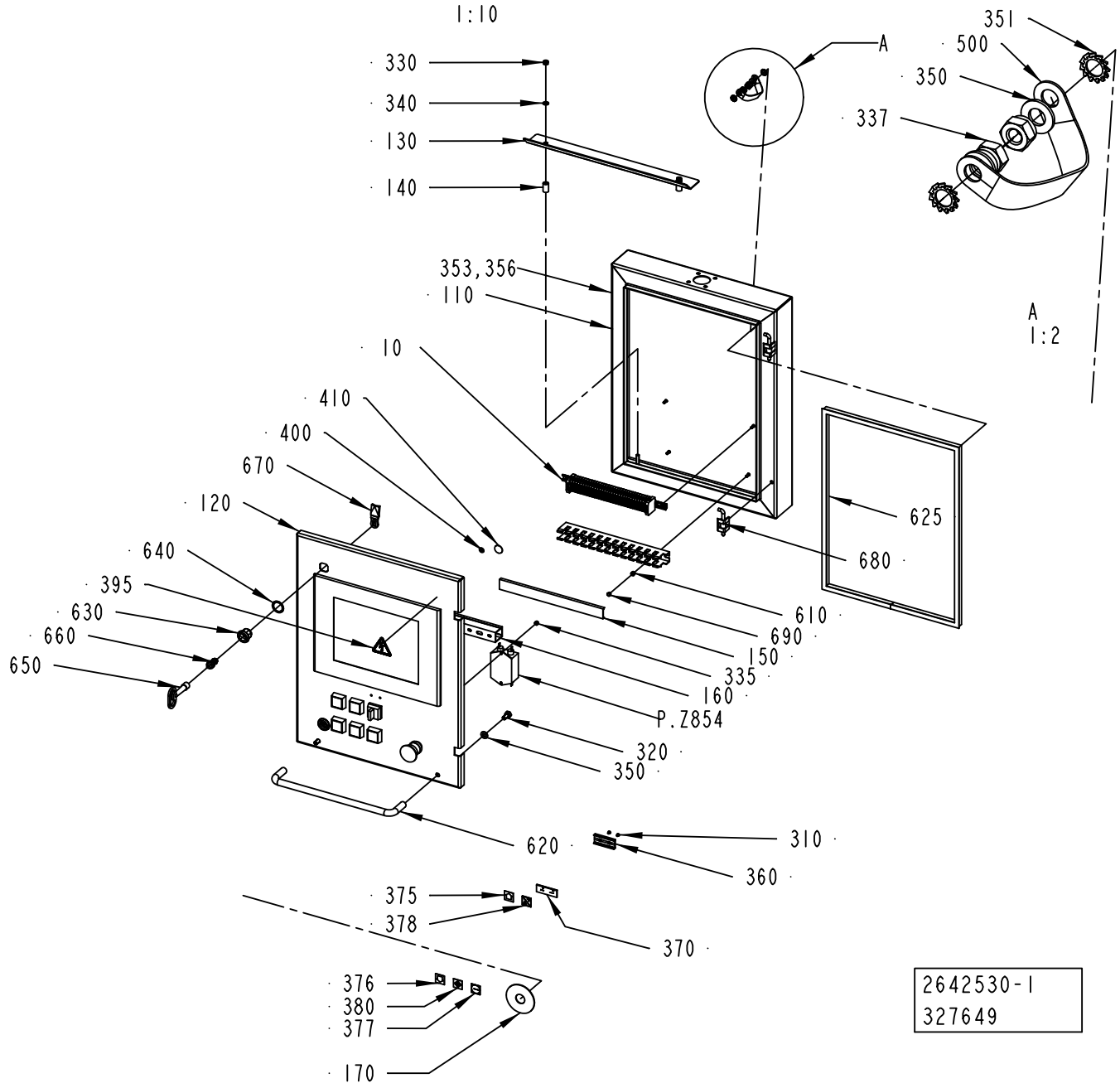
1:10
330
340
130
140
353,356
110
10
410
400
670
120
640
395
630
660
650
A
351
500
350
337
A
1:2
625
680
610
690
150
335
160
P.Z854
320
350
620
310
360
375
378
370
376
380
377
170
2642530-1
327649

ECM: 343911 - 20080402
Group number: 2642530-0100
Assembly Drawing: 2642530-1_1_AD

Pos	Part No	UN	Qty	Description	Page No
-					
010	1369599-0100		1	TERMINAL	**11-87**
110	2642531-0000		1	WELDED CABINET	
120	2642532-0000		1	DOOR	
130	1369672-0000		1	BRACKET	
140	1369673-0000		2	TUBE	
150	1369716-0000		1	CABLE DUCT	
160	1369717-0000		1	CABLE DUCT	
170	486826-0001		1	SIGN "EMERGENCY STOP"	
310	311520-0329		2	RIVET, BLANK 2,4X8	
320	312105-0449		2	SCREW M6S ISO 4017 M8X16 A480	
330	312812-0316		2	HEXAGON NUT, NY-LOCK M6 A480	
335	312812-0312		2	HEXAGON NUT, NY-LOCK M4 A480	
337	312812-0318		2	HEXAGON NUT, NY-LOCK M8 A480	
340	315105-0153		2	WASHER BRB 6,4X12 RFR	
350	315105-0165		4	WASHER BRB 8,4X16 RFR	
351	90062-0016		2	LOCK WASHER SERRAT.EXT.GEAR,8,4/15 H=0,8	
353	351160-0102	M	18	WIRE AWM 1X0,75 MM2 DARKBLUE	
356	351160-0102	M	1	WIRE AWM 1X0,75 MM2 DARKBLUE	
360	359240-0100		1	SIGN HOLDER FOR 359240-0001	
370	907587-0000		1	LABEL	
371	359241-0484		1	SIGN "FILLER/FILLER + PULLTAB"	
375	359301-0001		1	BUTTON SIGN, UP	
376	359301-0005		1	BUTTON SIGN, DOWN	
377	359301-0110		1	BUTTON SIGN, SHORT STOP	
378	359301-0131		1	BUTTON SIGN, LAMP TEST / RESET	
379	359301-0175		1	BUTTON SIGN, PRODUCTION ON	
380	359301-0536		1	SIGN "MANUAL COMMANDS"	
395	359705-0015		1	WARNING SIGN ISO, RISK OF ELECTRIC SHOCK	
400	90194-0163		2	SIGN, EARTH WITHIN CIRCLE	
410	90194-0164		2	SIGN, FRAME/CHASSIS WITHIN CIRCLE	
500	90458-1870		1	EMC EARTH BRAID, 16MM2 L=300MM	
610	90005-0158		4	SPACER 4,3/8, H=5	
620	90017-0015		1	HANDLE, NO. 14.4012.02.308	
625	90143-0057	MM	1562	STRIP EMKA 1011-05 21X11MM	
630	90237-0142		2	LOCK HOUSING, 1000-U45	
640	90237-0322		2	LOCK GASKET, 1000-U137	
650	90237-0324		1	KEY, 1104-02 FOR SQUARE 8 MM	
660	90237-0328		2	LOCK BOLT, 1000-229	
670	90237-0368		2	LOCK CAM, 1000-15	
680	90248-0032		2	HINGE, 1110-U2	
690	90261-0079		4	PLUG, BLIND, PLASTIC, NO. 1955	
P.A854	90459-3957		1	TPOP QPICBDEOOOO	
P.S801H	90064-0083		1	PUSH BUTTON, GREEN	
P.S802H	90064-0082		1	PUSH BUTTON, WHITE	
	90036-0057		*1*	*LIGHT BULB, BA9S 28V*	
P.S803H	90064-0084		1	PUSH BUTTON, YELLOW	
P.S804H	90064-0085		1	PUSH BUTTON, RED	
P.S806H	90064-0082		1	PUSH BUTTON, WHITE	
	90036-0057		*1*	*LIGHT BULB, BA9S 28V*	
P.S827	90111-0120		1	SWITCH, 2 POS.704.510 .0A+704.901.5/A	
P.S834	90458-1651		1	EMERGENCY STOP, ZB4-BS-844 ZB4-BZ-104	
P.S890	90458-1651		1	EMERGENCY STOP, ZB4-BS-844 ZB4-BZ-104	
P.Z854	90458-2381		1	POWER LINE FILTER 5A	

Machine Type	Group Description	Used-In	Group Number	Page No

P.X854

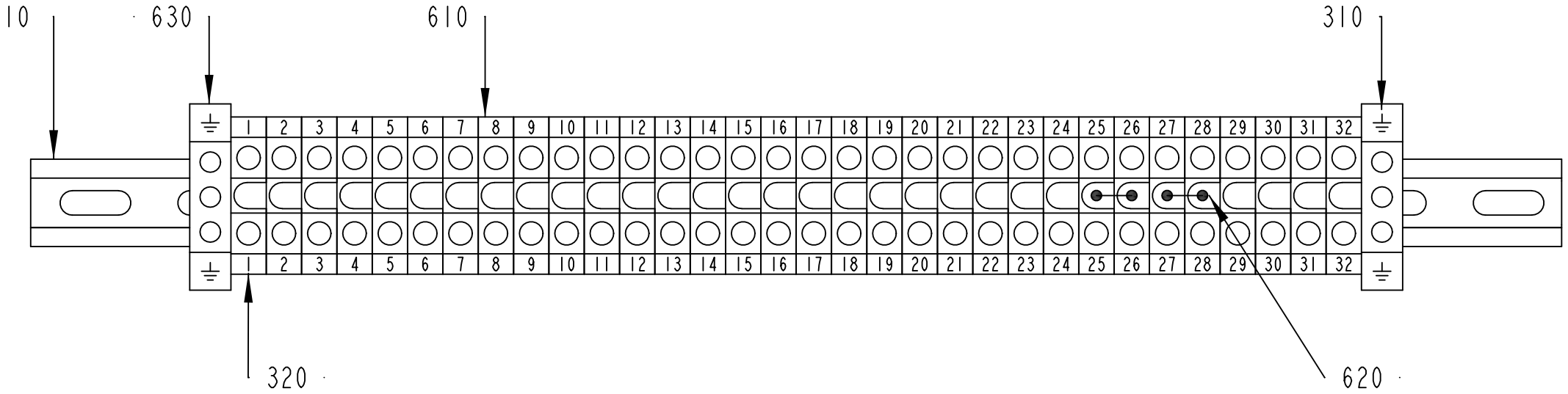

1369599-1
ECN 86049

ECM: 316812 - 20070921
Group number: 1369599-0100
Assembly Drawing: 1369599-1_1_AA

Pos	Part No	UN	Qty	Description	Page No
-					
010	1369706-0000		1	RAIL	
310	359011-0819		1	MARKING PLATES 5-GW (EARTH)	
320	359011-0821		2	SET OF SIGNS 6-FW 1-50	
610	90077-0079		32	FEED THROUGH TERMINAL, 02943.6	
620	353034-0026		2	BRIDGE CONNECTOR, WQV 35/2, 10530.6	
630	90135-0026		2	EARTH TERMINAL, 3802.6	

Pos	Part No	UN	Qty	Description	Page No

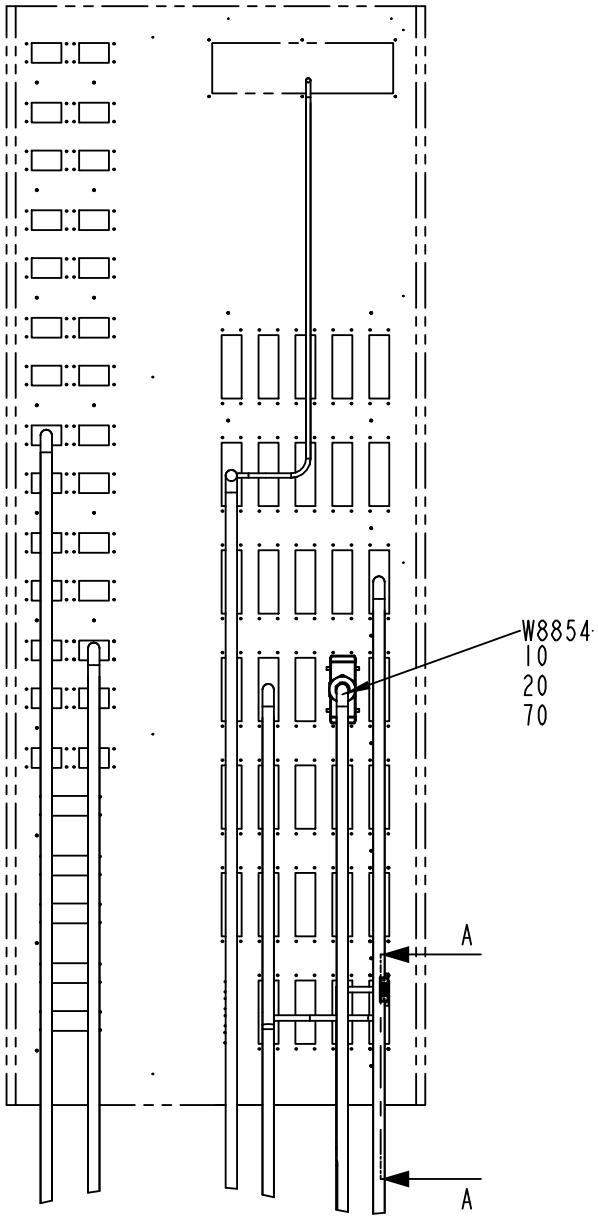

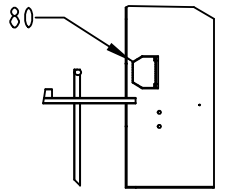

SECTION A-A

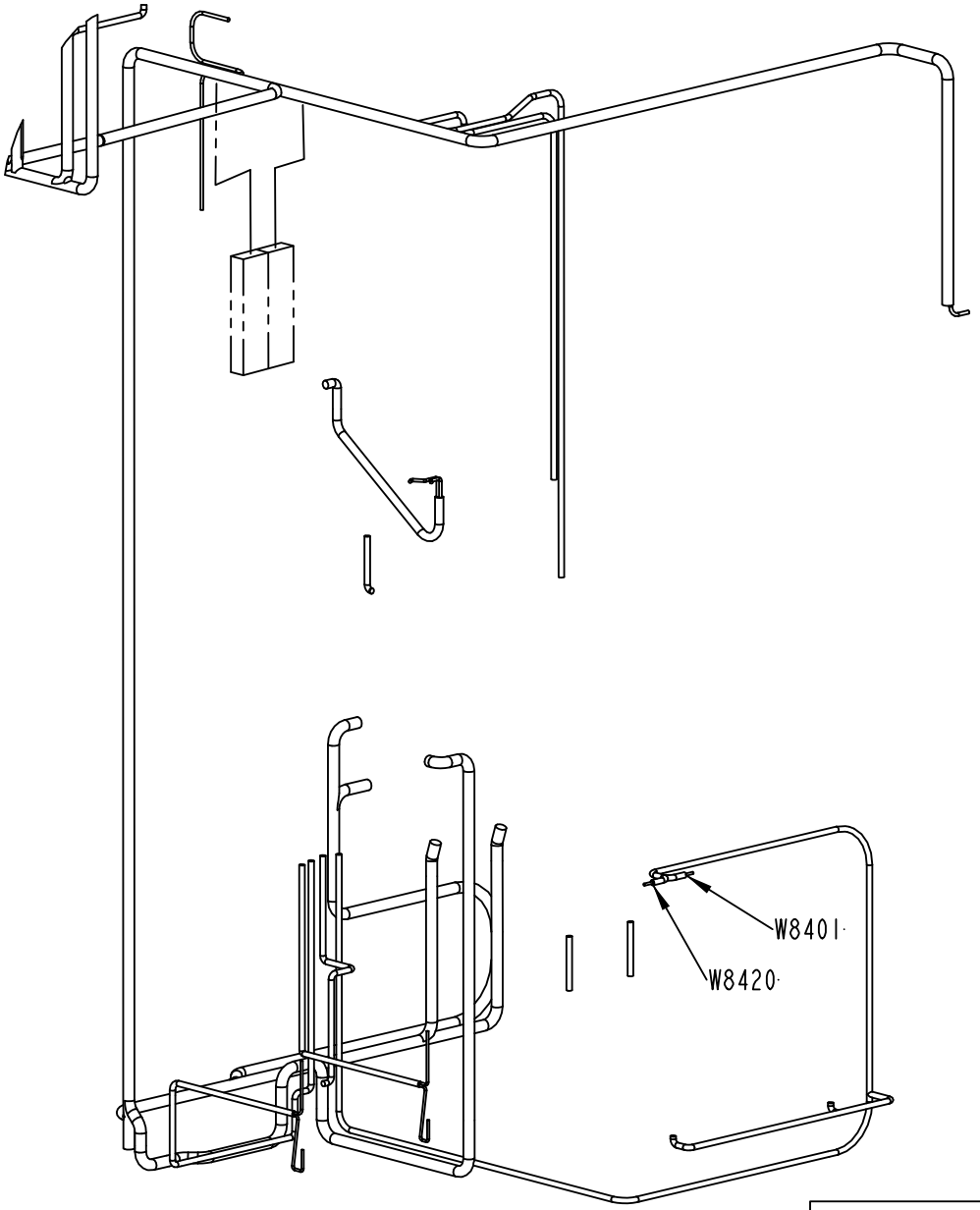

2812328-1
268823

ECM: 316838 - 20070921
Group number: 2812328-0100
Assembly Drawing: 2812328-1_1_AB

Pos	Part No	UN	Qty	Description	Page No
-					
010	90459-7276		1	HOOD 24 B TOP ENTRY, 19 30 024 0428	
020	90458-0310		1	CABLE GLAND, M40X1,5, NO.5311 1050	
070	90110-0150		1	MALE INSERT 121110 0000	
080	2600978-0000		1	CABLE	
	90110-0142		*1*	*PLUG D-SUB 15 MALE, DE15P064TXLF*	
	90110-0143		*1*	*PLUG D-SUB 25 MALE, DB25P064TXLF*	
	90110-0146		*1*	*COVER D-SUB 25, 8655MH2511LF*	
	90121-0116		*2*	*RESISTANCE FIXED, 0,15 KOHM, 0,25 W*	
	90220-0092	*M*	*9*	*PAIR TWISTED CABLE 3X2X0,25MM2*	
	90459-6139		*1*	*HOOD, SUB D TYPE MHDM 15*	
W8401	351150-0403	M	5	CABLE OLFLEX 3X0,75 MM2 LIGHT/GREY	
W8420	351150-0403	M	5	CABLE OLFLEX 3X0,75 MM2 LIGHT/GREY	
W8828	351150-0405	M	7.6	CABLE OLFLEX 5X0,75 MM2 LIGHT/GREY	
W8854	351150-0425	M	6.7	CABLE OLFLEX 25X0,75 MM2 LIGHT/GREY	
W8870	90220-0107	M	9	SCR. CABLE 5X0,75MM2	

Pos	Part No	UN	Qty	Description	Page No

This page is intentionally left blank.

ECM: 328374 - 20080101
Group number: 2826618-0100
Assembly Drawing:

Pos	Part No	UN	Qty	Description	Page No
-					
0010	2825345-0004		1	TPOP CD	

Pos	Part No	UN	Qty	Description	Page No

Tetra Pak

SPC
Spare Parts Catalogue

Part No	Description	Page No
2033-0011	WASHER	1-31, 1-33, 1-39, 1-41, 1-47, 1-49, 1-71, 1-73, 1-75, 1-77, 1-79, 1-87, 1-89, 1-91, 1-93, 1-105, 1-107, 1-109, 1-113, 1-115, 1-123, 1-125, 1-127, 2-95
6278-0000	WASHER	8-99, 8-101
7309-0000	HANDLE	1-419, 1-421
12242-0003	GASKET 48X38X5,5	1-193, 1-195
14600-0000	HOOD	1-245, 1-247, 1-249, 1-251
14729-0000	NUT	4-267, 4-269, 4-271, 4-279, 4-281, 4-283
19972-0000	WASHER	4-7, 4-9, 4-11, 4-17, 4-19, 4-21, 4-51, 4-53, 4-55, 4-57, 4-59, 4-65, 4-67, 4-69, 4-71, 4-73, 4-83, 4-85, 4-89, 4-91
20494-0000	COMPRESSION SPRING	4-261, 4-273
22462-0000	SHAFT	4-165, 4-167, 4-211, 4-213, 4-215, 4-217
22463-0000	ROLL	4-165, 4-167, 4-211, 4-213, 4-215, 4-217
23765-0001	INSULATING PIPE	5-199, 5-201, 5-203, 5-205, 5-207, 5-209
23765-0002	INSULATING PIPE	5-199, 5-201, 5-203, 5-205, 5-207, 5-209
23765-0003	INSULATING PIPE	5-199, 5-201, 5-203, 5-205, 5-207, 5-209
23765-0004	INSULATING PIPE	5-199, 5-201, 5-203, 5-205, 5-207, 5-209
23765-0005	INSULATING PIPE	5-199, 5-201, 5-203, 5-205, 5-207, 5-209
24928-0000	LOCKING RUBBER	1-245, 1-247, 1-249, 1-251
26075-0000	VOLUME BULGE	4-51, 4-53, 4-55, 4-57, 4-59, 4-65, 4-67, 4-69, 4-71, 4-73
28509-0000	WASHER	4-129, 4-131, 4-133, 4-141, 4-187, 4-189, 4-191, 10-9
29876-0000	COVER	1-229
29886-0000	LACE	4-261, 4-273
30298-0000	INSULATION	1-229
31838-0000	PLUNGER	4-261, 4-273
32079-0000	WASHER	4-141
32544-0000	INSULATION NUT	4-129, 4-131, 4-133, 4-141, 4-187, 4-189, 4-191, 10-9
32957-0000	SCREW	4-267, 4-269, 4-271, 4-279, 4-281, 4-283
36753-0000	RING	4-261, 4-273
47937-0411	PLMS OFF-LINE PROGRAM	9-7
67369-0103	RACK WALLMOUNTED 28TE	9-23
67372-0101	BACKPLANE 8TE(32 POLE)	9-23
67379-0101	TRANSFORMER	4-141
67379-0105	TRANSFORMER	4-141
67379-0106	TRANSFORMER	4-141
67379-0114	TRANSFORMER	4-141
67379-0206	TRANSFORMER	4-141
67379-0249	TRANSFORMER	4-141
67379-0269	TRANSFORMER	4-141
67379-0404	TRANSFORMER	1-11
67379-0405	TRANSFORMER	1-11
67379-0407	TRANSFORMER	1-11
67379-0412	TRANSFORMER	1-11
67379-0414	TRANSFORMER	1-11
67379-0417	TRANSFORMER	1-11
67380-0207	TRANSFORMER	8-17
67380-0214	TRANSFORMER	8-17
67388-0102	RACK FRONTMOUNTED 84TE	9-157, 9-161
68262-0101	BACKPLANE FRONT RACK 8TE	9-157, 9-161
68445-0104	FRONT PLATE 8 TE	9-157
68445-0105	FRONT PLATE 10TE	9-157, 9-161
68699-0101	MULTIPLEXER CARD 56LED	8-285
72846-0101	COMPRESSION SPRING	11-5
72887-0000	COMPRESSION SPRING	11-37
72888-0001	SPRING BRACKET	11-37
72888-0002	SPRING BRACKET	11-37
74305-0100	PULLER	11-5
74363-0000	FASTENING PLATE	11-53
74364-0000	EXTRACTOR BOLT	11-53
74365-0000	SCREW	11-53
74655-0000	SHAFT	11-35
76131-0000	ASSEMBLY CONE	11-39
76132-0000	ASSEMBLY TOOL	11-39
78801-0000	CALIBRATION TOOL	11-39
82197-0103	UM DOCUMENT SERIAL COMUNICATION ONLY EN	9-7
82351-0106	USER MANUAL PLMS OFF-LINE	9-7
90001-0033	WALL SOCKET, E1834666	9-149, 9-151
90002-0004	BLANK-OFF PLUG, PR 22,5 SKINDICHT-BLK16	1-327, 1-383, 1-387, 1-389, 1-399, 1-401, 1-407, 1-409, 1-411, 2-103, 7-69, 8-199, 8-201, 9-49, 9-51
90002-0009	BLANK-OFF PLUG, PR 18.6 SKINDICHT-BLK11	1-383, 1-387, 1-389, 1-399, 1-401, 2-103, 2-195, 2-197, 2-199, 2-311, 2-321, 5-333, 6-83, 8-199, 8-201
90002-0010	BLANK-OFF PLUG, PR 37 SKINDICHT-BLK29	1-399, 1-401, 2-103, 8-111, 8-113
90002-0012	BLANK-OFF PLUG, PR 28,3 SKINDICHT-BLK21	1-399, 1-401, 1-407, 1-409, 1-411, 2-103, 2-189, 2-191, 8-199, 8-201
90002-0013	BLANK-OFF PLUG, PR 15,2 SKINDICHT-BLK9	1-259, 1-383, 1-387, 1-389, 1-399, 1-401, 1-407, 1-409, 1-411, 2-53, 2-133, 2-135, 2-137, 2-199, 2-251, 2-253, 7-31, 7-69, 8-199, 8-201
90002-0016	BLANK-OFF PLUG PR 20.4 SKINDICHT-BLK13,5	1-387, 1-389, 1-399, 1-401, 1-407, 1-409, 1-411, 9-49, 9-51
90002-0018	BLANK-OFF PLUG, PR 12,5 SKINDICHT-BLK7	1-399, 1-401
90005-0002	WASHER 16/6,7X1,5	4-27, 4-29, 4-39, 4-41
90005-0060	WASHER PLAIN, RBS 6,4/M6)/18,H=1,5	1-125, 1-127, 1-199, 1-223, 9-49, 9-51
90005-0077	WASHER PL.RND.NYL.8,4/7, H=2	2-339, 9-61, 9-69
90005-0082	WASHER PLAIN ROUND 4,3(M4)/12,H=1	4-51, 4-53, 4-55, 4-57, 4-59, 4-65, 4-67, 4-69, 4-71, 4-73, 4-83, 4-85, 4-89, 4-91, 4-93, 4-95, 4-97, 4-99, 4-101, 4-105, 4-107, 4-111, 8-17, 8-23, 8-135, 8-139, 8-143, 9-87, 9-103

Part No	Description	Page No
90005-0094	GASKET C 19438-EPR	2-293, 6-73
90005-0105	WASHER PLAIN ROUND 8,4(M8)/24, H=1,5	6-59
90005-0116	WASHER PLAIN ROUND 8,4(M8)/24, H=2	8-57, 8-73, 8-77, 8-79, 8-81
90005-0125	WASHER PLAIN ROUND 5,5/22, H=1,5 FZB	4-291, 4-293
90005-0140	WASHER PLAIN ROUND 10,5(M10)/30, H=2	6-13, 6-33
90005-0158	SPACER 4,3/8, H=5	11-85
90012-0049	CABLE GLAND, STR13,5, PR20,4/PG13,5	1-399, 1-401
90012-0063	CABLE GLAND PR 15,2	2-39
90012-0125	GLAND FITTING	2-53, 2-103, 2-195, 2-197, 8-199, 8-201
90012-0126	HOSE GLAND W/O INSERT PG29 NORMAL	1-229
90012-0131	HOSE GLAND W/O INSERT PG21 NORMAL	1-315
90012-0137	GLAND, EXTENDED WITH INSERT, PG11	1-181, 1-183
90015-0020	LEAD-IN, TET5-7, E-1458016	2-9, 2-43, 2-45, 2-153, 2-185, 2-187, 2-189, 2-191, 2-251, 2-253, 4-249, 4-251, 4-253
90015-0021	LEAD-IN, TET10-14, E-1458023	2-55, 2-57, 2-257, 2-259, 8-135
90015-0022	LEAD-IN, TET14-20, E-1458029	2-9
90015-0023	LEAD-IN, TET7-10, E-1458019	2-9, 2-47, 2-161, 2-163, 2-165, 2-185, 2-187, 2-189, 2-191
90015-0024	LEAD-IN, TET20-26, E-1458035	8-135
90015-0025	LEAD-IN, TET26-35, E-1458041	7-11
90015-0037	RUBBER BUSHING	7-27
90017-0015	HANDLE, NO. 14.4012.02.308	9-61, 11-85
90017-0016	HANDLE, NO. 14.4012.02.120	2-273, 2-339, 9-69
90024-0036	FEED THROUGH FILTER, 52-160-002	7-11
90024-0060	FILTER 80 A 440/250 VAC, B84144-A80-R	7-11
90028-0020	CONE TUBE 2,5MM	4-7, 4-9, 4-11, 4-17, 4-19, 4-21, 4-51, 4-53, 4-55, 4-57, 4-59, 4-65, 4-67, 4-69, 4-71, 4-73, 4-83, 4-85, 4-89, 4-91, 4-223, 4-225, 4-227, 4-229, 4-261, 4-263, 4-265, 4-267, 4-269, 4-271, 4-273, 4-275, 4-277, 4-279, 4-281, 4-283, 5-169, 5-171, 6-85
90028-0021	CONE TUBE 4 MM	2-91, 4-261, 4-263, 4-265, 4-267, 4-269, 4-271, 4-273, 4-275, 4-277, 4-279, 4-281, 4-283
90028-0022	CONE TUBE 6 MM	2-89, 2-91, 4-247, 6-85
90028-0024	CONE TUBE 4 MM	4-223, 4-225, 4-263, 4-265, 4-275, 4-277
90028-0025	CONE TUBE 6 MM	4-223, 4-225, 4-263, 4-265, 4-275, 4-277, 5-169, 5-171
90030-0030	CONN. BULKHEAD SV12L71	1-291
90030-0058	CONN. T-PIPE T-12	1-293
90030-0065	PIPE CONNECTION	4-115, 4-117, 4-119, 4-121, 4-175, 4-177, 4-179, 4-181
90030-0067	CONN. BULKHEAD SV 8-L/SY	2-85
90030-0071	CONN. ELBOW WE08LR71	2-35
90030-0088	CONN. STR., 12-R1/4, EXT. THREAD	1-291
90030-0098	ACCESSORIES, FERRULE 8	2-85, 4-299
90030-0106	CONN. PIPE G-12	1-317
90030-0121	CONN. ELBOW ADJ.,INT 10	2-81
90030-0157	CONN. STR. 10-R3/8, EXT. THREAD	2-81
90030-0166	NIPPLE,REDUCING G1/4"-G1/4"	2-239, 2-241
90030-0171	ADJUSTABLE ELBOW CONNECTION, EVW06LR71	2-31
90030-0178	CONN. STR., 10-R1/4, EXT. THREAD	2-83
90030-0180	CONN. STR. GE12L1/2NPT71	1-291, 1-317
90030-0181	CONN. STR. GE12L3/8NPT71	1-235
90030-0184	CONN. STR. GE06LRED71	1-351, 1-387, 1-389, 2-27, 2-63
90030-0185	CONN. STR. GE08LRED71	7-41, 7-43
90030-0187	CONN. STR. GA-12-G3/8	1-293, 1-317, 1-351
90030-0188	CONN. STR. GA-15-G1/2	1-235, 1-291, 1-317, 1-319
90030-0193	CONN. STR. GA-28-G1	1-291
90030-0200	CONN. ELBOW, 6-M10X1, EXT.THREAD	5-169, 5-171, 6-85
90030-0202	CONN. STR., 6-G1/4, EXT. THREAD	1-325, 1-351
90030-0203	ADJUSTABLE ELBOW CONNECTION,EXT 6-G1/4	1-351
90030-0219	CONN. ELBOW BULKHEAD WSV 6	2-91
90030-0223	BUSHING, INT/EXT. G-THREAD NO. 2531	11-57, 11-59
90030-0224	NIPPLES, EXT. THREAD, HEXAGON, NO. 2511	11-57, 11-59
90030-0225	BUSHING, INT/EXT. R-THREAD 1/4X3/8	11-57, 11-59
90030-0257	CONN. ELBOW, 8-R1/8, EXT.THREAD	4-143, 4-145, 4-199, 4-201
90030-0336	CONN. STRAIGHT, 316L-12M-BVCO-3	1-267, 10-29
90030-0338	NUT, PIPE & CONNECTORS, SS-8-BVCO-4	1-267
90030-0340	NIPPLES, EXT. THREAD, HEXAGON, RA-G1/2A3	2-83
90030-0344	CONN. STR., 8-G1/4	2-21
90030-0465	STRAIGHT CONNECTION, MAD DN 15	7-37
90030-0481	REDUCER M12TURM6-316	1-291
90030-0485	CONN. BULKHEAD SV 8-	1-305, 2-37
90030-0567	CONN. STR., 15-R1/2, EXT. THREAD	2-79
90030-0571	CONN. T-PIPE 6	1-285
90031-0051	BASEPLATE, 10-SLOT	9-97, 9-99
90031-0053	BASEPLATE,10-SLOT	9-97, 9-99
90031-0057	PLC, DIGITAL INPUT MODULE	9-97, 9-99
90031-0058	PLC, DIGITAL INPUT MODULE	9-97, 9-99
90031-0059	PLC, DIGITAL OUTPUT MODULE	9-97, 9-99
90031-0060	PLC,ANALOG INPUT MODULE 16 PT/VOLTAGE	9-97, 9-99
90031-0061	PLC,ANALOG INPUT MODULE 16 PT/CURRENT	9-97, 9-99
90031-0062	PLC, ANALOG OUTPUT MODULE 8PT/CURR/VOLT	9-97, 9-99
90031-0065	PLC,TEMPERATUR CONTROL,INPUT MODULE 8 PT	9-97, 9-99
90031-0068	PLC, POWER SUPPLY	9-97, 9-99
90031-0300	PLC,COMM.CABLE AND ADAPTER	11-67
90031-0305	I/O EXPANSION CABLE	9-97, 9-99
90032-0038	BLOCK 2 WAYS	2-91, 4-261, 4-273
90032-0039	BLOCK 4 WAYS	4-223, 4-225, 4-261, 4-263, 4-265, 4-267, 4-269, 4-271, 4-273, 4-275, 4-277, 4-279, 4-281, 4-283

Part No	Description	Page No
90032-0040	BLOCK 6 WAYS	4-267, 4-269, 4-271, 4-279, 4-281, 4-283, 5-169, 5-171
90032-0043	DISTRIBUTION BLOCK 3 WAYS	2-91, 4-263, 4-265, 4-275, 4-277
90032-0046	DISTRIBUTION BLOCK 6 WAYS	2-91
90036-0057	LIGHT BULB, BA9S 28V	10-9
90036-0068	BULB 6.5W 24V	2-219, 8-271
90038-0049	DIODE	1-397
90041-0029	FLOPPY DISC UNIT FD-235HF 1,4MB	9-171
90041-0068	DATACABLE MODEM PC	9-7
90041-0091	PC 2,5" HD BAY, 02330-000	9-171
90041-0320	WALL BRACKET, 777 000 1101	11-83
90042-0170	SOLENOID VALVE BüRKERT	7-9
90042-0171	SOLENOID VALVE BURKERT	1-257
90042-0172	SOLENOID VALVE 4023/1005/1032 24VDC	1-235, 1-319
90042-0203	SOLENOID VALVE BüRKERT	1-263, 1-351
90042-0206	SOLENOID VALVE G1/8, 444-111-000-1	2-25
90042-0215	VALVE BODY 5/2 UNISTABLE	1-369, 1-371, 1-373, 1-377, 1-379, 2-49, 2-171, 2-173, 2-175, 7-77, 8-237, 8-239
90042-0221	VALVE BODY 5/2 BISTABLE	8-237, 8-239
90042-0230	VALVE BODY 5/3 OPEN CENTRE	2-49, 8-235
90042-0248	SOLENOID VALVE OFFICIENE DI ENSINO	2-243, 2-245, 2-247, 2-251, 2-253
90042-0249	SOLENOID VALVE OFFICINE DI ENSINO	7-71, 7-73
90042-0254	SOLENOID DIAPHRAGM VALVE, R1 1/2	7-35
90042-0265	HIGH SPEED VENTING VALVE 583-590-000-1	8-235, 8-237, 8-239
90042-0271	VALVE BODY 2X3/2	1-371, 1-373, 1-377, 1-379, 2-49
90042-0487	COIL 24 VDC/15W, 04983 197 18	2-25
90042-0519	BLANK PLATE ISO SIZE 1	1-369, 1-371, 1-373, 1-377, 1-379, 2-49, 2-171, 2-173, 2-175, 7-77, 8-237, 8-239
90042-0520	BASE PLATE ISO SIZE 1	1-369, 1-371, 1-373, 1-377, 1-379, 2-49, 2-171, 2-173, 2-175, 8-237, 8-239
90042-0522	PORTED END PIECE ISO SIZE 1	1-369, 1-371, 1-373, 1-377, 1-379, 2-49, 2-171, 2-173, 2-175, 7-77, 8-235, 8-237, 8-239
90042-0528	BLANKING KIT SEALS ISO SIZE 1	1-369, 1-371, 1-373, 1-377, 1-379, 2-49, 2-171, 2-173, 2-175, 7-77, 8-237, 8-239
90042-0532	BASE PLATE ISO SIZE 1	1-369, 1-371, 1-373, 1-377, 1-379, 2-49, 2-171, 2-173, 2-175, 7-77, 8-235, 8-237, 8-239
90042-0535	TERMINAL BOARD 19 CORDS	1-369, 1-371, 1-373, 1-377, 1-379, 2-49, 2-171, 2-173, 2-175, 7-77, 8-235, 8-237, 8-239
90042-0538	PILOT VALVE L=500MM	1-369, 1-371, 1-373, 1-377, 1-379, 2-49, 2-171, 2-173, 2-175, 7-77, 8-237, 8-239
90042-0539	PILOT VALVE L=350MM	2-49, 8-235, 8-237, 8-239
90042-0545	SUB-BASE SOFT START ISO 1 AND VDMA 01	8-235, 8-237, 8-239
90042-0550	PROTECTION PLUG FOR UNUSED CONNECTION	7-77
90042-0583	CABLE MECMAN 440-827 000-1	7-79
90042-0585	PILOT VALVE L=5M	7-79, 8-237, 8-239
90042-0591	PILOT VALVE, 04938-333-08	8-237, 8-239
90043-0002	PRESSURE GAUGE, 2040 D=63 MM	1-317
90043-0006	PRESSURE GAUGE, 2041 D=63 MM	7-71, 7-73
90043-0021	PRESSURE GAUGE 0-1 BAR 1/8" D=40	2-47, 11-51, 11-57, 11-59
90043-0043	PRESSURE GAUGE 0-10 BAR 1/8"	7-37, 11-57, 11-59
90043-0064	PRESSURE GAUGE, 2048 D=40 MM	2-161, 2-163, 2-165, 8-237, 8-239
90043-0065	MKC NEW FILL PUMP VACUUM PRESSURE GAUGE	1-367, 1-375, 7-77, 8-237, 8-239
90043-0082	PRESSURE GAUGE, 2740, D=63 MM	1-291
90043-0090	PRESSURE GAUGE, 2048 D=40 MM	2-47, 2-161, 2-163, 2-165
90043-0095	PRESSURE GAUGE, 2740, D=63 MM, GLYC.	1-225
90043-0100	PRESSURE GAUGE, 2948 D=63 MM	7-19
90044-0084	LIMIT SW. 14 CE1-4	1-321, 1-323
90044-0117	PROX.SWITCH IX 0208	5-283
90044-0165	PROX.SWITCH SME-8-K5-LED-24	8-97, 8-127
90044-0192	LIMIT SW. SZ2586.000	9-19, 9-49, 9-51
90044-0194	INDUCTIVE SENSOR IN5329	1-175, 1-177, 1-193, 1-195, 1-265, 1-345, 1-347, 5-211, 5-231, 5-233, 5-235, 5-237, 5-239, 5-241, 5-307, 5-313, 5-315, 8-31, 8-135
90044-0204	KEY SAF.SW. NZIVZ-538-E	2-105, 2-185, 2-187
90044-0310	KEY FOR SAFETY SWITCH AZ 15/16 B1	1-7, 1-9, 1-139, 1-151, 1-153, 1-201, 1-421, 8-135
90045-0162	MOTOR 4G42X25	2-39
90045-0189	STEP MOTOR E22NSLT-LNN-NS-02	2-95
90048-0037	OIL PUMP INCL. CONTAINER 1,5 L	2-89
90051-0035	KNOB, EXTERNAL THREAD. NO. 8308-1135	1-333, 1-335, 1-367, 8-145, 11-29, 11-31
90051-0045	STELLAR KNOB, NO. 8323-257	1-161, 1-163
90051-0082	KNOB, CIRCUL, THREADED BUSH, M6 25X21 MM	8-183, 8-193
90051-0083	KNOB, EXTERNAL THREAD. NO. 8308-1321	8-169
90051-0087	LOCK KNOB, NO. GN 617 A5	8-157, 8-159, 8-183, 8-193
90051-0088	ADJUSTMENT SCREW	8-135
90051-0112	LOCK KNOB, NO. GN 617 NIK5	2-47, 2-161, 2-163, 2-165, 3-19, 3-35
90051-0127	HANDLE, NO. .601/90+X-M10-INOX	6-11, 6-75
90052-0011	HORN HOOTERT 24:48VDC.PT NO.1YA030221	8-45, 8-111, 8-113
90053-0029	COUNTER, F524.800FA3C 24VDC	9-149, 9-151
90055-0033	HOSE NIPPLE, EXT.THR. R1/2-13 MM	2-347
90055-0042	NIPPLES, EXT. THREAD, HEXAGON, NO. 6835-	7-19, 10-49
90055-0051	HOSE NIPPLE, EXT.THR. R3/8X13 MM	2-17, 2-19, 2-21, 2-37, 2-65
90055-0053	HOSE NIPPLE, EXT.THR. R1-25 MM	7-49
90055-0097	STRAIGHT COUPLING	7-81
90055-0100	Y-CONNECTION, 6-6	2-161, 2-163, 2-165
90055-0101	Y-CONNECTION, 8-8	2-47
90055-0118	ELBOW WITH TAILPIECE 8/8 MM	2-161, 2-163, 2-165

Part No	Description	Page No
90055-0132	HOSE NIPPLE, EXT.THR. R1/4X7,8 MM	2-35
90055-0143	HOSE,ELBOW 90 COUPLING,FPT,6X8MM	1-369, 1-371, 1-373, 1-377, 1-379
90055-0145	ELBOW ADAPTOR-R1/4	10-49
90055-0166	HOSE NIPPLE, EXT.THR. R11/2X38 MM	7-35
90055-0172	ELBOW WITH TAILPIECE 8/8 MM	1-369, 2-47, 2-49, 2-155, 2-157, 2-159, 2-161, 2-163, 2-165, 2-171, 2-173, 2-175, 8-237, 8-239
90055-0173	ELBOW WITH TAILPIECE 8/6 MM	2-47, 2-49, 8-235, 8-237, 8-239
90055-0204	ELBOW WITH TAILPIECE 8/8 MM LONG	2-153, 2-161, 2-163, 2-165, 2-239, 2-241, 5-173, 5-175, 5-177
90055-0217	ELBOW PIPE JOINT	2-49, 8-167, 8-185, 8-197
90055-0248	ELBOW WITH TAILPIECE 10/10 MM	2-155, 2-157, 2-159
90055-0249	REDUCER 8-10	7-7
90055-0250	ELBOW WITH TAILPIECE 8/8 MM	7-9
90055-0260	NIPPLE-8 MM G1/4"	7-29
90055-0266	STRAIGHT CONNECTION	2-239, 2-241, 7-9
90055-0267	ELBOW PIPE JOINT,EXT.THREAD,D=8 MM G1/4	2-239, 2-241, 7-9, 7-19
90055-0268	ELBOW WITH TAILPIECE 6/6 MM	2-251, 2-253
90055-0269	ELBOW PIPE JOINT 8X8 MM	2-239, 2-241
90055-0274	STRAIGHT COUPLING, D=8 MM - G1/4"	2-9, 2-239, 2-241, 7-19, 7-27
90055-0276	T-CONNECTION 8 MM	7-7, 7-19, 7-29, 8-167
90055-0277	ELBOW WITH TAILPIECE 12/12 MM	2-257, 2-259
90055-0278	T-COUPLING, ADJ.12-G1/4"	2-47
90062-0015	LOCK WASHER SERRAT.EXT.GEAR,6,4/11 H=0,7	7-11, 8-199, 8-201, 9-49, 9-51, 9-63, 9-65, 9-67, 9-69, 9-105, 9-111, 9-113, 9-123, 9-125, 9-135, 9-137
90062-0016	LOCK WASHER SERRAT.EXT.GEAR,8,4/15 H=0,8	8-111, 8-113, 8-199, 8-201, 11-85
90062-0022	LOCK WASHER D=6,4/11	8-95, 9-77, 9-79, 9-81, 9-83, 9-85, 9-97, 9-99, 9-149, 9-151
90062-0029	LOCK WASHER 5,1X 8,6, T= 1,5 DIN 7980	1-147, 2-81, 7-17
90062-0030	LOCK WASHER 6,1X9,7; T=1,5 DIN 7980	1-147
90062-0031	LOCK WASHER 8,2X12,8; T=2 DIN 7980	1-147
90062-0059	LOCK WASKER SERRAT.EXT.GEAR,4,3/8 H=0,5	8-199, 8-201, 9-77, 9-79, 9-81, 9-83, 9-85
90062-0061	LOCK WASHER NORD-LOCK,6,5/10,8, T=2,2	4-27, 4-29, 4-39, 4-41, 5-145, 5-147, 5-149, 5-309, 5-311, 5-317
90064-0082	PUSH BUTTON, WHITE	2-339, 8-287, 8-289, 8-305, 11-85
90064-0083	PUSH BUTTON, GREEN	11-85
90064-0084	PUSH BUTTON, YELLOW	1-387, 1-389, 2-339, 8-287, 8-289, 11-85
90064-0085	PUSH BUTTON, RED	11-85
90064-0086	PUSH BUTTON, WHITE	2-339
90064-0093	PUSH BUTTON, GREEN	2-339
90064-0098	PUSH BUTTON, CLEAR	2-339
90067-0301	BRAKE WIRE, 32 82 138 1	10-47
90067-0302	TORSION SPRING	10-45
90067-0317	BRAKE LINING	10-45
90067-0320	COTTER FOR 90067-301	10-47
90067-0336	GUIDE SHAFT UNIT, 32 82 123 3	10-45
90067-0337	BRAKE DRUM	10-45
90067-0338	GUIDE ROLLER 32 44 117 2	10-45
90067-0342	TENSION SPRING	10-45
90067-0349	ROLLER KIT, 34 73 050 7	10-47
90067-0350	AXLE PIN	10-47
90067-0351	SEAL KIT	10-51
90067-0354	PUMP PISTON	10-51
90067-0355	COMPRESSION SPRING	10-51
90067-0356	TOP WASHER	10-51
90067-0357	REPAIR KIT	10-51
90067-0358	SINK HANDLE	10-47
90067-0359	SINK ROD, 34 74 021 7	10-47
90067-0360	MOUNTING KIT, 34 74 022 5	10-47
90067-0361	TIE ROD	10-47
90067-0364	BRAKE HANDLE	10-47
90067-0365	HYDRAULIC HOSE, 32 04 169 1	10-43
90067-0368	YOKE	10-43
90067-0369	VALVE ARM	10-51
90067-0370	WHEEL, 32 04 176 6	10-43
90067-0371	SLEEVE, 32 04 175 8	10-43
90067-0372	SHAFT, 32 04 174 1	10-43
90068-0312	CLAMPING PIECE, T 12 / 12	10-5
90070-0017	WORKING HOURS COUNTER, 7991 DR H?NLE	9-149, 9-151
90074-0011	CABLE CLIPS, D=14 MM	9-49, 9-51, 9-173
90075-0141	CONTACTOR, 4KW 24VDC	9-77, 9-79, 9-81, 9-83, 9-85
90077-0079	FEED THROUGH TERMINAL, 02943.6	2-311, 2-321, 2-341, 5-333, 6-83, 11-87
90077-0113	FEED THROUGH TERMINAL, 10-00102150-1	2-103, 2-195, 2-197, 2-199, 9-95
90077-0328	RAIL TS15/5	2-311, 2-321, 2-341, 5-333, 6-83
90082-0013	OVER VOLT. PROTECT. PU 4C-R 230 VAC	7-11
90083-0052	NEEDLE ROLLER THRUST BEARING, 30X47X2 MM	5-283
90083-0053	SHAFT LOCATING WASHER, 30X47X1MM	5-283
90087-0019	PLUG M10X1 STAINLESS	2-91, 3-17, 4-223, 4-225, 4-261, 4-263, 4-265, 4-273, 4-275, 4-277, 5-169, 5-171, 6-85
90087-0036	PLUG, KR 1/4	7-77
90089-0003	REDUCING SLEEVE, PR22,5/PR18,6	1-181, 1-183
90089-0015	REDUCING SLEEVE, PR37M/PR28,3F	1-399, 1-401
90089-0029	ENLARGING SLEEVE	1-399, 1-401
90091-0055	RADIAL SEAL 80X100X10 MM	6-17
90091-0056	RADIAL SEAL 70X100X10 MM	6-33
90091-0058	RADIAL SEAL 120X150X12 MM	6-17, 6-25, 6-27, 6-51, 6-53

Part No	Description	Page No
90091-0074	WEAR RING 35X40X5,3 MM	4-127
90091-0138	V-RINGS 40X50X9 MM V-45A	4-291, 4-293, 11-83
90091-0148	RADIAL SEAL 25X47X7 MM DUST LIP	5-213, 5-215, 5-217, 5-219, 5-221, 5-223, 5-287
90091-0237	ROD SEAL, GLIDORING 20X27,5X3 MM	1-269, 1-271, 1-273, 10-29, 10-31
90091-0238	WEAR RING 20X22X10 MM	1-269, 1-271, 1-273, 10-29, 10-31
90091-0266	SEAL RING 10,4X16,3X2,5 MM	1-267, 10-27
90091-0297	RADIAL SEAL 35X47X7 MM DUST LIP	5-5, 5-7, 5-169, 5-171, 5-231, 5-233, 5-235, 5-237, 5-239, 5-241, 5-307, 5-313, 5-315
90091-0298	RADIAL SEAL 45X65X8 MM DUST LIP	5-231, 5-233, 5-235, 5-237, 5-239, 5-241
90091-0299	RADIAL SEAL 30X52X7 MM DUST LIP	5-5, 5-7, 5-225, 5-227, 5-229, 5-287
90091-0304	RADIAL SEAL 45X65X8 MM DUST LIP	10-31
90091-0306	RADIAL SEAL 30X47X7 MM DUST LIP	5-213, 5-215, 5-217, 5-219, 5-221, 5-223
90091-0335	PISTON SEAL GLIDE RING 62,5X70X3 MM	1-271, 10-31
90091-0336	PISTON SEAL GLIDE RING 79X90X4 MM	1-269, 1-273
90091-0359	X-SEAL 36,17X2,62 MM	4-127
90091-0360	BACK-UP RING 37,5X1,4 MM	4-127
90091-0361	SCRAPER, EXCLUDER2 30X34,8X3,7 MM	4-155, 4-157, 4-159, 4-161
90091-0362	SCRAPER, EXCLUDER2 18X22,8X3,7 MM	4-127
90091-0364	ROD SEAL, STEPSEAL 18X25,3X3,2 MM	4-127
90091-0366	WEAR RING 18X23X3.9	4-127
90091-0368	WEAR RING 30X45X5,3 MM	4-127
90091-0377	ASSEMBLY TOOL SLEEVE GLYD RING	11-39
90091-0378	ASSEMBLY TOOL SLEEVE AQ-SEAL	11-39
90091-0380	SCRAPER, EXCLUDER 20X24,8X3,7 MM	5-231, 5-233, 5-235, 5-237, 5-239, 5-241
90091-0387	ASSEMBLY TOOL	11-39
90091-0391	SEAL SLYDRING	4-127
90091-0398	PISTON SEAL GLIDE RING T 20,5X28X3,2 MM	4-127
90091-0404	RADIAL SEAL 22X40X7 MM DUST LIP	5-287
90091-0408	BEARING SEAL 70X78X5 MM	5-231, 5-233, 5-235, 5-237, 5-239, 5-241
90091-0412	SEAL RING	2-31
90091-0416	RADIAL SEAL 70X90X10 MM DUST LIP	5-283
90091-0428	PISTON SEAL GLIDE RING T 27,5X34,5X3,2 M	4-127
90091-0429	VARILIP 15X26X7 MM	1-199
90091-0436	RADIAL SEAL 20X40X7 MM DUST LIP	4-291, 4-293
90091-0440	RADIAL SEAL 22X40X7 MM DUST LIP	5-307, 5-313, 5-315
90092-0052	METERING VALVE 10 MM3	4-223, 4-225, 4-261, 4-263, 4-265, 4-267, 4-269, 4-271, 4-273, 4-275, 4-277, 4-279, 4-281, 4-283, 5-169, 5-171, 6-85
90092-0053	METERING VALVE 30 MM3	2-91, 3-17
90092-0054	METERING VALVE 50 MM3	4-261, 4-267, 4-269, 4-271, 4-273, 4-279, 4-281, 4-283, 5-169, 5-171, 6-85
90099-0007	HEXAGON NUT, M10X1, E 63 137 10	8-157, 8-159
90099-0027	HEXAGON NUT, M14, DIN936	1-175, 1-177
90099-0051	NUT HEX. M10X1,25, FE FZB	1-227
90099-0053	HEXAGON NUT, M14X1,5, SMS2176	1-213
90099-0085	NUT	7-11
90099-0095	NUT HEX. M18X1,5	1-155, 1-157
90099-0096	NUT	7-11
90099-0104	NUT, PR 15,2 (PG9)	1-15, 1-17, 1-221, 1-223, 1-225, 1-229, 1-231, 1-255, 1-265, 1-285, 1-311, 1-315, 1-321, 1-323, 1-345, 1-347, 1-351, 1-399, 1-401, 1-407, 1-409, 1-411, 1-413, 2-37, 2-91, 2-133, 2-135, 2-137, 2-251, 2-253, 7-19, 8-65, 8-67, 8-69, 8-71, 8-199, 8-201
90099-0110	NUT, PR 22,5 (PG16)	1-207, 1-285, 1-399, 1-401, 1-407, 1-409, 1-411, 1-413, 2-133, 2-135, 2-137, 2-189, 2-191, 8-199, 8-201, 8-305, 9-49, 9-51
90099-0116	NUT, PR 12,5 (PG7)	1-399, 1-401
90099-0117	NUT, PR 18,6 (PG11)	1-309, 1-315, 1-367, 1-375, 1-399, 1-401, 1-413, 7-11, 8-199, 8-201
90099-0118	NUT, PR 20,4 (PG13,5)	1-21, 1-399, 1-401, 1-407, 1-409, 1-411, 1-413, 2-189, 2-191, 5-329, 6-79, 8-45, 8-199, 8-201, 9-49, 9-51
90099-0119	NUT, PR 28,3 (PG21)	1-399, 1-401, 1-407, 1-409, 1-411, 1-413, 8-177, 8-199, 8-201
90099-0120	NUT, PR 37 (PG29)	1-333, 1-335, 1-399, 1-401, 2-185, 2-187, 2-189, 2-191, 8-177, 8-199, 8-201
90099-0131	NUT HEX. M16X2 SS	2-91, 8-135
90110-0028	CONTACT UNIT 4-POLEADAPTER	9-149, 9-151
90110-0052	MALE INSERT HAN 6E 09 33 006 2601	9-55
90110-0055	FEMALE INSERT HAN 6 HSB 09 31 006 2701	9-71, 9-73
90110-0056	MALE INSERT HAN 24 E 09 33 024 2601	9-21
90110-0057	FEMALE INSERT HAN 24 E 09 33 002 4201	9-21, 9-55, 9-57
90110-0095	CONNECTOR 3 POLE + EARTH	1-257, 2-25, 2-83, 7-71, 7-73
90110-0123	HOUSING, 09 30 006 0301	9-19, 9-55, 9-71, 9-73
90110-0141	PLUG D-SUB 9 MALE, DE09P064TXLF	8-285
90110-0144	COVER D-SUB 9, 8655MH0911LF	8-281, 8-283
90110-0147	PLUG D-SUB 9 FEMALE, DE09S064TLF	8-281, 8-283
90110-0150	MALE INSERT 121110 0000	1-259, 1-399, 1-401, 2-55, 2-57, 2-99, 2-101, 2-117, 2-119, 2-185, 2-187, 2-189, 2-191, 7-69, 8-199, 8-201, 11-89
90110-0151	FEMALE INSERT 24-POL 121130 0000	2-99, 2-101, 2-185, 2-187, 2-189, 2-191
90110-0152	CABLE HOOD 24-POL 70.352.2428.1	1-259, 1-399, 1-401, 2-55, 2-57, 2-117, 2-119, 2-185, 2-187, 2-189, 2-191, 8-199, 8-201
90110-0156	MALE INSERT 70.210.0653.0	1-399, 1-401, 2-117, 2-119, 7-41, 7-43, 8-199, 8-201
90110-0157	CABLE HOOD 6-POL 70.352.0628.1	1-259, 1-399, 1-401, 2-55, 2-57, 2-117, 2-119, 2-185, 2-187, 2-189, 2-191, 8-177, 8-199, 8-201, 8-247
90110-0159	MALE INSERT 70.310.0640.0	1-259, 1-399, 1-401, 2-55, 2-57, 2-117, 2-119, 2-185, 2-187, 2-189, 2-191, 7-17, 7-27, 7-31, 8-177, 8-199, 8-201, 8-247
90110-0160	CABLE HOOD 6-16-POL 70.352.1628.1	1-399, 1-401, 8-199, 8-201
90110-0163	FEMALE INSERT 70 300 0640 0	2-99, 2-101, 2-185, 2-187
90110-0221	CHASSIS HOUSING 310162-33	2-99, 2-101, 2-185, 2-187
90110-0224	CHASSIS HOUSING 310166-33	2-99, 2-101
90110-0225	CHASSIS HOUSING 310168-33	2-99, 2-101

Part No	Description	Page No
90110-0226	CABLE HOOD 6-POL 70.350.0628.0	7-17, 7-27, 7-31
90110-0227	CABLE HOOD 6-16-POL 71.350.1628.0	7-41, 7-43
90110-0228	CABLE HOOD 24-POL 71.350.2428.0	2-99, 2-101, 2-185, 2-187, 2-189, 2-191, 7-69
90110-0235	CABLE CONTACT, PX0739/P	1-399, 1-401, 2-117, 2-119, 8-177
90110-0236	CHASSIS CONTACT PX0767/S	9-71, 9-73
90110-0244	CABLE HOOD 6-POL 70.350.1628.0	2-117, 2-119
90110-0247	FEMALE INSERT 70.200.0653.0	2-99, 2-101
90110-0296	FEMALE INSERT HDC-HA-4BS 149840-B/2	2-117, 2-119, 2-185, 2-187, 9-19
90110-0370	BASE HOUSING	2-117, 2-119, 2-185, 2-187
90110-0371	COVER, HDC-HA-3-TOVL1/11165247-A/1	2-311, 2-321
90110-0381	COVER, 310601-33 CYR24.4	1-399, 1-401, 2-117, 2-119, 2-185, 2-187, 2-189, 2-191, 9-71, 9-73
90110-0383	CONTACT COVER 15 PIN, SUB-D SUBCON	9-9
90110-0385	MARKING HOLDER, 4.242.385310	1-399, 1-401, 2-55, 2-57, 2-117, 2-119, 2-189, 2-191, 8-199, 8-201
90110-0513	CHASSIS HOUSING, CHP 24L S2	2-185, 2-187, 2-189, 2-191
90110-0518	CONNECTOR D-SUB, SUBCON 15/M-SH	9-9
90111-0120	SWITCH, 2 POS.704.510 .0A+704.901.5/A	2-339, 8-279, 8-301, 11-85
90111-0122	KEY SWITCH, 2 NO CONTACTS	9-149, 9-151
90111-0124	KEY SWITCH, 1NO,1NC CONTACT	9-149, 9-151
90113-0056	REGULATOR, 11-818-998	2-47, 11-51
90113-0059	FILTER REGULATOR 50UM, B08-396-A3MG	11-57, 11-59
90113-0064	PRESSURE REGULATOR	1-291
90113-0072	FILTER REGULATOR 40µ, 915-331242	7-79
90113-0098	PRESSURE REGULATOR	7-37
90113-0140	QUICK CLAMP	1-367, 1-375, 2-161, 2-163, 2-165
90113-0374	SLOW STARTING VALVE	7-79
90113-0375	PRESSURE DISTRIBUTION	7-79
90113-0377	SHUT OFF VALVE G1/2, 915-331053	7-79
90113-0384	BRACKET FOR R11, 5203-06	11-57, 11-59
90113-0423	HIGH SPEED VENTING VALVE G1/2, R40403053	7-79
90113-0469	MANIFOLD REGULATOR 4 BAR	1-367, 1-375, 2-161, 2-163, 2-165
90113-0470	MANIFOLD REGULATOR 10 BAR	1-367, 7-77, 8-237, 8-239
90113-0472	FILTER 0,01 MICRON, F72C-2GD-AEO	1-375
90115-0020	ROD END, ID=8 MM, M8X1,25	5-21, 5-23
90115-0021	ROD END, ID=8 MM, M8X1,25 LH	5-21, 5-23
90115-0134	ROD END, ID=10 MM, M10X1,25	2-297, 5-115, 5-117, 5-119
90115-0137	ROD END, ID=6 MM, M6X1	5-35, 5-37, 5-39, 5-95, 5-97
90115-0139	ROD END, ID=8 MM, M8X1,25	2-143, 5-13, 5-15
90115-0180	ROD END, ID=8 MM, M8X1,25 LH	5-13, 5-15
90115-0181	ROD END, ID=10 MM M10X1,5	5-5, 5-7
90115-0182	ROD END, ID=10 MM M10X1,5LH	5-5, 5-7
90117-0030	LOCKING HANDLE, M8/F	5-321
90119-0043	OPTO-RELAY, 22DC 60S-3/32VDC	9-121
90119-0056	RELAY, AUXILIARY MK3P5-S 24VDC	9-77, 9-79, 9-81, 9-83, 9-85
90119-0063	OPTO-RELAY, DC/DC AMMS-10-1/30VDC	2-199
90119-0067	SOLID-STATE RELAY, H12WD4850	9-121
90119-0072	SAFETY RELAY, JSBR4	9-77, 9-79, 9-81, 9-83, 9-85
90119-0082	SSR 90119-67 + HEAT SINK	9-109, 9-117, 9-119
90119-0089	SAFETY RELAY, JSBT4 24VDC	9-77, 9-79, 9-81, 9-83, 9-85
90119-0108	RELAY OMRON G2R-2-SNI-24DC	9-31, 9-77, 9-79, 9-81, 9-83, 9-85
90121-0120	RESISTANCE FIXED, 0,25 KOHM, 0,125 W	9-149, 9-151
90121-0127	RESISTANCE FIXED, 1,5 KOHM, 0,25 W	1-397
90129-0006	BASE, S3-B	9-77, 9-79, 9-81, 9-83, 9-85
90129-0018	BASE, P2RF-08-E	9-31, 9-77, 9-79, 9-81, 9-83, 9-85
90132-0021	HOSE CLIP 6-10MM	1-285, 2-25
90132-0030	SUPORTE MV 87177 KS 580T	1-225, 1-235
90134-0030	SLEEVE FOR PLASTIC TUBE	2-89, 2-91, 4-223, 4-225, 4-299, 5-169, 5-171, 6-85
90134-0031	SLEEVE FOR PLASTIC TUBE	3-11, 4-261, 4-267, 4-269, 4-271, 4-273, 4-279, 4-281, 4-283
90134-0038	BUSHING/NUT INLET/OUTLET 4 MM	4-223, 4-225, 4-261, 4-263, 4-265, 4-267, 4-269, 4-271, 4-273, 4-275, 4-277, 4-279, 4-281, 4-283
90134-0039	BUSHING VALVE CONNECTION 2,5 MM	4-223, 4-225, 4-261, 4-263, 4-265, 4-267, 4-269, 4-271, 4-273, 4-275, 4-277, 4-279, 4-281, 4-283, 5-169, 5-171, 6-85
90134-0040	BUSHING VALVE CONNECTION 4 MM	2-91, 4-261, 4-263, 4-265, 4-267, 4-269, 4-271, 4-273, 4-275, 4-277, 4-279, 4-281, 4-283, 5-169, 5-171
90134-0051	SPACING COLLAR DOSING BLOCK	4-261, 4-263, 4-265, 4-267, 4-269, 4-271, 4-273, 4-275, 4-277, 4-279, 4-281, 4-283
90134-0052	PLUG DOSING BLOCK	4-263, 4-265, 4-267, 4-269, 4-271, 4-275, 4-277, 4-279, 4-281, 4-283, 5-169, 5-171, 6-85
90134-0054	BLOCK CONNECTION M10X1	2-91
90134-0055	BUSHING/NUT INLET/OUTLET 6 MM	2-91, 4-223, 4-225, 4-247, 4-263, 4-265, 4-275, 4-277, 5-169, 5-171, 6-85
90134-0058	CONNECTION	4-143, 4-145, 4-199, 4-201, 4-261, 4-263, 4-265, 4-267, 4-269, 4-271, 4-273, 4-275, 4-277, 4-279, 4-281, 4-283, 4-287, 5-25, 5-27, 5-211, 5-231, 5-233, 5-235, 5-237, 5-239, 5-241, 6-15, 6-25, 6-27, 6-33, 6-51, 6-53, 6-59
90134-0063	BUSHING/NUT M8X1, D=2,5 MM	4-7, 4-9, 4-11, 4-17, 4-19, 4-21, 4-51, 4-53, 4-55, 4-57, 4-59, 4-65, 4-67, 4-69, 4-71, 4-73, 4-83, 4-85, 4-89, 4-91, 4-227, 4-229
90134-0065	CONNECTION M6 TUBE 2,5 MM	4-223, 4-225, 5-25, 5-27
90134-0068	CONNECTION	3-11, 4-143, 4-145, 4-199, 4-201, 4-295, 4-297, 5-13, 5-15, 5-231, 5-233, 5-235, 5-237, 5-239, 5-241
90135-0026	EARTH TERMINAL, 3802.6	2-311, 2-321, 2-341, 5-333, 6-83, 11-87
90135-0035	EARTH WIRE, L=250 MM 16 MM2	9-43, 9-45, 9-63, 9-65, 9-67, 9-69, 9-77, 9-79, 9-81, 9-83, 9-85, 9-97, 9-99, 9-105, 9-111, 9-113, 9-123, 9-125, 9-135, 9-137, 9-149, 9-151
90135-0039	SHIELD CLIP KLBU 4-13.5	9-35
90135-0040	EARTH WIRE, L=150 MM 16 MM2	8-199, 8-201
90135-0044	EARTH WIRE, L=320 MM 16 MM2	2-309, 2-319

Part No	Description	Page No
90140-0010	T-PIPE, INT. THREAD, 20031/2	2-249
90140-0012	ELBOW, 90 INT/EXT, 2020-1/2-1/2	1-317
90140-0013	ELBOW, 90 INT/EXT, 2020-1/4-1/4	2-239, 2-241, 2-251, 2-253
90140-0015	T-PIPE, INT. THREAD, 2003-1/8	11-57, 11-59
90140-0018	T-PIPE, INT. THREAD, 2003-1/4	2-251, 2-253, 11-51
90140-0019	ELBOW, 90, INT. THREAD, NO. 2013-1/4	2-251, 2-253
90140-0020	ELBOW, 90, INT/EXT. THREAD, NO. 2020-3/8	7-71, 7-73, 8-235, 8-237, 8-239
90140-0023	T-PIPE, INT. THREAD, NO. 2070-3/8-3/8	7-17, 7-71, 7-73
90140-0079	SLEEVE, INT. THREAD, NO. 501-08	7-81
90141-0015	RETAINING RING FOR SHAFT DIN 471 8 SS	2-143, 4-127, 5-21, 5-23, 6-43, 6-45, 8-15, 8-137
90141-0016	RETAINING RING FOR SHAFT DIN 471 10 SS	1-175, 1-177, 1-193, 1-195, 1-341, 3-19, 3-35, 5-21, 5-23, 8-15, 8-99, 8-101, 8-139, 8-145, 8-157, 8-159
90141-0017	RETAINING RING FOR SHAFT DIN 471 17 SS	6-25, 6-27, 6-43, 6-45, 8-163
90141-0019	RETAINING RING FOR BORE DIN 472 50 A2	5-169, 5-171, 5-285, 5-307, 5-313, 5-315
90141-0020	RETAINING RING FOR BORE DIN 472 42 A2	2-39, 6-11
90141-0022	SNAP RING B 16	1-227, 1-231
90141-0029	CIRCLIP	4-165, 4-167, 4-211, 4-213, 4-215, 4-217
90143-0020	STRIP	2-29
90143-0054	STRIP	2-273
90143-0057	STRIP EMKA 1011-05 21X11MM	2-339, 7-11, 9-19, 9-49, 9-51, 11-85
90143-0059	SELF GRIPPING GASKET, 4610069	1-375, 1-381, 9-49, 9-51
90143-0060	EDGE STRIP 9,5X6,3MM BLACK PVC	1-399, 1-401, 2-133, 2-135, 2-137, 7-11, 7-55, 7-59, 8-55, 8-131, 8-273, 9-49, 9-51
90143-0097	SELF GRIPPING GASKET, 1011-24	1-367, 1-399, 1-401, 2-9, 2-37, 2-293, 2-343, 2-345
90144-0007	TAPE	1-325, 7-35, 7-37, 7-39, 7-45, 7-81
90144-0044	TAPE SCOTCH VHB 4945;12,7MM	8-285
90144-0072	TAPE SCOTCH VHBS 4945 W=12,7MM	8-295, 9-149, 9-151
90144-0073	TREBOFLON-TAPE W=13MM	1-225, 1-235, 1-287, 1-291, 1-315, 1-317, 1-321, 1-323, 2-37
90148-0101	MEASURING HOSE,MINIMESS S110-AC-FA-0063	2-79
90152-0016	HOSE (SPIRAL)	2-177
90152-0017	HOSE (SPIRAL)	2-255
90152-0050	SPIRAL CONDUIT, 20X13, UL 1313	1-151, 1-255, 1-259, 1-315, 1-383, 1-387, 1-389, 1-399, 1-401
90152-0051	SPIRAL CONDUIT, 25X18, UL 1816	1-259, 1-285, 1-315, 8-305
90152-0058	SPIRAL CONDUIT, 15X9, UL 0909	1-399, 1-401, 7-19
90152-0059	SPIRAL CONDUIT, 18X12, UL 1211	1-285, 2-195, 2-197
90152-0060	SPIRAL CONDUIT, 42X35, UL3529	8-177
90152-0070	METAL HOSE, 32,5X26, UL 2621	1-259, 1-399, 1-401, 2-185, 2-187, 2-189, 2-191, 8-177
90153-0015	ADHESIVE,LOCTITE IS 496/CYANOLOT 303	4-155, 4-157, 4-159, 4-161
90153-0020	ADHESIVE, BOSTIK 1782 125ML	1-229
90153-0023	ADHESIVE, SILICON 251470 TUB 90CC(UN1993	1-15, 1-17, 1-149, 2-29
90153-0053	ADHESIVE, LOCTITE 648 TEMP 150`C 50ML	4-115, 4-117, 4-119, 4-121, 4-143, 4-145, 4-175, 4-177, 4-179, 4-181, 4-199, 4-201
90153-0060	ADHESIVE, 3M DP-190 B/A	2-339
90155-0008	HANGER CHAIN, 18	1-311
90157-0016	LOCKING FLUID LOCTITE 242 50 ML	2-63, 5-321, 7-71, 7-73, 8-25, 8-167, 8-183, 8-185, 8-193, 8-197
90157-0021	LOCKING FLUID LOCTITE 270	2-179, 2-181, 4-231, 4-233, 4-235, 4-237, 4-261, 4-273, 5-85, 5-87, 5-89
90157-0034	THREAD SEALANT LOCTITE 572 50 ML	1-309, 2-257, 2-259
90157-0037	THREAD SEALANT LOCTITE 542	1-11, 1-225, 1-235, 1-315, 1-317, 1-319
90157-0041	SEALING COMPOUND, RHODORSEAL 5651	2-265, 2-267, 2-273, 2-281, 2-283, 2-287, 2-293, 2-295, 2-303, 2-313, 2-315, 2-317, 2-323, 2-325, 2-333
90161-0001	O-RING MATERIAL 3 MM	2-133, 2-135, 2-137
90163-0007	CONNECTION	11-51, 11-71
90163-0014	QUICK COUPLING, (M) LP-006-1-WR013	2-89
90163-0016	QUICK COUPLING, (F) LP 006-0-WR013	11-51
90163-0041	HOSE NIPPLE, EXT.THR. 3/8-12 MM	2-89, 7-71, 7-73
90163-0052	HOSE NIPPLE, EXT.THR. 1/4-12 MM	2-79
90163-0056	QUICK COUPLING, (F) 5054-6/4	11-57, 11-59
90163-0057	QUICK COUPLING, (M) 5150-1/8	1-355, 1-357, 11-57, 11-59
90163-0062	QUICK COUPLING, (F) 5053-1/8	1-355, 1-357
90163-0063	QUICK COUPLING, (M) 5450-6/4	4-247
90163-0064	QUICK COUPLING, (M) LP-006-2-WR517	2-79, 2-89
90163-0076	QUICK COUPLING, (F) LP-006-0-WR021	2-79
90163-0087	QUICK COUPLING, (M) 5150-1/4	11-57, 11-59
90163-0113	QUICK COUPLING, (M) LP-006-1-WR013-22	11-51
90163-0141	QUICK-RELEASE COUPLING SS-QTM2A-B-8M0-K2	2-37
90163-0172	QUICK-RELEASE COUPLING SS-QTM2A-B-8M0-K4	2-37
90163-0304	QUICK COUPLING, LP-006-5-74-KU (DUST CAP	2-79, 2-89
90164-0015	LIGHT FIXTURE, RL70CV-111 / 230V 50HZ	8-111, 8-113
90164-0303	LIGHT FIXTURE, BRACKET 70MM	8-111, 8-113
90165-0003	PIPE CLIP FOR TUBE D=4 MM	9-97, 9-99, 9-149, 9-151
90165-0007	PIPE CLIP FOR TUBE D=8 MM	9-77, 9-79, 9-81, 9-83, 9-85, 9-97, 9-99, 9-123, 9-125, 9-135, 9-137, 9-149, 9-151
90165-0009	PIPE CLIP FOR TUBE D=12 MM	8-111, 8-113
90165-0019	TOOL CLIP, 81/3, OPEN, 20 - 30 MM	2-47, 2-161, 2-163, 2-165
90165-0022	PIPE CLIP, FOR TUBE D=2,5 MM, B-3570	9-123, 9-125, 9-135, 9-137, 9-149, 9-151
90165-0024	PIPE CLIP FOR TUBE D=5 MM	9-149, 9-151
90165-0039	PIPE CLAMP D=15 MM, GSK15/12	1-235
90165-0056	PIPE CLIP FOR TUBE D=4 MM	2-141, 4-115, 4-117, 4-119, 4-121, 4-143, 4-145, 4-175, 4-177, 4-179, 4-181, 4-199, 4-201, 6-43, 6-45
90165-0057	PIPE CLIP FOR TUBE D=6 MM	2-141, 2-293, 5-35, 5-37, 5-39, 5-95, 5-97, 5-169, 5-171, 5-231, 5-233, 5-235, 5-237, 5-239, 5-241, 5-307, 5-313, 5-315, 9-149, 9-151
90165-0058	PIPE CLIP FOR TUBE D=2,5 MM	2-141, 4-115, 4-117, 4-119, 4-121, 4-143, 4-145, 4-175, 4-177

Part No	Description	Page No
		4-179, 4-181, 4-199, 4-201, 4-223, 4-225, 6-33, 6-51, 6-53
90165-0060	PIPE CLIP FOR TUBE D=5 MM	6-25, 6-27
90165-0065	PIPE CLAMP D=8 MM, GSK08/12	7-79
90165-0087	T-CLIP T6 FOR TUBE D=6 - 7 MM	8-167, 8-185, 8-197
90166-0008	HOSE 7/10 PVC TRANSP.	1-13, 2-35, 2-339
90166-0013	TUBE 8 MM PA BLUE	1-257, 1-355, 1-357, 1-367, 2-47, 2-153, 2-155, 2-157, 2-159, 2-161
		2-163, 2-165, 2-177, 2-249, 2-257, 2-259, 5-67, 5-69, 5-71, 5-73, 5-75, 7-81
90166-0045	HOSE PVC TRANSP. 6/12	7-17, 11-71
90166-0049	HOSE PVC 25/33-34	2-249
90166-0060	HOSE 19/26-27 REINF.PVC	2-13
90166-0068	TUBE 12 MM PA BLUE	1-355, 1-357, 1-367, 1-375, 2-47, 7-77, 8-35, 8-37, 8-39, 8-235, 8-237
		8-239
90166-0081	TUBE 6 MM PA BLUE	1-367, 1-375, 2-9, 2-37, 2-43, 2-45, 2-47, 2-153, 2-155, 2-157, 2-159
		2-161, 2-163, 2-165, 2-185, 2-187, 4-249, 4-251, 4-253, 5-181, 5-183
90166-0087	HOSE 15/23 REINF.PVC TRANSP.	1-317, 1-319, 2-27
90166-0095	TUBE 4 MM PA BLUE (50M)	1-367, 1-375, 2-47, 2-161, 2-163, 2-165, 7-77, 8-139
90166-0101	HOSE, SILICONE, 60 SHORE, 6/10 MM	2-25
90166-0108	TUBE 6 MM PA TRANSP.	2-91, 4-223, 4-225, 4-299, 5-169, 5-171, 6-85
90166-0109	TUBE 4 MM PA TRANSP.	4-143, 4-145, 4-199, 4-201, 4-261, 4-267, 4-269, 4-271, 4-273, 4-279
		4-281, 4-283, 5-231, 5-233, 5-235, 5-237, 5-239, 5-241
90166-0110	TUBE 15 MM PA,TRANSP.	2-249
90166-0113	HOSE	2-89, 11-71
90166-0117	HOSE 4/6 PVC BLUE	8-153, 8-157, 8-159, 8-237, 8-239
90166-0118	TUBE 8 MM PA BLACK	1-11, 2-35, 2-239, 2-241, 5-41, 5-43, 5-105, 5-107, 5-131, 5-133, 5-135
		6-43, 6-45, 7-9, 7-17, 7-19, 7-21, 7-29, 7-71, 7-73
90166-0121	HOSE	1-235, 2-9, 2-79, 2-145, 2-147, 2-249, 7-13, 7-15, 7-17, 7-19, 7-23, 7-37
90166-0123	HOSE	4-299
90166-0124	TUBE 6 MM PA,TRANSP.	11-57, 11-59
90166-0132	TUBE 6 MM PA,TRANSP.	2-31, 2-251, 2-253, 4-247, 5-279, 5-281
90166-0138	HOSE	2-17, 2-19
90166-0141	TUBE 10 MM PA,TRANSP. MIN.50M	2-255
90166-0143	TUBE 2,5 MM PA TRANSP.	4-223, 4-225, 4-261, 4-263, 4-265, 4-267, 4-269, 4-271, 4-273
		4-275, 4-277, 4-279, 4-281, 4-283, 5-169, 5-171, 5-231, 5-233, 5-235, 5-237, 5-239, 5-241, 6-85
90166-0151	HOSE	2-17, 2-19, 2-63, 2-133, 2-135, 2-137
90166-0158	HOSE	2-27, 2-63
90166-0161	HOSE	2-25
90166-0176	RUBBER HOSE	1-387, 1-389
90166-0188	PLASTIC HOSE	7-7
90166-0193	TUBE 6 MM PUR BLUE	1-291, 1-293, 1-355, 1-357, 8-17, 8-97, 8-121, 8-139, 8-167, 8-169
		8-185, 8-187, 8-195, 8-197
90166-0194	TUBE 8 MM PUR BLUE	8-107, 8-109, 8-111, 8-113, 8-121, 8-167, 8-235, 8-237, 8-239
90166-0195	TUBE 12 MM PA BLUE	1-291, 1-355, 1-357, 2-257, 2-259
90166-0196	TUBE 14MM PA BLUE	2-257, 2-259, 7-79, 7-81
90166-0198	RUBBER HOSE	2-37, 2-65
90166-0199	RUBBER HOSE	1-207
90166-0216	TUBE 10 MM PUR BLUE	2-155, 2-157, 2-159
90166-0225	HOSE	2-37
90166-0232	SHRINKABLE HOSE	7-11
90166-0233	HOSE	2-69, 2-71, 7-47
90166-0236	HOSE, 38/51 REINFORCED RUBBER	1-307, 2-125, 2-347, 7-35
90166-0260	HOSE	2-249
90166-0266	TUBE 6 MM PA BLACK	2-243, 2-245, 2-247, 6-73
90181-0052	CABLE DUCT 25X80MM	9-35
90181-0053	CABLE DUCT 40X80MM	9-21, 9-27
90181-0054	CABLE DUCT 60X80MM	9-35
90181-0055	CABLE DUCT 80X80MM	9-35
90181-0064	LOCK ZP1 FOR CHANNEL T1	9-77, 9-79, 9-81, 9-83, 9-85, 9-97, 9-99, 9-105, 9-111, 9-113
		9-123, 9-125, 9-135, 9-137, 9-149, 9-151
90181-0067	DIVIDING PLATE SEP80	9-21, 9-27
90181-0182	CABLE TRENCH PARTS	2-139
90181-0183	CABLE DUCT, FITTING, B2	2-139
90181-0199	FLEXIBLE CHAIN, LINK 15	8-103
90181-0202	FLEXIBLE CHAIN, BRACKET 1015. 1PZ	8-103
90181-0203	FLEXIBLE CHAIN, BRACKET 1015. 2PZ	8-103
90181-0313	RIVET DUCTAFIX R4	8-199, 8-201, 9-21, 9-27, 9-35
90187-0029	BALL VALVE G1/2, NPBR	7-25, 7-71, 7-73
90187-0045	BALL VALVE G1/4 CR PL	7-7, 7-19, 7-27, 11-51, 11-71
90187-0059	BALL VALVE FOR HYDR.PER. G1/2 3MM HOLE	2-17, 2-19, 2-27
90187-0062	BALL VALVE G1/2, NPBR	1-235, 1-317
90187-0088	BALL VALVE G1/4, NPBR	8-123
90187-0089	BALL VALVE G3/8, NPBR	7-71, 7-73
90187-0096	BALL VALVE G1	1-291
90187-0110	DIAPHRAGM VALVE DN15, NC WELD CONN.	1-293
90187-0130	TEMP. CONTR. VALVE, R3/4 0-30øC	7-23
90187-0133	SAFETY VALVE, 10 BARS, R1/2, R1/2	7-37
90187-0147	BALL VALVE G11/2	7-35
90187-0148	BALL VALVE G1	7-47
90187-0149	THROTTLE VALVE, G1/4, G1/4, MALE	2-243, 2-245, 2-247
90189-0005	BALL BUSHING, 30X47X68 MM	8-161
90189-0011	BALL BUSHING, 16X26X36 MM	2-297, 8-143
90189-0025	BALL BUSHING, 25X37X37 MM	8-251, 8-253
90191-0047	WHEEL, NO.798 821	11-73
90191-0060	CASTOR WHEEL, NO. 1599PRT	11-73
90191-0077	WHEEL	11-79

Part No	Description	Page No
90194-0113	ADHESIVE LABEL, CALIBRATED & DATE	11-23
90194-0133	SIGN "DELIVERED DESIGN"	2-339
90194-0143	WARNING SIGN ISO, HOT SURFACE	8-165
90194-0152	SIGN, EARTH	2-309, 2-319, 9-19, 9-35, 9-43, 9-45, 9-49, 9-51, 9-63, 9-65, 9-67, 9-69, 9-105, 9-111, 9-113, 9-123, 9-125, 9-135, 9-137, 9-149, 9-151
90194-0163	SIGN, EARTH WITHIN CIRCLE	11-85
90194-0164	SIGN, FRAME/CHASSIS WITHIN CIRCLE	11-85
90195-0020	TERMINAL BLOCK, BK 2CRN; 0624720000	2-39, 5-173, 5-175, 5-177
90195-0028	TERMINAL BLOCK, 6440	1-229
90195-0029	CONN. LINK NO324 FOR -28	1-229
90201-0098	ADJ. FLOW CON. VALVE, NO. 9 PCCM 400SF	10-49
90201-0131	VALVE	2-83
90201-0132	VALVE	2-83
90201-0133	VALVE	2-83
90201-0135	PRESSURE REDUCING VALVE	2-83
90201-0136	DIRECT CHECK VALVE, NO. DGMDC-3-Y-PK-41	2-83
90201-0407	BOLT KIT REMPLAZA AL 90201-0456	2-83
90201-0448	PLUG	2-83
90201-0449	PLUG	2-83
90201-0450	PLUG	2-83
90206-0030	HEATING ELEMENT 3000W, 220V	5-173, 5-175, 5-177
90206-0070	HEATING ELEMENT 6000W 380/220V	1-315
90206-0132	HOT AIR ELEMENT	6-43, 6-45
90206-0326	CONNECTION BOX K2 FOR 90206-56 AND -70	1-315
90206-0330	SOCKET WRENCH 2"9	11-5
90207-0363	GASKET 75X85X1,8 MM 3" FDA 3-A	1-267, 10-27
90207-0365	GASKET 53X63X1,8 MM 2,5" FDA 3-A	1-267, 10-27
90208-0087	CLAMPING ELEMENT WITH SLEEVE, 45X59 MM	5-29, 5-31, 5-77, 5-79
90211-0002	WIRE LOCK, 5 MM	8-251, 8-253
90214-0036	BALL BEARING, 10X22X6 MM	3-19, 3-35
90214-0037	BALL BEARING, 5X16X5 MM	1-343
90214-0093	BALL BEARING, 12X28X8 MM	6-25, 6-27, 6-51, 6-53
90214-0105	SPHERICAL BALL BEARING, 15X35X14 MM	1-135, 1-137
90214-0112	BALL BEARING, 12X24X6 MM	1-199
90214-0138	BALL BEARING, 5X19X6 MM	1-345, 1-347, 8-13, 8-31
90214-0165	BALL BEARING, 25X47X12 MM	1-181, 1-183
90214-0189	BALL BEARING, 17X40X12 MM	6-11, 6-25, 6-27, 6-33, 6-59
90214-0194	SPHERICAL BALL BEARING, 15X35X1 MM	4-291, 4-293
90214-0219	CYL.ROLLER BEARING, 17X40X12 MM	5-307, 5-313, 5-315
90214-0225	BALL BEARING SOLID OIL 20X42X12 MM	6-11
90214-0229	BALL BEARING, 65X85X10 MM	5-231, 5-233, 5-235, 5-237, 5-239, 5-241
90214-0303	SEALING RING, 18,6X35X2 MM	1-171, 1-173, 1-175, 1-177, 1-181, 1-183, 1-185, 1-187, 1-189
90217-0206	UNION NUT, 1 1/2 APV, 07-01-376/17	1-311
90217-0348	GASKET 35,4X46,8X4 MM	1-279, 1-281, 1-311, 10-9
90220-0034	THERMOCABLE TEX/SITW-20F-KX 2X0,5MM2	1-221, 1-259, 1-285, 1-315, 1-399, 1-401, 2-55, 2-57, 2-117, 2-119, 2-185, 2-187, 2-189, 2-191, 7-19, 8-165, 9-71, 9-73
90220-0072	SCR. CABLE 4X0,34MM2	1-399, 1-401
90220-0091	PAIR TWISTED CABLE 2X2X0,25MM2	2-83, 2-117, 2-119, 9-7, 9-9
90220-0092	PAIR TWISTED CABLE 3X2X0,25MM2	8-143, 8-281, 8-283
90220-0095	SCR. CABLE 3X0,75MM2	7-11
90220-0096	SCR. CABLE 3X1,5MM2	6-77
90220-0104	SCR. CABLE 4X1,5MM2	1-399, 1-401, 2-185, 2-187, 2-189, 2-191, 8-133, 8-177, 8-199, 8-201, 8-247, 9-71, 9-73
90220-0105	SCR. CABLE 4X2,5MM2	1-399, 1-401, 9-55
90220-0107	SCR. CABLE 5X0,75MM2	2-117, 2-119, 2-185, 2-187, 9-27, 9-71, 9-73, 11-89
90220-0165	SCR. CABLE 5X0,34MM2	1-259, 1-387, 1-389, 1-399, 1-401, 2-117, 2-119
90220-0180	CABLE, ETHERNET RJ 45 CONNECT. 3 M	9-149, 9-151
90220-0181	CABLE, ETHERNET RJ 45 CONNECT. 5 M	9-93
90220-0183	SCR. CABLE 2X0,34MM2	9-71, 9-73, 9-149, 9-151
90220-0201	CABLE OLFLEX 18X0,75 MM2	1-259
90220-0303	CLAMP FOR SCR.CABLE, 10MM, 55-016-22	7-11
90220-0305	CLAMP FOR SCR.CABLE, 16MM,	7-11
90224-0303	CONN. ELBOW 1020-8-1/4	11-57, 11-59
90224-0308	CONN. BANJO, ART. NO. 2023-1/8-1/8	1-355, 1-357
90224-0329	ELBOW 90 COUPL.,EXT.THREAD 6/4-G1/4"	2-243, 2-245, 2-247, 2-251, 2-253
90224-0349	CONN. BULKHEAD. 1250-6	1-291, 1-355, 1-357
90226-0458	MOUNTING SCREW	1-415, 1-419, 1-421, 2-275, 2-277, 2-279, 2-281, 2-283, 2-293, 2-297, 2-299, 2-301, 2-305, 2-323, 2-335, 7-53, 7-59, 7-63, 8-55, 8-267, 8-275, 8-277, 8-281, 8-283, 8-297, 8-299, 8-309, 9-41, 9-75
90230-0017	NON-RETURN VALVE RHD 10-L	2-81
90230-0023	NON-RETURN VALVE	2-79
90230-0027	NON-RETURN VALVE QJ 8355-1/4"	2-293, 6-73
90230-0028	NON-RETURN VALVE H 151 R 3/8"	2-251, 2-253, 7-19
90230-0032	NON-RETURN VALVE, 8MM, L=63,25	2-21, 7-7
90230-0040	NON-RETURN VALVE, R3/8, L=55	7-7
90230-0041	OVERPRESSURE VALVE SS-4 CPA2-RTDG-3	7-27
90230-0042	NON-RETURN VALVE 1/2"	2-145, 2-147, 7-37, 7-45
90230-0044	NON-RETURN VALVE 1"	2-145, 2-147, 7-39
90230-0045	NON-RETURN VALVE 1 1/2", 4968995	1-309
90230-0064	CHECK VALVE, 6 MM HIGH TEMP.	1-255, 2-31
90232-0103	PH.CELL E3S-CT61-L-5M	5-297, 5-299, 5-331, 6-61, 6-63, 6-81
90232-0104	PH.CELL E3S-CT61-D-5M	5-297, 5-299, 5-331, 6-61, 6-63, 6-81
90232-0106	PH.CELL E3S-CR11-5M	8-245
90232-0129	PH.CELL E3S-CR61-5M	8-129, 8-245

Part No	Description	Page No
90232-0333	REFLECTOR E39-R1	8-111, 8-113, 8-245, 8-303, 8-307
90233-0027	TUBE FUSE 16A, A070GRB16T13 J330012	9-127, 9-129, 10-9
90233-0028	TUBE FUSE 10A, A070GRB10T13 G330010	9-127, 9-129, 10-9
90233-0029	TUBE FUSE 25A, A070GRB25T13 L330014	9-127, 9-129, 10-9
90233-0062	TUBE FUSE, 4A 600V	9-127, 9-129
90235-0151	NON-RETURN VALVE, 534 098 110 0	7-45
90235-0206	QUICK EXHAUST VALVE, SEU-1/8	8-167
90235-0250	THROTTLE CHECK VALVE, GR-1/8-B FESTO	8-105
90235-0274	THROTTLE CHECK VALVE, G1/8", SCU-604-1/8	1-355, 1-357
90235-0731	THROTTLE CHECK VALVE, G1/4", SCO-606-1/4	5-35, 5-37, 5-39, 5-95, 5-97
90235-0844	THROTTLE CHECK VALVE, M5, MANUAL, 6MM	1-223
90235-0846	THROTTLE CHECK VALVE G1/8", MANUAL, 6	1-193, 1-195, 5-181, 5-183, 8-97, 8-99, 8-101, 8-187, 8-195
90235-0847	THROTTLE CHECK VALVE, G1/4", MANUAL,6	1-19
90235-0848	THROTTLE CHECK VALVE, G1/8", MANUAL,8	8-107, 8-109
90236-0041	BRACKET, 74504-50	1-257
90237-0070	SNAP-IN BALL LOCK, 69X19 MM	2-273
90237-0079	FAST LOCKING BOLT, FSQ -M8	2-285, 2-315
90237-0128	LOCK CYLINDER, 1109-SU125	2-267, 2-269, 2-287, 2-313, 2-325, 2-329, 2-331, 2-333, 7-57, 7-61, 8-293, 8-295, 8-303, 9-63
90237-0129	LOCK CYLINDER, 1109-U6	2-307, 2-317, 9-45
90237-0142	LOCK HOUSING, 1000-U45	11-85
90237-0151	GUIDE, 1001-U11	9-45, 9-63, 9-65, 9-67, 9-69
90237-0152	GUIDE, 1001-U12	9-45, 9-63, 9-65, 9-67, 9-69
90237-0153	LOCK HOUSING, 1121-U26-0B	2-269, 2-307, 2-317, 2-325, 2-329, 2-331, 7-57, 7-61, 8-293, 8-295, 8-303, 9-45, 9-63, 9-65, 9-67, 9-69
90237-0155	LOCK ADAPTER, 1121-U40	9-45, 9-63, 9-65, 9-67, 9-69
90237-0156	LOCK BOLT, 1000-16	9-45, 9-63, 9-65, 9-67, 9-69
90237-0157	LOCK BOLT, 1000-230	2-339, 7-65, 7-67, 9-59, 9-61, 9-149, 9-151
90237-0160	ESCUTCHEON WITH SQUARE, 1121-U23/U13	9-65, 9-67, 9-69
90237-0165	LATCH	2-317, 8-303
90237-0168	ROUND BAR WITH END WHEEL, 1049-U5	9-45, 9-63, 9-65, 9-67, 9-69
90237-0169	LOCK ADAPTER, 1000-U49	9-45, 9-63, 9-65, 9-67, 9-69
90237-0175	TURNING HANDLE, 1125-U185-0A	7-57, 7-61, 8-293, 8-295, 8-303
90237-0176	TURNING HANDLE, 1125-U190-A	2-269, 2-307, 2-317, 2-325, 2-329, 2-331, 9-45, 9-63
90237-0178	FAST LOCKING SOCKET,4-28599, M8	2-285, 2-315
90237-0319	LOCK HOUSING, 1000-U134	1-289, 1-419, 1-421, 2-339, 7-65, 7-67, 9-59, 9-61, 9-149, 9-151
90237-0320	LOCK HOUSING, 1000-U136	2-339, 7-65, 7-67, 9-59, 9-61, 9-149, 9-151
90237-0322	LOCK GASKET, 1000-U137	7-65, 7-67, 11-85
90237-0323	LOCK O-RING, 1000-24	1-289, 1-419, 1-421, 7-65, 7-67
90237-0324	KEY, 1104-02 FOR SQUARE 8 MM	9-65, 9-67, 9-69, 11-85
90237-0328	LOCK BOLT, 1000-229	11-85
90237-0335	LOCKING CATCH	1-289, 1-419, 1-421
90237-0337	LOCK HANDLE FOR 90237-319	1-289, 1-419, 1-421
90237-0368	LOCK CAM, 1000-15	11-85
90239-0405	ROD END,BALL JOINT EYE M10X1,25	8-99, 8-101, 8-187, 8-195
90239-0487	REAR, CLEVIS, MINI-ISO 20-25	8-187, 8-195
90239-0489	ROD END, CLEVIS WITH AXLE M6X1,25	1-175, 1-177, 1-191, 1-193, 1-195
90239-0491	ROD END, BALL JOINT EYE, MINI-ISO M6	8-139
90239-0832	DOUBLE ACTING, MINI-ISO, CYL. 25-125	8-187, 8-195
90239-0841	DOUBLE ACTING, MINI-ISO, CYL. 16-25	1-191
90239-0861	DOUBLE ACTING, MINI-ISO, CYL. 32-125	8-99, 8-101
90240-0119	BEAR. BUSHING WITHOUT FL	3-19, 3-35
90240-0146	FLANGE BUSHING, 15X21X20 MM	1-321, 1-323
90240-0152	PLAIN BEAR,SELF ADJ.SPHER.12X22X10 MM	8-153
90240-0165	FLANGE BUSHING, 12X16X10 MM	4-309
90240-0172	FLANGE BUSHING, 8X12X10 MM	1-31, 1-33, 1-39, 1-41, 1-47, 1-49, 1-71, 1-73, 1-75, 1-77, 1-79, 1-87, 1-89, 1-91, 1-93, 1-105, 1-107, 1-109, 1-113, 1-115, 1-123, 1-125, 1-127
90240-0180	FLANGE BUSHING 10X14X15MM	4-243, 4-245, 10-15, 10-17, 10-19, 10-21, 10-23, 10-25
90240-0258	BUSHING, 15X17X15 MM	5-289, 5-291, 5-293
90240-0260	FLANGE BUSHING, 8X10X9 MM	4-93, 4-95, 4-97, 4-99, 4-101, 4-105, 4-107, 4-111
90240-0261	FLANGE BUSHING, 12X14X9 MM	4-305, 4-307
90240-0263	FLANGE BUSHING, 15X17X12 MM	5-289, 5-291, 5-293
90240-0265	FLANGE BUSHING, 20X23X21 MM	6-43, 6-45
90240-0289	FLANGE BUSHING, 10X12X6 MM	4-63, 4-77, 4-93, 4-95, 4-97, 4-99, 4-101, 4-105, 4-107, 4-111, 4-305
90240-0293	FLANGE BUSHING, 25X28X21 MM	1-15, 1-17
90240-0315	SPHER. BEARING, 30X47X22 PLASTIC MM	2-349, 2-351
90240-0316	FLANGE BUSHING, 12X14X8 MM	5-289, 5-291, 5-293
90242-0093	O-RING MATERIAL 1,5 MM	4-155, 4-157, 4-159, 4-161
90242-0222	O-RING 45,36X3,53 MM	2-39
90242-0223	O-RING 47,35X1,78 MM	2-39
90242-0224	O-RING 44,17X1,78 MM	2-39
90242-0270	O-RING 82,27X1,78 MM	1-171, 1-173, 5-231, 5-233, 5-235, 5-237, 5-239, 5-241
90242-0271	O-RING 63,22X1,78 MM	5-231, 5-233, 5-235, 5-237, 5-239, 5-241
90242-0281	O-RING 58X3 MM	5-225, 5-227, 5-229
90243-0118	TOOL BOX, NO. ZERO 105X-SI	11-61
90243-0137	PRESSURE GAUGE KIT 0-50 MM WC, 229900	11-57, 11-59
90243-0146	TOOL	11-5
90243-0147	FLOW METER	11-57, 11-59
90243-0203	MEASURING INSTRUMENT- ZONOSCOPE	11-5
90243-0245	MEASURING INSTRUMENT	7-37
90243-0328	PAPER ROLL	11-5
90243-0329	CABLE	11-5

Part No	Description	Page No
90243-0330	CABLE	11-5
90243-0447	LASER EQUIPMENT	11-5
90243-0456	FORCE GAUGE +-50N, FMI-200B5	11-11
90243-0461	MEASURE GAUGE,6916-0109	11-41
90248-0032	HINGE, 1110-U2	11-85
90248-0047	HINGE, 1150-U50	2-339
90257-0001	FILTER PLUG ART.NO.8145-00-140 TYPE F14	9-173
90258-0031	PIN, STRAIGHT SLOTTED SPRING FRP 3X20	1-161, 1-163, 8-179, 8-181, 8-189, 8-191
90259-0308	INCOMING TERMINAL 032720 BK25/3-PKZ0	9-33
90259-0309	BUSBAR 3-POLE B3.1/4-PKZ0, 044947	9-107
90259-0311	3 POLE BUSBAR, K&M B3.1/5	9-107
90259-0313	AUXILIARY CONTACT 072894 NHI21-PKZM0	9-33, 9-107, 9-115
90259-0314	BUSBAR 3-POLE B3.1/3-PKZ0, 044946	9-33
90261-0016	PLUG, BLIND, PLASTIC GPN300V2	4-7, 4-9, 4-11, 4-17, 4-19, 4-21, 8-111, 8-113
90261-0033	PLUG, BLIND, PLASTIC GPN300F182	2-215, 2-217, 2-221, 2-223, 2-231, 2-233
90261-0048	SQUARE PLUG GPN 260/Q2525	10-5
90261-0049	PLUG, BLIND, PLASTIC, NO. SR1750	8-141
90261-0057	PLUG, BLIND, PLASTIC	2-63
90261-0069	PLUG, BLIND, PLASTIC, NO. 055-0615	7-49
90261-0070	PLASTIC PLUG SS 0082.31	2-9
90261-0079	PLUG, BLIND, PLASTIC, NO. 1955	11-85
90264-0055	FAN / W25 130-AA 03-01	2-309, 2-319
90264-0064	FAN / FL 12G308	9-171
90264-0350	FILTER / 554141	9-171
90266-0019	PIPE 4-223, 4-225, 4-261, 4-263, 4-265, 4-267, 4-269, 4-271, 4-273, 4-275, 4-277, 4-279, 4-281, 4-283	
90266-0165	BRASS PIPE 4-261, 4-263, 4-265, 4-267, 4-269, 4-271, 4-273, 4-275, 4-277, 4-279, 4-281, 4-283 4-295, 4-297	
90266-0166	PIPE	5-211
90270-0349	CONSTANT FLOW VALVE, 1/2"X1/2" 2GPM	1-235
90274-0042	PRESSURE GUARD, 200 KPA	7-71, 7-73
90274-0056	PRESS.SWITCH 1-12BAR, PEV-1/4-B-SA22358	7-27
90274-0074	PRESS. SW. 5,3 BAR, PEV-1/4-B-SA22357	7-79
90274-0082	FLOW SWITCH, 2 - 3 L/MIN	7-35
90274-0084	PRESSURE GUARD, 1800 KPA	2-89
90274-0103	PRESSURE GUARD PEV-1/4-B (10773	2-47
90274-0108	DUAL PRESSURE GUARD, -20 - 2800 KPA	7-17
90274-0124	PRESSURE SWITCH	2-83
90277-0045	FILTER / 9900-05-BK	2-47, 2-161, 2-163, 2-165
90277-0046	FILTER / 9933-05-101	2-47, 2-161, 2-163, 2-165
90277-0086	AIR FILTER, UC-SAB-5101 + UC-DIP-206	2-79
90277-0104	FILTER F64B-2GN-ARO	1-257
90277-0116	FILTER HOUSING / ART.NO FILTER 58P-S5430	8-121
90277-0323	FILTER HOUSING / ART.NO 95S6-1/4 S 5430	1-257
90277-0324	FILTER CARTRIDGE 050-11-A	1-257
90277-0355	FILTER INSERT / MBS 100 IPH	1-291
90286-0013	GREASE NIPPLE STRAIGHT, H1 M6X1 2346	5-181, 5-183, 6-19, 6-35
90287-0073	SCREW MC6S M5X70 129	7-79
90287-0075	SCREW SLOT. PAN HEAD LKCS M6X12	2-133, 2-135, 2-137
90287-0106	SCREW SPRINGLOAD. SLOTTED HEAD M10X21	8-141
90287-0112	SCREW SPRINGLOAD. SLOTTED HEAD M8X16 1-15, 1-17, 4-259, 4-267, 4-269, 4-271, 4-279 4-281, 4-283, 4-309, 8-145	
90287-0124	SCREW PAN HEAD MSCS M4X12 NYLON 9-71, 9-73, 9-77, 9-79, 9-81, 9-83, 9-85, 9-97, 9-99 9-105, 9-111, 9-113, 9-123, 9-125, 9-135, 9-137, 9-149, 9-151	
90287-0137	SPACER BOLT DSSM60100	9-49, 9-51
90287-0148	SCREW SPRINGLOAD. SLOTTED HEAD M5X12	4-249, 4-251, 4-253
90287-0154	SCREW, SOCK.SET DOGPOINT M6X10	6-25, 6-27, 8-241, 8-251, 8-253
90287-0157	SCREW M6SF FLAT HEAD M6X10 88 9-49, 9-51, 9-77, 9-79, 9-81, 9-83, 9-85, 9-97, 9-99 9-105, 9-111, 9-113, 9-123, 9-125, 9-135, 9-137	
90287-0159	SCREW, SOCK.SET DOGPOINT M6X16	2-31
90287-0166	SCREW, SOCK.SET DOGPOINT M8X16	6-19, 6-25, 6-27, 6-35, 6-51, 6-53
90287-0199	SCREW M6S ISO 4017 M5X6 A480	5-211, 6-75
90287-0261	SCREW MC6S M5X55 A270	8-251, 8-253
90287-0264	SCREW	2-75
90287-0295	SCREW HEX.SOCK.COUNT.MF6S M3X8 A280	4-155, 4-157, 4-159, 4-161
90287-0312	SCREW M6S ISO 4014 M6X75 A480	6-17, 6-25, 6-27, 6-51, 6-53
90287-0334	SCREW SPRINGLOAD. SLOTTED HEAD M8X16	8-15
90296-0009	SILICONE GREASE DOW CORNING 150 GR.	10-9
90296-0051	PASTE	8-165
90296-0068	SHELL ALVANIA GREASE EP 2	3-17, 5-169, 5-171, 5-285, 5-307, 5-313, 5-315, 10-9
90296-0072	SHELL OMALA OIL 150, CAN 20 LITRES	6-13, 6-17, 6-25, 6-27, 6-33, 6-51, 6-53
90296-0091	LUBRICATION GREASE	1-171, 1-173, 1-175, 1-177, 1-181, 1-183, 1-185, 1-187, 1-189
90303-0011	PROTECTIVE GOGGLES	10-33
90303-0012	PROTECTIVE GLOVES	10-33
90303-0013	APRON	10-33
90304-0020	RECIPIENTE	7-29
90304-0307	ATTACHMENT PIPE	1-317
90319-0013	POLYESTER-SILKROPE 4MM 3900N, 102079	8-251, 8-253
90321-0102	PUMP, 4MG209XTS37	2-39
90321-0116	PUMP GRUNDFOS CHI 2-60	7-27
90321-0117	PUMP LOWARA SV8-14 F75T	7-41, 7-43
90321-0120	PUMP SV8-09 F756T, 380V60HZ	7-41, 7-43
90321-0128	CHEM. PUMP 081778	2-35
90321-0134	CIRC. PUMP TCB25-6LV.230 HZ 50	1-315
90321-0135	CIRC. PUMP 230V60HZ	1-315

Part No	Description	Page No
90321-0574	PUMP BRACKET LSE-201	2-81
90321-0575	SHAFT COUPLING, 24 MM	2-81
90326-0012	PROTECTIVE COVER, T31A4618	1-15, 1-17, 1-221, 1-255, 1-315, 1-321, 1-323, 7-19, 8-165
90326-0020	PLUG, FEMALE YELLOW CR-AL	1-15, 1-17, 1-221, 1-229, 1-255, 1-285, 1-293, 1-315, 1-321, 1-323, 2-55, 2-57, 2-99, 2-101, 2-117, 2-119, 2-185, 2-187, 2-189, 2-191, 7-19, 8-165, 9-49, 9-51
90326-0022	PLUG, MALE YELLOW CR-AL	1-255, 1-259, 1-285, 1-399, 1-401, 2-55, 2-57, 2-117, 2-119, 2-185, 2-187, 2-189, 2-191, 7-19, 8-165
90326-0051	THERMOCOUPLE, 12826-33	1-229
90326-0053	THERMOCOUPLE, 12826-35	1-255, 1-321, 1-323, 9-49, 9-51
90326-0054	THERMOCOUPLE, CR-AL STD.GR, 12826-36	8-165
90326-0057	THERMOCOUPLE, CR-AL	1-221, 1-315, 7-19
90326-0060	THERMOCOUPLE, CR-AL	1-285
90326-0089	THERMOCOUPLE, 5110-089-000	1-293
90326-0308	THERMOCOUPLE CABLE FOR CE-557793/MALE 5M	11-23
90326-0309	THERMOCOUPLE CABLE FOR CE-557793/FEMALE	11-23
90326-0310	THERMOCOUPLE, 5130020-000	11-23
90328-0007	SILENCER, 0670 00 17	7-79
90328-0017	SILENCER, D=6 MM	2-49, 2-171, 2-173, 2-175, 7-77, 8-235, 8-237, 8-239
90328-0024	SILENCER G3/8"	1-369, 1-371, 1-373, 1-377, 1-379, 2-49, 2-171, 2-173, 2-175, 7-77, 8-235, 8-237, 8-239
90328-0025	SILENCER G1/2"	11-71
90328-0026	SILENCER G1/4"	1-287, 1-291, 1-307
90328-0038	SILENCER, D=8 MM	8-237, 8-239
90328-0047	SILENCER G1/8"	1-293
90330-0004	NIPPLES,HEXAGON,EXT.R-THREAD R3/4"-R3/4"	7-19, 7-23
90330-0011	SLEEVE, REDUCTION, INT, R-2023/8X1/4	1-291
90330-0014	ELBOW, 90 INT. THREAD, R-222R1	7-39, 7-49
90330-0020	ELBOW, 90 INT. THREAD, R-2221/2	1-235, 7-81
90330-0021	NIPPLES, EXT. THREAD. R-207R1/2	2-21, 2-27, 7-7, 7-37
90330-0026	PLUG, EXT. G-THREAD, G1/4	2-9, 2-133, 2-135, 2-137, 6-13, 6-25, 6-27, 6-51, 6-53, 7-27
90330-0028	NIPPLES, EXT. THREAD. R-207R3/8	2-21
90330-0029	PLUG, EXT. G-THREAD, R-236R3/8	11-57, 11-59
90330-0036	BUSHING, INT/EXT. THR. RP1/8-RP1/2	7-37
90330-0037	PLUG, EXT. G-THREAD, G1/2	6-17, 6-33
90330-0042	BUSHING, INT/EXT. THR. R3/8-RP1/4	7-7, 7-17, 7-19
90330-0043	NIPPLES, EXT. THREAD. R-207R1/4	1-315, 7-27, 7-45
90330-0045	NIPPLES, EXT. THREAD. R-209 KR11/2- KR1	7-39
90330-0047	SLEEVE, REDUCTION, INT, R-2021/2X3/8	2-21
90330-0048	BUSHING, INT/EXT. THR. R1/2-RP3/8	1-317, 2-21
90330-0049	T-PIPE, INT. THREAD, R-221R1/2	1-235, 1-319, 2-21, 7-37, 7-79, 7-81
90330-0054	SLEEVE, INT. THREAD, NO. R-201R1/2	2-27
90330-0056	NIPPLES, EXT. THREAD. R-207 KR11/2	7-35
90330-0057	ELBOW, 90 INT. THREAD, R-222R11/2	7-35
90330-0066	PLUG, EXT. G-THREAD, G1/8	1-293
90330-0078	BUSHING, INT/EXT. THR. R3/4-RP3/8	1-235
90330-0080	NIPPLES, EXT. THREAD. R3/4-R1/2	7-27, 7-37
90330-0085	BUSHING, INT/EXT. THR. R1/2-RP1/4	2-21, 7-71, 7-73
90330-0093	NUT, HEXAGON, G1/2	2-85, 2-239, 2-241
90330-0102	SLEEVE, INT, THREAD, NO., R-201R1/4	7-19
90330-0172	ELBOW, 90 INT/EXT, SS-6-SE	1-291
90335-0024	COMP. SPRING 22250, 1,25X13,75X27	4-249, 4-251, 4-253
90335-0025	COMP. SPRING 22010, 1X11X26	8-119, 8-147, 11-75
90335-0036	COMP. SPRING 22450, 1,6X14,1X24	5-35, 5-37, 5-39, 5-95, 5-97
90335-0089	TENSION SPRING 41490, 0,9X10X23	1-345, 1-347, 8-31
90335-0091	TENSION SPRING 41890, 1,2X13X48,2	8-157, 8-159, 8-243
90342-0022	BELLOWS	1-227
90342-0024	RUBBER BELLOWS, 100X100 MM	2-179
90344-0073	TOOTHED WHEEL	2-349, 2-351
90344-0078	PULLEY	8-163
90347-0004	VIBRATION DAMPER D=30 TH=M8 H=17 H2=21MM	1-339
90347-0007	VIBRATION DAMPER	2-11
90347-0009	FLOOR PLATE, NO 1256730	2-231, 2-233, 2-235
90347-0034	VIBRATION DAMPER	1-419, 2-63, 11-13
90347-0039	DAMPER	1-139, 1-151, 1-153, 1-201
90347-0054	ROTARY DASHPOT, S-CRD-P277	1-341, 8-99, 8-101, 8-107, 8-109
90347-0080	DAMPER, TFE 1201	8-45, 8-51, 8-53, 11-7, 11-9
90347-0144	VIBRATION DAMPER, NO. RA 40EM-A	1-207
90347-0182	SHOCK ABSORBER, YSR-16-20-C	8-97, 8-171, 8-173
90358-0091	REDUCING NIPPLE	7-19
90360-0020	STEAM TRAP / MK36/51 3/8 INCH	1-293
90360-0305	FLOAT, ART NO 10739920	1-225
90410-0337	CALIBRATION INSTRUMENT 5100071-001	11-23
90410-0338	CALIBRATION INSTRUMENT 5100071-001	11-23
90411-0001	INSULATING MAT	1-255
90411-0005	INSULATION 1200MM SERIE 21 89/154X30	1-229
90411-0020	INSULATING TUBE	2-249
90415-0032	FILTER / 3-02-00-1 1/2"	7-35
90415-0033	OIL FILTER REFILLING UC-HP-1229-25	2-89
90415-0052	FILTER ART NO 12565 C-340-6E FOTVENTI EP	2-35, 2-37
90415-0065	FILTER	7-7, 7-19
90418-0045	ADAPTER-22-G3/4", INT.CONN. NO.2009140	7-23
90418-0057	ADAPTER, EXT. CONN.,15-G1/2, NO.2008662	7-23
90418-0062	T-PIPE, REDUCTION, INT,22X15X22, 2001042	7-23
90422-0008	COOLER	2-81

Part No	Description	Page No
90422-0037	HEAT EXCHANGER	7-23
90424-0054	SPRAY NOZZLE 120 DEG	1-235
90424-0066	ROT.SPRAY NOZZLE, D26984-B3/8"-PVDF/4.5	2-69, 2-71, 2-145, 2-147
90424-0068	AIR NOZZLE, G1/4, MOD. 216 BSP	5-35, 5-37, 5-39, 5-67, 5-69, 5-71, 5-73, 5-75, 5-95, 5-97, 5-145, 5-147, 5-149
90424-0071	ROT.SPRAY NOZZLE, D40140-R3/8-PVDF 4.5	2-69, 2-71
90425-0016	MECMAN TYPE E120 735-120-000	11-71
90426-0003	HAND SHOWER	2-255
90450-0003	SINGLE ACTING, MINI-ISO, CYL 20-25	8-153, 8-157, 8-159
90450-0281	DOUBLE ACTING,PROF.CYL 32-80	1-231
90450-0306	DOUBLE ACTING, MINI-ISO, CYL. 12-25	8-139
90450-0504	DOUBLE ACTING, PROFILE, CYL 50-25	6-5, 6-7
90450-0654	BRACKET,REAR,EYE WITH AXLE 32	8-107, 8-109
90450-0655	BRACKET,REAR,CLEVIS FLANGE WITH FOOT 32	8-107, 8-109
90450-0669	SENSOR, BRACKET SERIES 168	1-231
90450-0723	ROD END,BALL JOINT EYE M10X1,25	8-107, 8-109
90450-0725	ROD END, CLEVIS WITH AXLE M6	1-223
90450-0756	BRACKET, REAR EYE 32	1-175, 1-177, 1-193, 1-195
90453-0001	MODEM MA-12	9-7
90453-0002	MODEM MD-12 DC	9-149, 9-151
90457-0019	LEVEL PROBE, HMFB-S=45-0=80-0=90-T70	2-79
90457-0020	FLOW RESTRICTOR 1,5 MM, NO 694346	2-83
90457-0035	REDUCING UNIUN	2-79, 2-81
90457-0036	3-PHASE MOTOR,FOOT MOUNT.1,1KW,1410 RPM	2-81
90457-0037	HYDR. PUMP TFP100 3/8-S-C001	2-81
90457-0039	PUMP CONN. ELBOW FLANGE T-26/12-3/8	2-81
90457-0043	BUSHING, INT/EXT. G-THREAD NO. 1/2-1/4	2-81
90457-0046	WASHER PLAIN ROUND 25,4/67,5, H=2	2-81
90457-0047	SENSOR 2750-1-5111-1 W.ADAPTER PNP	1-231
90457-0049	TERMINAL BLOCK WDK 2.5V, 102230	9-25, 9-101
90457-0078	PANEL NUT	1-367, 1-375, 2-47, 2-161, 2-163, 2-165, 7-77, 8-237, 8-239
90457-0092	SAFETY RELAY RT9-24VDC	9-77, 9-79, 9-81, 9-83, 9-85
90457-0100	ACCUMULATOR CRVZS-2	8-123
90457-0134	O-RING	2-83
90457-0144	REGULATOR 0,3-2 BAR	1-375, 2-47, 2-161, 2-163, 2-165, 8-237, 8-239
90457-0177	FLOW-RESTRICTOR, 2,0 MM, M6	2-83
90457-0194	KEY FOR SAF.SW.048850-C2052	2-185, 2-187
90457-0195	KEY FOR SAF.SW.TZRE024PG RC1635-057950	2-185, 2-187
90457-0196	KEY SAF.SW. TZ2RE024PG RC1635	2-105, 2-185, 2-187, 2-189, 2-191
90457-0920	BUTTON SIGN, ROTATION OF MATERIAL HOLDER	8-305
90457-0922	ELBOW PIPE JOINT, EXT.THREAD, D=6MM M5	6-5, 6-7
90458-0048	RETAINING RING FOR HOLE, 62X2 MM	6-13, 6-33
90458-0058	SCREW M5X60 A280	4-141
90458-0072	SCREW ISO 7380 S M6X12 A2	2-213, 2-215, 2-217, 2-221, 2-223, 2-229, 2-231, 2-233
90458-0073	WASHER 6,4/30, H=1,5	2-213, 2-215, 2-217, 2-221, 2-223, 2-229, 2-231, 2-233, 3-21
90458-0135	MALE PLUG, COD.220-0397	6-43, 6-45
90458-0136	FEMALE PLUG, COD 220-0381	6-43, 6-45
90458-0138	PROX.SWITCH E2EG-X1R5B1-5M	4-291, 4-293, 8-135
90458-0162	ELBOW GT48/2, NO.49.49 71 00	11-83
90458-0163	FLANGE COUPLING, GT48/2, NO.49.49 77 00	11-83
90458-0188	GLAND, INSERT, MULTI HOLE, 1X7/1X10,5	2-99, 2-101
90458-0200	PEROX. SAFETY VALVE, NO. 527-430 1/2X3/4	1-317
90458-0201	FLUID AUT. FEEDER, ALINOX 1/2 46.04.00	1-317, 7-7
90458-0256	PROX.SWITCH IIA 3010-BPKG/6M	2-63
90458-0258	TRANSFORMER, 220VAC/6-9-12VAC	8-199, 8-201
90458-0273	SLOT COVER ABP-5-S, 151680	8-97, 8-127
90458-0274	DISC FOR COUPLING, HUCO 236.50T	2-31
90458-0292	BASE, KT70-1001	2-219, 8-271
90458-0293	LIGHT ELEMENT, RED, KL70-401R	2-219, 8-271
90458-0294	LIGHT ELEMENT, YELLOW, KL70-401Y	2-219, 8-271
90458-0295	LIGHT ELEMENT, BLUE, KL70-401L	2-219, 8-271
90458-0305	CABLE GLAND, M12X1,5, NO.5311 1000	2-99, 2-101, 6-25, 6-27
90458-0306	CABLE GLAND, M16X1,5, NO.5311 1010	8-235, 8-237, 8-239, 8-279, 8-301
90458-0307	CABLE GLAND, M20X1,5, NO.5311 1020	2-105, 2-185, 2-187, 2-189, 2-191, 8-133
90458-0310	CABLE GLAND, M40X1,5, NO.5311 1050	11-89
90458-0311	CABLE GLAND, M50X1,5, NO.5311 1060	9-71, 9-73
90458-0313	CABLE GLAND, M12X1,5, NO.5311 1100	6-33, 6-59
90458-0315	CABLE GLAND, M20X1,5, NO.5311 1120	2-185, 2-187, 2-189, 2-191, 8-111, 8-113
90458-0321	NUT, M12X1,5	2-99, 2-101
90458-0322	NUT, M16X1,5	8-235, 8-237, 8-239, 8-279, 8-301
90458-0323	NUT, M20X1,5	8-111, 8-113
90458-0341	THERMOCOUPLE, 5130050-001	1-15, 1-17
90458-0353	BUSHING, 8X10X8 MM	4-93, 4-95, 4-97, 4-99, 4-101, 4-105, 4-107, 4-111
90458-0429	HOSE GLAND W/O INSERT M20 EXTENDED	1-7, 1-9, 1-139, 1-151, 1-153, 1-201, 1-221, 1-421
90458-0438	GLAND, EXTENDED WITH INSERT, M20X1,5	8-163, 8-247
90458-0440	GLAND, EXTENDED WITH INSERT, M25X1,5	1-147, 1-219, 1-303
90458-0506	RETAINING RING FOR BORE DIN 472 26 A2	2-297
90458-0522	STEP MOTOR DRIVE L25	9-27
90458-0528	DOUBLE ACTING, COMPACT, CYL 32-25	1-175, 1-177, 1-193, 1-195
90458-0533	BALL BEARING, 17X35X10 MM	6-43, 6-45
90458-0577	CONNECTION TERMINAL BK 25/3-PKZ 0	9-107, 9-115
90458-0601	CONTRAST SCANNER, KT15W-P2110S01	4-249, 4-251, 4-253
90458-0602	CONTRAST SCANNER, KT15W-P2213S02	8-169
90458-0603	CONNECTOR FEMALE 5 PINS	8-169

Part No	Description	Page No
90458-0639	VARILIP 20X30X7 MM	1-135, 1-137, 1-161, 1-163, 1-175, 1-177
90458-0640	O-RING 88,62X1,78 MM	1-135, 1-137, 1-155, 1-157
90458-0677	PROX.SWITCH E2EG-X5MB1-M1	8-251, 8-253
90458-0751	BUSHING,INT./EXT.G-THREAD G3/4"-G1/2"	1-317
90458-0806	FLOW METER, NO. XF DF23-DN32	1-279, 1-281
90458-0860	PROX.SWITCH E2E-X1B1-5M	2-99, 2-101
90458-0921	FILTER SP 122-200	7-71, 7-73
90458-1076	L-SHAPED CONNECTOR CABLE 933 235-042	8-111, 8-113, 8-241, 8-251, 8-253
90458-1092	PROPORTIONAL VALVE 0 - 10V/0-6 BAR	1-367, 1-375
90458-1102	INTOUCH OEM 2000 V.7.0/7.1 HW KEY	9-149, 9-151
90458-1114	BIMET. ELECTROMECH. THERMOSTAT K7H.020	9-25
90458-1136	TERMINAL BLOCK, 103630	2-103, 8-219, 8-221, 8-223, 8-225
90458-1140	FERRITE, RI-26-28-13	9-123, 9-125, 9-135, 9-137
90458-1141	FERRITE, RI-16-28-9	9-97, 9-99
90458-1155	ENLARGING SLEEVE, 5210 4452	8-133
90458-1162	FILTER 6 A 250 VAC, 6FC10	9-89, 9-91
90458-1170	FERRITE, SFC-6	9-97, 9-99
90458-1173	MULTI DIAMETER MODULE, CM 30W40	2-117, 2-119
90458-1174	MULTI DIAMETER MODULE, CM 20W40	2-117, 2-119, 6-77
90458-1175	MULTI DIAMETER MODULE, CM 15W40	2-117, 2-119
90458-1178	FRAME CF 8	2-117, 2-119, 6-77
90458-1279	PLUG CONNECTOR DP1	9-27
90458-1300	2 AXIS DOCKING STATION D2/PLC	9-27
90458-1307	BLIND PLUG CIRCULAR, M16X1,5 514GFK/216	8-237, 8-239
90458-1310	BLIND PLUG CIRCULAR, M32X1,5 514GFK/232	2-195, 2-197
90458-1393	PUMP CYLINDER, 34 73 522 5	10-51
90458-1404	FLANGE BUSHING, 12X16X16 MM	4-303, 5-231, 5-233, 5-235, 5-237, 5-239, 5-241
90458-1447	MOUNTING RAIL SUPPORT TST 128660	9-97, 9-99
90458-1467	CAP, 32 44 129 7	10-45
90458-1468	SPLIT PIN, 43 71 234 8	10-51
90458-1470	SINK VALVE COMPL, 34 73 094 5	10-51
90458-1471	PISTON ROD END, 32 04 214 5	10-49
90458-1472	CYLINDER, 32 04 215 2	10-49
90458-1473	PUMP, 34 73 521 7	10-43
90458-1476	AXLE PIN, 32 04 167 5	10-49
90458-1477	CONNECTOR 6-1/8 NPT, EXT. TAPERED	2-59
90458-1478	BALL VALVE SS-43GS6MM-SH	2-59
90458-1531	ACTUATOR, N.O., PA 38/100	2-129
90458-1535	TRANSDUCER, BTL5-A11-M0850-P-S32	8-143
90458-1537	HOLDER FOR SENSORS, PA38/PO-TET-PTFE	2-129
90458-1541	DIAPHRAGM, NA 38/25 PFTE	2-129
90458-1592	FLOATING MAGNET, BTL5-P-3800-2	8-143
90458-1595	CONNECTION, BKS-S 33M-00	2-17, 2-19, 8-143
90458-1614	SCREW M6S ISO 4014 M5X80 A480	7-9
90458-1651	EMERGENCY STOP, ZB4-BS-844 ZB4-BZ-104	1-387, 1-389, 2-271, 2-339, 8-291, 8-305, 9-69, 11-85
90458-1704	BALL BEARING, 15X35X11 MM	1-161, 1-163, 1-171, 1-173, 1-175, 1-177, 1-181, 1-183, 1-185, 1-187, 1-189
90458-1849	CONN. STR., 6-R1/8, EXT. THREAD	1-355, 1-357
90458-1856	ADHESIVE LABEL, CONNECTION DIAGRAM	9-27
90458-1870	EMC EARTH BRAID, 16MM2 L=300MM	11-85
90458-1963	STRAIGHT COUPLING D=8-G3/8"	7-7, 7-9, 7-19
90458-1977	REFRACTOMETER SET DA15FC15A DFTP A	2-59
90458-2071	RETAINING RING FOR BORE DIN 472 24 A2	1-199
90458-2102	DOUBLE ACTING, MINI-ISO, CYL. 20-50	2-143
90458-2138	SCREW M6S M12X120 A280	10-3
90458-2173	PIPE CONNECTION, 552608M	7-9
90458-2174	CONDUCTIVITY TRANSMITTER, 418962Z	7-9
90458-2241	PRESSURE SWITCH 0,5-10 BAR ADJUSTABLE	1-257
90458-2264	PRESSURE REGULATOR ARC-30-1/2"	1-291
90458-2301	SPRING, YELLOW SPRING G40X115	3-23
90458-2303	CLAMPING ELEMENT WITH SLEEVE, 38X50 MM	3-7, 3-9
90458-2305	COMP. SPRING D22280	3-19, 3-35
90458-2306	TIMING BELT ATL10 2020X50 MM	3-17
90458-2307	LINEAR UNIT HSR25	3-15, 3-33
90458-2333	VALVE, M8A-V4LQ-KZ-11AO-SS PNEUM. OPER.	2-37
90458-2358	FLOAT, BTL2-S-4414-4Z	2-17, 2-19
90458-2362	BALL BEARING, 30X62X16 MM	6-13
90458-2363	BALL BEARING, 35X72X17 MM	6-33
90458-2381	POWER LINE FILTER 5A	11-85
90458-2448	ELBOW PIPE JOINT,EXT.THREAD,D=8 MM G1/4	8-167
90458-2466	MOTOR 3GVA071002-CSC-M2VA71B2	2-31
90458-2554	STERILE GRADE MEMBRANE FILTER 0,2µM	1-291
90458-2557	CABLE OLFLEX 25X1 MM2	2-185, 2-187, 2-189, 2-191
90458-2580	LEVEL CONTROL RELAY, RM4-LA32M	9-77, 9-79, 9-81, 9-83, 9-85
90458-2602	BULKHEAD CONNECTOR, 12 MM	1-375, 2-257, 2-259
90458-2633	HANDLE, 1045-05	2-229
90458-2737	SPHERICAL BALL BEARING, 15X35X14 MM	8-27, 8-29
90458-2752	PLASTIC HOSE, 3/4"X1"	2-127
90458-2775	PROX.SENSOR SMT-8-PS-K5-LED-24-B	1-19
90458-2845	SCREW,HEXAGON HEAD M6S ISO 4017 M10X45	2-213, 2-221, 2-223, 2-229
90458-2850	HOSE CLIP , 51 MM	7-35
90458-2890	CONNECTOR, 21N-50N12N133NE	1-399, 1-401
90458-2892	CONNECTOR, 11 N-50-3-31/133 NE	1-399, 1-401

Part No	Description	Page No
90458-2893	SLEEVE, 78 Z-0-3-4	1-399, 1-401
90458-2895	COAXIAL CABLE RG 400/U BROWN	1-399, 1-401
90458-2911	LOCKING HANDLE, M6/M	10-5
90458-2920	BUSHING INSERT, JUM-01-16	5-181, 5-183
90458-2950	BALL BEARING, 5X16X5 MM	8-175
90458-2954	ELBOW PIPE JOINT, EXT.THREAD, D=4MM M5	8-139
90458-2955	ELBOW PIPE JOINT, EXT.THREAD,	1-367, 1-375, 2-47, 2-161, 2-163, 2-165, 7-77
90458-2956	ELBOW PIPE JOINT, EXT.THREAD, D=6MM-G1/8	1-19, 1-285, 1-287, 1-293, 1-351, 2-25, 2-35, 2-37, 2-297, 5-181, 5-183, 5-211, 8-237, 8-239
90458-2957	ELBOW PIPE JOINT, EXT.THREAD, D=6MM-G1/4	1-307, 1-367, 1-375, 2-47, 2-161, 2-163, 2-165, 5-301, 5-303, 6-5, 6-7, 8-121
90458-2958	ELBOW PIPE JOINT, EXT.THREAD, D=8MM-G1/4	1-375, 2-47, 2-161, 2-163, 2-165, 5-35, 5-37, 5-39, 5-95, 5-97, 5-145, 5-147, 5-149, 6-43, 6-45, 7-77, 7-79, 8-121, 8-127
90458-2959	ELBOW PIPE JOINT, EXT.THREAD,D=12MM-G1/4	1-367, 1-375, 2-47, 8-237, 8-239
90458-2960	ELBOW PIPE JOINT, EXT.THREAD,D=12MM-G3/8	1-369, 1-371, 1-373, 1-377, 1-379, 2-49, 2-171, 2-173, 2-175, 7-77, 7-81, 8-237, 8-239
90458-2963	ELBOW PIPE JOINT, EXT.THREAD,D=14MM-G3/8	7-81
90458-2964	ELBOW PIPE JOINT, EXT.THREAD, D=8MM-G1/8	7-47, 8-167
90458-2965	ELBOW PIPE JOINT, EXT.THREAD,D=14MM-G1/2	7-79
90458-2969	PRESSURE GAUGE, MAP-40-1-1/8-EN	11-25
90459-0080	RECORDER 6-CHANNEL, LOGOPRINT 500	9-149, 9-151
90459-0094	O-RING 133,07X1,78 MM	1-135, 1-137, 1-155, 1-157
90459-0098	THRUST BALL BEARING, 15X28X9 MM	1-135, 1-137
90459-0173	AIR GUN ASSEMBLY, CEJN SERIE 208	2-177
90459-0180	FLOW SWITCH, 0,1 - 2,5 L/MIN	7-19
90459-0181	PIPE SURFACE THERM., PT-100 -50° -+120°C	1-279, 1-281
90459-0182	INTERFACE CONNECTOR FOR TMCC2	9-23
90459-0183	TRANSMITTER , TRANS T02 PCP	9-149, 9-151
90459-0261	ETHERNET NETW. INTERFACE CARD, 01181-000	9-169
90459-0262	BACKPLANE CARD AR-MB7P	9-171
90459-0275	PC ENCLOSURE FLEX BOX ISIC, 02760-000	9-169
90459-0283	POWER SUPPLY UNIT, 02571-000	9-171
90459-0284	PROCESSOR BOARD CLIPS V, 02021-000	9-169
90459-0285	CD UNIT, 02413-000	11-67
90459-0287	DISPLAY UNIT 15", 02567-000	2-337
90459-0288	SLIM LINE TOUCH BEZEL 15", 1511	2-339
90459-0291	CABLE CD UNIT, 01310-000	9-169
90459-0307	PRESSURE GAUGE, 162838 MA-50-10-1/4-EN	7-79
90459-0363	COOLING UNIT, KB40A0721.03	9-173
90459-0401	DOUBLE ACTING, MINI-ISO, CYL. 25-320	2-297
90459-0462	CANISTER LY 500-10	2-37
90459-0472	KEY SAF.SW. AZ 16 02ZVRK-M20-2152-2254	1-7, 1-9, 1-139, 1-151, 1-153, 1-201, 1-421

Part No	Description	Page No
		8-111, 8-113
90459-0503	CYLINDER, ADVC-16-10-I-P	8-185, 8-197
90459-0586	SWIVEL FLANGE 50	1-19
90459-0587	DOUBLE ACTING, PROFILE, CYL 50-50	1-19
90459-0689	PRESSURE TRANSMITTER 0 - 0,6 BAR	1-143, 1-145
90459-0707	HEATING ELEMENT 1500W/220V	5-173, 5-175, 5-177
90459-0708	INTOUCH OEM 5000 V.7.0/7.1 HW KEY	9-149, 9-151
90459-0711	FLOW SENSOR FS-400 SERIES / 26440	1-235
90459-0713	DOUBLE ACTING, MINI-ISO, CYL 12-80	1-223
90459-0729	HEXAGONAL PROTECTIVE CAP GPN 1000	1-245, 1-247, 1-249, 1-251
90459-0799	SENSOR BRACKET SMBR-12 FOR CYL 12	1-223
90459-0802	RADIAL SEAL 55X75X10 MM	1-147
90459-0803	O-RING 355,19X3,53 MM	1-147
90459-0804	MOTOR B3/B5 CE CODE: 159353	1-147
90459-0805	BUSHING, 10X14X8 MM	1-199
90459-0829	PROX.SENSOR SMTO-4U-PS-K-LED-24	1-223
90459-0835	THERMO CONTACT PANEL, 16 CONTACTS 2 ROWS	9-71, 9-73
90459-0871	SEALING RING 18X30X7 MM	1-15, 1-17
90459-0941	QUICK COUPLING, PLCD 130-M8	2-239, 2-241
90459-0951	TRANSDUCER, BTL7-A110-M0400-B-S32	2-17, 2-19
90459-0959	DISTRIBUTOR BLOCK 1492-PD3163	9-123, 9-125
90459-0960	QUICK COUPLING, PLCD 200-M8	2-239, 2-241
90459-0969	COMP. SPRING A D22430, 1,6X11,6X58,5	5-83, 5-85, 5-87, 5-89
90459-0997	STRAIGHT COUPLING D=8-R1/4"	7-7, 7-9
90459-1000	LIGHT FIXTURE, RL 70CV-136/230V 50HZ	2-97
90459-1009	RUBBER STRIP, 1025088988	2-9, 2-133, 2-135, 2-137
90459-1018	ROD END,BALL JOINT EYE M10X1,25	1-199
90459-1037	CRIMP TOOL FOR COAX. CONN. HTG 58-901200	11-5
90459-1038	PRESSURE TRANSMITTER, 250BAR	2-83
90459-1045	HOOD, HDC HA3 TOVL 1XM20G	2-185, 2-187
90459-1126	PLASTIC HOSE PVC TRANSPARENT, 8X11MM	8-25
90459-1130	EM. STOP XAL-K178F	1-21
90459-1147	GEARS, WORM MOTOR VF30 F1-10 P63 B14 V6	2-349, 2-351
90459-1148	VARILIP 14X24X7 MM	1-165, 1-167, 1-169
90459-1174	O-RING 75,87X2,62 MM	1-15, 1-17
90459-1175	O-RING 418X3,0 MM	1-15, 1-17
90459-1189	O-RING 56,87X1,78 MM	1-223
90459-1223	PRESSURE GAUGE HYDRAULIC, 1184954.03-11	2-79
90459-1224	FILTER UNIT, MDF-BNHC-30-LB10-C1.0/B6	2-81
90459-1226	GEARS, WORM MOTOR VF 44P-10+BN71B 0.37KW	1-181, 1-183
90459-1227	MANIFOLD BLOCK, A1-17351	2-83
90459-1235	ANGLE SEAT VALVE, N.C. DN13 TYPE 2002	1-291

Part No	Description	Page No
90459-1241	ANGLE SEAT VALVE, TRI-CLAMP, N.C. DN20	1-307
90459-1254	TUBE FUSE, 4A 500V	9-127, 9-129, 10-9
90459-1297	RESISTANCE FIXED, 120 OHM, 0,25 W	6-77, 9-93, 9-97, 9-99
90459-1314	O-RING 491X3 MM	1-149
90459-1352	PCI COMMUNICATION INTERFACE PCI-1612B-A	9-169
90459-1359	FILTER 1 A, 250 VAC, FN 332-1/05	9-149, 9-151
90459-1395	SCREW HEX.SOCK.SET CONEPT.MS6SS M4X4 A2	1-19
90459-1411	O-RING 7,8X1,9 MM	3-15, 3-33
90459-1420	PROPORTIONAL VALVE 0 - 10V/0-6 BAR	1-257
90459-1424	CONN. STR., 6-G1/8, EXT. THREAD	1-263, 1-285, 2-37
90459-1425	CONN. T-PIPE 8	2-37
90459-1427	QUICK-RELEASE COUPLING, SS-QTM2-D-8M0-K2	2-37
90459-1430	QUICK-RELEASE COUPLING, SS-QTM2-D-8M0-K4	2-37
90459-1451	MALE INSERT HAN K 09 38 006 2611	9-29
90459-1452	FEMALE INSERT HAN K 09 38 006 2711	9-55, 9-57
90459-1467	FORCE GAUGE 0-250N, AFG 250N	11-5
90459-1472	FILTER, KW0604NP3	7-9
90459-1501	CABLE SEALING, 12023/I, ELFA. 44-625-78	2-117, 2-119, 8-143
90459-1506	ELBOW WITH TAILPIECE 10/10 MM	5-173, 5-175, 5-177
90459-1509	CYLINDER, ADVC-20-20-I-P	8-167
90459-1536	FLEXIBLE COUPLING DISC, 14 MM	2-31
90459-1544	HANDLE, GR/10	8-97
90459-1545	CARRIAGE, R2001-314-04	8-97
90459-1605	REDUCER 4-8	2-257, 2-259
90459-1617	TERMINAL BOX FL CAT5	2-199
90459-1621	CABLE, ETHERNET RJ 45 CONNECT. 1 M	9-149, 9-151
90459-1627	O-RING 114,02X1,78 MM	1-161, 1-163, 1-171, 1-173, 1-181, 1-183
90459-1650	VARILIP 30X40X7 MM	1-181, 1-183
90459-1686	O-RING 126,72X1,78 MM	1-161, 1-163
90459-1690	DIRECTIONAL VALVE, DG4V-3-6C-MUH-7-60-EN	2-83
90459-1728	SCREW ISO4029 M6X45 A4	1-175, 1-177
90459-1733	BELLOW COUPLING, 15X15 MM	4-295, 4-297
90459-1736	PURGE VALVE, 2RM-PG4L-SS	7-27
90459-1738	MANDATORY ACTION SIGN ISO, READ MAINTENA	9-149, 9-151
90459-1742	FEED THROUGH TERMINAL, 1024100	1-261, 1-329
90459-1812	CABLE, ETHERNET RJ 45 CONNECT. 8 M	2-185, 2-187, 2-189, 2-191
90459-1825	ELBOW WITH TAILPIECE 12/12 MM	1-375
90459-1848	TAPE, SAFETY WALK R25MM X 18,3M	8-111, 8-113
90459-1849	DOUBLE ACTING, SHUTTLE, CYL. 40-550	8-127
90459-1898	LIFTING EYE BOLT, VLBG(1)1.0T M12 TURN.	11-67
90459-1953	DOUBLE ACTING, MINI-ISO, CYL. 25-10	5-115, 5-117, 5-119
90459-1993	FINGERGUARD, 101116-03	2-309, 2-319
90459-1996	FILTER CULLIGAN REFILL LINE 10 760665	7-9
90459-2004	FILTER CARTRIDGE ION-EXCHANGE, 759807	7-9
90459-2096	GEARS, WORM MOTOR F2 15 P63 B14 B8 PV 75	8-247
90459-2101	CYLINDER, ADVC-80-25-I-P	8-167
90459-2102	CYLINDER, AEVC 100-25-I-P	8-167
90459-2106	CABLE CONNECTOR, C091 31D004 100 2	1-399, 1-401
90459-2117	ADAPTER PLATE SDE1-..-W.., 194297	2-161, 2-163, 2-165
90459-2122	THERMOCOUPLE, EN-5130060-0001	1-255
90459-2145	BACK-UP RING 43,5X1,4 MM	4-127
90459-2146	X-SEAL 42,52X2,62 MM	4-127
90459-2173	SEAL GLYDRING 32,5X40X3,2 MM	4-127
90459-2181	BELT TENSION METER, TSM 4	11-5
90459-2198	TIMING BELT T10X480X16 POLYURETHANE	8-163
90459-2246	END PLATE, MS4-AGB	2-47
90459-2247	BRACKET, MS4-WP	2-47
90459-2258	SEAL GLYDRING 25,1X30X2,2 MM	4-165, 4-167, 4-211, 4-213, 4-215, 4-217
90459-2323	REDUCER, M25/M20	1-147
90459-2338	FILTER, MS4-LF-1/4-CRV	2-47
90459-2363	O-RING MATERIAL 1,78 MM	4-155, 4-157, 4-159, 4-161
90459-2366	HOSE CLIP, (32)-35	2-69, 2-71, 2-249, 7-47
90459-2412	CONNECTOR 4 POLE + EARTH	2-311, 2-321
90459-2421	BASEPLATE, 7 SLOT CONTROLLOGIX CHASSIS	9-93
90459-2474	PLC,DIGIT. OUTPUT MODULE 16 PTS 10-31VDC	9-93
90459-2477	ETHERNET I/P BRIDGE MODULE, 1756-ENBT	9-93
90459-2481	PLC 16-AXIS SERCOS MOTION MODULE	9-93
90459-2487	REMOVABLE TERMINAL BLOCK 20 POINTS	9-93
90459-2488	REMOVABLE TERMINAL BLOCK 36 POINTS	9-93
90459-2519	OPEN STYLE TAP	9-77, 9-79, 9-81, 9-83, 9-85
90459-2530	DEVICENET CABLE THIN	6-77, 9-23, 9-71, 9-73
90459-2536	SERCOS CABLE 0.1M, 2090-SCEP0-1	9-37, 9-39, 9-89, 9-91
90459-2537	SERCOS CABLE 0.3M	9-89, 9-91
90459-2539	SERCOS CABLE 1.0M, 2090-SCEP1-0	9-39, 9-89, 9-91
90459-2540	SERCOS CABLE 3.0M, 2090-SCEP3-0	9-37, 9-39, 9-89, 9-91
90459-2546	POWER RAIL 8 AXIS	9-35
90459-2547	POWER RAIL SLOT FILLER MODULE, 2094-PRF	9-39, 9-89, 9-91
90459-2549	AC LINE FILTER 3-PHASE 30A, 2090-XXLF-X3	9-35, 9-89, 9-91
90459-2551	CONNECTOR, MOTOR FEEDBACK 15 PIN MALE	2-117, 2-119, 2-189, 2-191, 6-77
90459-2553	ELBOW PIPE JOINT 16 MM	9-19, 9-173
90459-2555	T-CONNECTION 16MM	9-173
90459-2557	BLIND PLUG 16 MM	9-173
90459-2566	MOTOR CABLE 16 AWG 2090-XXNPMP-16S15	2-117, 2-119, 6-77
90459-2577	MOTOR BRAKE CABLE 2090-UXNBMP-18S15	2-117, 2-119

Part No	Description	Page No
90459-2590	ROD END, CLEVIS WITH AXLE M8	8-153, 8-157, 8-159
90459-2594	SERVO MOTOR MPL-B680B-MX141	3-7, 3-9
90459-2609	BALL VALVE 3/8", 6A-V6LQ-SI-SSP-ALH	2-37
90459-2615	HOSE NIPPLE SS-6-HC-A-601	2-37
90459-2635	NUT, HEX.LOCK "CONELOCK" M6 DIN 980V	8-165
90459-2647	DOUBLE ACTING, SHUTTLE, CYL. 25-780	8-97
90459-2704	SNAP HOOK STAINLESS 50X5MM	8-251, 8-253
90459-2705	LIFTING EYE BOLT, M6X40MM	8-251, 8-253
90459-2769	ELBOW PIPE JOINT, EXT.THREAD,D=10MM-G1/2	7-7
90459-2826	GEARS, HELICAL MOTOR ME0102210012	8-163
90459-2843	HEATING CARTRIDGE, 800W 240V	8-165
90459-2938	POWER SUPPLY, 6EP1437-3BA00	9-49, 9-51
90459-2939	POWER SUPPLY UNIT 6EP1961-3BA00	9-53
90459-2959	COOLER, AIR14616.30.CU.10.AL.06.10.0150.	7-77
90459-3021	INK JET PRINTER A300 HS	11-67
90459-3068	NEUTRAL TERMINAL, 10203.8	9-29
90459-3080	HOOD HAN-BRID 3A 19 20 003 1443	2-185, 2-187, 2-189, 2-191
90459-3081	HOUSING HAN A 19 20 003 1250	2-185, 2-187, 2-189, 2-191
90459-3082	MALE INSERT HAN-BRID RJ45 09 12 003 3001	2-185, 2-187, 2-189, 2-191
90459-3083	FEMALE INSERT HAN-BRID RJ45 09 120032790	2-185, 2-187, 2-189, 2-191
90459-3145	FLASH MEMORY 64MBYTE, 1784-CF64	9-93
90459-3154	CABLE OLFLONPTFE 1X4,72 MM² YELLOW-GREEN	1-255
90459-3164	TUBE 14MM PA BLACK	2-249
90459-3165	CABLE OLFLON PTFE 1X4,72 MM² BLACK	1-255
90459-3179	GAS SPRING BRACKET, BES/AUG/06/001	8-265
90459-3181	GAS SPRING, G15-150-50N STAINLESS STEEL	8-265
90459-3182	GAS SPRING FITTING, AU16 STAINLESS STEEL	8-265
90459-3256	NYLON RETAINER, 82-32-301-12	9-135, 9-137
90459-3339	GASKET NBR/PTFE 17X24X2 MM 3/4"	7-17, 7-23
90459-3352	FLAT PIN SOCKET, 6,3X0,8	9-149, 9-151
90459-3370	DOUBLE ACTING, PROFILE,CYL 32-140	8-107, 8-109
90459-3388	SCRAPER, 10X16X4,7 MM	4-143, 4-145, 4-199, 4-201
90459-3449	VARIABLE FREQUENCY DRIVE 22A-A2P3N104	9-123, 9-125
90459-3450	VARIABLE FREQUENCY DRIVE 22A-A4P5N104	9-123, 9-125
90459-3458	FOOTPRINT FILTER 22-RF012-BL	9-135, 9-137
90459-3460	FOOTPRINT FILTER 22-RF010-AL	9-123, 9-125
90459-3618	HAND OPERATED CHAIN-HOIST, P.H.D. 250KG	11-19, 11-21
90459-3650	DOUBLE ACTING, MINI-ISO, CYL 25-40	1-199
90459-3682	ROTARY POSITION SENSOR RPN1A111	1-199
90459-3698	FILTER, 6 A, 250 VAC, FN2070M-6/06	9-27
90459-3709	CONNECTOR 3-POLE AMP 282087-1	1-199
90459-3759	TIMING BELT 5MR-550-25	4-291, 4-293
90459-3788	COMPRESSOR, 2BV5110-0ZH01-8S-Z	1-219
90459-3799	FUSE HOLDER, 1P MIDGET 30A 10*38 GSUS101	9-127, 9-129
90459-3832	VENTING BOX, P9852	8-111, 8-113
90459-3845	POWER SOCKET, Z-SD230	9-33
90459-3931	LINE FILTER, 3EP1, 3A 120/250 VAC	9-35
90459-3940	LEVER, GN 612-6-M16X1.5-A-NI	5-231, 5-233, 5-235, 5-237, 5-239, 5-241
90459-3957	TPOP QPICBDEOOOO	11-85
90459-4032	HYDR.ACC., SBO-210-1.4E1/112U-210AK	2-83
90459-4033	RECORDER 12-CHANNEL PAPERLESS FDA-APPR	9-149, 9-151
90459-4053	THERMOCOUPLE, 5110082-001	5-173, 5-175, 5-177
90459-4077	WIRE SEAL , AMP 281934	1-199
90459-4079	MINI MIC SRS, AMP 183035-1	1-199
90459-4090	GASKET FPM 61X107X4, KLINGER 6080.1925	1-219
90459-4148	CONN. STR., 1/2"-1/4 ISO 7/1, EXT. THREA	1-263
90459-4151	HOSE ASSEMBLY 12,7 X 304,8 MM	1-263
90459-4169	HOSE ASSEMBLY 919-1D-1D-8-8-5C-3800	1-305
90459-4179	GASKET 30,5X42X4 MM FDA	1-279, 1-281
90459-4186	REDUCER, M32/M25	1-219
90459-4233	DEVICENET MASTER MODULE	9-97, 9-99
90459-4274	SCR. CABLE 2X0,5MM2	1-387, 1-389
90459-4504	ROD END, ID=6MM, M6X1	4-305
90459-4505	ROD END, ID=6MM, M6X1 LH	4-305
90459-4511	CONN. ELBOW, 6	1-255
90459-4562	COMPRESSOR, 2BV500080H0200	1-207
90459-4576	O-RING 55X3 MM	5-225, 5-227, 5-229
90459-4577	O-RING 64X3 MM	5-213, 5-215, 5-217, 5-219, 5-221, 5-223
90459-4578	O-RING 78X3 MM	5-213, 5-215, 5-217, 5-219, 5-221, 5-223
90459-4579	O-RING 94X3 MM	5-213, 5-215, 5-217, 5-219, 5-221, 5-223
90459-4580	O-RING 165X4 MM	5-213, 5-215, 5-217, 5-219, 5-221, 5-223
90459-4585	RADIAL SEAL 25X52X7 MM DUST LIP	5-213, 5-215, 5-217, 5-219, 5-221, 5-223
90459-4586	RADIAL SEAL 30X55X7 MM DUST LIP	5-225, 5-227, 5-229
90459-4587	RADIAL SEAL 35X52X7 MM DUST LIP	5-213, 5-215, 5-217, 5-219, 5-221, 5-223
90459-4588	RADIAL SEAL 60X85X8 MM DUST LIP	5-213, 5-215, 5-217, 5-219, 5-221, 5-223
90459-4686	NON-RETURN VALVE, M12A-C6L-1-EPR-SS	1-291
90459-4705	LOCKING PLUG, S 103 A 053-130+ AND 90220	2-107
90459-4735	SCREW M6S ISO 4017 M8X10 A480	6-65, 6-71
90459-4810	PRESS TRANSD (DIFF) 0 - 2000PA, 2681-20C	1-387, 1-389
90459-4932	REAR CLEVIS FOOT MOUNTING , CRLBN-20/25	5-115, 5-117, 5-119
90459-4991	PRESSURE GAUGE, 9063064 D=40 MM	1-375
90459-5076	SET SCREW ISO4026 M4X5 HRC 45	2-251, 2-253
90459-5177	ANGLE SEAT VALVE W. FLANGES, N.O.8498668	2-23
90459-5178	ANGLE SEAT VALVE W. FLANGES, N.O.8498669	2-23

Part No	Description	Page No
90459-5181	GREASE LUBRICATION KIT , 400999139	11-5
90459-5187	CONDUCTIVITY TRANSMITTER CLM223-ID7105	9-149, 9-151
90459-5190	SLIM POWER RAIL,KINETIX,3 AXIS,2094-PRS3	9-89, 9-91
90459-5191	SLIM POW. RAIL, KINETIX, 4 AX, 2094-PRS4	9-37, 9-39
90459-5195	SLIM POWER RAIL,KINETIX,8 AXIS,2094-PRS8	9-89, 9-91
90459-5268	DOUBLE ACTING, MINI-ISO, CYL. 25-130	5-181, 5-183
90459-5278	BELLOW COUPLING, 24X28 MM	5-319
90459-5323	OVERLOAD PROTECTION, PKZM0-1	9-107
90459-5324	OVERLOAD PROTECTION, PKZM0-1,6	9-33, 9-107
90459-5325	OVERLOAD PROTECTION, PKZM0-2,5	9-107
90459-5326	OVERLOAD PROTECTION, PKZM0-4	9-107
90459-5328	OVERLOAD PROTECTION, PKZM0-10	9-107
90459-5330	OVERLOAD PROTECTION, PKZM0-16	9-107
90459-5333	OVERLOAD PROTECTION, PKZM0-32	9-33, 9-115
90459-5440	CONTACTOR 4KW 24VDC, DILM9-01	8-227, 8-229, 9-31, 9-107, 9-131, 9-141, 9-143
90459-5441	CONTACTOR 7,5KW 24VDC, DILM17-01	9-31, 9-107, 9-131, 9-141, 9-143
90459-5444	CONTACTOR 15KW 24VDC, DILM32-01	9-31, 9-115
90459-5471	STRAIGHT COUPLING INT, D=6 MM - G1/4	2-251, 2-253
90459-5472	FLOW CONTROL VALVE, CFM360612E	2-251, 2-253
90459-5503	FILTER HOUSING / IDL 11 GB 16 C2H	1-291
90459-5578	ACTUATOR/SENSOR CABLE PRKT 5-56/5M	2-161, 2-163, 2-165
90459-5581	TENSION SPRING 1,2X23X8,5	1-345, 1-347
90459-5635	HYDRAULIC TANK, 12 L, A1-19101+A3-16783	2-79
90459-5652	LUBRICATION BLOCK, HFS4666	6-85
90459-5687	FUSE 1 A 250 VAC	9-127, 9-129
90459-5811	RESIDUAL CURRENT DEVICE, FI-25/2/003-A	9-33, 9-149, 9-151
90459-5813	AUXILARY CONTACT, FAZ-XHI11	9-139
90459-5884	COMMONING BUSBAR, 3-P 3-PH 3X19 MOD 63A	9-33
90459-5886	POWER SUPPLY UNIT 115-230 VAC/24VDC100W	9-77, 9-79, 9-81, 9-83, 9-85
90459-5901	DIAPHRAGM, 425 EPM SIZE 15	1-293
90459-5968	WEAR RING 19X22X3,2 MM	4-173
90459-6019	PISTON SEAL STEPSEAL 11,5X19X3,2 MM	4-173
90459-6021	PISTON SEAL STEPSEAL 7,2X12X2,2 MM	4-173
90459-6022	PISTON SEAL STEPSEAL 14,5X22X3,2 MM	4-173
90459-6023	PISTON SEAL 13X19X3,2 MM	4-173
90459-6024	PISTON SEAL 16X22X3,2 MM	4-173
90459-6025	PISTON SEAL 6,2X12X3,2 MM	4-173
90459-6026	WEAR RING 16X19X3,2 MM	4-173
90459-6027	WEAR RING 9X12X3,2 MM	4-173
90459-6033	PROGRAMMING CABLE FOR PLUTO 20-070-56	10-3
90459-6084	WARNING SIGN ISO, HAZARDOUS ROTATING BEL	1-419
90459-6145	SCR. CABLE 4X6MM2	9-35
90459-6215	FLOW SWITCH BFS-10-N-G1/4-MS-NO-ST	1-257
90459-6472	HARD DISC 2,5" , 03589-002	9-169
90459-6473	HARDDISK COPYING TOOL, 03607-000	11-5
90459-6556	PLC DIGITAL INPUT 32PTS, 1756-IB32/B	9-93
90459-6559	PROCESSOR L63, SERIES B, 1756-L63/B	9-93
90459-6568	CONNECTOR M12 5-POLES FEMALE, RKCN5/7	2-117, 2-119
90459-6570	CONNECTOR M12 5-POLES MALE, RSCN5/7	4-249, 4-251, 4-253
90459-6616	FINGER PROTECTION IP20, NZM1-4-XIPA	7-11
90459-6617	COVER 4-POLE, NZM1-4-XKSA	7-11
90459-6618	CIRCUIT BREAKER, NZMB1-4-A100	7-11
90459-6620	HANDLE, NZM1-XTVDV	7-65, 7-67
90459-6624	FEMALE INSERT HAN E AV, 09 33 006 4735	9-19, 9-55, 9-71, 9-73
90459-6627	FEMALE INSERT HAN E AV, 09 33 024 4735	9-19, 9-71, 9-73
90459-6629	HOOD 10 B SIDE ENTRY, 19 30 010 1520	9-19
90459-6638	HOUSING 16B BULKHEAD, 09 30 016 0301	9-71, 9-73
90459-6639	HOUSING 24B BULKHEAD, 09 30 024 0301	9-19, 9-71, 9-73
90459-6821	MALE INSERT HAN 4A, 09 20 004 2611	2-185, 2-187
90459-6822	HOUSING 3A BULKHEAD, 09 20 003 0301	9-19
90459-6850	CONNECTION, PKZM0-XDM12	9-107
90459-6851	BASE UNIT, PKZM0-XDM32	9-107, 9-115
90459-6852	AUXILIARY CONTACT, DILA-XHI22	9-107, 9-141, 9-143
90459-6854	COMMONING BUSBAR, 3-P 3-PH 6 100A	9-139
90459-6855	COMMONING BUSBAR, 3-P 3-PH 12 100A	9-139
90459-6856	FEEDER BLOCK, FAZ/FIP-XVS-KL	9-139
90459-6857	BUSBAR, 3-P 12 100A	9-127, 9-129, 9-159
90459-6858	ETHERNET SW, FL SWITCH SF 8TX FROM V 14	9-149, 9-151
90459-6859	HOUS.SIZE 6-24B HAN-SNAP, 09 33 000 9980	9-21, 9-55, 9-57
90459-6903	HOOD SIZE 24B HAN-SNAP, 09 33 024 0401	9-21
90459-6904	HOOD SIZE 16B HAN-SNAP, 09 33 016 0401	9-29
90459-6950	GEARS, WORM MOTOR MC320P2T/15/B5D-SRD057	8-133
90459-6951	GEARS,WORM MOTOR MC 320P2T/15/B5S-SRD057	8-133
90459-6975	SOLENOID VALVE G1/4, 2401186082702400	1-351
90459-6977	SOLENOID VALVE G1/4, V04B286N-B423A	1-351
90459-7081	GLAND, EXTENDED, M16X1,5	1-387, 1-389
90459-7084	FILTER, CPDI0NJM1	7-21
90459-7110	BRACKET, 4224-50	1-375
90459-7174	MOTOR POWER CABLE 2090-XXNPMP-10S15	2-117, 2-119
90459-7175	MOTOR POWER CABLE 2090-XXNPMF-10S15/A	2-189, 2-191
90459-7176	MOTOR FEEDBACK CABLE 2090-XXNFMF-S15	2-189, 2-191
90459-7178	SERVO MOTOR MPL-B330P-SJ24AA	4-291, 4-293
90459-7195	STEPPER MOTOR HRA71-DLB04075	6-77
90459-7198	AUXILIARY BATTERY MODULE, IC693ACC302	9-77, 9-79, 9-81, 9-83, 9-85

Part No	Description	Page No
90459-7207	MOTOR FEEDBACK CABLE 2090-XXNFMP-S09/C	6-77
90459-7212	AXIS MODULE WITH INT. PS, 2094-BC04-M03-	9-89, 9-91
90459-7216	AXIS MODULE 650V, 21,2A, 2094-BM03-S	9-89, 9-91
90459-7228	ELECTRICAL EQUIPMENT SIGN, TEMPLATE	7-65, 7-67
90459-7229	IDENTIF. OF SINGLE CONDUCTORS, TEMPLATE	9-43, 9-67
90459-7267	POWER SUPPLY 24VDC, 1756-PB75/B	9-93
90459-7276	HOOD 24 B TOP ENTRY, 19 30 024 0428	11-89
90459-7280	AIR NOZZLE, 011	2-243, 2-245, 2-247
90459-7293	SET SCREW DIN 551M5X8 PA66	5-253, 5-255, 6-71
90459-7315	PUSH DYNAMOMETER 20 - 200N, DT120	11-5
90600-0203	COMMONING BUSBAR, 1-PH 85A	9-145, 9-147
90600-0412	CARRIAGE, SSR15XV1 QZ SS HH FMS	6-25, 6-27, 6-51, 6-53
90600-0415	GEARS, PLANETARY FC-A25G-29	6-17, 6-25, 6-27, 6-51, 6-53
90600-0460	INDUCTIVE SWITCH, E2A-M12KN05-M1-B1-TP	8-111, 8-113, 8-241
90600-0463	INDUCTIVE SWITCH,E2A-M12LN05-WP-B1-TP 5M	1-285, 1-341
90600-0464	INDUCTIVE SWITCH,E2A-M12LS02-WP-B1-TP 5M	5-181, 5-183
90600-0467	INDUCTIVE SWITCH,E2A-M18KS05-WP-B1-TP 6M	1-311
90600-0473	INDUCTIVE SWITCH E2A-S08KS01-WP-B1-TP 5M	1-287, 2-37, 2-129, 8-25
90600-0495	O-RING 4X2 MM	1-285, 1-305
90600-0614	BLANK PLUG, 16AMP-316-1/2"-3/4"-AR	1-285
90600-0657	SCREW UNC 1/4-20 X10	1-237, 1-239
90600-0724	FOOT 25000N, R0773 611223	2-9, 2-63, 2-133, 2-135, 2-137, 8-111, 8-113
90600-0731	ADJUSTABLE ELBOW CONNECTION,EXT 6-G1/4	1-257
90600-0753	SERVO MOTOR MPL-B430P-MJ22AA	6-77
90600-0775	BALL VALVE G1/4, 406F-1/4"	1-315, 2-9, 2-79, 2-239, 2-241
90600-0808	CAM ROLLER 12X30X40 MM, CFT 12 M UU N	6-19, 6-25, 6-27, 6-35, 6-51, 6-53
90600-0821	LEVEL PR.,LEVELFLEX-M FMP41C-AKTJKB11A2Y	1-305
90600-0847	SPHERICAL BEARING, S8-DNIRO BMF C1	6-25, 6-27
90600-0863	LINEAR UNIT, 7000 22000 2051	6-43, 6-45
90600-0975	HOSE GLAND W/O INSERT PG13,5 EXTENDED	1-255, 1-259
90600-0976	INSERT, SINGLE HOLE, HI.TEMP, EK153I9	1-255, 1-259
90600-1154	FLOW METER,D-6230-HGB-BB-AV-99-0-N2/IP65	1-257
90600-1199	VARISTOR MOV, 390KD07	9-95
90600-1200	SCREEN CLAMPING SADDLE, 790-108	9-77, 9-79, 9-81, 9-83, 9-85
90600-1201	BUSBAR U-SHAPED, 790-191	9-77, 9-79, 9-81, 9-83, 9-85
90600-1203	BUS BAR 3-POLE+AUX. CONT., B3.1/2-PKZ0	9-115
90600-1223	CPU374, ETHERNET COMMUNICATION	9-97, 9-99
90600-1454	SAFETY TIME RELAY, E1T-1.0S-24VDC	9-77, 9-79, 9-81, 9-83, 9-85
90600-1537	PLUG, EXT THREAD HEX SOCKET 0919 00 21	1-207
90600-1695	FLOW SWITCH 0,4 L/MIN, DW-K-A 0.4 L/MIN	2-243, 2-245, 2-247
90600-1712	PLUG, EXT. THREAD HEX. SOCKET 09190017	1-317
90600-1713	PLUG, EXT. G-THREAD, G3/4	1-219
90600-1738	WARNING SIGN ISO, ELECTRIC SHOCK	1-255
90600-1769	FLOW SENSOR, SFE1-LF-F200-HQ8-P2I-M12	2-161, 2-163, 2-165
90600-1842	VARIABLE FREQUENCY DRIVE 22A-D6P0N104	9-135, 9-137
90600-1847	ETHERNET SWITCH, FL SWITCH SFN 5TX	9-149, 9-151
90600-1946	VALVE, SEAT, 3A. 9613320304	1-309
90600-2007	HEATING ELEM.15KW 3X230/400V,T90600-2007	1-229
90600-2068	DELIVERED DESIGN SIGN, 90600-2068	9-67
90600-2253	COOLING UNIT, KT17.02.CA 0193	9-19
90600-2960	AIR FLOW SENSOR 0-30 M/S VENT-CAPTOR	1-235
90600-3050	REGULATOR, SA-235942A	2-47
90600-3188	MOTOR FEEDBACK CABLE 2090-XXNFMP-S07/C	2-117, 2-119
90600-3189	MOTOR FEEDBACK CABLE 2090-XXNFMP-S12/C	6-77
90600-3222	PILOTED FUNCTION VALVE G1/8, 7880 06 10	5-181, 5-183
90600-3313	BUSHING, 10X14X10 MM	1-53, 1-55, 1-57
90600-3339	PAPER REEL TROLLEY, TP A3	10-3
90600-3558	GASKET 16,2X21,8X4,45 MM 3/4"	1-291, 1-303, 1-305, 1-307
90600-3559	CLAMPING PIECE, 211290	1-291, 1-303, 1-305, 1-307
90600-3582	SPHERICAL BEARING, GE 6 TGR	4-93, 4-95, 4-97, 4-99, 6-11
90600-3595	CARRIAGE, SSR25XW1SSHHC1FME	6-33, 6-59
90600-3924	CONDUCTIVITY SENSOR CLS 54-ACS1022	1-309
90600-4048	LIGHT FIXTURE, TCH128 1XTL5-14W/830 HF	9-19
90600-4050	LIGHT FIXTURE, TCH128 1XTL5-28W/830 HF	9-49, 9-51
90600-4088	HOOK WRENCH SQUARE PIN, 282108	11-47
90600-4542	LOCK CAM, 1000-227-01	2-267, 2-287, 2-333
90600-4648	FUSE HOLDER CYLINDRICAL FUSE, CMS101SP	9-127, 9-129
90600-4649	FUSE HOLDER CYLINDRICAL FUSE, CMS102SPR	9-127, 9-129
90600-4650	FUSE HOLDER CYLINDRICAL FUSE, CMS103SP	9-127, 9-129
90600-5084	LEVER MECHANISM, 1125-SU404	2-267, 2-287, 2-313, 2-333
90600-5161	HANDLE, 116.11.644	9-149, 9-151
90600-5212	AXIS MOD. W. PS,2094-BC02-M02-S SERIES B	9-37, 9-39, 9-89, 9-91
90600-5214	AXIS MOD. KINETIX 6000,2094-BM01-S SER.B	9-89, 9-91
90600-5216	AXIS MOD. KINETIX 6000,2094-BM02-S SER.B	9-37, 9-39, 9-89, 9-91
90600-5249	FERRITE, B64290L616X38	9-37, 9-39, 9-77, 9-79, 9-81, 9-83, 9-85, 9-89, 9-91, 9-93
90600-5272	ROTARY DOOR HANDLE, NZM1-XTVDV-NA	7-65, 7-67
90600-5274	KEY FOR SAF.SW.TZRE024PG RC1635-103845 Z	2-105, 2-189, 2-191
90600-5275	KEY FOR SAF.SW.TZRE024PG RC1635-104068 Z	2-189, 2-191
90600-5307	SCRAPER, 45X53X7 MM	4-261, 4-273
90600-5611	SERVO MOTOR MPS-B560F-MJ52DF	5-319
90600-5704	BELLOW COUPLING, 19X19 MM	6-13
90600-5800	DOUBLE ACTING, PROFILE,CYL 50-25	5-301, 5-303
90600-5840	PLC DEVICEN. BR./SCAN MOD, 1756-DNB, D	9-93
90600-6015	VENTING VALVE, 12003 (+ 11163)	1-315

Part No	Description	Page No
90600-8386	LOCK HOUSING, 1121-SU887-B	2-267, 2-287, 2-313, 2-333
90600-8406	SPACER, 1000-S1455-SK	2-267, 2-287, 2-333
107426-0000 ..	GUIDE SLEEVE	4-127, 10-9
209183-0000 ..	RING	1-311
230551-0000 ..	GASKET	1-207
232979-0000 ..	PRESSURE ROLLER (PAK OF 10)	1-245, 1-247, 1-249, 1-251, 10-15, 10-17, 10-19, 10-21, 10-23, 10-25
236631-0000 ..	HANDLE	8-87, 8-89
236634-0000 ..	SHAFT	8-87, 8-89
239874-0000 ..	WASHER	4-261, 4-273
246513-0000 ..	BEARING	4-261, 4-273
247358-0000 ..	SHIFTER HANDLE	1-165, 1-167, 1-169
252766-0001 ..	INSULATING PIPE	5-199, 5-201, 5-203, 5-205, 5-207, 5-209
252766-0002 ..	INSULATING PIPE	5-199, 5-201, 5-203, 5-205, 5-207, 5-209
252766-0004 ..	INSULATING PIPE	5-199, 5-201, 5-203, 5-205, 5-207, 5-209
255978-0000 ..	FORK	1-245, 1-247, 1-249, 1-251
256628-0000 ..	PIECE	4-267, 4-269, 4-271, 4-279, 4-281, 4-283
256629-0001 ..	AXLE PIN	4-267, 4-269, 4-271, 4-279, 4-281, 4-283
257330-0000 ..	PRESSURE ROLLER (10 PCS)	1-245, 1-247, 1-249, 1-251, 10-15, 10-17, 10-19, 10-21, 10-23, 10-25
263311-0000 ..	WASHER	1-11
263655-0007 ..	SHAFT	1-61, 1-63, 1-65, 1-67, 1-69, 1-117, 1-119
263655-0009 ..	SHAFT	1-61, 1-63, 1-65, 1-67, 1-69, 1-117, 1-119
263655-0015 ..	SHAFT	1-117, 1-119
263673-0000 ..	GASKET	5-199, 5-201, 5-203, 5-205, 5-207, 5-209, 6-43, 6-45, 10-15, 10-17, 10-19, 10-21, 10-23, 10-25
266737-0000 ..	WASHER	1-345, 1-347
266739-0000 ..	CABLE GLAND	5-173, 5-175, 5-177
269151-0000 ..	SHAFT	1-53, 1-55, 1-57
269859-0000 ..	BRACKET	1-207
270927-0000 ..	SCREW	5-173, 5-175, 5-177
271860-0000 ..	CLAMP BLOCK	1-7, 1-9, 1-139, 1-151, 1-153, 1-201
272479-0000 ..	PRESSURE ROLLER (10PCS)	1-245, 1-247, 1-249, 1-251, 10-15, 10-17, 10-19, 10-21, 10-23, 10-25
272728-0000 ..	BARRIER	8-119, 11-75
273429-0000 ..	WASHER	1-229
273450-0000 ..	SIGN, AIR SPRAY	1-367
273452-0000 ..	SIGN, ROLLING MACHINE FOR FABRICS	1-367
273455-0000 ..	SIGN, COLD WATER	7-71, 7-73
273458-0000 ..	SIGN, AIR	7-79, 8-237, 8-239
273977-0000 ..	NUT	2-33, 11-69
273978-0000 ..	LEVEL GLAS	2-33, 11-69
273980-0000 ..	SPRING	2-33, 11-69
273981-0000 ..	GASKET	2-25
273985-0000 ..	CARRIAGE	11-73
273996-0000 ..	NUT	2-33, 11-69
276398-0000 ..	HEXAGON NIPPLE	2-239, 2-241
279008-0000 ..	BUSHING	1-165, 1-167, 1-169
294464-0000 ..	BASE PLATE	5-173, 5-175, 5-177
295377-0001 ..	HOOD	1-245, 1-247, 1-249, 1-251
295377-0003 ..	HOOD	1-245, 1-247, 1-249, 1-251
311103-0232 ..	PARALLEL PIN ISO 2338 3M6X8 A1	4-65, 4-67, 4-69, 4-71, 4-73
311103-0233 ..	PARALLEL PIN ISO 2338 3M6X10 A1	8-243
311103-0234 ..	PARALLEL PIN ISO 2338 3M6X12 A1	4-129, 4-131, 4-133, 4-187, 4-189, 4-191
311103-0235 ..	PARALLEL PIN ISO 2338 3M6X14 A1	1-199, 11-71
311103-0236 ..	PARALLEL PIN ISO 2338 3M6X16 A1	1-31, 1-33, 1-39, 1-41, 1-75, 1-77, 1-79, 1-87, 1-89, 1-91, 1-93, 4-51, 4-53, 4-55, 4-57, 4-59
311103-0238 ..	PARALLEL PIN ISO 2338 3M6X20 A1	1-53, 1-55, 1-57, 5-181, 5-183
311103-0267 ..	PARALLEL PIN ISO 2338 4M6X10 A1	4-123, 4-125, 4-183, 4-185
311103-0268 ..	PARALLEL PIN ISO 2338 4M6X12 A1	4-103, 4-109, 4-113, 5-91
311103-0269 ..	PARALLEL PIN ISO 2338 4M6X14 A1	6-55, 6-57
311103-0270 ..	PARALLEL PIN ISO 2338 4M6X16 A1	1-321, 1-323, 2-31, 8-171, 8-173
311103-0274 ..	PARALLEL PIN ISO 2338 4M6X25 A1	8-119, 8-129, 11-75
311103-0276 ..	PARALLEL PIN ISO 2338 4M6X30 A1	1-53, 1-55, 1-57
311103-0306 ..	PARALLEL PIN ISO 2338 5M6X12 A1	1-53, 1-55, 1-57, 4-227, 4-229
311103-0308 ..	PARALLEL PIN ISO 2338 5M6X16 A1	1-19, 4-115, 4-117, 4-119, 4-121, 4-143, 4-145, 4-175, 4-177, 4-179, 4-181, 4-199, 4-201
311103-0310 ..	PARALLEL PIN ISO 2338 5M6X20 A1	1-233, 4-231, 4-233, 4-235, 4-237
311103-0348 ..	PARALLEL PIN ISO 2338 6M6X10 A1	6-25, 6-27, 6-29, 6-31, 6-51, 6-53, 6-55, 6-57
311103-0351 ..	PARALLEL PIN ISO 2338 6M6X16 A1	1-19, 4-295, 4-297, 11-49
311103-0352 ..	PARALLEL PIN ISO 2338 6M6X18 A1	3-23
311103-0353 ..	PARALLEL PIN ISO 2338 6M6X20 A1	1-125, 1-127, 6-43, 6-45
311103-0354 ..	PARALLEL PIN ISO 2338 6M6X22 A1	4-291, 4-293
311103-0355 ..	PARALLEL PIN ISO 2338 6M6X25 A1	8-61
311103-0357 ..	PARALLEL PIN ISO 2338 6M6X30 A1	6-17, 6-59
311103-0359 ..	PARALLEL PIN ISO 2338 6M6X35 A1	11-63
311103-0361 ..	PARALLEL PIN ISO 2338 6M6X40 A1	8-169
311103-0399 ..	PARALLEL PIN ISO 2338 8M6X16 A1	4-231, 4-233, 4-235, 4-237
311103-0400 ..	PARALLEL PIN ISO 2338 8M6X18 A	4-223, 4-225
311103-0401 ..	PARALLEL PIN ISO 2338 8M6X20 A1	1-149, 2-133, 2-135, 2-137, 6-11, 6-17, 6-25, 6-27, 6-51, 6-53
311103-0402 ..	PARALLEL PIN ISO 2338 8M6X22 A1	4-231, 4-233, 4-235, 4-237
311103-0403 ..	PARALLEL PIN ISO 2338 8M6X25 A1	1-333, 1-335
311103-0404 ..	PARALLEL PIN ISO 2338 8M6X28 A1	6-11, 6-17, 6-51, 6-53
311103-0405 ..	PARALLEL PIN ISO 2338 8M6X30 A1	6-43, 6-45
311103-0407 ..	PARALLEL PIN ISO 2338 8M6X35 A1	5-211, 5-313, 5-315

Part No	Description	Page No
311103-0409 ..	PARALLEL PIN ISO 2338 8M6X40 A1	3-23
311103-0413 ..	PARALLEL PIN ISO 2338 8M6X50 A1	1-7, 1-9, 1-139, 1-151, 1-153, 1-201
311103-0454 ..	PARALLEL PIN ISO 2338 10M6X20 A1	5-283, 8-91, 8-93
311103-1274 ..	PARALLEL PIN ISO 2338 4M6X24 A1	1-61, 1-63, 1-65, 1-67, 1-69, 1-117, 1-119, 8-99, 8-101 8-107, 8-109
311103-1355 ..	PARALLEL PIN ISO 2338 6M6X24 A1	6-11, 8-179, 8-181, 8-189, 8-191, 8-241
311103-1403 ..	PARALLEL PIN ISO 2338 8M6X24 A1	1-321, 1-323, 6-13, 6-33
311103-1456 ..	PARALLEL PIN ISO 2338 10M6X24 A1	2-63, 3-15, 3-33
311111-0345 ..	SPRING PIN ISO 8752 6X32-ST	10-47
311112-0251 ..	SPRING PIN, ISO 8752 4X10-C	5-211
311112-0255 ..	SPRING PIN, ISO 8752 4X18-C	4-309
311112-0256 ..	SPRING PIN, ISO 8752 4X20-C	1-135, 1-137, 4-305, 4-307
311112-0258 ..	SPRING PIN, ISO 8752 4X24-C	4-305, 8-153, 8-157, 8-159, 8-243
311112-0262 ..	SPRING PIN, ISO 8752 4X32-C	1-165, 1-167, 1-169, 4-309
311112-0385 ..	SPRING PIN, ISO 8752 8X50-C	8-119, 11-75
311411-0152 ..	SPLIT PIN SP2X16RFR	11-53
311520-0320 ..	RIVET, BLANK 2,4X6	9-149, 9-151
311520-0329 ..	RIVET, BLANK 2,4X8	7-65, 7-67, 11-85
311521-0142 ..	RIVET, BLANK 3,2X6	10-3
311521-0143 ..	RIVET, BLANK 3,2X8	7-65, 7-67
312101-0293 ..	SCREW M6S M4X16 FZB	11-19, 11-21
312101-0325 ..	SCREW M6S M5X10 FZB	2-297
312101-0364 ..	SCREW M6S M6X10 FZB	9-121
312101-0370 ..	SCREW M6S M6X20 FZB	2-139
312101-0632 ..	SCREW M6S M16X60 FZB	8-41, 8-43
312101-0678 ..	SCREW M6S M20X70 FZB	10-43
312104-0461 ..	SCREW M6S M8X50H FZB	1-339, 2-235
312105-0285 ..	SCREW M6S ISO 4017 M4X6 A470	2-95, 4-93, 4-95, 4-97, 4-99, 5-181, 5-183
312105-0287 ..	SCREW M6S ISO 4017 M4X8 A470	1-13, 1-53, 1-55, 1-57, 1-147, 1-229, 1-237, 1-239, 1-265 1-287, 1-289, 1-419, 2-243, 2-245, 2-247, 4-27, 4-29, 4-39, 4-41, 4-51, 4-53, 4-55, 4-57, 4-59, 4-65 4-67, 4-69, 4-71, 4-73, 4-83, 4-85, 4-89, 4-91, 5-35, 5-37, 5-39, 5-95, 5-97, 5-169, 5-171, 5-231 5-233, 5-235, 5-237, 5-239, 5-241, 5-297, 5-299, 5-323, 5-325, 6-61, 6-63, 8-171, 8-173, 8-179 8-181, 8-189, 8-191, 8-245, 9-49, 9-51
312105-0289 ..	SCREW M6S H4X10 A4 70 ISO4017/DIN933	1-31, 1-33, 1-39, 1-41, 1-53, 1-55, 1-57, 1-75, 1-77 1-79, 1-87, 1-89, 1-91, 1-93, 1-143, 1-145, 1-161, 1-163, 1-193, 1-195, 1-257, 1-265, 2-229, 2-243 2-245, 2-247, 2-251, 2-253, 2-297, 2-309, 2-319, 3-27, 5-29, 5-31, 5-181, 5-183, 6-43, 6-45, 7-9 8-143, 8-265
312105-0291 ..	SCREW M6S ISO 4017 M4X12 A470	1-193, 1-195, 1-199, 1-257, 1-367, 2-293, 4-101, 4-105 4-107, 4-111, 4-115, 4-117, 4-119, 4-121, 4-143, 4-145, 4-175, 4-177, 4-179, 4-181, 4-199, 4-201 5-169, 5-171, 5-323, 5-325, 5-327, 6-51, 6-53, 8-163, 8-171, 8-173, 8-179, 8-181, 8-189, 8-191, 8-245
312105-0292 ..	SCREW M6S ISO 4017 M4X14 A470	1-421
312105-0293 ..	SCREW M6S ISO 4017 M4X16 A470	1-257, 1-351, 2-309, 2-319, 2-349, 2-351, 5-181, 5-183
312105-0295 ..	SCREW M6S ISO 4017 M4X20 A470	1-345, 1-347, 2-91, 4-141, 4-261, 4-263, 4-265, 4-267 4-269, 4-271, 4-273, 4-275, 4-277, 4-279, 4-281, 4-283, 5-243, 5-245, 8-31, 8-129
312105-0297 ..	SCREW M6S ISO 4017 M4X25 A470	4-309, 8-25
312105-0299 ..	SCREW M6S ISO 4017 M4X30 A470	6-43, 6-45, 8-135, 8-143, 8-245
312105-0301 ..	SCREW M6S ISO 4017 M4X35 A470	1-11, 1-257, 8-185, 8-197
312105-0303 ..	SCREW M6S ISO 4017 M4X40 A470	1-289, 8-105
312105-0323 ..	SCREW M6S ISO 4017 M5X8 A480	1-123, 1-161, 1-163, 1-215, 1-217, 4-165, 4-167, 4-211 4-213, 4-215, 4-217, 4-309, 5-253, 5-255, 5-297, 5-299, 5-331, 6-61, 6-63, 6-65, 6-81, 8-25, 8-91 8-93, 8-111, 8-113, 8-129, 8-143, 8-269, 9-49, 9-51, 11-15
312105-0325 ..	SCREW M6S ISO 4017 M5X10 A480	1-13, 1-15, 1-17, 1-53, 1-55, 1-57, 1-105, 1-107, 1-109 1-135, 1-137, 1-199, 2-47, 2-63, 4-27, 4-29, 4-39, 4-41, 4-63, 4-77, 4-93, 4-95, 4-97, 4-99, 4-249 4-251, 4-253, 5-17, 5-19, 5-131, 5-133, 5-135, 8-63, 11-11, 11-57, 11-59
312105-0327 ..	SCREW M6S ISO 4017 M5X12 A480	1-15, 1-17, 1-19, 1-31, 1-33, 1-39, 1-41, 1-47, 1-49, 1-53 1-55, 1-57, 1-75, 1-77, 1-79, 1-87, 1-89, 1-91, 1-93, 1-105, 1-107, 1-109, 1-135, 1-137, 1-171 1-173, 1-175, 1-177, 1-191, 1-223, 1-289, 1-319, 1-387, 1-389, 1-419, 2-75, 2-95, 2-161, 2-163 2-165, 2-243, 2-245, 2-247, 2-297, 4-7, 4-9, 4-11, 4-17, 4-19, 4-21, 4-27, 4-29, 4-39, 4-41, 4-81 4-83, 4-85, 4-89, 4-91, 4-93, 4-95, 4-97, 4-99, 4-101, 4-103, 4-105, 4-107, 4-109, 4-111, 4-113 4-263, 4-265, 4-275, 4-277, 5-283, 5-297, 5-299, 5-307, 5-313, 5-315, 5-323, 5-325, 5-331, 6-61 6-63, 6-81, 7-19, 7-23, 8-31, 8-61, 8-111, 8-113, 8-241, 8-301, 10-39
312105-0328 ..	SCREW M6S ISO 4017 M5X14 A480	1-419, 1-421, 4-7, 4-9, 4-11, 4-17, 4-19, 4-21, 4-27, 4-29 4-39, 4-41, 4-51, 4-53, 4-55, 4-57, 4-59, 4-65, 4-67, 4-69, 4-71, 4-73
312105-0329 ..	SCREW M6S ISO 4017 M5X16 A480	1-15, 1-17, 1-31, 1-33, 1-39, 1-41, 1-47, 1-49, 1-75, 1-77 1-79, 1-87, 1-89, 1-91, 1-93, 1-105, 1-107, 1-109, 1-113, 1-115, 1-125, 1-127, 1-155, 1-157, 1-191 1-333, 1-335, 1-345, 1-347, 1-419, 2-37, 2-133, 2-135, 2-137, 4-51, 4-53, 4-55, 4-57, 4-59, 4-65 4-67, 4-69, 4-71, 4-73, 4-231, 4-233, 4-235, 4-237, 4-263, 4-265, 4-275, 4-277, 5-307, 5-313 5-315, 5-331, 6-59, 6-81, 7-23, 8-97, 8-111, 8-113, 8-133
312105-0331 ..	SCREW M6S ISO 4017 M5X20 A480	1-7, 1-9, 1-47, 1-49, 1-105, 1-107, 1-109, 1-113, 1-115 1-125, 1-127, 1-135, 1-137, 1-139, 1-151, 1-153, 1-201, 1-345, 1-347, 1-419, 4-27, 4-29, 4-39 4-41, 4-51, 4-53, 4-55, 4-57, 4-59, 4-65, 4-67, 4-69, 4-71, 4-73, 4-231, 4-233, 4-235, 4-237, 4-291 4-293, 6-33, 6-51, 6-53, 8-179, 8-181, 8-189, 8-191
312105-0333 ..	SCREW M6S ISO 4017 M5X25 A480	1-263, 1-285, 2-179, 2-265, 2-267, 2-287, 2-303, 2-313 2-333, 4-309
312105-0335 ..	SCREW M6S ISO 4014 M5X30 A480	4-261, 4-273
312105-0337 ..	SCREW M6S ISO 4014 M5X35 A480	6-55, 6-57, 8-13
312105-0339 ..	SCREW M6S ISO 4014 M5X40 A480	7-9
312105-0340 ..	SCREW M6S ISO 4014 M5X45 A480	1-351, 2-243, 2-245, 2-247
312105-0341 ..	SCREW M6S ISO 4014 M5X50 A480	4-27, 4-29, 4-39, 4-41, 7-7, 8-167
312105-0362 ..	SCREW M6S ISO 4017 M6X8 A480	1-11, 1-53, 1-55, 1-57, 1-161, 1-163, 1-207, 1-237, 1-239 1-279, 1-281, 1-285, 1-317, 2-339, 2-343, 2-345, 4-143, 4-145, 4-199, 4-201, 4-261, 4-267, 4-269 4-271, 4-273, 4-279, 4-281, 4-283, 5-67, 5-69, 5-71, 5-73, 5-75, 5-211, 5-307, 5-313, 5-315, 8-133, 8-135

Part No	Description	Page No
312105-0364 ..	SCREW M6S ISO 4017 M6X10 A480	1-13, 1-53, 1-55, 1-57, 1-199, 1-333, 1-335, 1-399, 1-401 1-419, 2-185, 2-187, 2-291, 4-27, 4-29, 4-39, 4-41, 5-51, 5-53, 5-55, 5-67, 5-69, 5-71, 5-73, 5-75 5-131, 5-133, 5-135, 5-153, 5-155, 5-161, 5-163, 8-47, 8-63, 8-73, 8-91, 8-93, 8-131, 8-187, 8-195 ..... 8-251, 8-253, 9-49, 9-51, 9-149, 9-151
312105-0366 ..	SCREW M6S ISO 4017 M6X12 A480	1-19, 1-71, 1-73, 1-155, 1-157, 1-161, 1-163, 1-181, 1-183 1-193, 1-195, 1-199, 1-207, 1-215, 1-217, 1-223, 1-229, 1-257, 1-263, 1-287, 1-293, 1-311, 1-315 1-319, 1-327, 1-351, 1-355, 1-357, 1-387, 1-389, 1-419, 1-423, 2-47, 2-59, 2-63, 2-65, 2-69, 2-71 2-85, 2-97, 2-99, 2-101, 2-133, 2-135, 2-137, 2-139, 2-161, 2-163, 2-165, 2-185, 2-187, 2-215 2-217, 2-251, 2-253, 2-267, 2-269, 2-287, 2-307, 2-313, 2-317, 2-325, 2-329, 2-331, 2-333, 2-347 2-349, 2-351, 3-21, 4-7, 4-9, 4-11, 4-17, 4-19, 4-21, 4-155, 4-157, 4-159, 4-161, 4-223, 4-225 4-227, 4-229, 4-231, 4-233, 4-235, 4-237, 4-261, 4-273, 4-303, 5-17, 5-19, 5-35, 5-37, 5-39, 5-41 5-43, 5-65, 5-67, 5-69, 5-71, 5-73, 5-75, 5-95, 5-97, 5-105, 5-107, 5-115, 5-117, 5-119, 5-153 5-155, 5-161, 5-163, 5-231, 5-233, 5-235, 5-237, 5-239, 5-241, 5-253, 5-255, 5-273, 5-275, 5-277 5-307, 5-313, 5-315, 5-331, 6-11, 6-25, 6-27, 6-59, 6-81, 7-7, 7-9, 7-19, 7-29, 8-11, 8-25, 8-33 8-59, 8-65, 8-67, 8-69, 8-71, 8-87, 8-89, 8-99, 8-101, 8-103, 8-111, 8-113, 8-123, 8-133, 8-135 8-163, 8-171, 8-173, 8-179, 8-181, 8-189, 8-191, 8-199, 8-201, 8-231, 8-233, 8-235, 8-247, 8-251 ..... 8-253, 8-269, 9-149, 9-151, 11-11
312105-0367 ..	SCREW M6S ISO 4017 M6X14 A480	1-7, 1-9, 1-19, 1-139, 1-151, 1-153, 1-201, 1-399, 1-401 2-125, 2-145, 2-147, 2-323, 4-27, 4-29, 4-39, 4-41, 4-51, 4-53, 4-55, 4-57, 4-59, 4-65, 4-67, 4-69 4-71, 4-73, 5-145, 5-147, 5-149, 5-277, 5-309, 5-311, 5-317, 5-323, 5-325, 5-331, 6-59, 6-81, 8-25 ..... 8-31, 8-157, 8-159, 8-163, 8-245
312105-0368 ..	SCREW M6S ISO 4017 M6X16 A480	1-19, 1-53, 1-55, 1-57, 1-125, 1-127, 1-143, 1-145, 1-149 1-155, 1-157, 1-161, 1-163, 1-191, 1-193, 1-195, 1-207, 1-257, 1-317, 1-319, 1-341, 1-351, 1-367 1-375, 1-381, 1-399, 1-401, 1-419, 1-421, 2-9, 2-25, 2-35, 2-37, 2-47, 2-63, 2-89, 2-93, 2-95, 2-109 2-111, 2-113, 2-115, 2-125, 2-133, 2-135, 2-137, 2-161, 2-163, 2-165, 2-293, 2-309, 2-319, 2-343 2-345, 4-7, 4-9, 4-11, 4-17, 4-19, 4-21, 4-27, 4-29, 4-39, 4-41, 4-103, 4-109, 4-113, 4-143, 4-145 4-199, 4-201, 4-231, 4-233, 4-235, 4-237, 4-249, 4-251, 4-253, 4-307, 5-5, 5-7, 5-17, 5-19, 5-29 5-31, 5-35, 5-37, 5-39, 5-41, 5-43, 5-67, 5-69, 5-71, 5-73, 5-75, 5-95, 5-97, 5-105, 5-107, 5-115 5-117, 5-119, 5-145, 5-147, 5-149, 5-153, 5-155, 5-161, 5-163, 5-173, 5-175, 5-177, 5-181, 5-183 5-231, 5-233, 5-235, 5-237, 5-239, 5-241, 5-259, 5-261, 5-263, 5-265, 5-267, 5-269, 5-273, 5-275 5-279, 5-281, 5-289, 5-291, 5-293, 5-307, 5-309, 5-311, 5-313, 5-315, 5-317, 6-11, 6-23, 6-25, 6-27 6-51, 6-53, 7-7, 7-11, 7-23, 7-49, 7-51, 7-55, 7-69, 7-77, 7-79, 8-15, 8-97, 8-99, 8-101, 8-111 ..... 8-113, 8-121, 8-143, 8-147, 8-171, 8-173, 8-251, 8-253, 8-269, 9-173, 11-11, 11-83
312105-0370 ..	SCREW M6S ISO 4017 M6X20 A480	1-7, 1-15, 1-17, 1-53, 1-55, 1-57, 1-71, 1-73, 1-125, 1-127 1-135, 1-137, 1-161, 1-163, 1-165, 1-167, 1-169, 1-171, 1-173, 1-175, 1-177, 1-181, 1-183, 1-185 1-187, 1-189, 1-193, 1-195, 1-223, 1-231, 1-233, 1-287, 1-293, 1-321, 1-323, 1-333, 1-335, 1-341 1-349, 1-367, 1-387, 1-389, 1-399, 1-401, 1-419, 2-31, 2-63, 2-97, 2-221, 2-223, 2-231, 2-233 2-315, 2-349, 2-351, 4-83, 4-85, 4-89, 4-91, 4-129, 4-131, 4-133, 4-155, 4-157, 4-159, 4-161, 4-187 4-189, 4-191, 4-223, 4-225, 4-231, 4-233, 4-235, 4-237, 4-259, 4-305, 4-307, 5-29, 5-31, 5-65, 5-67 5-69, 5-71, 5-73, 5-75, 5-77, 5-79, 5-115, 5-117, 5-119, 5-145, 5-147, 5-149, 5-153, 5-155, 5-161 5-163, 5-169, 5-171, 5-211, 5-231, 5-233, 5-235, 5-237, 5-239, 5-241, 5-259, 5-261, 5-263, 5-265 5-267, 5-269, 5-279, 5-281, 6-11, 6-33, 6-43, 6-45, 6-51, 6-53, 7-71, 7-73, 8-15, 8-17, 8-27, 8-29 8-31, 8-73, 8-97, 8-107, 8-109, 8-121, 8-139, 8-145, 8-157, 8-159, 8-165, 8-169, 8-171, 8-173 ..... 8-175, 8-243, 8-247, 11-15, 11-19, 11-21
312105-0371 ..	SCREW M6S ISO 4017 M6X22 A480	.. 1-53, 1-55, 1-57, 1-155, 1-157, 1-199, 2-143, 8-19, 8-21
312105-0372 ..	SCREW M6S ISO 4017 M6X25 A480	1-53, 1-55, 1-57, 1-135, 1-137, 1-155, 1-157, 1-161, 1-163 1-181, 1-183, 1-191, 1-199, 1-283, 1-319, 1-341, 1-415, 2-31, 2-109, 2-111, 2-113, 2-115, 4-115 4-117, 4-119, 4-121, 4-175, 4-177, 4-179, 4-181, 4-305, 4-307, 4-309, 5-21, 5-23, 5-67, 5-69, 5-71 5-73, 5-75, 5-145, 5-147, 5-149, 5-173, 5-175, 5-177, 5-181, 5-183, 5-259, 5-261, 5-263, 5-265 5-267, 5-269, 5-277, 5-301, 5-303, 5-307, 5-309, 5-311, 5-313, 5-315, 5-317, 6-5, 6-7, 6-11, 6-33 ..... 6-43, 6-45, 6-59, 8-17, 8-129, 8-169, 8-241, 8-243, 10-45
312105-0374 ..	SCREW M6S ISO 4014 M6X30 A480	1-53, 1-55, 1-57, 2-349, 2-351, 5-65, 5-169, 5-171, 5-253 ..... 5-255, 5-259, 5-261, 5-263, 5-265, 5-267, 5-269, 6-43, 6-45, 8-87, 8-89, 8-265, 11-35, 11-71
312105-0376 ..	SCREW M6S ISO 4014 M6X35 A480	2-267, 2-287, 2-333, 5-29, 5-31, 5-67, 5-69, 5-71, 5-73 ..... 5-75, 5-77, 5-79, 5-131, 5-133, 5-135, 5-313, 5-315, 7-77, 8-241, 8-251, 8-253
312105-0378 ..	SCREW M6S ISO 4014 M6X40 A480	2-307, 4-295, 4-297, 4-299, 5-17, 5-19, 5-29, 5-31, 5-77 ..... 5-79, 5-317, 6-11, 6-43, 6-45
312105-0379 ..	SCREW M6S ISO 4014 M6X45 A480	..... 2-25, 5-65, 5-309, 5-311, 6-59
312105-0380 ..	SCREW M6S ISO 4014 M6X50 A480	..... 5-65, 8-241, 8-255
312105-0381 ..	SCREW M6S ISO 4014 M6X55 A480	1-143, 1-145, 1-225, 1-235, 1-321, 1-323, 2-69, 2-71 ..... 4-247, 5-313, 5-315, 8-251, 8-253
312105-0382 ..	SCREW M6S ISO 4014 M6X60 A480	..... 2-95, 5-65, 5-327, 6-11, 6-43, 6-45, 8-119, 11-75
312105-0383 ..	SCREW M6S ISO 4014 M6X65 A480	..... 2-349, 2-351, 8-163, 11-57, 11-59
312105-0384 ..	SCREW M6S ISO 4014 M6X70 A480	 8-241
312105-0388 ..	SCREW M6S ISO 4014 M6X90 A480	 1-383
312105-0447 ..	SCREW M6S ISO 4017 M8X12 A480	1-15, 1-17, 1-149, 1-155, 1-157, 1-161, 1-163, 1-257 1-315, 2-27, 2-133, 2-135, 2-137, 2-231, 2-233, 2-339, 2-343, 2-345, 2-349, 2-351, 3-5, 3-29 ..... 4-153, 4-209, 5-13, 5-15, 5-25, 5-27, 5-253, 5-255, 9-61
312105-0449 ..	SCREW M6S ISO 4017 M8X16 A480	1-15, 1-17, 1-105, 1-107, 1-109, 1-113, 1-115, 1-139 1-143, 1-145, 1-151, 1-153, 1-201, 1-207, 1-223, 1-227, 1-283, 1-315, 1-321, 1-323, 2-17, 2-19 2-23, 2-59, 2-83, 2-235, 2-273, 2-349, 2-351, 4-249, 4-251, 4-253, 4-291, 4-293, 5-25, 5-27, 5-35 5-37, 5-39, 5-95, 5-97, 5-105, 5-107, 5-253, 5-255, 5-259, 5-261, 5-263, 5-265, 5-267, 5-269 5-277, 5-279, 5-281, 5-283, 5-323, 5-325, 5-327, 6-59, 6-65, 7-49, 8-31, 8-33, 8-63, 8-87, 8-89 ..... 8-111, 8-113, 8-161, 8-199, 8-201, 9-69, 11-73, 11-85
312105-0451 ..	SCREW M6S ISO 4017 M8X20 A480	1-7, 1-9, 1-47, 1-49, 1-53, 1-55, 1-57, 1-61, 1-63, 1-65 1-67, 1-69, 1-87, 1-89, 1-91, 1-93, 1-105, 1-107, 1-109, 1-113, 1-115, 1-117, 1-119, 1-139, 1-143 1-145, 1-151, 1-153, 1-175, 1-177, 1-201, 1-207, 1-221, 1-229, 1-303, 1-319, 1-321, 1-323, 1-339 1-383, 2-23, 2-25, 2-27, 2-37, 2-75, 2-145, 2-147, 2-235, 2-315, 2-349, 2-351, 5-13, 5-15, 5-25 5-27, 5-35, 5-37, 5-39, 5-51, 5-53, 5-55, 5-95, 5-97, 5-105, 5-107, 5-211, 5-231, 5-233, 5-235 5-237, 5-239, 5-241, 5-253, 5-255, 5-259, 5-261, 5-263, 5-265, 5-267, 5-269, 5-273, 5-279, 5-281 5-307, 5-313, 5-315, 6-33, 6-43, 6-45, 6-59, 6-69, 6-71, 7-29, 7-49, 8-13, 8-63, 8-73, 8-77, 8-79 ..... 8-81, 8-97, 8-111, 8-113, 8-161, 8-163, 8-165, 8-167, 8-171, 8-173, 9-87, 11-63
312105-0452 ..	SCREW M6S ISO 4017 M8X22 A480	1-47, 1-49, 1-71, 1-73, 1-105, 1-107, 1-109, 1-155, 1-157 ..... 1-199, 2-75, 2-109, 2-111, 2-113, 2-115, 4-243, 4-245, 5-105, 5-107, 8-25, 8-111, 8-113

Part No	Description	Page No
312105-0453 ..	SCREW M6S ISO 4017 M8X25 A480	1-105, 1-107, 1-109, 1-161, 1-163, 1-175, 1-177, 1-209 1-211, 1-213, 1-219, 1-221, 1-225, 1-227, 1-229, 1-231, 1-235, 1-285, 1-319, 1-321, 1-323, 1-333 1-335, 2-9, 2-17, 2-19, 2-23, 2-63, 2-69, 2-71, 2-75, 2-133, 2-135, 2-137, 4-259, 4-267, 4-269 4-271, 4-279, 4-281, 4-283, 4-291, 4-293, 5-29, 5-31, 5-35, 5-37, 5-39, 5-51, 5-53, 5-55, 5-77, 5-79 5-95, 5-97, 5-179, 5-181, 5-183, 5-279, 5-281, 5-283, 6-21, 6-33, 6-37, 6-39, 6-51, 6-53, 7-9, 7-27 ..... 7-41, 7-43, 8-61, 8-73, 8-111, 8-113, 8-179, 8-181, 8-189, 8-191
312105-0455 ..	SCREW M6S ISO 4017 M8X30 A480	1-15, 1-17, 1-125, 1-127, 1-161, 1-163, 1-221, 1-245 1-247, 1-249, 1-251, 1-315, 1-319, 2-69, 2-71, 4-223, 4-225, 4-231, 4-233, 4-235, 4-237, 4-263 4-265, 4-267, 4-269, 4-271, 4-275, 4-277, 4-279, 4-281, 4-283, 5-5, 5-7, 5-17, 5-19, 5-51, 5-53 5-55, 5-105, 5-107, 5-115, 5-117, 5-119, 5-169, 5-171, 5-181, 5-183, 5-199, 5-201, 5-203, 5-205 5-207, 5-209, 5-231, 5-233, 5-235, 5-237, 5-239, 5-241, 5-301, 5-303, 6-5, 6-7, 6-43, 6-45, 8-25 ..... 8-57, 8-77, 8-79, 8-81, 8-125, 11-19, 11-21, 11-71, 11-83
312105-0457 ..	SCREW M6S ISO 4014 M8X35 A480	2-11, 2-75, 4-223, 4-225, 4-231, 4-233, 4-235, 4-237, 5-17 5-19, 5-35, 5-37, 5-39, 5-95, 5-97, 5-115, 5-117, 5-119, 5-199, 5-201, 5-203, 5-205, 5-207, 5-209 ..... 5-231, 5-233, 5-235, 5-237, 5-239, 5-241, 5-301, 5-303, 6-5, 6-7, 6-25, 6-27
312105-0459 ..	SCREW M6S ISO 4014 M8X40 A480	5-199, 5-201, 5-203, 5-205, 5-207, 5-209, 6-43, 6-45, 6-59, 11-73
312105-0460 ..	SCREW M6S ISO 4014 M8X45 A480	2-349, 2-351, 4-115, 4-117, 4-119, 4-121, 4-143, 4-145 ..... 4-175, 4-177, 4-179, 4-181, 4-199, 4-201, 4-231, 4-233, 4-235, 4-237, 6-19, 6-35
312105-0461 ..	SCREW M6S ISO 4014 M8X50 A480	..... 5-51, 5-53, 5-55, 5-115, 5-117, 5-119
312105-0462 ..	SCREW M6S ISO 4014 M8X55 A480	1-61, 1-63, 1-65, 1-67, 1-69, 1-117, 1-119, 1-315, 4-303 ..... 5-51, 5-53, 5-55, 5-115, 5-117, 5-119, 6-23, 6-41
312105-0463 ..	SCREW M6S ISO 4014 M8X60 A480	1-61, 1-63, 1-65, 1-67, 1-69, 4-259, 5-51, 5-53, 5-55, 5-105 ..... 5-107, 5-115, 5-117, 5-119, 6-71
312105-0464 ..	SCREW M6S ISO 4014 M8X65 A480	2-89, 4-231, 4-233, 4-235, 4-237, 5-17, 5-19, 5-41, 5-43 ..... 5-51, 5-53, 5-55, 5-105, 5-107, 5-115, 5-117, 5-119, 5-199, 5-201, 5-203, 5-205, 5-207, 5-209
312105-0465 ..	SCREW M6S ISO 4014 M8X70 A480	1-61, 1-63, 1-65, 1-67, 1-69, 5-41, 5-43, 5-51, 5-53, 5-55 ..... 5-115, 5-117, 5-119, 5-199, 5-201, 5-203, 5-205, 5-207, 5-209
312105-0466 ..	SCREW M6S ISO 4014 M8X75 A480	2-29, 5-41, 5-43, 5-51, 5-53, 5-55, 5-105, 5-107, 5-115 ..... 5-117, 5-119, 5-199, 5-201, 5-203, 5-205, 5-207, 5-209
312105-0467 ..	SCREW M6S ISO 4014 M8X80 A480	5-41, 5-43, 5-51, 5-53, 5-55, 5-105, 5-107, 5-115, 5-117 ..... 5-119, 5-199, 5-201, 5-203, 5-205, 5-207, 5-209, 5-253, 5-255, 6-65
312105-0469 ..	SCREW M6S ISO 4014 M8X90 A480	4-153, 4-209, 5-41, 5-43, 5-51, 5-53, 5-55, 5-105, 5-107 ..... 5-115, 5-117, 5-119, 5-289, 5-291, 5-293
312105-0471 ..	SCREW M6S ISO 4014 M8X100 A480	..... 5-199, 5-201, 5-203, 5-205, 5-207, 5-209, 5-277
312105-0475 ..	SCREW M6S ISO 4014 M8X120 A480	..... 5-277, 5-283
312105-0489 ..	SCREW M6S ISO 4017 M10X16 A480	..... 1-15, 1-17, 5-5, 5-7, 6-25, 6-27, 11-67, 11-79
312105-0491 ..	SCREW M6S ISO 4017 M10X20 A480	1-207, 1-305, 1-333, 1-335, 2-221, 2-223, 6-11, 6-13 ..... 6-33, 6-51, 6-53, 6-59, 6-71, 8-45, 8-107, 8-109, 11-73
312105-0493 ..	SCREW M6S ISO 4017 M10X25 A480	1-31, 1-33, 1-75, 1-77, 1-79, 1-207, 1-333, 1-335, 5-169 ..... 5-171, 5-211, 6-11, 11-63
312105-0495 ..	SCREW M6S ISO 4017 M10X30 A480	1-61, 1-63, 1-65, 1-67, 1-69, 1-117, 1-119, 1-207, 1-229 1-245, 1-247, 1-249, 1-251, 1-305, 2-213, 2-221, 2-223, 2-231, 2-233, 2-235, 4-103, 4-109, 4-113
312105-0497 ..	SCREW M6S ISO 4017 M10X35 A480	1-219, 3-13, 3-31, 5-253, 5-255, 5-319, 8-99, 8-101 ..... 8-187, 8-195
312105-0499 ..	SCREW M6S ISO 4014 M10X40 A480	..... 1-219, 5-211, 7-41, 7-43, 8-107, 8-109
312105-0503 ..	SCREW M6S ISO 4014 M10X60 A480	 10-3
312105-0505 ..	SCREW M6S ISO 4014 M10X70 A480	..... 1-333, 1-335
312105-0506 ..	SCREW M6S ISO 4014 M10X75 A480	..... 2-215, 2-217, 2-221, 2-223
312105-0507 ..	SCREW M6S ISO 4014 M10X80 A480	..... 5-283, 11-67
312105-0511 ..	SCREW M6S ISO 4014 M10X100 A480	 5-277
312105-0517 ..	SCREW M6S ISO 4014 M10X130 A480	 1-331
312105-0534 ..	SCREW M6S ISO 4017 M12X25 A480	..... 8-73, 9-49, 9-51, 11-45
312105-0536 ..	SCREW M6S ISO 4017 M12X30 A480	..... 1-15, 1-17, 2-231, 2-233
312105-0538 ..	SCREW M6S ISO 4017 M12X35 A480	..... 1-15, 1-17, 9-49, 9-51, 11-79
312105-0542 ..	SCREW M6S ISO 4014 M12X50 A480	..... 3-7, 3-9, 7-41, 7-43
312105-0546 ..	SCREW M6S ISO 4014 M12X70 A480	..... 3-7, 3-9
312105-0548 ..	SCREW M6S ISO 4014 M12X80 A480	..... 8-41, 8-43, 8-45, 8-111, 8-113
312105-0550 ..	SCREW M6S ISO 4014 M12X90 A480	 4-259
312105-0552 ..	SCREW M6S ISO 4014 M12X100 A480	 2-63
312105-0622 ..	SCREW M6S ISO 4017 M16X25 A480	..... 2-231, 2-233
312105-0629 ..	SCREW M6S ISO 4017 M16X45 A480	..... 2-221, 2-223
312105-0630 ..	SCREW M6S ISO 4017 M16X50 A480	 8-61
312105-0631 ..	SCREW M6S ISO 4014 M16X55 A480	 5-211
312105-0632 ..	SCREW M6S ISO 4014 M16X60 A480	 1-219
312105-0633 ..	SCREW M6S ISO 4014 M16X65 A480	..... 2-221, 2-223
312105-0634 ..	SCREW M6S ISO 4014 M16X70 A480	..... 10-43, 11-79
312105-0635 ..	SCREW M6S ISO 4014 M16X75 A480	 8-61
312105-0638 ..	SCREW M6S ISO 4014 M16X90 A480	..... 2-9, 2-133, 2-135, 2-137
312105-0640 ..	SCREW M6S ISO 4014 M16X100 A480	..... 8-41, 8-43, 8-111, 8-113
312105-0674 ..	SCREW M6S ISO 4017 M20X50 A480	..... 2-221, 2-223
312109-0335 ..	SCREW M6S ISO 4017 M5X30 A480	 4-299
312109-0374 ..	SCREW M6S ISO 4017 M6X30 A480	1-105, 1-107, 1-109, 1-171, 1-173, 1-191, 2-17, 2-19, 2-67 2-349, 2-351, 3-15, 3-33, 5-67, 5-69, 5-71, 5-73, 5-75, 5-105, 5-107, 5-145, 5-147, 5-149, 5-153 ..... 5-155, 5-161, 5-163, 5-313, 5-315, 6-33, 6-43, 6-45, 8-147, 8-171, 8-173, 8-185, 8-197, 10-47
312109-0376 ..	SCREW M6S ISO 4017 M6X35 A480	1-279, 1-281, 1-285, 1-351, 1-367, 1-375, 2-47, 2-161 2-163, 2-165, 5-67, 5-69, 5-71, 5-73, 5-75, 5-145, 5-147, 5-149, 5-169, 5-171, 6-11, 6-33, 6-43 ..... 6-45, 6-59, 8-171, 8-173
312109-0378 ..	SCREW M6S ISO 4017 M6X40 A480	1-283, 2-213, 2-221, 2-223, 2-349, 2-351, 4-291, 4-293 ..... 5-283, 8-241
312109-0380 ..	SCREW M6S ISO 4017 M6X50 A480	..... 2-31, 6-25, 6-27, 6-51, 6-53, 7-29
312109-0386 ..	SCREW M6S ISO 4017 M6X80 A480	..... 8-179, 8-181, 8-189, 8-191, 11-15
312109-0457 ..	SCREW M6S ISO 4017 M8X35 A480	1-221, 1-255, 5-51, 5-53, 5-55, 5-115, 5-117, 5-119, 5-199

Part No	Description	Page No
		5-201, 5-203, 5-205, 5-207, 5-209, 7-49
312109-0459 ..	SCREW M6S ISO 4017 M8X40 A480	1-39, 1-41, 1-87, 1-89, 1-91, 1-93, 1-161, 1-163, 4-267 4-269, 4-271, 4-279, 4-281, 4-283, 5-199, 5-201, 5-203, 5-205, 5-207, 5-209, 8-13, 11-63
312109-0460 ..	SCREW M6S ISO 4017 M8X45 A480	1-39, 1-41, 1-87, 1-89, 1-91, 1-93, 4-261, 4-273, 5-5, 5-7 5-115, 5-117, 5-119, 5-199, 5-201, 5-203, 5-205, 5-207, 5-209, 5-231, 5-233, 5-235, 5-237, 5-239, 5-241
312109-0461 ..	SCREW M6S ISO 4017 M8X50 A480	1-61, 1-63, 1-65, 1-67, 1-69, 1-117, 1-119, 5-51, 5-53, 5-55 5-199, 5-201, 5-203, 5-205, 5-207, 5-209
312109-0463 ..	SCREW M6S ISO 4017 M8X60 A480	5-169, 5-171, 5-199, 5-201, 5-203, 5-205, 5-207, 5-209 5-307, 5-313, 5-315
312109-0465 ..	SCREW M6S ISO 4017 M8X70 A480	6-59
312109-0467 ..	SCREW M6S ISO 4017 M8X80 A480	6-33
312109-0499 ..	SCREW M6S ISO 4017 M10X40 A480	2-81, 3-15, 3-33, 5-307, 5-313, 5-315, 5-319, 11-79
312109-0500 ..	SCREW M6S ISO 4017 M10X45 A480	5-307
312109-0501 ..	SCREW M6S ISO 4017 M10X50 A480	8-171, 8-173
312109-0544 ..	SCREW M6S ISO 4017 M12X60 A480	2-17, 2-19
312111-0297 ..	SCREW HEX.SOCK.HD.MC6S-TT 4X25 88 FZB	9-49, 9-51
312111-0327 ..	SCREW HEX.SOCK.HD.MC6S-TT 5X12 88 FZB	11-65
312111-0366 ..	SCREW HEX.SOCK.HD.MC6S-TT 6X12 88 FZB	9-97, 9-99, 9-135, 9-137, 11-63
312111-0497 ..	SCREW HEX.SOCK.HD.MC6S-TT 10X35 88 FZB	11-63
312111-0501 ..	SCREW HEX.SOCK.HD.MC6S-TT 10X50 88 FZB	11-65
312111-0630 ..	SCREW HEX.SOCK.HD.MC6S-TT 16X50 88 FZB	2-213, 2-215, 2-217, 2-221, 2-223, 2-229 2-231, 2-233
312115-0222 ..	SCREW ISO4762 M3X8 A4 80	2-117, 2-119, 4-309, 9-49, 9-51, 10-5
312115-0226 ..	SCREW ISO4762 M3X12 A4 80	5-173, 5-175, 5-177, 9-19
312115-0228 ..	SCREW ISO4762 M3X16 A4 80	1-345, 1-347, 5-231, 5-233, 5-235, 5-237, 5-239, 5-241, 5-307 5-313, 5-315, 8-31
312115-0230 ..	SCREW ISO4762 M3X20 A4 80	5-173, 5-175, 5-177
312115-0285 ..	SCREW ISO4762 M4X6 A4 80	1-375, 2-141, 4-115, 4-117, 4-119, 4-121, 4-143, 4-145, 4-175 4-177, 4-179, 4-181, 4-199, 4-201
312115-0287 ..	SCREW ISO4762 M4X8 A4 80	1-255, 1-285, 1-287, 4-51, 4-53, 4-55, 4-57, 4-59, 4-65, 4-67 4-69, 4-71, 4-73, 6-25, 6-27, 6-43, 6-45, 6-51, 6-53, 8-145, 8-169, 9-27, 9-35
312115-0289 ..	SCREW ISO4762 M4X10 A4 80	1-21, 4-51, 4-53, 4-55, 4-57, 4-59, 4-65, 4-67, 4-69, 4-71, 4-73
312115-0291 ..	SCREW ISO4762 M4X12 A4 80	1-235, 1-273, 2-31, 3-19, 3-35, 4-51, 4-53, 4-55, 4-57, 4-59 4-65, 4-67, 4-69, 4-71, 4-73, 4-223, 4-225, 5-83, 5-85, 5-87, 5-89, 6-25, 6-27, 8-125, 8-157, 8-159 8-169, 8-199, 8-201, 8-249
312115-0293 ..	SCREW ISO4762 M4X16 A4 80	4-51, 4-53, 4-55, 4-57, 4-59, 4-65, 4-67, 4-69, 4-71, 4-73, 4-223 4-225, 5-333, 6-51, 6-53, 6-83, 9-97, 9-99
312115-0295 ..	SCREW ISO4762 M4X20 A4 80	2-311, 2-321, 6-29, 6-31, 8-165
312115-0297 ..	SCREW ISO4762 M4X25 A4 80	4-129, 4-131, 4-133, 4-187, 4-189, 4-191, 5-243, 5-245, 9-19, 10-9
312115-0303 ..	SCREW ISO4762 M4X40 A4 80	1-237, 1-239
312115-0305 ..	SCREW ISO4762 M4X50 A4 80	1-257, 1-367, 1-375, 4-129, 4-131, 4-133, 4-187, 4-189, 4-191
312115-0323 ..	SCREW ISO4762 M5X8 A4 80	1-419, 3-23, 6-43, 6-45, 8-139, 8-145, 9-27, 9-35, 10-5
312115-0325 ..	SCREW ISO4762 M5X10 A4 80	1-193, 1-195, 2-95, 4-155, 4-157, 4-159, 4-161, 6-5, 6-7
312115-0327 ..	SCREW ISO4762 M5X12 A4 80	1-193, 1-195, 1-367, 1-375, 1-419, 1-421, 2-47, 2-161, 2-163 2-165, 2-229, 2-235, 2-267, 2-269, 2-273, 2-285, 2-287, 2-303, 2-307, 2-313, 2-315, 2-317, 2-329 2-331, 4-115, 4-117, 4-119, 4-121, 4-129, 4-131, 4-133, 4-155, 4-157, 4-159, 4-161, 4-175, 4-177 4-179, 4-181, 4-187, 4-189, 4-191, 4-231, 4-233, 4-235, 4-237, 5-131, 5-133, 5-135, 6-17, 6-25 6-27, 7-49, 7-57, 7-61, 7-65, 7-67, 8-25, 8-179, 8-181, 8-185, 8-189, 8-191, 8-197, 8-293, 8-295 8-303, 8-307, 9-89, 9-91, 9-123, 9-125, 9-135, 9-137, 11-45
312115-0328 ..	SCREW ISO4762 M5X14 A4 80	8-167
312115-0329 ..	SCREW ISO4762 M5X16 A4 80	1-321, 1-323, 4-27, 4-29, 4-39, 4-41, 4-129, 4-131, 4-133 4-155, 4-157, 4-159, 4-161, 4-187, 4-189, 4-191, 4-261, 4-273, 6-11, 6-25, 6-27, 6-77, 8-111 8-113, 8-179, 8-181, 8-189, 8-191, 9-63, 9-65, 9-67, 9-69
312115-0331 ..	SCREW ISO4762 M5X20 A4 80	1-7, 1-9, 1-139, 1-147, 1-151, 1-153, 1-193, 1-195, 1-201, 2-31 2-81, 4-51, 4-53, 4-55, 4-57, 4-59, 4-65, 4-67, 4-69, 4-71, 4-73, 4-155, 4-157, 4-159, 4-161, 8-169 8-219, 8-221, 8-223, 8-225, 8-227, 8-229, 9-27
312115-0333 ..	SCREW ISO4762 M5X25 A4 80	6-13, 6-33, 7-23, 8-167
312115-0335 ..	SCREW ISO4762 M5X30 A4 80	8-145, 10-5
312115-0337 ..	SCREW ISO4762 M5X35 A4 80	2-215, 2-217, 2-221, 2-223
312115-0339 ..	SCREW ISO4762 M5X40 A4 80	2-105
312115-0340 ..	SCREW ISO4762 M5X45 A4 80	2-105, 2-185, 2-187, 2-189, 2-191
312115-0362 ..	SCREW ISO4762 M6X8 A4 80	2-329, 2-331
312115-0364 ..	SCREW ISO4762 M6X10 A4 80	2-31, 4-231, 4-233, 4-235, 4-237, 7-31, 7-69, 8-131
312115-0366 ..	SCREW ISO4762 M6X12 A4 80	1-141, 1-419, 1-421, 3-23, 4-27, 4-29, 4-39, 4-41, 4-51, 4-53 4-55, 4-57, 4-59, 4-65, 4-67, 4-69, 4-71, 4-73, 4-291, 4-293, 5-13, 5-15, 5-25, 5-27, 5-181, 5-183 6-11, 6-33, 6-59, 8-61, 8-107, 8-109, 8-143, 8-161, 8-163, 8-171, 8-173, 9-43, 9-63, 9-65, 9-67, 9-69
312115-0367 ..	SCREW ISO4762 M6X14 A4 80	4-7, 4-9, 4-11, 4-17, 4-19, 4-21, 4-27, 4-29, 4-39, 4-41, 4-51 4-53, 4-55, 4-57, 4-59, 4-65, 4-67, 4-69, 4-71, 4-73, 8-237, 8-239
312115-0368 ..	SCREW ISO4762 M6X16 A4 80	1-135, 1-137, 2-63, 3-7, 3-9, 4-27, 4-29, 4-39, 4-41, 4-291 4-293, 4-305, 5-115, 5-117, 5-119, 6-11, 6-15, 6-17, 6-25, 6-27, 6-43, 6-45, 6-51, 6-53, 7-13, 7-15 7-17, 8-45, 8-99, 8-101, 8-135, 8-163, 8-167, 8-177, 8-179, 8-181, 8-189, 8-191, 8-247, 9-45
312115-0370 ..	SCREW ISO4762 M6X20 A4 80	1-147, 1-291, 1-321, 1-323, 4-27, 4-29, 4-39, 4-41, 4-51, 4-53 4-55, 4-57, 4-59, 4-65, 4-67, 4-69, 4-71, 4-73, 4-291, 4-293, 5-77, 5-79, 5-131, 5-133, 5-135 5-231, 5-233, 5-235, 5-237, 5-239, 5-241, 6-11, 6-17, 6-25, 6-27, 6-43, 6-45, 6-51, 6-53, 7-69 8-25, 8-153, 8-157, 8-159, 8-161, 8-165, 8-169, 8-185, 8-197, 8-241, 8-243, 9-21, 9-27, 9-35
312115-0372 ..	SCREW ISO4762 M6X25 A4 80	1-327, 1-383, 2-53, 2-81, 2-103, 2-195, 2-197, 2-199, 4-127 4-287, 5-131, 5-133, 5-135, 5-243, 5-245, 6-25, 6-27, 6-51, 6-53, 6-59, 8-167, 8-179, 8-181, 8-189 8-191, 8-251, 8-253
312115-0374 ..	SCREW ISO4762 M6X30 A4 80	1-19, 1-341, 1-387, 1-389, 4-27, 4-29, 4-39, 4-41, 5-115, 5-117 5-119, 6-43, 6-45, 6-47, 6-49, 6-59, 7-31, 8-107, 8-109, 8-153, 8-157, 8-159, 8-241
312115-0376 ..	SCREW ISO4762 M6X35 A4 80	3-15, 3-33, 4-51, 4-53, 4-55, 4-57, 4-59, 4-65, 4-67, 4-69, 4-71 4-73, 6-43, 6-45, 8-99, 8-101, 8-169, 8-235, 8-237, 8-239
312115-0378 ..	SCREW ISO4762 M6X40 A4 80	4-27, 4-29, 4-39, 4-41, 6-43, 6-45, 6-59, 8-103, 8-231, 8-233, 11-65
312115-0379 ..	SCREW ISO4762 M6X45 A4 80	1-237, 1-239, 4-155, 4-157, 4-159, 4-161, 9-19

Part No	Description	Page No
312115-0380 ..	SCREW ISO4762 M6X50 A4 80	4-127, 8-97
312115-0382 ..	SCREW ISO4762 M6X60 A4 80	2-95
312115-0447 ..	SCREW ISO4762 M8X12 A4 80	2-229, 4-115, 4-117, 4-119, 4-121, 4-175, 4-177, 4-179, 4-181
312115-0449 ..	SCREW ISO4762 M8X16 A4 80	4-93, 4-95, 4-97, 4-99, 5-35, 5-37, 5-39, 5-95, 5-97, 5-115, 5-117, 5-119, 8-137, 8-163, 8-179, 8-181, 8-189, 8-191, 8-199, 8-201
312115-0451 ..	SCREW ISO4762 M8X20 A4 80	1-87, 1-89, 1-91, 1-93, 2-75, 2-141, 3-19, 3-35, 4-261, 4-273, 5-27, 5-253, 5-255, 5-277, 6-25, 6-27, 6-51, 6-53, 8-199, 8-201, 11-83
312115-0453 ..	SCREW ISO4762 M8X25 A4 80	1-147, 1-321, 1-323, 6-13, 6-25, 6-27, 6-77, 7-45, 8-137
312115-0455 ..	SCREW ISO4762 M8X30 A4 80	5-211, 6-25, 6-27
312115-0457 ..	SCREW ISO4762 M8X35 A4 80	4-127, 8-13, 8-97
312115-0459 ..	SCREW ISO4762 M8X40 A4 80	4-127
312115-0460 ..	SCREW ISO4762 M8X45 A4 80	8-97
312115-0461 ..	SCREW ISO4762 M8X50 A4 80	4-127
312115-0463 ..	SCREW ISO4762 M8X60 A4 80	8-111, 8-113
312115-0464 ..	SCREW ISO4762 M8X65 A4 80	2-75
312115-0465 ..	SCREW ISO4762 M8X70 A4 80	4-267, 4-269, 4-271, 4-279, 4-281, 4-283, 8-167
312115-0467 ..	SCREW ISO4762 M8X80 A4 80	8-167
312115-0489 ..	SCREW ISO4762 M10X16 A4 80	6-11, 6-59, 8-251, 8-253
312115-0491 ..	SCREW ISO4762 M10X20 A4 80	2-181
312115-0493 ..	SCREW ISO4762 M10X25 A4 80	6-25, 6-27, 6-51, 6-53
312115-0497 ..	SCREW ISO4762 M10X35 A4 80	1-337, 5-279, 5-281, 5-283
312115-0499 ..	SCREW ISO4762 M10X40 A4 80	2-179, 6-25, 6-27, 6-51, 6-53
312115-0500 ..	SCREW ISO4762 M10X45 A4 80	5-283
312115-0501 ..	SCREW ISO4762 M10X50 A4 80	2-9, 8-163
312115-0546 ..	SCREW ISO4762 M12X70 A4 80	2-213, 2-221, 2-223, 2-229
312115-0630 ..	SCREW ISO4762 M16X50 A4 80	1-331
312115-0634 ..	SCREW ISO4762 M16X70 A4 80	2-221, 2-223
312121-0285 ..	SCREW ISO 1207 M4X6 4.8-5.8 Z.PL.	8-31, 9-121
312121-0289 ..	SCREW ISO 1207 M4X10 4.8-5.8 Z.PL.	9-49, 9-51, 9-77, 9-79, 9-81, 9-83, 9-85, 9-93, 9-97, 9-99, 9-121, 9-123, 9-125
312121-0321 ..	SCREW ISO 1207 M5X6 4.8-5.8 Z.PL.	9-53, 9-77, 9-79, 9-81, 9-83, 9-85, 9-97, 9-99, 9-109, 9-117, 9-119, 9-127, 9-129, 9-131, 9-139, 9-141, 9-143
312121-0323 ..	SCREW ISO 1207 M5X8 4.8-5.8 Z.PL.	9-49, 9-51, 9-123, 9-125, 9-135, 9-137
312121-0327 ..	SCREW ISO 1207 M5X12 4.8-5.8 Z.PL.	9-135, 9-137
312121-0364 ..	SCREW ISO 1207 M6X10 4.8-5.8 Z.PL.	2-53, 2-103, 2-195, 2-197, 2-199
312125-0220 ..	SCREW ISO 1207 M3X6 A4	2-39, 2-47, 2-161, 2-163, 2-165, 5-173, 5-175, 5-177, 7-19, 8-111, 8-113
312125-0222 ..	SCREW ISO 1207 M3X8 A4	1-341, 2-79, 2-185, 2-187, 2-189, 2-191, 8-135, 8-245, 8-285, 8-303, 8-307, 9-71, 9-73, 9-89, 9-91
312125-0224 ..	SCREW ISO 1207 M3X10 A4	9-19
312125-0226 ..	SCREW ISO 1207 M3X12 A4	2-117, 2-119, 2-185, 2-187
312125-0228 ..	SCREW ISO 1207 M3X16 A4	1-175, 1-177, 1-193, 1-195, 2-185, 2-187, 2-189, 2-191, 5-211
312125-0230 ..	SCREW ISO 1207 M3X20 A4	1-265, 2-99, 2-101, 5-5, 5-7, 8-135
312125-0232 ..	SCREW ISO 1207 M3X25 A4	2-39
312125-0234 ..	SCREW ISO 1207 M3X30 A4	5-5, 5-7
312125-0285 ..	SCREW ISO 1207 M4X6 A4	1-221, 1-225, 1-351, 2-17, 2-19, 2-89, 8-25, 8-111, 8-113, 8-131, 8-133, 8-135, 8-171, 8-173, 8-245, 9-19, 9-149, 9-151, 9-173
312125-0287 ..	SCREW ISO 1207 M4X8 A4	1-333, 1-335, 1-341, 2-99, 2-101, 2-185, 2-187, 2-189, 2-191, 2-309, 2-311, 2-319, 2-321, 5-231, 5-233, 5-235, 5-237, 5-239, 5-241, 5-307, 5-313, 5-315, 5-333, 6-83, 7-49, 7-79, 8-17, 8-31, 8-97, 8-135, 8-139, 8-143, 8-161, 8-235, 8-241, 9-19, 9-103
312125-0289 ..	SCREW ISO 1207 M4X10 A4	1-387, 1-389, 7-13, 7-15, 9-19, 9-71, 9-73, 9-87, 9-123, 9-125, 9-149, 9-151
312125-0291 ..	SCREW ISO 1207 M4X12 A4	8-139, 8-145
312125-0295 ..	SCREW ISO 1207 M4X20 A4	4-129, 4-131, 4-133, 4-187, 4-189, 4-191, 10-9
312125-0297 ..	SCREW ISO 1207 M4X25 A4	5-331, 6-81, 8-245
312125-0299 ..	SCREW ISO 1207 M4X30 A4	2-89, 5-327
312125-0323 ..	SCREW ISO 1207 M5X8 A4	1-229, 1-235, 1-269, 1-271, 1-273, 6-43, 6-45, 9-21
312125-0325 ..	SCREW ISO 1207 M5X10 A4	1-387, 1-389, 9-107, 9-115, 9-149, 9-151
312125-0327 ..	SCREW ISO 1207 M5X12 A4	2-81, 5-307, 5-313, 5-315, 11-71
312125-0331 ..	SCREW ISO 1207 M5X20 A4	1-229
312125-0335 ..	SCREW ISO 1207 M5X30 A4	9-149, 9-151
312125-0339 ..	SCREW ISO 1207 M5X40 A4	2-47
312125-0364 ..	SCREW ISO 1207 M6X10 A4	1-161, 1-163, 1-315, 1-333, 1-335, 1-387, 1-389, 2-55, 2-57, 2-117, 2-119, 2-239, 2-241, 3-13, 3-31
312125-0366 ..	SCREW ISO 1207 M6X12 A4	1-15, 1-17, 1-259, 1-327, 1-383, 2-221, 2-223, 8-95
312125-0370 ..	SCREW ISO 1207 M6X20 A4	2-25
312125-0374 ..	SCREW ISO 1207 M6X30 A4	1-259
312125-0376 ..	SCREW ISO 1207 M6X35 A4	8-135, 9-149, 9-151
312132-0284 ..	SLOTTED HEAD, PAN SCREW, MSCS M4X5	5-173, 5-175, 5-177
312132-0287 ..	SLOTTED HEAD, PAN SCREW, MSCS M4X8	9-149, 9-151
312132-0289 ..	SLOTTED HEAD, PAN SCREW, MSCS M4X10	2-79, 7-17
312141-0222 ..	SCREW ISO 2009 MFS M3X8 4.8 EL.PL	4-51, 4-53, 4-55, 4-57, 4-59, 4-65, 4-67, 4-69, 4-71, 4-73
312145-0222 ..	SCREW ISO 2009 MFS M3X8 A4	1-193, 1-195
312145-0224 ..	SCREW ISO 2009 MFS M3X10 A4	1-193, 1-195
312145-0226 ..	SCREW ISO 2009 MFS M3X12 A4	8-167
312145-0228 ..	SCREW ISO 2009 MFS M3X16 A4	1-285
312145-0234 ..	SCREW ISO 2009 MFS M3X30 A4	4-155, 4-157, 4-159, 4-161
312145-0236 ..	SCREW ISO 2009 MFS M3X35 A4	4-155, 4-157, 4-159, 4-161
312145-0238 ..	SCREW ISO 2009 MFS M3X40 A4	4-155, 4-157, 4-159, 4-161
312145-0285 ..	SCREW ISO 2009 MFS M4X6 A4	9-77, 9-79, 9-81, 9-83, 9-85
312145-0287 ..	SCREW ISO 2009 MFS M4X8 A4	4-7, 4-9, 4-11, 4-17, 4-19, 4-21, 4-81, 4-165, 4-167, 4-211, 4-213, 4-215, 4-217, 4-263, 4-265, 4-267, 4-269, 4-271, 4-275, 4-277, 4-279, 4-281, 4-283, 8-179, 8-181, 8-189, 8-191
312145-0289 ..	SCREW ISO 2009 MFS M4X10 A4	4-7, 4-9, 4-11, 4-17, 4-19, 4-21, 4-51, 4-53, 4-55, 4-57, 4-59, 4-65, 4-67, 4-69, 4-71, 4-73, 4-81, 4-83, 4-85, 4-89, 4-91

Part No	Description	Page No
312145-0291 ..	SCREW ISO 2009 MFS M4X12 A4	4-7, 4-9, 4-11, 4-17, 4-19, 4-21, 4-51, 4-53, 4-55, 4-57, 4-59, 4-65, 4-67, 4-69, 4-71, 4-73, 4-93, 4-95, 4-97, 4-99, 4-101, 4-105, 4-107, 4-111
312145-0323 ..	SCREW ISO 2009 MFS M5X8 A4	4-115, 4-117, 4-119, 4-121, 4-143, 4-145, 4-175, 4-177, 4-179, 4-181, 4-199, 4-201
312145-0327 ..	SCREW ISO 2009 MFS M5X12 A4	8-111, 8-113
312145-0380 ..	SCREW ISO 2009 MFS M6X50 A4	11-71
312155-0220 ..	SCREW DIN 7991 MF6S M3X6 A4 70	8-145
312155-0226 ..	SCREW DIN 7991 MF6S M3X12 A4 70	6-43, 6-45, 8-145, 8-185, 8-197
312155-0285 ..	SCREW DIN 7991 MF6S M4X6 A4 70	4-155, 4-157, 4-159, 4-161, 9-35, 11-11
312155-0287 ..	SCREW DIN 7991 MF6S M4X8 A4 70	4-51, 4-53, 4-55, 4-57, 4-59, 4-65, 4-67, 4-69, 4-71, 4-73 4-93, 4-95, 4-97, 4-99, 4-129, 4-131, 4-133, 4-143, 4-145, 4-155, 4-157, 4-159, 4-161, 4-187, 4-189 4-191, 4-199, 4-201, 5-29, 5-31, 5-77, 5-79, 5-83, 5-231, 5-233, 5-235, 5-237, 5-239, 5-241, 5-243, 5-245, 8-167, 8-179, 8-181, 8-189, 8-191
312155-0289 ..	SCREW DIN 7991 MF6S M4X10 A4 70	2-273, 4-7, 4-9, 4-11, 4-17, 4-19, 4-21, 5-29, 5-31, 5-243, 5-245, 6-11, 8-25, 8-143, 8-167
312155-0291 ..	SCREW DIN 7991 MF6S M4X12 A4 70	2-273, 6-29, 6-31, 6-55, 6-57, 8-169, 9-103
312155-0293 ..	SCREW DIN 7991 MF6S M4X16 A4 70	5-243, 5-245
312155-0295 ..	SCREW DIN 7991 MF6S M4X20 A4 70	4-223, 4-225, 8-23
312155-0297 ..	SCREW DIN 7991 MF6S M4X25 A4 70	5-169, 5-171, 6-85, 8-23
312155-0299 ..	SCREW DIN 7991 MF6S M4X30 A4 70	8-23
312155-0323 ..	SCREW DIN 7991 MF6S M5X8 A4 70	4-51, 4-53, 4-55, 4-57, 4-59, 4-65, 4-67, 4-69, 4-71, 4-73 5-145, 5-147, 5-149, 5-309, 5-311, 5-317, 8-147, 8-169, 11-15
312155-0325 ..	SCREW DIN 7991 MF6S M5X10 A4 70	1-135, 1-137, 1-199, 1-421, 4-51, 4-53, 4-55, 4-57, 4-59, 4-65, 4-67, 4-69, 4-71, 4-73, 4-129, 4-131, 4-133, 4-187, 4-189, 4-191, 6-71
312155-0327 ..	SCREW DIN 7991 MF6S M5X12 A4 70	4-51, 4-53, 4-55, 4-57, 4-59, 4-65, 4-67, 4-69, 4-71, 4-73 4-263, 4-265, 4-275, 4-277, 5-83, 5-85, 5-87, 5-89, 5-231, 5-233, 5-235, 5-237, 5-239, 5-241, 8-165
312155-0329 ..	SCREW DIN 7991 MF6S M5X16 A4 70	1-7, 1-9, 1-139, 1-151, 1-153, 1-201, 2-63, 2-267, 2-287, 2-313, 2-333, 5-259, 5-261, 5-263, 5-265, 5-267, 5-269, 6-25, 6-27
312155-0331 ..	SCREW DIN 7991 MF6S M5X20 A4 70	8-127
312155-0339 ..	SCREW DIN 7991 MF6S M5X40 A4 70	4-27, 4-29, 4-39, 4-41
312155-0364 ..	SCREW DIN 7991 MF6S M6X10 A4 70	1-141, 8-183, 8-193
312155-0366 ..	SCREW DIN 7991 MF6S M6X12 A4 70	5-115, 5-117, 5-119, 5-285, 8-111, 8-113, 8-141, 8-169, 11-63
312155-0368 ..	SCREW DIN 7991 MF6S M6X16 A4 70	1-285, 2-349, 2-351, 5-307, 5-313, 5-315, 8-15, 8-255, 11-15
312155-0370 ..	SCREW DIN 7991 MF6S M6X20 A4 70	2-75, 5-29, 5-31, 5-77, 5-79, 8-25, 8-127
312155-0376 ..	SCREW DIN 7991 MF6S M6X35 A4 70	5-29, 5-31
312155-0378 ..	SCREW DIN 7991 MF6S M6X40 A4 70	2-273, 5-29, 5-31, 5-289, 5-291, 5-293
312155-0379 ..	SCREW DIN 7991 MF6S M6X45 A4 70	5-77, 5-79
312155-0380 ..	SCREW DIN 7991 MF6S M6X50 A4 70	5-29, 5-31
312155-0449 ..	SCREW DIN 7991 MF6S M8X16 A4 70	1-53, 1-55, 1-57, 2-75, 5-105, 5-107, 5-259, 5-261, 5-263, 5-265, 5-267, 5-269, 5-307, 5-313, 5-315, 8-15, 8-137
312155-0451 ..	SCREW DIN 7991 MF6S M8X20 A4 70	2-75, 8-15
312155-0453 ..	SCREW DIN 7991 MF6S M8X25 A4 70	5-231, 5-233, 5-235, 5-237, 5-239, 5-241, 5-285
312155-0455 ..	SCREW DIN 7991 MF6S M8X30 A4 70	5-115, 5-117, 5-119
312155-0459 ..	SCREW DIN 7991 MF6S M8X40 A4 70	5-51, 5-53, 5-55, 5-115, 5-117, 5-119
312155-0461 ..	SCREW DIN 7991 MF6S M8X50A4 70	5-115, 5-117, 5-119
312155-0491 ..	SCREW DIN 7991 MF6S M10X20 A4 70	8-97
312155-0493 ..	SCREW DIN 7991 MF6S M10X25 A4 70	8-111, 8-113
312155-0495 ..	SCREW DIN 7991 MF6S M10X30 A4 70	5-169, 5-171, 5-307, 5-313, 5-315
312155-0499 ..	SCREW DIN 7991 MF6S M10X40 A4 70	5-29, 5-31, 5-77, 5-79
312155-0540 ..	SCREW DIN 7991 MF6S M12X40 A4 70	5-169, 5-171
312156-0370 ..	SCREW EN 10642 MF6S M6X20 A470	1-331
312180-0364 ..	SCREW ISO7379 H6X10	3-15, 3-33, 6-25, 6-27, 6-51, 6-53
312180-0366 ..	SCREW ISO7379 H6X12	8-19, 8-21, 8-73, 8-255
312180-0489 ..	SCREW ISO7379 H10X16	8-87, 8-89
312180-0491 ..	SCREW ISO7379 H10X20	8-157, 8-159
312180-0534 ..	SCREW ISO7379 H12X25	1-331
312230-0150 ..	SCREW HEX.HEAD WOOD T6S 10X160 SS	1-423
312306-0546 ..	SCREW ISO4026 M12X70 FZB	11-55
312311-0327 ..	SCREW ISO4028 M5X12 FZB	2-179
312311-0329 ..	SCREW ISO4028 M5X16 FZB	1-333, 1-335
312311-0372 ..	SCREW ISO4028 M6X25 FZB	8-241
312311-0491 ..	SCREW ISO4028 M10X20 FZB	8-41, 8-43
312318-0220 ..	SCREW ISO4029 M3X6 A4	5-321, 8-247
312318-0283 ..	SCREW ISO4029 M4X4 A4	6-11, 8-169, 8-241
312318-0284 ..	SCREW ISO4029 M4X5 A4	8-171, 8-173
312318-0285 ..	SCREW ISO4029 M4X6 A4	2-39, 4-7, 4-9, 4-11, 4-17, 4-19, 4-21, 4-51, 4-53, 4-55, 4-57, 4-59, 4-63, 4-65, 4-67, 4-69, 4-71, 4-73, 4-77, 4-83, 4-85, 4-89, 4-91, 11-41
312318-0287 ..	SCREW ISO4029 M4X8 A4	1-53, 1-55, 1-57, 1-343, 4-93, 4-95, 4-97, 4-99, 4-107, 4-111, 4-227, 4-229, 8-15, 8-75, 8-155
312318-0289 ..	SCREW ISO4029 M4X10 A4	4-267, 4-269, 4-271, 4-279, 4-281, 4-283, 8-73
312318-0291 ..	SCREW ISO4029 M4X12 A4	1-315
312318-0320 ..	SCREW ISO4029 M5X5 A4	4-51, 4-53, 4-55, 4-57, 4-59, 4-65, 4-67, 4-69, 4-71, 4-73
312318-0321 ..	SCREW ISO4029 M5X6 A4	11-29, 11-31
312318-0323 ..	SCREW ISO4029 M5X8 A4	1-123, 3-19, 3-35, 4-51, 4-53, 4-55, 4-57, 4-59, 4-65, 4-67, 4-69, 4-71, 4-73, 4-93, 4-95, 4-97, 4-99, 4-101, 4-105, 4-249, 4-251, 4-253, 5-17, 5-19
312318-0325 ..	SCREW ISO4029 M5X10 A4	2-297, 4-51, 4-53, 4-55, 4-57, 4-59, 4-65, 4-67, 4-69, 4-71, 4-73
312318-0329 ..	SCREW ISO4029 M5X16 A4	4-83, 4-85, 4-89, 4-91, 4-129, 4-131, 4-133, 4-187, 4-189, 4-191, 5-83, 5-85, 5-87, 5-89, 8-165
312318-0331 ..	SCREW ISO4029 M5X20 A4	5-85, 5-87, 5-89
312318-0362 ..	SCREW ISO4029 M6X8 A4	1-165, 1-167, 1-169, 3-21, 4-295, 4-297, 5-5, 5-7, 5-17, 5-19, 5-169, 5-171, 5-307, 5-313, 5-315, 8-25, 8-107, 8-109, 8-125, 8-179, 8-181, 8-189, 8-191
312318-0364 ..	SCREW ISO4029 M6X10 A4	2-11
312318-0366 ..	SCREW ISO4029 M6X12 A4	8-27, 8-29, 8-75, 8-155
312318-0368 ..	SCREW ISO4029 M6X16 A4	5-231, 5-233, 5-235, 5-237, 5-239, 5-241, 8-57, 8-161, 8-241

Part No	Description	Page No
312318-0370 ..	SCREW ISO4029 M6X20 A4	5-231, 5-233, 5-235, 5-237, 5-239, 5-241, 8-129, 9-135, 9-137
312318-0372 ..	SCREW ISO4029 M6X25 A4	2-181
312318-0376 ..	SCREW ISO4029 M6X35 A4	1-193, 1-195
312318-0443 ..	SCREW ISO4029 M8X8 A4	2-349, 2-351, 8-87, 8-89
312318-0449 ..	SCREW ISO4029 M8X16 A4	4-263, 4-265, 4-267, 4-269, 4-271, 4-275, 4-277, 4-279, 4-281, 4-283
312318-0453 ..	SCREW ISO4029 M8X25 A4	1-337, 2-213, 2-215, 2-217, 2-221, 2-223, 2-231, 2-233
312318-0455 ..	SCREW ISO4029 M8X30 A4	8-111, 8-113
312502-0120 ..	DRIVE SCREW ROUND HEAD KDS 0X5	1-367, 1-375, 2-47, 2-161, 2-163, 2-165, 7-71, 7-73, 7-77, 7-79
312503-0225 ..	TAPPING SCREW ISO 7049-ST2,9X9,5-C-Z	2-39
312503-0229 ..	TAPPING SCREW ISO 7049-ST2,9X16-C-Z	9-123, 9-125
312503-0275 ..	TAPPING SCREW ISO 7049-ST3,5X6,5-C-Z	8-131
312504-0348 ..	TAPPING SCREW ISO 7049-A2-ST4,2X25-C-Z	2-267, 2-287, 2-313, 2-333
312601-0316 ..	HEXAGON NUT, DIN 934 M6 8 FZB	9-49, 9-51, 9-105, 9-111, 9-113, 9-123, 9-125, 9-135, 9-137
312601-0322 ..	HEXAGON NUT, DIN 934 M12 8 FZB	3-7, 3-9
312601-0324 ..	HEXAGON NUT, DIN 934 M16 8 FZB	8-41, 8-43
312602-0312 ..	HEXAGON NUT, EN 24032 M6M M4 NIPLBR	11-57, 11-59
312602-0316 ..	NUT, EN 24032 M6M M6 NIPLBR	10-47
312602-0318 ..	HEXAGON NUT, EN 24032 M6M M8 NIPLBR	10-47
312605-0310 ..	HEXAGON NUT, M6M M3 A280	1-265, 7-11, 8-135, 8-285, 9-19, 9-149, 9-151
312605-0312 ..	HEXAGON NUT, M6M M4 A280	1-11, 1-13, 1-53, 1-55, 1-57, 1-193, 1-195, 1-225, 1-255, 1-263, 1-321, 1-323, 1-345, 1-347, 1-351, 2-89, 2-273, 2-279, 2-349, 2-351, 4-93, 4-95, 4-97, 4-99, 4-141, 4-231, 4-233, 4-235, 4-237, 4-249, 4-251, 4-253, 4-267, 4-269, 4-271, 4-279, 4-281, 4-283, 5-323, 5-325, 5-331, 6-81, 8-23, 8-31, 8-65, 8-67, 8-69, 8-71, 8-135, 8-171, 8-173, 8-245, 8-281, 8-283, 9-19, 9-49, 9-51, 9-71, 9-73, 9-149, 9-151, 9-173
312605-0314 ..	HEXAGON NUT, M6M M5 A280	1-11, 1-13, 1-53, 1-55, 1-57, 1-147, 1-155, 1-157, 1-161, 1-163, 1-227, 1-235, 1-333, 1-335, 1-345, 1-347, 1-351, 1-399, 1-401, 1-419, 2-161, 2-163, 2-165, 2-185, 2-187, 2-243, 2-245, 2-247, 2-273, 3-27, 4-93, 4-95, 4-97, 4-99, 5-83, 5-85, 5-87, 5-89, 5-259, 5-261, 5-263, 5-265, 5-267, 5-269, 5-297, 5-299, 5-331, 6-61, 6-63, 6-81, 7-23, 7-77, 8-13, 8-17, 8-19, 8-21, 8-145, 8-179, 8-181, 8-189, 8-191, 8-279, 8-281, 8-283, 8-287, 8-289, 8-301, 8-305, 9-149, 9-151, 11-57, 11-59
312605-0316 ..	HEXAGON NUT, M6M M6 A280	1-11, 1-13, 1-15, 1-17, 1-53, 1-55, 1-57, 1-135, 1-137, 1-143, 1-145, 1-155, 1-157, 1-161, 1-163, 1-165, 1-167, 1-169, 1-171, 1-173, 1-175, 1-177, 1-181, 1-183, 1-185, 1-187, 1-189, 1-191, 1-193, 1-195, 1-199, 1-207, 1-223, 1-233, 1-237, 1-239, 1-255, 1-289, 1-319, 1-321, 1-323, 1-367, 1-375, 1-383, 1-387, 1-389, 1-419, 1-423, 2-11, 2-25, 2-27, 2-31, 2-37, 2-47, 2-75, 2-133, 2-135, 2-137, 2-139, 2-145, 2-147, 2-161, 2-163, 2-165, 2-181, 2-213, 2-229, 2-293, 2-309, 2-319, 2-323, 2-339, 2-347, 2-349, 2-351, 4-27, 4-29, 4-39, 4-41, 4-143, 4-145, 4-199, 4-201, 4-223, 4-225, 4-231, 4-233, 4-235, 4-237, 4-291, 4-293, 4-305, 5-21, 5-23, 5-35, 5-37, 5-39, 5-67, 5-69, 5-71, 5-73, 5-75, 5-95, 5-97, 5-145, 5-147, 5-149, 5-153, 5-155, 5-161, 5-163, 5-231, 5-233, 5-235, 5-237, 5-239, 5-241, 5-259, 5-261, 5-263, 5-265, 5-267, 5-269, 5-323, 5-325, 5-331, 6-25, 6-27, 6-81, 7-11, 7-29, 7-77, 8-17, 8-25, 8-31, 8-87, 8-89, 8-121, 8-123, 8-135, 8-139, 8-145, 8-167, 8-169, 8-171, 8-173, 8-179, 8-181, 8-185, 8-189, 8-191, 8-197, 8-199, 8-201, 8-235, 8-237, 8-239, 8-241, 8-243, 8-251, 8-253, 8-255, 8-265, 8-303, 8-307, 9-19, 9-43, 9-45, 9-49, 9-51, 9-55, 9-57, 9-63, 9-65, 9-67, 9-69, 9-77, 9-79, 9-81, 9-83, 9-85, 9-149, 9-151, 11-11, 11-15, 11-57, 11-59
312605-0318 ..	HEXAGON NUT, M6M M8 A280	1-53, 1-55, 1-57, 1-125, 1-127, 1-143, 1-145, 1-155, 1-157, 1-209, 1-211, 1-213, 1-219, 1-221, 1-225, 1-227, 1-229, 1-231, 1-235, 1-245, 1-247, 1-249, 1-251, 1-255, 1-285, 1-315, 1-319, 1-339, 1-341, 2-23, 2-29, 2-37, 2-69, 2-71, 2-75, 2-89, 2-95, 2-145, 2-147, 2-235, 2-349, 2-351, 4-27, 4-29, 4-39, 4-41, 4-153, 4-209, 4-243, 4-245, 4-263, 4-265, 4-267, 4-269, 4-271, 4-275, 4-277, 4-279, 4-281, 4-283, 4-291, 4-293, 5-13, 5-15, 5-17, 5-19, 5-21, 5-23, 5-41, 5-43, 5-51, 5-53, 5-55, 5-105, 5-107, 5-115, 5-117, 5-119, 5-231, 5-233, 5-235, 5-237, 5-239, 5-241, 5-279, 5-281, 5-283, 5-285, 5-307, 5-313, 5-315, 5-321, 6-11, 6-25, 6-27, 6-51, 6-53, 6-59, 6-71, 7-41, 7-43, 7-45, 7-49, 8-111, 8-113, 8-135, 8-179, 8-181, 8-183, 8-189, 8-191, 8-193, 8-199, 8-201, 11-71, 11-73
312605-0320 ..	HEXAGON NUT, M6M M10 A280	1-229, 1-245, 1-247, 1-249, 1-251, 1-305, 1-345, 1-347, 2-81, 5-5, 5-7, 5-169, 5-171, 5-277, 6-75, 8-171, 8-173
312605-0322 ..	HEXAGON NUT, M6M M12 A280	1-175, 1-177, 1-193, 1-195, 2-17, 2-19, 5-169, 5-171, 6-11, 6-75, 8-61, 8-85, 10-3
312605-0324 ..	HEXAGON NUT, M6M M16 A280	1-219, 2-231, 2-233, 2-235, 8-61, 11-79
312605-0326 ..	HEXAGON NUT, M6M M20 A280	6-33, 6-59
312605-0328 ..	HEXAGON NUT, M6M M24 A280	10-49
312607-0312 ..	HEXAGON NUT, EN 24032 M6M M4 A480	8-105, 11-19, 11-21
312607-0314 ..	HEXAGON NUT, EN 24032 M6M M5 A480	2-47, 8-105
312607-0316 ..	HEXAGON NUT, EN 24032 M6M M6 A480	8-241
312607-0318 ..	HEXAGON NUT, EN 24032 M6M M8 A480	4-83, 4-85, 4-89, 4-91
312607-0320 ..	HEXAGON NUT, EN 24032 M6M M10 A480	3-23
312625-0310 ..	HEXAGON THIN NUT, EN 24035 ML6M M3 A4	2-161, 2-163, 2-165
312625-0316 ..	HEXAGON THIN NUT, EN 24035 ML6M M6 A4	1-175, 1-177, 1-193, 1-195, 1-343, 8-147, 8-157, 8-159
312625-0318 ..	HEXAGON THIN NUT, EN 24035 ML6M M8 A4	1-339, 4-51, 4-53, 4-55, 4-57, 4-59, 4-65, 4-67, 4-69, 4-71, 4-73, 4-143, 4-145, 4-199, 4-201, 4-259, 4-267, 4-269, 4-271, 4-279, 4-281, 4-283, 4-309, 8-15, 8-145
312625-0320 ..	HEXAGON THIN NUT, EN 24035 ML6M M10 A4	11-19, 11-21
312625-0322 ..	HEXAGON THIN NUT, EN 24035 ML6M M12 A4	2-349, 2-351
312625-0326 ..	HEXAGON THIN NUT, EN 24035 ML6M M20 A4	2-221, 2-223
312635-0320 ..	NUT M6M 10X1 STAINLESS A2 80	4-267, 4-269, 4-271, 4-279, 4-281, 4-283
312705-0310 ..	NUT HEX. DOMED CAP MHM-6 M3 A2	1-193, 1-195
312705-0312 ..	NUT HEX. DOMED CAP MHM-6 M4 A280	1-193, 1-195, 2-267, 2-269, 2-273, 2-287, 2-307, 2-313, 2-317, 2-325, 2-329, 2-331, 2-333, 7-57, 7-61, 8-293, 8-295, 8-303
312705-0314 ..	NUT HEX. DOMED CAP MHM-6 M5 A280	1-399, 1-401, 4-7, 4-9, 4-11, 4-17, 4-19, 4-21, 4-51, 4-53, 4-55, 4-57, 4-59, 4-65, 4-67, 4-69, 4-71, 4-73, 5-331, 6-81
312705-0316 ..	NUT HEX. DOMED CAP MHM-6 M6 A280	1-71, 1-73, 1-399, 1-401, 2-143, 2-293, 4-243, 4-245, 5-259, 5-261, 5-263, 5-265, 5-267, 5-269, 5-331, 6-81, 8-75, 8-155
312705-0318 ..	NUT HEX. DOMED CAP MHM-6 M8 A280	1-71, 1-73, 1-165, 1-167, 1-169
312715-0116 ..	WING NUT DIN 315 A2 MVM-K M6	1-285, 1-321, 1-323
312805-0103 ..	NUT ROUND WITH SLOTS M17X1 FE	2-31

Part No	Description	Page No
312805-0105 ..	NUT ROUND WITH SLOTS M25X1,5 FE	6-33
312805-0107 ..	NUT ROUND WITH SLOTS M35X1,5 FE	5-213, 5-215, 5-217, 5-219, 5-221, 5-223
312805-0110 ..	NUT ROUND WITH SLOTS M50X1,5 FE	5-213, 5-215, 5-217, 5-219, 5-221, 5-223
312810-0312 ..	HEXAGON NUT, NY-LOCK M4 FZB	2-293
312810-0316 ..	HEXAGON NUT, NY-LOCK M6 FZB	9-49, 9-51
312811-0318 ..	NUT HEX.LOCK HELI COIL M8 SS	4-267, 4-269, 4-271, 4-279, 4-281, 4-283
312812-0312 ..	HEXAGON NUT, NY-LOCK M4 A480	2-265, 2-267, 2-281, 2-283, 2-287, 2-303, 2-309, 2-313 ... 2-319, 2-323, 2-333, 4-309, 5-67, 5-69, 5-71, 5-73, 5-75, 5-145, 5-147, 5-149, 9-49, 9-51, 11-85
312812-0314 ..	HEXAGON NUT, NY-LOCK M5 A480	1-285, 1-345, 1-347, 2-265, 2-267, 2-287, 2-303, 2-313 ... 2-333, 4-93, 4-95, 4-97, 4-99
312812-0316 ..	HEXAGON NUT, NY-LOCK M6 A480	1-161, 1-163, 1-199, 1-317, 1-321, 1-323, 2-95, 2-97, 2-125 2-221, 2-223, 4-51, 4-53, 4-55, 4-57, 4-59, 4-65, 4-67, 4-69, 4-71, 4-73, 5-17, 5-19, 5-253, 5-255 5-277, 5-309, 5-311, 5-317, 5-327, 6-11, 6-33, 6-59, 8-119, 8-135, 8-139, 8-171, 8-173, 8-265 ... 10-47, 11-15, 11-71, 11-75, 11-85
312812-0318 ..	HEXAGON NUT, NY-LOCK M8 A480	4-51, 4-53, 4-55, 4-57, 4-59, 4-65, 4-67, 4-69, 4-71, 4-73 4-263, 4-265, 4-267, 4-269, 4-271, 4-275, 4-277, 4-279, 4-281, 4-283, 4-295, 4-297, 5-13, 5-15 ... 5-253, 5-255, 6-65, 11-15, 11-85
312812-0320 ..	HEXAGON NUT, NY-LOCK M10 A480	4-291, 4-293, 8-107, 8-109
312812-0322 ..	HEXAGON NUT, NY-LOCK M12 A480	2-213, 2-221, 2-223, 2-229, 3-25
312812-0324 ..	HEXAGON NUT, NY-LOCK M16 A480	10-43
312902-0316 ..	NUT HEX. LEFT THREAD, M6 A280	4-305
312902-0318 ..	NUT HEX. LEFT THREAD, M8 A280	5-13, 5-15, 5-21, 5-23, 5-231, 5-233, 5-235, 5-237, 5-239, 5-241
312902-0320 ..	NUT HEX. LEFT THREAD, M10 A280	5-5, 5-7
312927-0150 ..	RIVET NUT M8, CLAMP. LENGTH 3,0 - 4,5	8-111, 8-113
315101-0136 ..	WASHER BRB, 4,3/8 H=0,8	9-77, 9-79, 9-81, 9-83, 9-85, 9-93, 9-97, 9-99, 9-121, 9-123, 9-125 ... 9-135, 9-137
315101-0146 ..	WASHER PLAIN, BRB, 5,3/10 H=1	9-49, 9-51, 9-53, 9-77, 9-79, 9-81, 9-83, 9-85, 9-97, 9-99 ... 9-109, 9-117, 9-119, 9-123, 9-125, 9-127, 9-129, 9-131, 9-135, 9-137, 9-139, 9-141, 9-143
315101-0153 ..	WASHER PLAIN, BRB, 6,4/12 H=1,5	1-237, 1-239, 2-35, 2-231, 2-233, 5-25, 5-27, 9-49, 9-51 ... 9-77, 9-79, 9-81, 9-83, 9-85, 9-97, 9-99, 9-121, 9-135, 9-137
315101-0165 ..	WASHER PLAIN, BRB, 8,4/16 H=1,5	1-339, 2-231, 2-233
315101-0176 ..	WASHER PLAIN, BRB, 12/22 H=2	11-45
315103-0124 ..	WASHER, BRB, 3,2/6,H=0,5 NI PL BR	8-135
315103-0136 ..	WASHER PLAIN, BRB, 4,3/8,H=0,8 NI PL BR	9-19, 11-57, 11-59
315103-0153 ..	WASHER, BRB, 6,4/12,H=1,5 NIPL BR	5-29, 5-31, 8-241
315103-0156 ..	WASHER PLAIN, BRB 6,7/14,H=1,5 NI PL BR	8-143
315105-0124 ..	WASHER BRB 3,2X6 RFR	1-175, 1-177, 1-193, 1-195, 1-265, 1-345, 1-347, 2-117, 2-119, 2-185 2-187, 5-5, 5-7, 5-231, 5-233, 5-235, 5-237, 5-239, 5-241, 5-307, 5-313, 5-315, 7-11, 8-31, 8-135 ... 9-19, 9-49, 9-51, 9-71, 9-73, 9-89, 9-91, 9-123, 9-125, 9-149, 9-151
315105-0136 ..	WASHER BRB 4,3X8 RFR	1-13, 1-53, 1-55, 1-57, 1-143, 1-145, 1-161, 1-163, 1-193, 1-195 1-225, 1-237, 1-239, 1-255, 1-257, 1-263, 1-265, 1-287, 1-321, 1-323, 1-351, 1-421, 2-17, 2-19 2-89, 2-91, 2-229, 2-243, 2-245, 2-247, 2-251, 2-253, 2-265, 2-267, 2-269, 2-273, 2-279, 2-281
315105-0146 ..	WASHER BRB 5,3X10 RFR	1-7, 1-9, 1-11, 1-13, 1-15, 1-17, 1-135, 1-137, 1-139, 1-151, 1-153 1-155, 1-157, 1-161, 1-163, 1-193, 1-195, 1-201, 1-215, 1-217, 1-229, 1-235, 1-263, 1-285, 1-289 1-333, 1-335, 1-345, 1-347, 1-351, 1-387, 1-389, 1-419, 1-421, 2-37, 2-47, 2-75, 2-81, 2-95, 2-133 2-135, 2-137, 2-161, 2-163, 2-165, 2-235, 2-243, 2-245, 2-247, 2-265, 2-267, 2-273, 2-287, 2-297 2-303, 2-313, 2-333, 3-27, 4-7, 4-9, 4-11, 4-17, 4-19, 4-21, 4-27, 4-29, 4-39, 4-41, 4-51, 4-53, 4-55 4-57, 4-59, 4-63, 4-65, 4-67, 4-69, 4-71, 4-73, 4-77, 4-81, 4-93, 4-95, 4-97, 4-99, 4-101, 4-105 4-107, 4-111, 4-129, 4-131, 4-133, 4-155, 4-157, 4-159, 4-161, 4-187, 4-189, 4-191, 4-263, 4-265 4-275, 4-277, 4-299, 4-309, 5-131, 5-133, 5-135, 5-211, 5-259, 5-261, 5-263, 5-265, 5-267, 5-269 5-297, 5-299, 5-307, 5-313, 5-315, 5-323, 5-325, 5-331, 6-43, 6-45, 6-51, 6-53, 6-61, 6-63, 6-81 7-7, 7-9, 7-49, 7-57, 7-61, 7-65, 7-67, 7-77, 8-13, 8-17, 8-25, 8-31, 8-61, 8-63, 8-91, 8-93, 8-97 8-105, 8-111, 8-113, 8-129, 8-143, 8-167, 8-179, 8-181, 8-189, 8-191, 8-219, 8-221, 8-223, 8-225 8-227, 8-229, 8-241, 8-269, 8-279, 8-281, 8-283, 8-301, 9-21, 9-27, 9-35, 9-89, 9-91, 9-107, 9-115 ... 9-149, 9-151, 10-39, 11-11, 11-15, 11-57, 11-59
315105-0153 ..	WASHER BRB 6,4X12 RFR	1-11, 1-15, 1-17, 1-53, 1-55, 1-57, 1-71, 1-73, 1-141, 1-143, 1-145 1-149, 1-155, 1-157, 1-165, 1-167, 1-169, 1-171, 1-173, 1-193, 1-195, 1-215, 1-217, 1-255, 1-257 1-259, 1-283, 1-287, 1-289, 1-291, 1-293, 1-311, 1-321, 1-323, 1-327, 1-333, 1-335, 1-341, 1-349 1-351, 1-355, 1-357, 1-367, 1-381, 1-383, 1-419, 1-421, 2-9, 2-25, 2-31, 2-37, 2-59, 2-63, 2-65 2-67, 2-69, 2-71, 2-85, 2-89, 2-93, 2-95, 2-97, 2-99, 2-101, 2-133, 2-135, 2-137, 2-139, 2-143 2-145, 2-147, 2-185, 2-187, 2-221, 2-223, 2-251, 2-253, 2-267, 2-269, 2-287, 2-291, 2-293, 2-307 2-313, 2-315, 2-317, 2-323, 2-325, 2-329, 2-331, 2-333, 2-343, 2-345, 2-349, 2-351, 3-15, 3-33 4-7, 4-9, 4-11, 4-17, 4-19, 4-21, 4-27, 4-29, 4-39, 4-41, 4-51, 4-53, 4-55, 4-57, 4-59, 4-65, 4-67 4-69, 4-71, 4-73, 4-83, 4-85, 4-89, 4-91, 4-93, 4-95, 4-97, 4-99, 4-115, 4-117, 4-119, 4-121, 4-129 4-131, 4-133, 4-155, 4-157, 4-159, 4-161, 4-175, 4-177, 4-179, 4-181, 4-187, 4-189, 4-191, 4-223 4-225, 4-227, 4-229, 4-231, 4-233, 4-235, 4-237, 4-247, 4-261, 4-267, 4-269, 4-271, 4-273, 4-279 4-281, 4-283, 4-295, 4-297, 4-305, 4-307, 4-309, 5-5, 5-7, 5-17, 5-19, 5-29, 5-31, 5-35, 5-37, 5-39 5-41, 5-43, 5-51, 5-53, 5-55, 5-67, 5-69, 5-71, 5-73, 5-75, 5-77, 5-79, 5-95, 5-97, 5-105, 5-107 5-115, 5-117, 5-119, 5-131, 5-133, 5-135, 5-137, 5-139, 5-141, 5-143, 5-145, 5-147, 5-149, 5-153 5-155, 5-161, 5-163, 5-169, 5-171, 5-173, 5-175, 5-177, 5-181, 5-183, 5-211, 5-231, 5-233, 5-235 5-237, 5-239, 5-241, 5-253, 5-255, 5-259, 5-261, 5-263, 5-265, 5-267, 5-269, 5-275, 5-277, 5-279 5-281, 5-301, 5-303, 5-307, 5-309, 5-311, 5-313, 5-315, 5-317, 5-323, 5-325, 5-327, 5-331, 6-11 6-17, 6-25, 6-27, 6-33, 6-43, 6-45, 6-51, 6-53, 6-59, 6-81, 7-7, 7-9, 7-11, 7-19, 7-29, 7-49, 7-51 7-55, 7-69, 7-77, 8-11, 8-15, 8-17, 8-19, 8-21, 8-25, 8-27, 8-29, 8-31, 8-33, 8-45, 8-59, 8-61, 8-63 8-73, 8-91, 8-93, 8-95, 8-97, 8-99, 8-101, 8-103, 8-107, 8-109, 8-111, 8-113, 8-119, 8-121, 8-123 8-129, 8-133, 8-135, 8-139, 8-143, 8-145, 8-157, 8-159, 8-163, 8-167, 8-169, 8-171, 8-173, 8-177 8-179, 8-181, 8-189, 8-191, 8-199, 8-201, 8-231, 8-233, 8-235, 8-237, 8-239, 8-241, 8-245, 8-247

Part No	Description	Page No
		8-251, 8-253, 8-255, 8-265, 8-269, 8-303, 8-307, 9-19, 9-49, 9-51, 9-55, 9-57, 9-63, 9-65, 9-67 9-69, 9-77, 9-79, 9-81, 9-83, 9-85, 9-97, 9-99, 9-149, 9-151, 9-173, 11-11, 11-15, 11-19, 11-21 ..... 11-35, 11-57, 11-59, 11-71, 11-75, 11-85
315105-0156 ..	WASHER BRB 6,7X14 RFR	1-155, 1-157, 1-343, 2-297, 2-309, 2-319, 5-231, 5-233, 5-235 5-237, 5-239, 5-241, 5-323, 5-325, 6-59, 8-17, 8-25, 8-75, 8-147, 8-155, 8-167, 8-169, 8-171, 8-173 ..... 9-21, 9-27, 9-35, 9-43, 9-45
315105-0165 ..	WASHER BRB 8,4X16 RFR	1-13, 1-47, 1-49, 1-53, 1-55, 1-57, 1-87, 1-89, 1-91, 1-93, 1-105 1-107, 1-109, 1-125, 1-127, 1-143, 1-145, 1-155, 1-157, 1-165, 1-167, 1-169, 1-255, 1-257, 1-283 1-285, 1-303, 1-315, 1-341, 1-419, 2-9, 2-11, 2-17, 2-19, 2-25, 2-37, 2-59, 2-63, 2-69, 2-71, 2-75 2-83, 2-89, 2-109, 2-111, 2-113, 2-115, 2-133, 2-135, 2-137, 2-215, 2-217, 2-229, 2-235, 2-273 2-343, 2-345, 4-115, 4-117, 4-119, 4-121, 4-143, 4-145, 4-153, 4-175, 4-177, 4-179, 4-181, 4-199 4-201, 4-209, 4-223, 4-225, 4-231, 4-233, 4-235, 4-237, 4-243, 4-245, 4-249, 4-251, 4-253, 4-259 4-261, 4-263, 4-265, 4-267, 4-269, 4-271, 4-273, 4-275, 4-277, 4-279, 4-281, 4-283, 4-291, 4-293 4-303, 5-5, 5-7, 5-13, 5-15, 5-17, 5-19, 5-25, 5-27, 5-29, 5-31, 5-35, 5-37, 5-39, 5-41, 5-43, 5-51 5-53, 5-55, 5-77, 5-79, 5-83, 5-85, 5-87, 5-89, 5-95, 5-97, 5-105, 5-107, 5-115, 5-117, 5-119, 5-169 5-171, 5-173, 5-175, 5-177, 5-179, 5-181, 5-183, 5-231, 5-233, 5-235, 5-237, 5-239, 5-241, 5-253 5-255, 5-259, 5-261, 5-263, 5-265, 5-267, 5-269, 5-273, 5-277, 5-279, 5-281, 5-283, 5-289, 5-291 5-293, 5-301, 5-303, 5-307, 5-313, 5-315, 5-323, 5-325, 6-5, 6-7, 6-13, 6-25, 6-27, 6-33, 6-43, 6-45 6-51, 6-53, 6-59, 6-65, 6-69, 7-9, 7-27, 7-49, 8-13, 8-15, 8-25, 8-33, 8-61, 8-97, 8-111, 8-113 8-125, 8-135, 8-137, 8-153, 8-157, 8-159, 8-161, 8-163, 8-165, 8-167, 8-183, 8-193, 8-199, 8-201 ..... 9-69, 9-87, 11-63, 11-85
315105-0171 ..	WASHER BRB 10X18 RFR	..... 5-115, 5-117, 5-119, 5-279, 5-281
315105-0173 ..	WASHER BRB 10,5X22 RFR	1-199, 1-207, 1-245, 1-247, 1-249, 1-251, 1-305, 1-345, 1-347 2-181, 2-213, 2-215, 2-217, 2-221, 2-223, 2-229, 2-231, 2-233, 2-235, 2-349, 2-351, 3-13, 3-15 3-31, 3-33, 4-93, 4-95, 4-97, 4-99, 4-103, 4-109, 4-113, 4-155, 4-157, 4-159, 4-161, 5-5, 5-7, 5-17 5-19, 5-35, 5-37, 5-39, 5-95, 5-97, 5-211, 5-253, 5-255, 5-283, 5-307, 5-313, 5-315, 5-319, 6-17 6-71, 7-41, 7-43, 7-49, 8-15, 8-45, 8-51, 8-53, 8-97, 8-99, 8-101, 8-107, 8-109, 8-245, 10-3, 11-7 ..... 11-9, 11-33, 11-79
315105-0178 ..	WASHER BRB 13X24 RFR	2-17, 2-19, 2-37, 2-47, 2-63, 2-231, 2-233, 3-7, 3-9, 3-25, 4-259 ..... 5-169, 5-171, 8-41, 8-43, 8-45, 8-63, 8-85, 8-111, 8-113, 9-49, 9-51, 10-3, 11-79
315105-0186 ..	WASHER BRB 17X30 RFR	1-219, 2-9, 2-133, 2-135, 2-137, 2-213, 2-215, 2-217, 2-221, 2-223 ..... 2-231, 2-233, 3-23, 4-263, 4-265, 4-275, 4-277, 5-211, 8-61, 11-79
315105-0192 ..	WASHER BRB 21X36 RFR	..... 5-211, 6-33, 6-59, 11-73
315106-0124 ..	WASHER ISO 7089-3-200 HV A4	..... 2-161, 2-163, 2-165
315106-0136 ..	WASHER ISO 7089-4-200 HV A4	..... 1-375, 6-51, 6-53
315106-0146 ..	WASHER ISO 7089-5-200 HV A4	..... 6-33, 6-55, 6-57, 6-59
315106-0153 ..	WASHER ISO 7089-6-200 HV A4	..... 2-75, 5-253, 5-255, 8-243
315106-0173 ..	WASHER ISO 7089-10-200 HV A4	..... 3-23, 6-11, 6-25, 6-27, 6-59
315111-0173 ..	WASHER PLAIN, TBRB 10,5/22 H=4	..... 5-277, 8-87, 8-89
315111-0186 ..	WASHER PLAIN, TBRB 17/30 H=6	..... 2-221, 2-223, 2-229, 2-231, 2-233
315115-0153 ..	WASHER PLAIN, TBRB 6,4/12 H=3	2-349, 2-351, 5-65, 5-77, 5-79, 7-17, 7-23, 8-65, 8-67, 8-69 ..... 8-71, 8-111, 8-113, 8-147, 8-179, 8-181, 8-189, 8-191, 8-243, 8-265
315115-0165 ..	WASHER PLAIN, TBRB 8,4/16 H=3	1-15, 1-17, 1-39, 1-41, 1-53, 1-55, 1-57, 1-61, 1-63, 1-65 ..... 1-67, 1-69, 1-87, 1-89, 1-91, 1-93, 1-117, 1-119, 2-349, 2-351, 4-259, 8-63, 11-15, 11-53
315115-0173 ..	WASHER PLAIN, TBRB 10,5/22 H=4	..... 1-331, 4-291, 4-293, 7-49, 8-251, 8-253, 11-73
315115-0178 ..	WASHER PLAIN, TBRB 13/24 H=4	..... 1-15, 1-17, 6-11
315121-0178 ..	WASHER PLAIN, TBRSB 13/36 H=6	 8-73
315125-0146 ..	WASHER TBRSB 5.3X15X1 A4	..... 3-23, 9-89, 9-91
315125-0153 ..	WASHER TBRSB 6,4X22X4 A4	1-19, 1-319, 1-399, 1-401, 2-37, 2-109, 2-111, 2-113, 2-115 2-213, 2-221, 2-223, 2-229, 2-231, 2-233, 2-343, 2-345, 2-347, 4-243, 4-245, 4-291, 4-293, 4-303 5-17, 5-19, 5-259, 5-261, 5-263, 5-265, 5-267, 5-269, 5-307, 5-313, 5-315, 6-11, 7-51, 7-55, 7-71 7-73, 8-131, 8-133, 8-135, 8-153, 8-163, 8-179, 8-181, 8-189, 8-191, 8-231, 8-233, 9-105, 9-111 ..... 9-113, 9-123, 9-125, 9-135, 9-137
315125-0165 ..	WASHER TBRSB 8,4X26X5 A4	1-155, 1-157, 1-227, 1-333, 1-335, 2-17, 2-19, 2-75, 2-315, 3-5 ..... 3-29, 4-249, 4-251, 4-253, 5-173, 5-175, 5-177, 5-283, 6-33, 6-71, 7-29, 8-161, 8-199, 8-201
315125-0173 ..	WASHER TBRSB 10,5X28X6 A4	1-15, 1-17, 1-61, 1-63, 1-65, 1-67, 1-69, 1-117, 1-119, 2-213 ..... 2-221, 2-223, 5-307, 5-313, 5-315, 6-11, 11-79
315202-0101 ..	O-RING 3,1X1,6 MM	..... 4-123, 4-125, 4-183, 4-185, 10-9
315202-0104 ..	O-RING 6,1X1,6 MM	..... 4-155, 4-157, 4-159, 4-161
315202-0105 ..	O-RING 7,1X1,6 MM	..... 4-123, 4-125, 4-127, 4-183, 4-185
315202-0107 ..	O-RING 9,1X1,6 MM	..... 5-13, 5-15, 5-25, 5-27
315202-0110 ..	O-RING 12,1X1,6 MM	 4-173
315202-0113 ..	O-RING 15,1X1,6 MM	 5-283
315202-0115 ..	O-RING 17,1X1,6 MM	 3-17
315202-0116 ..	O-RING 18,1X1,6 MM	..... 4-143, 4-145, 4-199, 4-201
315202-0118 ..	O-RING 22,1X1,6 MM	 4-173
315202-0119 ..	O-RING 25,1X1,6 MM	..... 1-209, 1-211, 2-271, 4-173, 8-291
315202-0124 ..	O-RING 37,1X1,6 MM	..... 3-7, 3-9
315202-0208 ..	O-RING 9,3X2,4 MM	..... 4-143, 4-145, 4-199, 4-201
315202-0211 ..	O-RING 13,3X2,4 MM	..... 2-117, 2-119
315202-0214 ..	O-RING 17,3X2,4 MM	 10-37
315202-0217 ..	O-RING 24,2X3 MM	..... 5-5, 5-7, 5-231, 5-233, 5-235, 5-237, 5-239, 5-241, 5-287, 10-37
315202-0218 ..	O-RING 26,2X3 MM	..... 6-13, 6-33
315202-0221 ..	O-RING 34,2X3 MM	..... 5-307, 5-313, 5-315
315202-0223 ..	O-RING 39,2X3 MM	..... 6-25, 6-27, 6-51, 6-53
315202-0225 ..	O-RING 44,2X3 MM	5-29, 5-31, 5-77, 5-79, 5-213, 5-215, 5-217, 5-219, 5-221, 5-223, 6-43, 6-45
315202-0233 ..	O-RING 79,2X5,7 MM	 10-37
315202-0242 ..	O-RING 124,3X5,7 MM	..... 6-25, 6-27, 6-51, 6-53
315202-0267 ..	O-RING 16,3X2,4 MM	..... 5-307, 5-313, 5-315, 6-43, 6-45
315202-0302 ..	O-RING 54,5X3 MM	..... 2-125, 5-213, 5-215, 5-217, 5-219, 5-221, 5-223, 10-37
315202-0303 ..	O-RING 59,5X3 MM	5-231, 5-233, 5-235, 5-237, 5-239, 5-241, 5-283, 6-25, 6-27, 6-51, 6-53 10-37
315202-0304 ..	O-RING 64,5X3 MM	..... 1-271, 10-37
315202-0305 ..	O-RING 69,5X3 MM	..... 5-169, 5-171, 5-231, 5-233, 5-235, 5-237, 5-239, 5-241, 6-33, 10-37

Part No	Description	Page No
315202-0306 ..	O-RING 74,5X3 MM	6-25, 6-27, 6-51, 6-53
315202-0307 ..	O-RING 79,5X3 MM	2-181, 10-37
315202-0308 ..	O-RING 84,5X3 MM	1-269, 1-273, 10-37
315202-0310 ..	O-RING 94,5X3 MM	10-37
315202-0311 ..	O-RING 99,5X3 MM	5-29, 5-31, 5-77, 5-79, 5-283
315202-0315 ..	O-RING 119,5X3 MM	6-33
315202-0321 ..	O-RING 149,3X5,7 MM	6-17, 6-25, 6-27, 6-51, 6-53
315202-0329 ..	O-RING 189,3X5,7 MM	6-17, 6-25, 6-27, 6-51, 6-53
315202-0505 ..	O-RING 6,07X1,78 MM	3-11
315202-0612 ..	O-RING 75,79X3,53 MM	2-93, 2-95
315202-0701 ..	O-RING 10,82X1,78 MM	2-39
315202-0709 ..	O-RING 23,52X1,78 MM	2-63, 2-133, 2-135, 2-137
315202-0739 ..	O-RING 55,25X2,62 MM	1-147
315202-0803 ..	O-RING 44,17X1,78 MM	2-95
315204-0103 ..	O-RING 5,1X1,6 MM	2-25
315204-0105 ..	O-RING 7,1X1,6 MM	4-155, 4-157, 4-159, 4-161
315204-0110 ..	O-RING 12,1X1,6 MM	1-321, 1-323
315204-0123 ..	O-RING 35,1X1,6 MM	1-165, 1-167, 1-169, 1-181, 1-183
315204-0206 ..	O-RING 7,3X2,4 MM	1-223
315204-0207 ..	O-RING 8,3X2,4 MM	2-35
315204-0208 ..	O-RING 9,3X2,4 MM	1-285
315204-0209 ..	O-RING 10,3X2,4 MM	1-161, 1-163
315204-0213 ..	O-RING 15,2X2,4 MM	1-225
315204-0214 ..	O-RING 17,3X2,4 MM	1-285
315204-0215 ..	O-RING 19,2X3 MM	1-245, 1-247, 1-249, 1-251, 1-269, 1-271, 1-273, 5-173, 5-175, 5-177, 10-15, 10-17, 10-19, 10-21, 10-23, 10-25, 10-27, 10-29, 10-31
315204-0219 ..	O-RING 29,2X3 MM	1-245, 1-247, 1-249, 1-251, 10-15, 10-17, 10-19, 10-21, 10-23, 10-25
315204-0222 ..	O-RING 36,2X3 MM	2-31
315204-0223 ..	O-RING 39,2X3 MM	1-245, 1-247, 1-249, 1-251, 10-15, 10-17, 10-19, 10-21, 10-23, 10-25
315204-0301 ..	O-RING 49,5X3 MM	1-271, 10-27
315204-0303 ..	O-RING 59,5X3 MM	5-173, 5-175, 5-177
315204-0307 ..	O-RING 79,5X3 MM	1-233
315204-0308 ..	O-RING 84,5X3 MM	10-29
315204-0317 ..	O-RING 129,5X3 MM	1-225, 1-235
315204-0318 ..	O-RING 134,5X3 MM	6-17
315204-0324 ..	O-RING 164,3X5,7 MM	1-61, 1-63, 1-65, 1-67, 1-69, 1-117, 1-119
315205-0703 ..	O-RING 14,0X1,78 MM	1-19
315205-0704 ..	O-RING 15,6X1,78 MM	1-155, 1-157, 1-213
315205-0705 ..	O-RING 17,17X1,78 MM	1-155, 1-157
315205-0707 ..	O-RING 20,35X1,78 MM	1-15, 1-17
315205-0709 ..	O-RING 23,52X1,78 MM	1-191
315205-0714 ..	O-RING 31,47X1,78 MM	1-165, 1-167, 1-169
315205-0715 ..	O-RING 33,05X1,78 MM	1-155, 1-157, 1-199
315205-0716 ..	O-RING 34,65X1,78 MM	1-135, 1-137, 1-175, 1-177
315205-0801 ..	O-RING 37,82X1,78 MM	1-161, 1-163
315205-0802 ..	O-RING 41,0X1,78 MM	1-155, 1-157, 1-185, 1-187, 1-189, 1-321, 1-323
315205-0803 ..	O-RING 44,17X1,78 MM	1-135, 1-137
315205-0804 ..	O-RING 47,35X1,78 MM	1-155, 1-157, 1-161, 1-163, 1-193, 1-195
315205-0805 ..	O-RING 53,7X1,78 MM	1-135, 1-137
315205-0807 ..	O-RING 94,97X1,78 MM	1-135, 1-137, 1-223
315205-0808 ..	O-RING 7,59X2,62 MM	1-215, 1-217
315206-0506 ..	O-RING 7,65X1,78 MM	2-37
315206-0707 ..	O-RING 20,35X1,78 MM	2-105, 2-185, 2-187, 2-189, 2-191
315206-0739 ..	O-RING 55,25X2,62 MM	1-181, 1-183
315211-0103 ..	BONDED SEAL SS/NBR90 M6	1-11, 4-143, 4-145, 4-155, 4-157, 4-159, 4-161, 4-199, 4-201, 5-283, 10-9
315211-0104 ..	BONDED SEAL SS/NBR90 M8	4-115, 4-117, 4-119, 4-121, 4-175, 4-177, 4-179, 4-181, 10-9
315211-0111 ..	BONDED SEAL SS/NBR90 G1/2	1-235, 2-83
315220-0143 ..	V-RINGS 18X26X10,5 MM V-20S	4-309
315220-0183 ..	V-RINGS 36X46X13 MM V-40S	2-125
315220-0198 ..	V-RINGS 45X55X13 MM V-50S	2-37, 2-133, 2-135, 2-137
315220-0225 ..	V-RINGS 67X79X15,5 MM V-75S	2-133, 2-135, 2-137
315221-0169 ..	RADIAL SEAL 30X47X7 MM	6-25, 6-27, 6-51, 6-53
315221-0183 ..	RADIAL SEAL 40X52X7 MM	6-25, 6-27, 6-51, 6-53
315221-0185 ..	RADIAL SEAL 40X62X7 MM	6-13, 6-33
315221-0221 ..	RADIAL SEAL 70X90X10 MM	6-13, 6-33
315229-0101 ..	GASKETS, 10,4X17,4X3,7 MM 1/2" FDA	1-319
315229-0102 ..	GASKETS, 16,8X23,8X3,7 MM 3/4" FDA	1-143, 1-145, 7-19
315229-0103 ..	GASKETS, 23,1X30,1X3,7 MM 1" FDA	1-315, 1-319, 2-23, 2-69, 2-71, 2-145, 2-147, 7-41, 7-43, 7-47, 10-9
315229-0104 ..	GASKETS, 35,8X42,8X3,7 MM 1"1/2 FD	1-143, 1-145, 1-155, 1-157, 1-315, 2-23, 10-9
315229-0105 ..	GASKETS, 48,5X55,5X3,7 MM 2" FDA	1-143, 1-145, 1-319, 2-23, 2-27, 10-9
315229-0106 ..	GASKETS, 61,2X68,2X3,7 MM 2"1/2 FD	1-319
315229-0107 ..	GASKETS, 73,9X80,9X3,7 MM 2"1/2 FD	2-23, 10-9
315229-0203 ..	GASKET 22,1X30,1X3,7 MM 1"	1-209, 1-211, 1-213, 1-221, 1-225
315229-0204 ..	GASKET 34,8X42,8X3,7 MM 1"1/2	1-221, 1-235
315229-0205 ..	GASKET 47,5X55,5X3,7 MM 2 INCH	1-219, 1-221, 1-227, 1-231, 1-235
315229-0206 ..	GASKET 60,2X68,2X3,7 MM 2"1/2	1-221, 1-227, 1-229, 1-231
315229-0208 ..	GASKET 97,4X105,4X3,7 MM 4"	1-255
315230-0128 ..	BEARING SEAL G8X15X3 MM	2-95
315233-0101 ..	WASHER CAPTIVE SEALING M5(NEW315239-101)	1-269
315233-0109 ..	WASHER CAPTIVE SEALING G1/8	11-57, 11-59
315233-0110 ..	WASHER CAPTIVE SEALING G1/4	2-89, 7-19, 11-51, 11-57, 11-59, 11-71
315233-0111 ..	WASHER CAPTIVE SEALING G3/8	2-89, 11-57, 11-59

Part No	Description	Page No
315233-0113 ..	WASHER CAPTIVE SEALING G1/2	2-145, 2-147, 2-239, 2-241, 7-25, 7-81, 11-57, 11-59, 11-71
315234-0109 ..	WASHER,PL.RND.CU.10,3/13,5 H=1,0	5-173, 5-175, 5-177
315234-0110 ..	WASHER,PL.RND.CU.13,5/18 H=1,5	1-255, 2-79, 10-49
315234-0113 ..	WASHER PL.RND.CU.21,3//26 H=1,5	2-79
315237-0109 ..	WASHER,PL.RND.AL.10/14,H=1,5	1-355, 1-357
315237-0110 ..	WASHER,PL.RND.AL.13,5/18,H=1,5	1-15, 1-17, 1-321, 1-323, 2-9, 2-89, 2-133, 2-135, 2-137, 2-239, 2-241
315239-0101 ..	NYLON WASHER M5, M5RRP	1-271, 1-273
315239-0109 ..	NYLON WASHER G1/8, 1/8RRP	7-71, 7-73
315239-0110 ..	NYLON WASHER G1/4, 1/4RRP	7-79
315239-0111 ..	NYLON WASHER G3/8, 3/8RRP	2-65, 7-71, 7-73
315239-0113 ..	NYLON WASHER G1/2, 1/2RRP	2-249, 7-71, 7-73, 7-79
315400-0001 ..	TUBE PUN-H-6X1-BL	5-5, 5-7, 5-145, 5-147, 5-149
315400-0004 ..	TUBE PUN-H-8X1,25-BL	7-77
315400-0016 ..	TUBE PUN-H-4X0,75-BL	2-155, 2-157, 2-159, 5-181, 5-183
315402-0128 ..	LOCK WASHER FBB 3,6	9-19
315402-0136 ..	LOCK WASHER FBB 4,1	1-273, 9-19, 9-27, 9-35
315402-0146 ..	LOCK WASHER FBB 5,1	1-229, 9-21, 9-27, 9-35
315402-0156 ..	LOCK WASHER FBB 6,5	1-181, 1-183, 2-309, 2-319, 4-291, 4-293, 5-137, 5-139, 5-141, 5-143, 9-19, 9-21, 9-27, 9-35, 9-43, 9-45
315402-0165 ..	LOCK WASHER FBB 8,2	1-321, 1-323
315402-0173 ..	LOCK WASHER FBB 10,2	2-179
315402-0178 ..	LOCK WASHER FBB 12,2	6-19, 6-35
315410-0103 ..	LOCK WASHER MB 3 D=17 H=1	2-31
315410-0105 ..	LOCK WASHER MB 5 D=25 H=1,25	6-33
315701-0134 ..	PARALLEL KEY W. ROUND ENDS 3X3X10 MM	2-95
315701-0165 ..	PARALLEL KEY W. ROUND ENDS 4X4X10 MM	4-291, 4-293
315701-0166 ..	PARALLEL KEY W. ROUND ENDS 4X4X12 MM	8-247
315701-0170 ..	PARALLEL KEY W. ROUND ENDS 4X4X20 MM	8-141, 8-163
315701-0203 ..	PARALLEL KEY W. ROUND ENDS 5X5X25 MM	4-293
315701-0205 ..	PARALLEL KEY W. ROUND ENDS 5X5X30 MM	4-291
315701-0330 ..	PARALLEL KEY W. ROUND ENDS 12X8X32 MM	6-25, 6-27, 6-51, 6-53
315705-0135 ..	PARALLEL KEY W. ROUND ENDS 3X3X12 MM	6-43, 6-45
315705-0164 ..	PARALLEL KEY W. ROUND ENDS 4X4X8 MM	1-53, 1-55, 1-57, 2-349, 2-351
315705-0201 ..	PARALLEL KEY W. ROUND ENDS 5X5X20 MM	2-349, 2-351, 4-155, 4-157, 4-159, 4-161
315705-0202 ..	PARALLEL KEY W ROUND ENDS 5X5X25MM	5-307, 5-313, 5-315, 6-11, 8-247
315705-0232 ..	PARALLEL KEY W. ROUND ENDS 6X6X20 MM	6-13
315705-0234 ..	PARALLEL KEY W. ROUND ENDS 6X6X25 MM	6-33
315705-0238 ..	PARALLEL KEY W. ROUND ENDS 6X6X36 MM	2-349, 2-351
315705-0239 ..	PARALLEL KEY W. ROUND ENDS 6X6X40 MM	1-181, 1-183, 3-23, 5-283
315705-0263 ..	PARALLEL KEY W. ROUND ENDS 8X7X20 MM	5-283, 6-13
315705-0265 ..	PARALLEL KEY W. ROUND ENDS 8X7X25 MM	5-283
315705-0267 ..	PARALLEL KEY W. ROUND ENDS 8X7X30 MM	5-5, 5-7, 5-231, 5-233, 5-235, 5-237, 5-239, 5-241
315705-0270 ..	PARALLEL KEY W. ROUND ENDS 8X7X40 MM	5-5, 5-7
315705-0271 ..	PARALLEL KEY W. ROUND ENDS 8X7X45 MM	6-33
315705-0296 ..	PARALLEL KEY W. ROUND ENDS 10X8X25 MM	6-51, 6-53
315705-0298 ..	PARALLEL KEY W. ROUND ENDS 10X8X30 MM	6-25, 6-27
315705-0301 ..	PARALLEL KEY W. ROUND ENDS 10X8X40 MM	1-53, 1-55, 1-57
315705-0305 ..	PARALLEL KEY W. ROUND ENDS 10X8X60 MM	8-125
315705-0334 ..	PARALLEL KEY W. ROUND ENDS 12X8X50 MM	1-147
315741-0102 ..	RETAINING RING DIN 705 A2 6	8-241
315742-0116 ..	RETAINING RING 20 SMS 199 RFR	5-17, 5-19
315742-0122 ..	RETAINING RING 30 SMS 199	2-349, 2-351
315750-0112 ..	RETAINING RING SHAFT DIN 471 ST 15	8-245
315750-0119 ..	RETAINING RING SHAFT DIN 471 ST 25	10-45
315751-0103 ..	RETAINING RING FOR SHAFT DIN 471 6 SS	1-191, 1-223, 6-11, 8-135, 8-167, 8-169, 8-171, 8-173, 8-241, 8-265
315751-0109 ..	RETAINING RING FOR SHAFT DIN 471 12 SS	1-345, 1-347, 4-309, 8-31, 8-167, 8-169, 8-183, 8-193
315751-0111 ..	RETAINING RING FOR SHAFT DIN 471 14 SS	8-247
315751-0112 ..	RETAINING RING FOR SHAFT DIN 471 15 SS	4-291, 4-293, 8-27, 8-29, 8-57, 8-157, 8-159, 8-243, 8-251, 8-253
315751-0113 ..	RETAINING RING FOR SHAFT DIN 471 16 SS	1-15, 1-17, 2-179
315751-0119 ..	RETAINING RING FOR SHAFT DIN 471 25 SS	1-181, 1-183, 5-169, 5-171, 5-285, 5-307, 5-313, 5-315, 8-153, 8-157, 8-159, 8-243
315751-0124 ..	RETAINING RING FOR SHAFT DIN 471 35 SS	6-13
315753-0117 ..	RETAINING RING FOR BORE DIN 472 22 A2	6-25, 6-27
315753-0119 ..	RETAINING RING FOR BORE DIN 472 25 A2	8-153
315753-0121 ..	RETAINING RING FOR BORE DIN 472 28 A2	6-25, 6-27, 6-51, 6-53
315753-0122 ..	RETAINING RING FOR BORE DIN 472 30 A2	1-343, 5-231, 5-233, 5-235, 5-237, 5-239, 5-241, 8-75, 8-155
315753-0123 ..	RETAINING RING FOR BORE DIN 472 32 A2	8-247
315753-0124 ..	RETAINING RING FOR BORE DIN 472 35 A2	1-135, 1-137, 4-291, 4-293, 6-43, 6-45, 8-27, 8-29, 8-163
315753-0127 ..	RETAINING RING FOR BORE DIN 472 40 A2	6-11, 8-163
315753-0130 ..	RETAINING RING FOR BORE DIN 472 47 A2	1-181, 1-183, 8-161
315753-0132 ..	RETAINING RING FOR BORE DIN 472 52 A2	5-5, 5-7
315753-0135 ..	RETAINING RING FOR BORE DIN 472 60 A2	4-261, 4-273
315754-0113 ..	LOCKING WAE 15	1-269, 1-271, 1-273
315755-0105 ..	RETAINING RING SHAFT DIN 6799 3,2 A2	11-17
315755-0106 ..	RETAINING RING SHAFT DIN 6799 4 A2	5-309, 5-311, 5-317, 6-11
315755-0107 ..	RETAINING RING SHAFT DIN 6799 5 A2	1-199, 2-267, 2-287, 2-313, 2-333, 2-349, 2-351
315755-0108 ..	RETAINING RING SHAFT DIN 6799 6 A2	1-341, 8-75, 8-155
315755-0109 ..	RETAINING RING SHAFT DIN 6799 7 A2	8-153, 8-157, 8-159
315755-0110 ..	RETAINING RING SHAFT DIN 6799 9 A2	2-17, 2-19

Part No	Description	Page No
315755-0112 ..	RETAINING RING SHAFT DIN 6799 12 A2	8-107, 8-109, 8-129
315755-0113 ..	RETAINING RING SHAFT DIN 6799 15 A2	5-115, 5-117, 5-119
315755-0801 ..	RETAINING RING SHAFT DIN 6799 8 A2	2-11, 8-25
316810-0106 ..	PIPE CLIP FOR TUBE D=8 MM	5-95, 5-97, 5-169, 5-171, 5-307, 5-313
318219-0056 ..	CONNECTING LINK, SINGLE 3/8", SS	1-165, 1-167, 1-169
318301-0120 ..	LIFTING EYE BOLT, LT M10 FZB	11-19, 11-21
318302-0120 ..	EYE BOLT NUT, TYPE, LH, M10	11-67
318800-0104 ..	HANDLE,SPHERICAL KNOB,INT.THRE.,D.30-M8	1-15, 1-17, 8-25
318850-0113 ..	STELLAR KNOB, INT. THREAD, NO. 8306-0367	11-63
318856-0101 ..	KNOB, EXTERNAL THREAD. NO. 8308-1011	7-21
318856-0109 ..	KNOB, EXTERNAL THREAD. NO. 8308-1658	11-33
318856-0112 ..	KNOB, EXTERNAL THREAD. NO. 8306-0227	7-9
318856-0115 ..	KNOB, EXTERNAL THREAD. NO. 8306-0278	5-17, 5-19
318860-0103 ..	KNOB, ADJUST.HI.EXT.THREAD, NO 8324-3585	1-341
318860-0106 ..	KNOB, ADJUST.HI.EXT.THREAD, NO 8324-3674	2-179
319030-0125 ..	DISC SPRING, CONICAL 12,5X6,2X0,5 MM	8-165
321101-0125 ..	FLANGE BUSHING, 6X12X6 MM	2-95
321101-0143 ..	FLANGE BUSHING, 8X14X8 MM	2-95
321101-0162 ..	FLANGE BUSHING, 10X16X8 MM	4-295, 4-297, 8-99, 8-101
321101-0163 ..	FLANGE BUSHING, 10X16X10 MM	4-267, 4-269, 4-271, 4-279, 4-281, 4-283
321101-0172 ..	FLANGE BUSHING, 12X18X10 MM	6-25, 6-27
321101-0173 ..	FLANGE BUSHING, 12X18X12 MM	5-25, 5-27
321101-0202 ..	FLANGE BUSHING, 16X22X12 MM	8-107, 8-109
321101-0203 ..	FLANGE BUSHING, 16X22X16 MM	4-295, 4-297
321101-0222 ..	FLANGE BUSHING, 18X25X12	11-55
321105-0163 ..	BEARING BUSH W/O FLANGE, 10X16X10 MM	8-87, 8-89
321105-0164 ..	BEARING BUSH W/O FLANGE, 10X16X16 MM	8-25
321105-0173 ..	BEARING BUSH W/O FLANGE, 12X18X12 MM	8-87, 8-89
321111-0097 ..	FLANGE BUSHING, 8X12X12 MM	8-15
321111-0163 ..	FLANGE BUSHING, 12X18X20 MM	4-305
321111-0302 ..	FLANGE BUSHING, 20X26X15 MM	5-17, 5-19
321116-0234 ..	BEARING BUSH W/O FLANGE, 16X20X12 MM	5-301, 5-303, 6-5, 6-7
321120-0108 ..	BEARING BUSH W/O FLANGE, 12X14X8 MM	4-231, 4-233, 4-235, 4-237
321120-0137 ..	BEARING BUSH W/O FLANGE, 20X23X15 MM	10-47
321130-0200 ..	THRUST WASHER, 14X26X1,5 MM	5-231, 5-233, 5-235, 5-237, 5-239, 5-241
321133-0260 ..	BUSHING, 20X23X20 MM	4-307
321133-0375 ..	BUSHING, 35X39X30 MM	5-231, 5-233, 5-235, 5-237, 5-239, 5-241, 6-51, 6-53
321136-0140 ..	BUSHING, 10X12X10 MM	4-51, 4-53, 4-55, 4-57, 4-59, 4-65, 4-67, 4-69, 4-71, 4-73
321138-0183 ..	BUSHING, 12X14X15 MM	5-91
321141-0064 ..	BEARING BUSH W/O FLANGE, 6X8X10 MM	8-135
321141-0104 ..	BEARING BUSH W/O FLANGE, 8X10X12 MM	5-21, 5-23, 8-179, 8-181, 8-189, 8-191
321141-0138 ..	BEARING BUSH W/O FLANGE, 10X12X8 MM	1-343, 8-171, 8-173
321141-0178 ..	BEARING BUSH W/O FLANGE, 12X14X10 MM	8-179, 8-181, 8-189, 8-191
321141-0183 ..	BEARING BUSH W/O FLANGE, 12X14X15 MM	1-345, 1-347
321141-0216 ..	BEARING BUSH W/O FLANGE, 16X18X12 MM	8-179, 8-181, 8-189, 8-191
321141-0260 ..	BEARING BUSH W/O FLANGE, 20X23X20 MM	11-15
321153-0136 ..	FLANGE BUSHING, 10X12X6 MM	5-115, 5-117, 5-119
321155-0062 ..	FLANGE BUSHING, 6X8X6 MM	4-93, 4-95, 4-97, 4-99
321161-0185 ..	FLANGE BUSHING, 12X14X17 MM	8-31
321161-0221 ..	FLANGE BUSHING, 16X18X17 MM	2-179
321306-0105 ..	BALL BEARING, 25X47X12 MM	5-169, 5-171, 5-285, 5-307, 5-313, 5-315
321308-0202 ..	BALL BEARING, 15X32X9 MM	8-99, 8-101, 8-107, 8-109, 8-247
321308-0205 ..	BALL BEARING, 25X47X12MM	5-5, 5-7, 8-153, 8-157, 8-159, 8-243
321308-0207 ..	BALL BEARING, 35X62X14 MM	6-13
321309-0103 ..	BALL BEARING, 17X40X12 MM	5-307, 5-313, 5-315
321309-0116 ..	BALL BEARING, 80X140X26 MM	6-17
321313-0100 ..	BALL BEARING, 10X30X9 MM	1-343, 8-75, 8-155
321313-0102 ..	BALL BEARING, 15X35X11 MM	1-341, 2-11, 8-27, 8-29, 8-57, 8-61, 8-125, 8-163, 8-179, 8-181, 8-189, 8-191, 8-241, 8-245, 8-247, 8-249, 8-251, 8-253
321313-0103 ..	BALL BEARING, 17X40X12MM	2-31, 8-163
321313-0105 ..	BALL BEARING, 25X52X15MM	5-5, 5-7, 5-231, 5-233, 5-235, 5-237, 5-239, 5-241
321313-0107 ..	BALL BEARING, 35X72X17MM	5-231, 5-233, 5-235, 5-237, 5-239, 5-241
321313-0108 ..	BALL BEARING, 40X80X18 MM	6-25, 6-27, 6-51, 6-53
321316-0205 ..	BALL BEARING, 25X62X17 MM	3-21
321316-0206 ..	BALL BEARING, 30X72X19 MM	5-169, 5-171
321330-0106 ..	ANG. BALL BEAR, 30X62X23,8 MM	6-33
321330-0118 ..	ANG. BALL BEAR, 90X160X52,4 MM	6-17, 6-25, 6-27, 6-51, 6-53
321390-0145 ..	STEEL BALL 15MM, RB-15 RS	5-327
342203-0107 ..	NIPPLES, EXT. THREAD, HEXAGON,ÿNO. 209	7-7
342203-0120 ..	NIPPLES, EXT. THREAD, HEXAGON,ÿNO. 209	7-39
342206-0109 ..	BUSHING, TAPERED, INT/EXT. THR NO. R211	1-225, 1-235, 1-317
342217-0103 ..	SLEEVE, REDUCTION, INT, R-2021/2X1/4	7-7
342245-0102 ..	T-PIPE, INT. THREAD, R1/4XKR1/4	2-47, 2-251, 2-253
342700-0110 ..	NIPPLES,HEXAGON,EXT.G-THREAD G1/4"-G1/4"	11-51
342700-0111 ..	NIPPLES,HEXAGON,EXT.G-THREAD G3/8"-G3/8"	7-71, 7-73
342700-0113 ..	NIPPLES,HEXAGON,EXT.G-THREAD G1/2"-G1/2"	1-317, 7-79, 7-81
342700-0116 ..	NIPPLES,HEXAGON,EXT.G-THREAD G1"-G1"	7-49
342700-0203 ..	NIPPLES,HEXAGON,EXT.G-THREAD G3/8"-G1/4"	2-89, 2-251, 2-253
342700-0205 ..	NIPPLES,HEXAGON,EXT.G-THREAD G1/2"-G1/4"	7-79, 8-123
342700-0206 ..	NIPPLES,HEXAGON,EXT.G-THREAD G1/2"-G3/8"	7-81
342701-0201 ..	BUSHING,INT./EXT.G-THREAD G1/4"-G1/8"	2-47, 11-51, 11-57, 11-59
342701-0202 ..	BUSHING,INT./EXT.G-THREAD G3/8"-G1/8"	7-17, 7-27, 7-71, 7-73
342701-0203 ..	BUSHING, INT/EXT. G-THREAD NO. 3/8-1/4	1-317
342701-0205 ..	BUSHING,INT./EXT.G-THREAD G1/2"-G1/4"	2-79, 2-255

Part No	Description	Page No
342701-0206 ..	BUSHING,INT./EXT.G-THREAD G1/2"-G3/8"	7-17
342701-0208 ..	BUSHING, INT/EXT. G-THREAD NO. 3/4-1/4	2-81
342701-0209 ..	BUSHING,INT./EXT.G-THREAD G3/4"-G3/8"	1-317
342703-0208 ..	NUT, PIPES & CONNECTORS,NUT M-8 SS	1-215, 1-217, 2-85, 4-299
342706-0130 ..	STIFFNER SLEEVE FOR HOSE 6X1	1-291, 1-355, 1-357, 2-31, 4-247
342706-0195 ..	STIFFNER SLEEVE FOR HOSE 12X1,5	1-291
342708-0109 ..	REINFORCING RING VSH 15X1 MM	7-25, 7-71, 7-73
342713-0209 ..	PLUG (QUANT.MINIMA= 10PC).	4-143, 4-145, 4-155, 4-157, 4-159, 4-161, 4-199, 4-201
342713-0210 ..	PLUG, EXT THREAD HEX SOCKET	1-257, 1-367, 2-47, 2-161, 2-163, 2-165, 8-237, 8-239
342713-0211 ..	PLUG, EXT THREAD HEX SOCKET 8638-00-380	1-369, 1-371, 1-373, 1-377, 1-379, 2-49, 2-171, 2-173, 2-175, 7-77, 8-235, 8-237, 8-239
342713-0213 ..	PLUG, EXT THREAD HEX SOCKET 8638-00-120	2-249, 2-347, 7-23, 7-49
342715-0100 ..	BLIND PLUG 4 MM	1-369, 1-371, 1-373, 1-377, 1-379
342715-0102 ..	BLIND PLUG 6 MM	1-369, 1-371, 1-373, 1-377, 1-379, 2-9, 2-49, 2-171, 2-173, 2-175, 7-77, 8-235, 8-237, 8-239
342715-0103 ..	BLIND PLUG 8 MM	1-369, 1-371, 1-373, 1-377, 1-379, 2-49, 2-171, 2-173, 2-175, 7-77, 8-237, 8-239
342715-0105 ..	BLIND PLUG 12 MM	2-257, 2-259
342715-0106 ..	BLIND PLUG 14 MM	2-9, 2-257, 2-259
342716-0202 ..	REDUCER 4-6	1-375, 2-155, 2-157, 2-159, 8-121
342716-0203 ..	REDUCER 6-8	1-375, 2-161, 2-163, 2-165, 2-171, 2-173, 2-175, 5-145, 5-147, 5-149, 8-237, 8-239
342716-0205 ..	REDUCER 4-8	1-367
342716-0206 ..	REDUCER 8-10	2-161, 2-163, 2-165
342716-0209 ..	REDUCER 8-12	1-367, 2-47, 2-257, 2-259, 8-235, 8-237, 8-239
342716-0210 ..	REDUCER 6-12	1-291, 1-355, 1-357, 1-367, 1-375, 2-47
342716-0211 ..	REDUCER 12-14	2-257, 2-259, 7-79
342720-0114 ..	CONN. STR. GA-15-G1/2	2-249, 7-25, 7-71, 7-73
342720-0119 ..	CONN. STR., GA-22-G3/4	7-23
342722-0197 ..	STRAIGHT COUPLING	1-191, 8-139, 8-167, 8-185, 8-197
342722-0202 ..	PIPE COUPLING 1/8" D=6MM	1-175, 1-177, 1-199, 1-227, 1-231, 2-89, 2-129, 5-211, 8-17, 8-97, 8-105, 8-169
342722-0203 ..	STRAIGHT COUPLING	2-23, 2-47, 5-279, 5-281
342722-0204 ..	PIPE COUPLING	5-173, 5-175, 5-177, 8-167
342722-0205 ..	STRAIGHT COUPLING D=8-G1/4"	2-35, 7-45
342722-0206 ..	STRAIGHT COUPLING D=8-G3/8"	7-77, 8-237, 8-239
342722-0209 ..	STRAIGHT COUPLING D=12-G1/4"	1-367
342722-0211 ..	STRAIGHT COUPLING D=10-G1/4"	5-173, 5-175, 5-177
342724-0102 ..	CONN. STR. PIPE GI 6-G1/8	1-355, 1-357
342725-0102 ..	CONN. STR. PIPE GAI06LR G1/8	8-17
342727-0214 ..	CONN. PIPE G-15-L/SY	2-63
342728-0102 ..	PIPE COUPLING 6 MM	5-145, 5-147, 5-149, 8-121
342728-0103 ..	PIPE COUPLING 8 MM	5-67, 5-69, 5-71, 5-73, 5-75
342728-0104 ..	PIPE COUPLING 10 MM	2-161, 2-163, 2-165
342728-0110 ..	PIPE COUPLING 14 MM	2-257, 2-259
342732-0104 ..	ELBOW PIPE JOINT, EXT.THREAD, D=8MM-G1/4	5-67, 5-69, 5-71, 5-73, 5-75
342732-0105 ..	ELBOW PIPE JOINT ,EXT.THREAD,D=8 MM R3/8	8-237, 8-239
342735-0102 ..	ELBOW PIPE JOINT	2-243, 2-245, 2-247, 8-97
342735-0103 ..	ELBOW PIPE JOINT	2-155, 2-157, 2-159, 2-161, 2-163, 2-165, 7-21, 8-237, 8-239
342735-0104 ..	ELBOW PIPE JOINT	2-155, 2-157, 2-159
342735-0109 ..	ELBOW PIPE JOINT	1-291, 1-367, 1-375, 2-257, 2-259, 8-237, 8-239
342735-0110 ..	ELBOW PIPE	2-257, 2-259
342738-0208 ..	ADJUSTABLE ELBOW CONNECTION,EXT 8-G1/4	2-83, 2-85
342738-0221 ..	ADJUSTABLE ELBOW CONNECTION,EXT 15-G1/2	1-225, 1-317
342741-0209 ..	CONN. T-PIPE TE-12-R3/8	1-317
342742-0103 ..	T-COUPLING,ADJUST,F.PLASTIC TUBE 6-G1/4"	8-121
342744-0114 ..	CONN. ELBOW ADJ.,INT 15	2-79
342747-0102 ..	CONN. T-PIPE T-6	1-355, 1-357
342748-0100 ..	T-CONNECTION 4MM	5-181, 5-183
342748-0102 ..	T-CONNECTION 6MM	1-375, 2-155, 2-157, 2-159, 5-5, 5-7, 5-145, 5-147, 5-149, 8-167, 8-185, 8-197
342748-0103 ..	T-CONNECTION 8MM	1-257, 1-367, 2-47, 2-257, 2-259
342748-0109 ..	T-CONNECTION 12MM	1-355, 1-357, 1-367, 1-375, 2-47, 7-77, 8-237, 8-239
342748-0110 ..	T-CONNECTION 14MM	2-257, 2-259, 7-79
342751-0215 ..	PIPE FITTING TEE	1-291
342751-0221 ..	PIPE FITTING TEE	1-291
342752-0104 ..	CONN. STR. GA-10-G1/4	2-81
342752-0114 ..	CONN. STR. GA-15-G1/2	2-83
342767-0100 ..	CONN. BULKHEAD G1/8	1-387, 1-389
342767-0104 ..	CONN. BULKHEAD G1/4	2-9, 2-177, 2-255
342768-0102 ..	BULKHEAD CONNECTOR, 6 MM	1-285, 2-9, 2-37
342768-0103 ..	BULKHEAD CONNECTOR, 8 MM	2-47, 2-153, 2-155, 2-157, 2-159, 2-161, 2-163, 2-165
342768-0104 ..	BULKHEAD CONNECTOR, 10 MM	2-155, 2-157, 2-159
342768-0110 ..	BULKHEAD CONNECTOR, 14 MM	2-9, 2-257, 2-259
342770-0101 ..	RAIGHT COUPLING INT, D=4 MM - G1/8	1-367, 1-375, 2-47, 2-161, 2-163, 2-165, 7-77
342770-0105 ..	STRAIGHT COUPLING INT, D=6 MM - G1/8	8-97, 8-237, 8-239
342770-0107 ..	STRAIGHT COUPLING INT, D=8 MM - G1/8	8-167
342772-0122 ..	ELBOW FITTING, 8 - G1/4	2-161, 2-163, 2-165
342796-0108 ..	CONN. BANJO,WH 10-G1/4	2-81
342796-0114 ..	CONN. BANJO,WH 15-G1/2	2-81
342797-0121 ..	CONN. BANJO, RINGPIECE 6-1/8	1-355, 1-357
342797-0122 ..	CONN. BANJO, RINGPIECE 6-1/4	1-291
342800-1103 ..	DIAPHRAGM FDA PTFE/EPDM 5E, SEAT S. 25	1-303
342800-1303 ..	ACTUATOR, SS, N.O. SEAT S. 25	1-303
342800-1503 ..	VALVE ASSEMBLING KIT, SEAT S. 25	1-303
342840-0101 ..	CLAMP, 12,7 AND 19,1 MM 3-A PCS+PMCS	1-285

Part No	Description	Page No
342840-0103 ..	CLAMPING PIECE DN 1-11/2, GH13LAH112304N	1-285, 1-297, 1-299, 1-303, 1-305, 1-307, 1-309, 1-311, 2-125
342840-0105 ..	CLAMPING PIECE, GH13LAH2304NO79612011202 ..	1-225, 1-235, 1-265, 1-303, 1-309, 2-347
342840-0107 ..	CLAMP 3"	1-265, 2-347
342840-0108 ..	CLAMP, 101,6 MM 3-A PCS+PMCS	1-225
342850-0107 ..	GASKET, FDA, 3-A, 3	2-347
342850-0303 ..	GASKET 22,7X49,1X5,2 MM 1" FDA	1-307
342850-0304 ..	GASKET 35,4X49,1X5,2 1"1/2 FDA	1-297, 1-299, 1-303, 1-305, 1-307, 1-309, 1-311, 2-125, 2-127, 10-9, 10-15, 10-17, 10-19, 10-21, 10-23, 10-25
342850-0305 ..	GASKET 47,8X62,6X5,2 MM 2" FDA 3-A	1-265, 1-297, 1-299, 1-303, 1-309, 2-347
342850-0306 ..	GASKET 60,3X76,1X5,2 MM 2"1/2 FDA 3-A	1-297, 1-299, 10-9
342850-0307 ..	GASKET 72,9X89,6X5,2 MM 3" FDA 3-A	1-265
342850-0405 ..	GASKET 47,8X62,6X5,2 MM 2" FDA	1-225, 1-235
342850-0408 ..	GASKET 97X117,7X5,2 MM 4" FDA	1-225
342901-0101 ..	HOSE NIPPLE, EXT.THR. R1/8-7 MM	2-25
342901-0102 ..	HOSE NIPPLE, EXT.THR. R1/4-7 MM	7-17, 7-71, 7-73
342901-0105 ..	HOSE NIPPLE, EXT.THR. R1/2-12 MM	1-235, 2-145, 2-147, 2-249, 7-25, 7-37, 7-71, 7-73
342920-0116 ..	STRAIGHT COUPLING,EXT.THREADED 6/4-R1/2"	2-249
342920-0122 ..	STRAIGHT COUPLING,EXT.THREADED 8/6-R1/4"	2-177
342920-0124 ..	STRAIGHT COUPLING,EXT.THREADED 8/6-R1/2"	7-71, 7-73
342920-0132 ..	STRAIGHT COUPL.,EXT.THREADED 10/8-R1/4"	2-255
342920-0151 ..	STRAIGHT COUPL.,EXT.THREAD.15/12,5-R1/2"	1-235, 2-249
342921-0113 ..	STRAIGHT COUPLING,EXT.THREADED 6/4-G1/8"	1-387, 1-389, 2-251, 2-253, 2-293, 6-73, 11-57, 11-59
342921-0114 ..	STRAIGHT COUPLING,EXT.THREADED 6/4-G1/4"	2-251, 2-253, 11-57, 11-59
342921-0115 ..	STRAIGHT COUPLING,EXT.THREADED 6/4-G3/8"	2-251, 2-253, 7-71, 7-73
342921-0121 ..	STRAIGHT CPLNG,EXT.THREADED 8/6-G1/8INCH	5-51, 5-53, 5-55, 5-131, 5-133, 5-135
342921-0122 ..	STRAIGHT COUPLING,EXT.THREADED 8/6-G1/4"	1-257, 2-249
342923-0122 ..	STRAIGHT COUPL.,INT.THREADED 8/6-G1/4"	2-35
342930-0133 ..	ELBOW 90 COUPL.,EXT.THREADED 10/8-R3/8"	7-71, 7-73
342931-0121 ..	ELBOW 90 COUPL.,EXT.THREAD 8/6-G1/8"	1-11, 5-41, 5-43, 5-51, 5-53, 5-55, 5-105, 5-107, 5-131, 5-133, 5-135, 6-43, 6-45, 7-17
342931-0122 ..	ELBOW 90 COUPL.,EXT.THREAD 8/6-G1/4"	1-257
342941-0114 ..	T-COUPLING,EXT.THREAD 6/4-G1/4"	2-243, 2-245, 2-247
342941-0122 ..	T-COUPLING,EXT.THREAD 8/6-G1/4"	1-257
342980-0114 ..	BANJO-CONNECTION,RING 6/4-G1/4"	11-57, 11-59
342980-0121 ..	BANJO-CONNECTION,RING 8/6-G1/8 .	4-115, 4-117, 4-119, 4-121, 4-175, 4-177, 4-179, 4-181
342980-0122 ..	BANJO-CONNECTION,RING 8/6-G1/4 INCH	2-81
342980-0303 ..	BANJO-HOLLOW BOLT COUPL,EXT.THR.01-G1/8	1-355, 1-357, 4-115, 4-117, 4-119, 4-121, 4-175, 4-177, 4-179, 4-181
342980-0304 ..	BANJO-HOLLOW BOLT COUPL,EXT.THR.01-G1/4	1-291, 2-81
342980-0314 ..	BANJO-HOLLOW BOLT COUPL,EXT.THR.02-G1/4	11-57, 11-59
342981-0122 ..	BANJO CONNEC,RING,FOR PLAST.TUBE 8-G1/4"	5-35, 5-37, 5-39, 5-95, 5-97
342991-0100 ..	HOSE CLIP,WORM DRIVE TYPE 10-13	1-291, 2-35, 7-17, 7-37, 11-71
342991-0101 ..	HOSE CLIP,WORM DRIVE TYPE (13)-16	1-235, 2-17, 2-19, 2-25, 2-37, 2-89, 2-249, 2-347, 7-13, 7-15, 7-17, 7-19, 7-23, 11-71
342991-0102 ..	HOSE CLIP,WORM DRIVE TYPE (16)-19	2-9, 2-37, 2-65, 2-79, 2-145, 2-147, 7-49
342991-0103 ..	HOSE CLIP,WORM DRIVE TYPE (19)-23	1-317, 1-319, 2-27
342991-0104 ..	HOSE CLIP,WORM DRIVE TYPE (23)-27	2-17, 2-19, 2-127, 2-249
342991-0105 ..	HOSE CLIP,WORM DRIVE TYPE (27)-30	2-13, 2-63, 2-133, 2-135, 2-137
342991-0106 ..	HOSE CLIP,WORM DRIVE TYPE (30)-36	2-27, 2-63
342991-0109 ..	HOSE CLIP,WORM DRIVE TYPE (48)-50	1-227, 1-307, 2-125, 2-347
342991-0110 ..	HOSE CLIP,WORM DRIVE TYPE (54)-63	2-17, 2-19, 2-27
342991-0111 ..	HOSE CLIP,WORM DRIVE TYPE (63)-73	1-207
342991-0114 ..	HOSE CLIP,WORM DRIVE TYPE (93)-110	2-179
344502-0021 ..	GREASE NIPPLE STRAIGHT M6	5-169, 5-171, 5-285, 5-289, 5-291, 5-293, 5-307, 5-313, 5-315
346800-0109 ..	SILENCER FILTER R1/8"	2-89
346800-0110 ..	SILENCER FILTER R1/4"	1-257, 1-351, 1-367, 1-375
350001-0006 ..	PUSH-IN FITTING QS-F-G1/8-6	5-181, 5-183
350001-0008 ..	PUSH-IN FITTING QS-F-G1/4-6	1-303, 2-243, 2-245, 2-247
350002-0001 ..	PUSH-IN L-FITTING QSL-F-M5-4	5-319
350002-0002 ..	PUSH-IN L-FITTING QSL-F-M5-6	5-5, 5-7
350002-0006 ..	PUSH-IN L-FITTING QSL-F-G1/8-6	1-263, 2-143, 5-5, 5-7, 5-115, 5-117, 5-119, 8-105, 8-153, 8-157, 8-159
350002-0007 ..	PUSH-IN L-FITTING QSL-F-G1/8-8	2-243, 2-245, 2-247
350002-0009 ..	PUSH-IN L-FITTING QSL-F-G1/4-8	2-47
350002-0011 ..	PUSH-IN L-FITTING QSL-F-G1/4-12	1-375
350002-0012 ..	PUSH-IN L-FITTING QSL-F-G3/8-8	2-49, 8-235
350002-0016 ..	PUSH-IN L-FITTING QSL-F-G1/2-12	8-123
350004-0003 ..	PUSH-IN L-FITTING QSL-F-8	8-235
350006-0003 ..	PUSH-IN FITTING QS-F-8H-6	1-367
350006-0007 ..	PUSH-IN FITTING QS-F-12H-6	2-47
350010-0002 ..	PUSH-IN BULKHEAD FITTING QSS-F-6	2-155, 2-157, 2-159
350013-0001 ..	PLUG QSC-4H	2-257, 2-259
350013-0002 ..	PLUG QSC-6H	2-155, 2-157, 2-159
350013-0003 ..	PLUG QSC-8H	2-257, 2-259
350013-0005 ..	PLUG QSC-12H	8-237, 8-239
350015-0001 ..	Y-FITTING QSY-F-6	5-145, 5-147, 5-149
351120-0126 ..	CABLE SILFLEX SIHF 2X4 0046025	8-139
351120-0145 ..	CABLE SILFLEX SIHF 3X2,5 0046020	8-145
351120-0264 ..	CABLE SILFLEX SIHF 4X1,5 00460153	1-221, 1-315
351120-0268 ..	CABLE SILFLEX SIHF 4X10 00460373	1-399, 1-401
351150-0166 ..	CABLE OLFLEX 4X4 MM2 LIGHT/GREY	2-117, 2-119, 7-41, 7-43
351150-0196 ..	CABLE OLFLEX 7X4 MM2 LIGHT/GREY	1-327

Part No	Description	Page No
351150-0403 ..	CABLE OLFLEX 3X0,75 MM2 LIGHT/GREY	1-259, 1-387, 1-389, 2-55, 2-57, 2-81, 2-83, 2-103 ..... 2-117, 2-119, 2-185, 2-187, 2-189, 2-191, 7-35, 7-71, 7-73, 8-279, 8-301, 11-89
351150-0404 ..	CABLE OLFLEX 4X0,75 MM2 LIGHT/GREY	1-259, 1-383, 1-387, 1-389, 2-55, 2-57, 2-117, 2-119
351150-0405 ..	CABLE OLFLEX 5X0,75 MM2 LIGHT/GREY	1-151, 1-383, 1-387, 1-389, 2-55, 2-57, 2-117, 2-119 ..... 2-185, 2-187, 2-189, 2-191, 5-327, 5-329, 6-79, 8-111, 8-113, 8-291, 11-89
351150-0406 ..	CABLE OLFLEX 7X0,75 MM2 LIGHT/GREY	2-55, 2-57, 2-79, 2-117, 2-119, 2-185, 2-187, 2-189 ..... 2-191, 7-31, 8-111, 8-113
351150-0407 ..	CABLE OLFLEX 12X0,75 MM2 LIGHT/GREY	..... 1-387, 1-389, 8-287, 8-289, 8-305
351150-0412 ..	CABLE OLFLEX 3X1,5 MM2 LIGHT/GREY	1-315, 2-117, 2-119, 2-185, 2-187, 2-189, 2-191 ..... 2-311, 2-321, 8-111, 8-113, 8-199, 8-201
351150-0413 ..	CABLE OLFLEX 4GX1,5 MM2 LIGHT/GREY	..... 2-185, 2-187, 2-189, 2-191, 8-199, 8-201
351150-0414 ..	CABLE OLFLEX 5X1,5 MM2 LIGHT/GREY	..... 2-189, 2-191
351150-0415 ..	CABLE OLFLEX 7X1,5 MM2 LIGHT/GREY	..... 8-199, 8-201
351150-0417 ..	CABLE OLFLEX 3X2,5 MM2 LIGHT/GREY	..... 1-259, 2-185, 2-187, 2-189, 2-191
351150-0418 ..	CABLE OLFLEX 4X2,5 MM2 LIGHT/GREY	1-399, 1-401, 2-31, 2-55, 2-57, 2-81, 2-117, 2-119 ..... 7-17, 7-27
351150-0419 ..	CABLE OLFLEX 5X2,5 MM2 LIGHT/GREY	..... 2-185, 2-187
351150-0425 ..	CABLE OLFLEX 25X0,75 MM2 LIGHT/GREY	1-383, 1-387, 1-389, 2-55, 2-57, 2-117, 2-119 ..... 2-185, 2-187, 2-189, 2-191, 7-69, 8-199, 8-201, 9-21, 11-89
351150-0430 ..	CABLE OLFLEX 5X35 MM2 LIGHT/GREY	..... 2-185, 2-187, 2-189, 2-191
351150-0431 ..	CABLE OLFLEX 2X0,75 MM2 LIGHT/GREY	..... 7-17, 7-27, 8-45, 8-111, 8-113
351150-0432 ..	CABLE OLFLEX 5X10 MM2 LIGHT/GREY	 9-29
351160-0102 ..	WIRE AWM 1X0,75 MM2 DARKBLUE	..... 1-387, 1-389, 7-69, 9-47, 11-85
351160-0104 ..	WIRE AWM 1X1,5 MM2 DARKBLUE	 9-47
351160-0105 ..	WIRE AWM 1X2,5 MM2 DARKBLUE	 9-47
351160-0106 ..	WIRE AWM 1X4 MM2 DARKBLUE	 9-47
351161-0102 ..	WIRE AWM 1X0,75 MM2 LIGHTBLUE	 9-47
351161-0104 ..	WIRE AWM 1X1,5 MM2 LIGHTBLUE	 9-47
351161-0105 ..	WIRE AWM 1X2,5 MM2 LIGHTBLUE	 9-47
351161-0110 ..	WIRE AWM 1X25 MM2 LIGHTBLUE	 7-11
351161-0111 ..	WIRE AWM 1X35 MM2 LIGHTBLUE	..... 7-11, 9-47
351162-0102 ..	WIRE AWM 1X0,75 MM2 YELLOW-GREEN	..... 2-39, 9-47
351162-0104 ..	WIRE AWM 1X1,5 MM2 YELLOW-GREEN	 9-47
351162-0105 ..	WIRE AWM 1X2,5 MM2 YELLOW-GREEN	 9-47
351162-0106 ..	WIRE AWM 1X4 MM2 YELLOW-GREEN	 9-47
351162-0107 ..	WIRE AWM 1X6 MM2 YELLOW-GREEN	 9-47
351162-0109 ..	WIRE AWM 1X16 MM2 YELLOW-GREEN	..... 7-11, 9-47
351162-0110 ..	WIRE AWM 1X25 MM2 YELLOW-GREEN	 8-95
351164-0102 ..	WIRE AWM 1X0,75 MM2 BLACK	 9-47
351164-0104 ..	WIRE AWM 1X1,5 MM2 BLACK	 9-47
351164-0105 ..	WIRE AWM 1X2,5 MM2 BLACK	 9-47
351164-0106 ..	WIRE AWM 1X4 MM2 BLACK	 9-47
351164-0107 ..	WIRE AWM 1X6 MM2 BLACK	 9-47
351164-0111 ..	WIRE AWM 1X35 MM2 BLACK	..... 7-11, 9-47
351179-0102 ..	CABLE AWM 1X075 MM2 BLACK	 8-285
351416-0010 ..	MINIATURE CIRC. BREAK., FAZ -D1 1-POLE	 9-139
351416-0020 ..	MINIATURE CIRC. BREAK., FAZ -D2 1-POLE	 9-139
351416-0060 ..	MINIATURE CIRC. BREAK., FAZ -D6 1-POLE	..... 9-139, 9-145, 9-147
351416-0100 ..	MINIATURE CIRC. BREAK., FAZ -D10 1-POLE	 9-139
351416-0160 ..	MINIATURE CIRC. BREAK., FAZ -D16 1-POLE	..... 9-33, 9-139, 9-145, 9-147
351418-0060 ..	MINIATURE CIRC. BREAK., FAZ-D6/3 3-POLE	 9-139
351418-0100 ..	MINIATURE CIRC. BREAK., FAZ-D10/3 3-POLE	 9-139
351418-0400 ..	MINIATURE CIRC. BREAK.,FAZ-D40/3 3-POLE	 9-139
351501-0030 ..	ETHERNET PATCH CABLE, FL CAT5 PATCH 3,0	..... 9-149, 9-151
352103-0100 ..	CABLE GLAND, STR 9, PR15,2/PG9	..... 1-399, 1-401, 2-37, 2-53, 2-195, 2-197, 2-199, 7-69
352103-0101 ..	CABLE GLAND, ST 9, PR15,2/PG9	1-225, 1-235, 1-257, 1-259, 1-265, 1-311, 1-321, 1-323 1-327, 1-351, 1-383, 1-387, 1-389, 1-399, 1-401, 2-25, 2-37, 2-83, 2-89, 2-91, 2-251, 2-253, 7-31 ..... 7-35, 7-69, 7-71, 7-73, 7-79, 8-65, 8-67, 8-69, 8-71, 8-199, 8-201
352103-0106 ..	CABLE GLAND, ST 11, PR18,6/PG11	1-257, 1-291, 1-399, 1-401, 2-53, 2-81, 2-103, 2-117 ..... 2-119, 2-185, 2-187, 2-195, 2-197, 2-199, 5-173, 5-175, 5-177, 7-9, 7-11, 8-199, 8-201
352103-0108 ..	CABLE GLAND, ST 13,5 , PR20,4/PG13,5	1-259, 1-399, 1-401, 2-53, 2-55, 2-57, 2-103, 2-117 2-119, 2-185, 2-187, 2-189, 2-191, 2-195, 2-197, 2-199, 5-327, 5-329, 6-79, 7-17, 7-27, 7-31 ..... 8-177, 8-199, 8-201, 8-247, 9-49, 9-51
352103-0110 ..	CABLE GLAND, STR 16, PR22,5/PG16	2-31, 2-103, 2-117, 2-119, 2-133, 2-135, 2-137, 2-189 ..... 2-191, 2-195, 2-197, 2-271, 7-27, 7-31, 7-69, 8-45, 8-199, 8-201, 8-291
352103-0111 ..	CABLE GLAND, ST 16, PR22,5/PG16	1-207, 1-387, 1-389, 1-399, 1-401, 2-81, 2-99, 2-101 ..... 2-185, 2-187, 7-41, 7-43, 8-199, 8-201, 8-287, 8-289
352103-0115 ..	CABLE GLAND, STR 21, PR28,3/PG21	1-327, 2-181, 2-185, 2-187, 2-189, 2-191, 7-41, 7-43 ..... 8-199, 8-201
352103-0116 ..	CABLE GLAND, ST 21, PR28,3/PG21	..... 1-383, 1-387, 1-389, 1-399, 1-401, 2-99, 2-101, 7-69
352103-0120 ..	CABLE GLAND, STR 29, PR37,0/PG29	1-399, 1-401, 2-55, 2-57, 2-117, 2-119, 2-185, 2-187 ..... 2-189, 2-191, 7-69
352103-0121 ..	CABLE GLAND, ST 29, PR37,0/PG29	1-399, 1-401, 2-53, 2-55, 2-57, 2-103, 2-117, 2-119 ..... 2-185, 2-187, 2-189, 2-191, 2-195, 2-197, 2-199, 8-199, 8-201
352103-0123 ..	CABLE GLAND, ST 42, PR54,0/PG42	 7-11
352113-0101 ..	CABLE TIE, BLACK 92X2,5 MM	1-13, 2-89, 2-339, 4-143, 4-145, 4-199, 4-201, 4-299, 5-169 ..... 5-171, 5-231, 5-233, 5-235, 5-237, 5-239, 5-241
352113-0102 ..	CABLE TIE, BLACK 188X4,8 MM	2-309, 2-319, 5-41, 5-43, 5-105, 5-107, 5-169, 5-171, 5-231 ..... 5-233, 5-235, 5-237, 5-239, 5-241, 8-25, 8-131, 11-71
352113-0103 ..	CABLE TIE, BLACK 290X7,6 MM	..... 3-13, 3-31
352113-0104 ..	CABLE TIE, BLACK 300X4,8 MM	 2-249
352113-0203 ..	ANCHOR PLATES FOR STRIPS, TYPE TM3S8-M0	..... 7-13, 7-15, 8-135, 9-19, 9-49, 9-51
352113-0204 ..	ANCHOR PLATES FOR STRIPS, TYPE TM3S25-M	1-15, 1-17, 1-161, 1-163, 1-315, 1-333 ..... 1-335, 2-55, 2-57, 2-117, 2-119, 2-221, 2-223, 2-239, 2-241, 3-13, 3-31

Part No	Description	Page No
352113-0205 ..	ANCHOR PLATES FOR STRIPS, TYPE TM2S8-C10	1-341, 2-89, 2-309, 2-319, 7-49, 8-25, 8-31 8-97, 8-111, 8-113, 8-131, 8-133, 8-135, 8-139, 8-161, 8-171, 8-173, 8-235, 8-241, 8-245, 9-49 9-51, 9-71, 9-73, 9-149, 9-151
352113-0206 ..	ANCHOR PLATES FOR STRIPS, TYPE ABM100-AT	2-339
353001-0103 ..	END SLEEVE 0,75 MM2	5-327
353001-0116 ..	END SLEEVE H0.5/14 ORANGE	1-399, 1-401
353021-0120 ..	FEED THROUGH TERMINAL, 10215.8	9-155, 9-159
353021-0127 ..	TERMINAL DISCONNECTABLE, WTR 2,5+WSD 2,5	1-397, 9-95
353021-0212 ..	FEED THROUGH TERMINAL, 10200.0	2-103, 2-195, 2-197, 9-145, 9-147
353021-0213 ..	FEED THROUGH TERMINAL, 10201.0	1-261, 1-329, 8-227, 8-229
353021-0215 ..	FEED THROUGH TERMINAL, 10203.0	9-29
353021-0216 ..	FEED THROUGH TERMINAL, 10200.8	7-31, 7-69
353021-0226 ..	BY-PASS TERMINAL WDU 35	9-123, 9-125
353021-0301 ..	TERMINALS,TRIPLE-LEVEL, DLI 2,5/35 PA	2-53, 2-103, 2-195, 2-197, 2-199, 8-219, 8-221 8-223, 8-225
353021-0302 ..	TERMINALS,TRIPLE-LEVEL, DLD 2,5/35 PA	1-261, 1-385, 1-395, 1-397, 8-219, 8-221, 8-223, 8-225
353022-0002 ..	NEUTRAL TERMINAL, 10107.8	9-145, 9-147
353022-0004 ..	NEUTRAL TERMINAL, 10109.8	9-145, 9-147
353024-0204 ..	EARTH TERMINAL WPE 2,5	1-329, 2-53, 2-195, 2-197, 2-199, 7-69, 9-133, 9-145, 9-147
353024-0205 ..	EARTH TERMINAL, 1010.1	1-261, 1-385, 1-395, 1-397, 7-31, 7-69, 8-223, 8-225, 8-227, 8-229 9-155, 9-159
353024-0206 ..	EARTH TERMINAL, 1010.2	9-29, 9-133
353024-0207 ..	EARTH TERMINAL, 1010.3	9-29, 9-133
353024-0209 ..	EARTH TERMINAL, 1010.5	7-11, 9-123, 9-125, 9-133
353031-0203 ..	END SUPPORT, WEW 35/2	2-53, 2-103, 2-195, 2-197, 2-199, 7-31, 7-69, 8-219, 8-221, 8-227 8-229, 9-25, 9-29, 9-95, 9-101, 9-133, 9-145, 9-147
353032-0004 ..	END PLATE WAP 2,5-10 BEIGE	1-329, 1-397, 2-103, 2-195, 2-197, 9-29, 9-95, 9-145, 9-147
353032-0009 ..	END PLATE, WAP FOR WDK	2-103, 2-195, 2-197, 2-199, 8-219, 8-221, 8-223, 8-225, 9-25 9-95, 9-101
353032-0010 ..	END PLATE WAP	9-155, 9-159
353032-0013 ..	END PLATE, 13818.6	8-219, 8-221, 8-223, 8-225
353032-0301 ..	END PLATE WAP, 13132.6	2-53, 2-103, 2-195, 2-197, 2-199, 8-219, 8-221, 8-223, 8-225
353032-0302 ..	END PLATE, AP DLD2,5 DB	1-261, 1-385, 1-395, 1-397, 8-223, 8-225
353033-0104 ..	END PLATE, 10502.8	9-145, 9-147
353034-0026 ..	BRIDGE CONNECTOR, WQV 35/2, 10530.6	11-87
353034-0030 ..	BRIDGE CONNECTOR WQV 2,5/10, 10544.6	1-329, 2-103, 2-195, 2-197, 2-199, 7-31, 7-69 9-25, 9-29, 9-95, 9-101, 9-145, 9-147, 9-155
353034-0031 ..	BRIDGE CONNECTOR, WQV 4/10, 10520.6	8-227, 8-229
353034-0402 ..	BRIDGE CONNECTOR Q3, 13126.0	2-311, 2-321
353034-0404 ..	BRIDGE CONNECTOR Q10, 13131.0	1-261, 1-385, 1-395, 1-397, 2-53, 2-103, 2-195, 2-197 2-199, 8-219, 8-221, 8-223, 8-225
353041-0001 ..	BUS BAR RAIL 10X3MM SSCH	9-145, 9-147
353041-0106 ..	HOLDER ZB35 K 5026.8	9-145, 9-147
353042-0005 ..	RAIL TS 35/7.5	7-11, 9-21, 9-25, 9-27, 9-29, 9-31, 9-33
353101-0118 ..	CABLE SHOE 0,5-1,5MM2 M3 RED	2-39
353101-0130 ..	CABLE SHOE 1,5-2,5MM2 M4 BLUE	2-349, 2-351
353101-0132 ..	CABLE SHOE 1,5-2,5MM2 M5 BLUE	6-43, 6-45, 8-145
353101-0153 ..	CABLE SHOE 4,0-6,0MM2 M6 YELLOW	2-185, 2-187, 2-189, 2-191
353104-0130 ..	CABLE SHOE, RING UNINS., YAV 025 M 4	8-145
353104-0140 ..	CABLE SHOE, RING UNINS., YAV 06 M 4	8-139
353104-0168 ..	CABLE SHOE, RING UNINS., YAV 16 M 6	7-11
353104-0175 ..	CABLE SHOE, RING UNINS., YAV 25 M 6	8-95
353105-0117 ..	PIN CABLE SHOE 0,75-1,5MM2 RED A1519SR	2-39
353105-0200 ..	PIN CABLE SHOE A4630SR	7-11
353240-0002 ..	GLAND W/O INSERT PG11 NORMAL	2-311, 2-321, 2-349, 2-351, 5-333, 6-83
353240-0003 ..	GLAND W/O INSERT PG13,5 NORMAL	2-189, 2-191
353240-0005 ..	GLAND W/O INSERT PG21 NORMAL	1-399, 1-401, 2-53, 2-99, 2-101, 2-103, 2-195, 2-197 8-199, 8-201
353240-0006 ..	GLAND W/O INSERT PG29 NORMAL	1-259, 1-333, 1-335, 1-399, 1-401, 2-189, 2-191
353241-0002 ..	GLAND W/O INSERT PG11 EXTENDED	2-311, 2-321, 5-333, 6-83
353241-0003 ..	GLAND W/O INSERT PG21 EXTENDED	2-185, 2-187, 2-189, 2-191
353242-0005 ..	HOSE GLAND W/O INSERT PG9 NORMAL	7-19, 7-69
353243-0001 ..	HOSE GLAND W/O INSERT PG9 EXTENDED	1-15, 1-17, 1-143, 1-145, 1-221, 1-223, 1-229 1-231, 1-235, 1-255, 1-259, 1-285, 1-315, 1-319, 1-345, 1-347, 1-383, 1-387, 1-389, 1-399, 1-401, 1-413
353243-0002 ..	HOSE GLAND W/O INSERT PG11 EXTENDED	2-195, 2-197
353243-0003 ..	HOSE GLAND W/O INSERT PG11 EXTENDED	1-309, 1-315, 1-367, 1-375, 1-383, 1-387 1-389, 1-399, 1-401, 1-413
353243-0004 ..	HOSE GLAND W/O INSERT PG13,5 EXTENDED	1-399, 1-401, 1-413
353243-0005 ..	HOSE GLAND W/O INSERT PG16 EXTENDED	1-259, 1-285, 1-399, 1-401, 1-413, 2-189 2-191, 8-305
353243-0007 ..	HOSE GLAND W/O INSERT PG21 EXTENDED	1-259, 1-399, 1-401, 1-413, 8-177
353243-0008 ..	HOSE GLAND W/O INSERT PG29 EXTENDED	2-185, 2-187, 2-189, 2-191, 8-177
353243-0009 ..	HOSE GLAND W/O INSERT PG13,5 EXTENDED	1-21, 1-151, 1-387, 1-389, 1-399, 1-401
353247-0005 ..	HOSE GLAND EMC PG21 EXTENDED	2-185, 2-187, 2-189, 2-191, 5-173, 5-175, 5-177, 6-43, 6-45
353249-0003 ..	INSERT, SINGLE HOLE, E151/11	2-311, 2-321, 5-333, 6-83
353249-0008 ..	INSERT, SINGLE HOLE, EK 152/7	1-15, 1-17, 1-221, 1-229, 1-231, 1-255, 1-259, 1-315, 1-345 1-347, 1-387, 1-389, 1-399, 1-401, 1-413
353249-0009 ..	INSERT, SINGLE HOLE, EK 152/9	1-143, 1-145, 1-285, 1-319, 1-383, 1-387, 1-389, 1-399 1-401
353249-0011 ..	INSERT, SINGLE HOLE, EK 153/11	1-7, 1-9, 1-21, 1-139, 1-151, 1-153, 1-201, 1-221, 1-309 1-315, 1-367, 1-375, 1-383, 1-387, 1-389, 1-399, 1-401, 1-413, 1-421
353249-0013 ..	INSERT, SINGLE HOLE, EK 154/13	1-259, 1-315, 1-413
353249-0014 ..	INSERT, SINGLE HOLE, EK 154/16	1-399, 1-401, 8-305
353249-0036 ..	INSERT, MULTI HOLE, EK152 M 2X4	1-223, 1-387, 1-389, 1-399, 1-401, 2-195, 2-197, 2-311

Part No	Description	Page No
		2-321, 5-333, 6-83
353249-0042 ..	INSERT, SOLID, E152G	2-189, 2-191
353249-0049 ..	INSERT, SOLID, EK155G	2-189, 2-191
353249-0051 ..	INSERT, MULTI HOLE, E154M4X6	1-399, 1-401, 8-199, 8-201
353249-0054 ..	INSERT, SINGLE HOLE, EK 156/25	8-251, 8-253
353249-0060 ..	INSERT, MULTI HOLE, E155M2X13	1-399, 1-401
353249-0061 ..	INSERT, SINGLE HOLE, EK 155/20	1-399, 1-401
353249-0066 ..	INSERT, MULTI HOLE, E155M1X6/1X10	1-399, 1-401
353249-0067 ..	INSERT, SINGLE HOLE, E150/7	7-19, 7-69
353249-0079 ..	INSERT, MULTI HOLE, E155M8X5,5	1-333, 1-335
353249-0301 ..	SEALING PIN, 4X20	2-189, 2-191, 2-321, 5-333, 6-83
353249-0303 ..	SEALING PIN, 5,3X25	2-53
353250-0032 ..	GLAND, LOCK NUT M32X1,5	1-219
353250-0050 ..	GLAND, LOCK NUT M50X1,5	9-71, 9-73
353300-0001 ..	SHRINKABLE HOSE	1-399, 1-401
353300-0006 ..	SHRINKABLE HOSE	1-399, 1-401
353300-0008 ..	SHRINKABLE HOSE	1-399, 1-401
353300-0010 ..	SHRINKABLE HOSE	1-399, 1-401
354000-0040 ..	MINIATURE CIRCUIT BREAKER, FAZ-C4/1	9-145, 9-147
354000-0100 ..	MINIATURE CIRCUIT BREAKER, FAZ-C10/1	9-33, 9-139, 9-145, 9-147
359000-0025 ..	WIRE MARKING, YELLOW, PA3/6"-"	2-257, 2-259
359000-0101 ..	WIRE MARKING, YELLOW, PY01/3"1"	2-39
359000-0102 ..	WIRE MARKING, YELLOW, PY01/3"2"	2-39
359000-0400 ..	WIRE MARKING, YELLOW, PA2/4"0"	1-355, 1-357
359000-0401 ..	WIRE MARKING, YELLOW, PA2/4"1"	1-355, 1-357
359000-0402 ..	WIRE MARKING, YELLOW, PA2/4"2"	1-355, 1-357
359000-0403 ..	WIRE MARKING, YELLOW, PA2/4"3"	1-355, 1-357
359000-0404 ..	WIRE MARKING, YELLOW, PA2/4"4"	1-355, 1-357
359000-0405 ..	WIRE MARKING, YELLOW, PA2/4"5"	1-355, 1-357
359000-0406 ..	WIRE MARKING, YELLOW, PA2/4"6"	1-355, 1-357
359000-0407 ..	WIRE MARKING, YELLOW, PA2/4"7"	1-355, 1-357
359000-0408 ..	WIRE MARKING, YELLOW, PA2/4"8"	1-355, 1-357
359000-0409 ..	WIRE MARKING, YELLOW, PA2/4"9"	1-355, 1-357
359000-0500 ..	WIRE MARKING, YELLOW, PA3/6"0"	2-257, 2-259
359000-0501 ..	WIRE MARKING, YELLOW, PA3/6"1"	2-257, 2-259
359000-0502 ..	WIRE MARKING, YELLOW, PA3/6"2"	2-257, 2-259
359000-0503 ..	WIRE MARKING, YELLOW, PA3/6"3"	2-257, 2-259
359000-0504 ..	WIRE MARKING, YELLOW, PA3/6"4"	2-257, 2-259
359000-0505 ..	WIRE MARKING, YELLOW, PA3/6"5"	2-257, 2-259
359000-0506 ..	WIRE MARKING, YELLOW, PA3/6"6"	2-257, 2-259
359000-0507 ..	WIRE MARKING, YELLOW, PA3/6"7"	2-257, 2-259
359000-0800 ..	WIRE MARKING, YELLOW, PA3/6"A"	2-257, 2-259
359000-0802 ..	WIRE MARKING, YELLOW, PA3/6"C"	2-257, 2-259
359000-0803 ..	WIRE MARKING, YELLOW, PA3/6"D"	2-257, 2-259
359000-0808 ..	WIRE MARKING, YELLOW, PA3/6"I"	2-257, 2-259
359000-0812 ..	WIRE MARKING, YELLOW, PA3/6"M"	2-257, 2-259
359000-0815 ..	WIRE MARKING, YELLOW, PA3/6"P"	2-257, 2-259
359000-0818 ..	WIRE MARKING, YELLOW, PA3/6"S"	2-257, 2-259
359000-0819 ..	WIRE MARKING, YELLOW, PA3/6"T"	2-257, 2-259
359000-0820 ..	WIRE MARKING, YELLOW, PA3/6"U"	2-257, 2-259
359005-0010 ..	MARKING LABEL KIT 0 - 9, 04.841.2150.0	2-55, 2-57, 2-117, 2-119, 2-189, 2-191, 7-17, 7-27, 7-31, 7-41, 7-43, 7-69, 8-199, 8-201
359005-0050 ..	MARKING LABEL KIT X, 04.841.4550.0	2-55, 2-57, 2-117, 2-119, 2-189, 2-191, 7-17, 7-27, 7-31, 7-41, 7-43, 7-69, 8-199, 8-201
359011-0807 ..	MARKING PLATES 5-FW 1-50	2-103, 9-29, 9-95, 9-133, 9-145, 9-147, 9-155
359011-0808 ..	MARKING PLATES 5-FW 51-100	9-95, 9-101, 9-133
359011-0809 ..	MARKING PLATES 5-FW 101-150	7-31, 7-69, 9-25, 9-101, 9-133
359011-0810 ..	MARKING PLATES 5-FW 151-200	2-195, 2-197, 9-101
359011-0811 ..	MARKING PLATES 5-FW 201-2	2-103, 9-101
359011-0817 ..	SYMBOL 5-GW (+) 50PC	2-53, 2-103, 2-195, 2-197
359011-0818 ..	SYMBOL 5-GW (-) 50PC	2-53, 2-103, 2-195, 2-197
359011-0819 ..	MARKING PLATES 5-GW (EARTH)	2-311, 2-321, 2-341, 5-333, 6-83, 9-123, 9-125, 9-145, 9-147, 11-87
359011-0821 ..	SET OF SIGNS 6-FW 1-50	1-329, 2-195, 2-197, 2-311, 2-321, 2-341, 5-333, 6-83, 8-227, 8-229, 9-123, 9-125, 9-133, 9-145, 9-147, 11-87
359011-0822 ..	SET OF SIGNS 6-FW 51-100	9-133, 9-145, 9-147
359011-0823 ..	SET OF SIGNS 6-FW 101-150	1-261, 1-329, 1-385, 1-395, 1-397, 2-53, 2-103, 2-195, 2-197, 2-199, 8-223, 8-225, 9-145, 9-147
359011-0824 ..	SET OF SIGNS 6-FW 151-200	1-385, 1-395, 2-103, 2-195, 2-197, 8-219, 8-221, 8-223, 8-225
359011-0825 ..	SET OF SIGNS 6-FW 201-250	1-395, 8-219, 8-221
359011-0832 ..	SET OF SIGNS 6-GW (+)	1-261, 1-329, 1-385, 1-395, 1-397, 8-219, 8-221, 8-223, 8-225
359011-0833 ..	SET OF SIGNS 6-GW (-)	1-261, 1-329, 1-385, 1-395, 1-397, 8-219, 8-221, 8-223, 8-225
359011-0834 ..	SET OF SIGNS 6-GW(EARTH)	1-261, 1-329, 1-385, 1-395, 1-397, 2-53, 2-103, 2-195, 2-197, 2-199, 8-219, 8-221, 8-223, 8-225, 8-227, 8-229, 9-29, 9-155
359240-0100 ..	SIGN HOLDER FOR 359240-0001	7-65, 7-67, 9-149, 9-151, 11-85
359241-0122 ..	SIGN: " CLEANING STEAM BARRIER SPACE"	9-149, 9-151
359241-0133 ..	SIGN: " SERVICE SWITCH"	9-149, 9-151
359241-0201 ..	SIGN: " HOUR METER"	9-149, 9-151
359241-0431 ..	SIGN: " MAIN SWITCH"	7-65, 7-67
359241-0482 ..	SIGN "PACKAGE COUNTER"	9-149, 9-151
359241-0484 ..	SIGN "FILLER/FILLER + PULLTAB"	11-85
359243-0917 ..	SIGN"400V, 50HZ, 100A"	7-65, 7-67
359243-0918 ..	SIGN"400V, 60HZ, 100A"	7-65, 7-67
359301-0001 ..	BUTTON SIGN, UP	2-339, 11-85

Part No	Description	Page No
359301-0005 ..	BUTTON SIGN, DOWN	2-339, 11-85
359301-0050 ..	BUTTON SIGN, DROP CHUTE BRIK	2-339
359301-0090 ..	BUTTON SIGN, INCHING	2-339
359301-0091 ..	BUTTON SIGN, INCHING FINAL FOLDER	2-339
359301-0100 ..	BUTTON SIGN, SPLICING	8-305
359301-0101 ..	BUTTON SIGN, STRIP SPLICING ON	8-287, 8-289
359301-0110 ..	BUTTON SIGN, SHORT STOP	1-387, 1-389, 2-339, 8-287, 8-289, 11-85
359301-0130 ..	BUTTON SIGN, LAMP TEST	2-339
359301-0131 ..	BUTTON SIGN, LAMP TEST / RESET	8-287, 8-289, 11-85
359301-0160 ..	BUTTON SIGN, DRAINAGE OF PRODUCT TUBE	2-339
359301-0170 ..	BUTTON SIGN, SPOOLING OF FINAL FOLDER	2-339
359301-0175 ..	BUTTON SIGN, PRODUCTION ON	11-85
359301-0488 ..	BUTTON SIGN, MATERIAL LOCKING	8-305
359301-0519 ..	SIGN "TPOP RESET"	2-339
359301-0536 ..	SIGN "MANUAL COMMANDS"	11-85
359605-0002 ..	MANDATORY SIGN ISO, EYE PROTECTION	2-37
359705-0003 ..	WARNING SIGN ISO, DANGEROUS CHEMICALS	2-37
359705-0004 ..	WARNING SIGN ISO, DANGEROUS CHEMICALS	1-321, 1-323, 2-17, 2-19, 2-37
359705-0005 ..	WARNING SIGN ISO, MOVING PART	8-111, 8-113, 8-129
359705-0007 ..	WARNING SIGN ISO, HOT SURFACE	1-7, 1-9, 1-139, 1-151, 1-153, 1-201, 1-237, 1-239, 1-255 1-315, 1-319, 8-133
359705-0015 ..	WARNING SIGN ISO, RISK OF ELECTRIC SHOCK	1-229, 1-259, 1-315, 1-327, 1-383, 1-387 1-389, 2-53, 2-103, 2-195, 2-197, 2-199, 2-307, 2-311, 2-317, 2-321, 2-339, 5-173, 5-175, 5-177 5-333, 6-43, 6-45, 6-83, 7-31, 7-65, 7-67, 7-69, 9-41, 9-43, 9-45, 9-59, 9-61, 9-63, 9-65, 9-67, 9-69 9-75, 9-123, 9-125, 9-135, 9-137, 11-85
359710-0001 ..	WARNING SIGN ISO, HOT SURFACE	5-173, 5-175, 5-177, 5-199, 5-201, 5-203, 5-205, 5-207 5-209, 6-43, 6-45
359715-0100 ..	WARNING SIGN ANSI (H), ELECTRIC SHOCK	7-65, 7-67
400828-0000 ..	SPRING	8-139
400833-0000 ..	PLUNGER	8-139
434665-0000 ..	HOOD	1-245, 1-247, 1-249, 1-251
436781-0000 ..	GASKET	1-319
440650-0000 ..	WASHER	1-273
440655-0000 ..	RING	1-269
440659-0000 ..	CYLINDRICAL PIN	1-273
440660-0000 ..	COMPRESSION SPRING	1-273
440661-0000 ..	COMPRESSION SPRING	1-273
440662-0000 ..	COMPRESSION SPRING	1-271
440663-0000 ..	COMPRESSION SPRING	1-269, 1-273
441706-0000 ..	WASHER	4-267, 4-269, 4-271, 4-279, 4-281, 4-283
441737-0000 ..	WASHER	1-7, 1-9, 1-139, 1-151, 1-153, 1-155, 1-157, 1-201
441739-0000 ..	WASHER	1-7, 1-9, 1-139, 1-151, 1-153, 1-201
441871-0000 ..	PENDULUM SUSPENSION	1-227, 1-231
442237-0000 ..	NUT	1-209, 1-211
445848-0000 ..	ELASTIC COUPLING	2-349, 2-351
449190-0000 ..	SHAFT	5-301, 5-303, 6-5, 6-7
449969-0100 ..	TOOL DISMOUNTING	11-5
449970-0000 ..	HOLDER	11-55
449971-0000 ..	SPINDLE	11-55
450457-0000 ..	FLANGE	2-63
450833-0000 ..	FILTER	1-263, 1-351
451430-0000 ..	CONNECTION HOUS.(MINOR)	1-229
456123-0000 ..	SUPPORT	1-229
464368-0000 ..	CRAMP	4-299
466042-0000 ..	SEAL	1-61, 1-63, 1-65, 1-67, 1-69, 1-117, 1-119
466046-0000 ..	ROLLER	1-61, 1-63, 1-65, 1-67, 1-69, 1-117, 1-119
466089-0000 ..	SEAL	1-117, 1-119
466092-0000 ..	ROLL	1-117, 1-119
476201-0000 ..	SLEEVE	8-63
476202-0000 ..	SCREW	8-63
479261-0000 ..	NIPPLE	1-235, 7-71, 7-73
479964-0000 ..	SIGN	2-161, 2-163, 2-165
484701-0000 ..	SHUTTER	5-259, 5-261, 5-263, 5-265, 5-267, 5-269
486826-0001 ..	SIGN "EMERGENCY STOP"	1-387, 1-389, 2-271, 8-291, 8-305, 9-69, 11-85
490998-0000 ..	THROTTLE SCREW	1-209, 1-211
491305-0000 ..	CONN.DIAGRAM AIR SUPERH.	1-229
493735-0000 ..	NIPPLE	11-57, 11-59
495118-0014 ..	DISTANCE PIPE L=14 MM	8-219, 8-221, 8-223, 8-225, 8-227, 8-229
495377-0000 ..	BUSH	9-149, 9-151
495495-0000 ..	COOLING ELEMENT SSR	9-121
497748-0000 ..	PIN	1-275, 1-277
499011-0000 ..	SHAFT	1-245, 1-247, 1-249, 1-251
499387-0000 ..	PRESSURE ROLLER - (10 PCS)	1-245, 1-247, 1-249, 1-251, 10-15, 10-17, 10-19, 10-21, 10-23 10-25
527898-0100 ..	MKS CONTAINER H2O2	2-15, 11-67
527912-0000 ..	NON-RETURN VALVE	2-25
529345-0100 ..	FILLING STATION H2O2	11-67
530551-0000 ..	WASHER	2-25
530587-0000 ..	WASHER	1-271
530588-0000 ..	SEAL RING	10-27
530589-0000 ..	SEAL RING	1-227, 1-231, 10-27
530590-0000 ..	VALVE CONE	1-227, 1-231
530591-0000 ..	HOLDER	1-273
530595-0000 ..	SEAL RING HOLDER	1-269

Part No	Description	Page No
530597-0000 ..	WASHER	1-273
530598-0000 ..	WASHER	1-273
530599-0000 ..	RING	1-227, 1-231, 1-273
530775-0000 ..	END PIECE	8-87, 8-89
531345-0200 ..	PERSONAL PROTECT. EQ H2O2	10-3
531616-0000 ..	HOLDER	2-293, 2-323
531731-0000 ..	GASKET	1-229
532117-0000 ..	CLAMP RING	1-275
532118-0000 ..	CLAMP RING	1-277
532208-0000 ..	SHAFT	11-73
532209-0000 ..	SHEET	11-73
532210-0100 ..	PEROXIDE CONTAINER TROLLEY	11-67
532211-0000 ..	DOWEL	11-73
532349-0000 ..	PLAIN BEARING	1-227, 1-231
532413-0000 ..	REDUCING NIPPLE	2-251, 2-253, 2-293, 6-73
532655-0000 ..	CAUTION SIGN	2-33, 11-69
532676-0000 ..	SHEET	11-57, 11-59
532677-0000 ..	PIPE	11-57, 11-59
532678-0000 ..	DOWEL	11-57, 11-59
532679-0000 ..	PLATE	11-57, 11-59
533014-0100 ..	LEAK FINDING EQUIPMENT (SUPERSTRUCTURE)	11-5
533015-0000 ..	WIRING DIAGRAM	11-57, 11-59
533169-0000 ..	DIAPHRAGM	1-269, 10-27
533374-0000 ..	FITMENT BOTTOM	11-61
533905-0100 ..	PONCH	11-57, 11-59
533906-0000 ..	FITMENT COVER	11-61
534310-0001 ..	NOZZLE	2-293, 6-73
534634-0000 ..	PIPE	11-71
534635-0000 ..	VALVE	11-71
534636-0000 ..	LEVEL GLAS	11-71
534637-0000 ..	ATTACHMENT	11-71
534691-0000 ..	DIAPHRAGM	11-71
534692-0000 ..	FRAME SECTION	11-71
534693-0000 ..	PLATE	11-71
534694-0000 ..	SUCTIONPIPE	11-71
534695-0000 ..	WEIGHT	11-71
534696-0000 ..	VALVE	11-71
534697-0000 ..	VALVE HOUSING	11-71
534698-0000 ..	NIPPLE	11-71
536704-0000 ..	WASHER	4-263, 4-265, 4-267, 4-269, 4-271, 4-275, 4-277, 4-279, 4-281, 4-283
536916-0000 ..	AXLE PIN	8-135
539212-0000 ..	GASKET	1-267, 10-27
540718-0000 ..	ELBOW PIPE JOINT	2-85
541163-0200 ..	CLAMP RING	1-267
541164-0200 ..	CLAMP RING	1-267
541165-0000 ..	WASHER	1-275, 1-277, 6-25, 6-27
541166-0000 ..	WASHER	1-269
542038-0002 ..	COMPONENTS WITHOUT TP-NO	9-163
543371-0000 ..	CIRCUIT BOARD 8TE	9-167
543921-0005 ..	COMPONENTS WITHOUT TP-NO	9-165
544725-0000 ..	AXLE PIN	8-135
546929-0000 ..	FILTER	1-225, 1-235
549267-0000 ..	LID	1-351
551927-0001 ..	COMPONENTS WITHOUNT TP-NO	9-167
551928-0000 ..	TERMINAL LABELS 8TE	9-167
553607-0000 ..	SLEEVE	1-269, 1-271, 1-273
554141-0000 ..	FILTER	1-263, 1-351
554142-0000 ..	FILTER HOUSING	1-263, 1-351
554162-0000 ..	SCREW	1-275, 1-277
554585-0000 ..	STUD SCREW	1-351
555458-0000 ..	SEALING WASHER	1-273
556133-0000 ..	SEALING WASHER	1-271
559810-0101 ..	TMCC2 CONTROLLER	9-21, 9-23, 9-157, 9-161
560122-0000 ..	SUPPORT ROLLER	4-243, 4-245
560931-0000 ..	BRACKET	1-225
561427-0000 ..	CONTAINER	2-33, 11-69
563285-0000 ..	BLIND PLUG	2-25
565250-0000 ..	WASHER	2-33, 11-69
565251-0000 ..	VALVE	2-33, 11-69
566171-0000 ..	CUP SPRING	2-29
566194-0000 ..	WEIGHT	2-29
566195-0000 ..	LID	2-29
566196-0100 ..	LID WITH WEIGHT	2-27
567018-0000 ..	STEAM HOUSE	1-267
567070-0012 ..	ELECTRODE	1-321, 1-323
567372-0000 ..	INSTRUCTION FOR USE	11-51
567743-0000 ..	SEAL	1-61, 1-63, 1-65, 1-67, 1-69, 1-117, 1-119
567746-0001 ..	ROLLER (STANDARD SIZE)	1-31, 1-33, 1-75, 1-77, 1-79
569058-0000 ..	SUPPORT ROLLER	4-243, 4-245
573504-0000 ..	ROLLER	1-61, 1-63, 1-65, 1-67, 1-69, 1-117, 1-119
574455-0000 ..	TEMPLATE	11-27
575034-0000 ..	ROUND NUT	1-7, 1-9, 1-139, 1-151, 1-153, 1-201
576436-0100 ..	A-CYLINDER	1-267
576437-0100 ..	C-CYLINDER	1-267

Part No	Description	Page No
576438-0100 ..	B-CYLINDER	1-267
576439-0000 ..	CYLINDER HOUSING	1-269, 1-273
576440-0000 ..	END SECTION	1-269, 1-273
576441-0000 ..	PISTON	1-269, 1-273
576442-0000 ..	PISTON ROD	1-273
576443-0000 ..	CYLINDER HOUSING	1-271
576444-0000 ..	END SECTION	1-271
576445-0000 ..	PISTON	1-271
576446-0000 ..	PISTON ROD	1-269
576447-0000 ..	PISTON ROD	1-271
576448-0000 ..	SPACER	1-269
576449-0000 ..	SPACER	1-269
576450-0000 ..	SPACER	1-273
576451-0000 ..	SPACER	1-271
578640-0000 ..	CLAMPING RING	1-337
578684-0000 ..	SPRING BRACKET	8-157, 8-159
579318-0000 ..	SEAL	1-117, 1-119
582526-0100 ..	CARRIAGE	11-77
582527-0000 ..	ROD	11-79
583727-0000 ..	SHAFT	8-75, 8-155
591341-0000 ..	PIN	2-9
593682-0000 ..	MACHINE SIGN, EEA(CE-MARK)	10-3
596678-0000 ..	KNIFE	8-179, 8-181, 8-189, 8-191
598101-0000 ..	BEARING HOUSING	5-169, 5-171
598549-0000 ..	SCREW	5-211
598713-0000 ..	PLATFORM	2-215, 2-217
599556-0000 ..	WINDOW	8-285
735041-0000 ..	CONNECTION CLAMP	1-383
751009-0000 ..	INSULATION	1-229
751395-0000 ..	FLANGE	2-31
751485-0000 ..	SCREW	1-337
751491-0000 ..	ROLL	1-105, 1-107, 1-109
751492-0000 ..	ROLL	1-105, 1-107, 1-109
751502-0000 ..	ROLLER	1-75, 1-77, 1-79
752126-0000 ..	FORMING ROLLER	1-105, 1-107, 1-109
752127-0000 ..	FORMING ROLLER	1-105, 1-107, 1-109
752128-0000 ..	FORMING ROLLER	1-105, 1-107, 1-109
752156-0000 ..	FLANGE BUSHING	1-87, 1-89, 1-91, 1-93, 1-105, 1-107, 1-109
752186-0001 ..	SHAFT	1-105, 1-107, 1-109
752186-0002 ..	SHAFT	1-105, 1-107, 1-109
752186-0004 ..	SHAFT	1-75, 1-77, 1-79, 1-105, 1-107, 1-109
752186-0005 ..	SHAFT	1-31, 1-33, 1-47, 1-49, 1-75, 1-77, 1-79, 1-105, 1-107, 1-109
752186-0006 ..	SHAFT	1-31, 1-33, 1-39, 1-41, 1-87, 1-89, 1-91, 1-93, 1-105, 1-107, 1-109
752186-0007 ..	SHAFT	1-39, 1-41, 1-87, 1-89, 1-91, 1-93
752186-0008 ..	SHAFT	1-105, 1-107, 1-109
752186-0009 ..	SHAFT	1-105, 1-107, 1-109
752186-0012 ..	SHAFT	1-105, 1-107, 1-109
752186-0013 ..	SHAFT	1-105, 1-107, 1-109
752186-0014 ..	SHAFT	1-31, 1-33, 1-47, 1-49, 1-75, 1-77, 1-79
752186-0015 ..	SHAFT	1-39, 1-41, 1-75, 1-77, 1-79, 1-87, 1-89, 1-91, 1-93
752186-0016 ..	SHAFT	1-31, 1-33, 1-75, 1-77, 1-79, 1-125, 1-127
752186-0019 ..	SHAFT	1-47, 1-49, 1-105, 1-107, 1-109
752186-0022 ..	SHAFT	1-47, 1-49
752288-0000 ..	SLEEVE	4-173
777200-0101 ..	PIPE WRENCH	11-5
905373-0000 ..	SCREW - LEG	8-45, 8-51, 8-53, 11-7, 11-9
906254-0000 ..	ROLLER	8-157, 8-159
907587-0000 ..	LABEL	11-85
925998-0000 ..	DIAPHRAGM	1-287, 10-9
926907-0000 ..	SCREW	1-287
926934-0000 ..	SUPPORT	1-287
927044-0000 ..	SPACER	1-287
927203-0000 ..	COVER	1-287
927244-0100 ..	PUMP	2-37
927262-0000 ..	PIPE	2-37
927339-0000 ..	ADAPTER	2-39
927340-0000 ..	DISC	2-39
927341-0000 ..	HOLDER	2-39
927342-0000 ..	CYLINDER	2-39
927354-0000 ..	SCREW	1-289, 1-419
927362-0000 ..	MAGNET	2-39
927363-0000 ..	PLUG	2-39
927420-0001 ..	O-RING 5.1X1.6 SILICONE	1-263, 1-351
927421-0002 ..	O-RING 12.3X2.4 SILICONE	1-351
927421-0003 ..	O-RING 13.3X2.4 SILICONE	1-263, 1-319
927421-0004 ..	O-RING 15.3X2.4 SILICONE	1-263, 1-321, 1-323, 1-351
927421-0005 ..	O-RING 7.3X2.4 SILICONE	11-71
927422-0001 ..	O-RING 19.2X3 SILICONE	1-263, 1-351, 11-71
927422-0003 ..	O.RING 24.2X3 SILICONE	2-33, 11-69
927422-0005 ..	O-RING 36.2X3 SILICONE	2-31
927422-0006 ..	O-RING 42.2X3 SILICONE	1-263, 2-31
927422-0007 ..	O-RING 44.2X3 SILICONE	1-263, 1-351
927422-0009 ..	O-RING 54.5X3 SILICONE	1-351
927422-0016 ..	O-RING 79.5X3 SILICONE	2-17, 2-19

Part No	Description	Page No
927454-0000 ..	GASKET	1-229
927859-0000 ..	TOOTHED PULLEY	5-313, 5-315
928025-0000 ..	PLUG	2-37
929355-0000 ..	ROLLER TPA 330	4-243, 4-245
929372-0000 ..	PISTON	4-127
950351-0000 ..	SHAFT	4-127
970215-0000 ..	STOP BLOCK	9-149, 9-151
970261-0000 ..	SPACER SCREW 10,2X10MM	8-285
970262-0000 ..	SPACER NUT	8-285
971286-0000 ..	SPACER H=6MM	8-285
971346-0000 ..	GUIDE PIN	9-149, 9-151
975917-0000 ..	KEY FOR SAFETY SWITCH 90044-103	8-293
977527-0000 ..	BRACKET	7-19
978603-0000 ..	SIGN	2-47
978757-0000 ..	ROLLER 180-284ML	4-243, 4-245
978760-0000 ..	ROLLER TBA200SL	4-243, 4-245
979434-0000 ..	FERRULE	1-287
979500-0003 ..	ELECTRODE	1-225
979548-0000 ..	MACHINE PLATE	1-341
979813-0000 ..	PLUG	10-15, 10-17, 10-19, 10-21, 10-23, 10-25
979847-0000 ..	SHAFT COUPLING	8-247
979931-0000 ..	VOLUME BULGE	4-51, 4-53, 4-55, 4-57, 4-59, 4-65, 4-67, 4-69, 4-71, 4-73
979951-0000 ..	FLANGE	11-51
985328-0000 ..	CONNECTION	2-213, 2-215, 2-217, 2-221, 2-223, 2-231, 2-233
985756-0000 ..	KEY	8-111, 8-113
988666-0000 ..	GASKET	9-43, 9-45, 9-63, 9-65, 9-67, 9-69
988685-0000 ..	PIN	1-367, 1-375, 1-419, 1-421, 2-47, 2-161, 2-163, 2-165, 2-267, 2-269, 2-273, 2-285, 2-287 2-303, 2-307, 2-313, 2-315, 2-317, 2-329, 2-331, 7-57, 7-61, 7-65, 7-67, 8-293, 8-295, 8-303, 8-307 9-43, 9-45, 9-63, 9-65, 9-67, 9-69
988690-0000 ..	RIM	8-295
1010822-0000 .	RAILING	2-215, 2-217, 2-221, 2-223, 2-231, 2-233
1020142-0002 .	RAIL HOLDER, B55 WIDTH 30 MM	5-259, 5-261, 5-263, 5-265, 5-267, 5-269
1020146-0000 .	LOCKING BLOCK	5-259, 5-261, 5-263, 5-265, 5-267, 5-269
1020637-0000 .	HOLDER	2-243, 2-245, 2-247, 5-297, 5-299, 5-331, 6-61, 6-63, 6-81
1020638-0000 .	HOLDER	5-331, 6-81
1035362-0100 .	MEASURING DEVICE	11-5
1035654-0000 .	CONNECTION	1-337
1035788-0000 .	SHAFT	4-263, 4-265, 4-267, 4-269, 4-271, 4-275, 4-277, 4-279, 4-281, 4-283
1035792-0000 .	E-HINGE	1-367, 1-375, 1-419, 1-421, 2-47, 2-161, 2-163, 2-165, 2-267, 2-269, 2-273, 2-285 2-287, 2-303, 2-307, 2-313, 2-315, 2-317, 2-329, 2-331, 7-57, 7-61, 7-65, 7-67, 8-293, 8-295, 8-303 8-307, 9-43, 9-45, 9-63, 9-65, 9-67, 9-69
1035794-0000 .	BLOCKING PIECE	7-57, 7-61, 7-65, 7-67
1035828-0000 .	VOLUME BULGE	4-7, 4-9, 4-11, 4-17, 4-19, 4-21
1035831-0000 .	VOLUME SHIM	4-7, 4-9, 4-11, 4-17, 4-19, 4-21, 10-15, 10-17, 10-19, 10-21, 10-23, 10-25
1035871-0000 .	SCREW	4-155, 4-157, 4-159, 4-161
1035877-0000 .	ARM LEFT	4-263, 4-265
1035878-0000 .	ARM RIGHT	4-275, 4-277
1035882-0000 .	BENDING ROLLER	8-61
1035895-0000 .	SHAFT	8-25
1036155-0000 .	TOOTH PART	4-267, 4-269, 4-271, 4-279, 4-281, 4-283
1036156-0000 .	TOOTH PART	4-263, 4-265, 4-275, 4-277
1036187-0000 .	T-PIPE	1-227, 1-231
1036188-0000 .	SHAFT	1-227, 1-231
1036189-0000 .	SPINDEL GUIDE	1-227, 1-231
1036191-0000 .	SEAL HOLDER	1-227, 1-231
1036192-0000 .	SPACER ROD	1-227, 1-231
1036193-0000 .	CYLINDER BRACKET	1-231
1036241-0000 .	WASHER	2-229
1036278-0000 .	SLEEVE	4-173
1036293-0000 .	HOLDER	1-15, 1-17, 1-221, 1-231
1036294-0000 .	GASKET	1-221
1036304-0001 .	LOCKING ARM	7-61
1036304-0014 .	LOCKING ARM	7-61
1036314-0000 .	BOTTOM PANEL	1-207
1036318-0000 .	PIPE	1-207
1036319-0000 .	BRACKET	1-207
1036343-0000 .	SCREW	4-115, 4-117, 4-119, 4-121, 4-175, 4-177, 4-179, 4-181
1036372-0000 .	PIPE	1-229
1036373-0000 .	HOLDER	1-229
1036389-0000 .	LID	4-199, 4-201
1036475-0000 .	PIN	1-161, 1-163
1036483-0000 .	SEAL	4-263, 4-265, 4-275, 4-277
1036484-0000 .	GASKET	4-263, 4-265, 4-275, 4-277
1036485-0000 .	COVERING PLATE	4-263, 4-265, 4-275, 4-277
1036494-0000 .	GUIDE BUSHING	4-155, 4-157, 4-159, 4-161
1036495-0000 .	BUSHING	4-143, 4-145, 4-199, 4-201
1036501-0000 .	SPACER	4-263, 4-265, 4-275, 4-277
1036563-0000 .	WASHER	8-293, 8-303, 8-307
1036584-0000 .	WASHER	4-129, 4-131, 4-133, 4-187, 4-189, 4-191, 10-9
1036585-0000 .	EAR	4-143, 4-145, 4-199, 4-201
1036610-0000 .	BRACKET	1-223, 1-257, 1-345, 1-347
1036615-0000 .	SHAFT	4-267, 4-269, 4-271, 4-279, 4-281, 4-283
1036616-0000 .	WASHER	4-267, 4-269, 4-271, 4-279, 4-281, 4-283
1036617-0000 .	BRACKET	4-267, 4-269, 4-271, 4-279, 4-281, 4-283, 10-53

Part No	Description	Page No
1036618-0000	.ROLL	4-267, 4-269, 4-271, 4-279, 4-281, 4-283
1036620-0000	.SHAFT	4-267, 4-269, 4-271, 4-279, 4-281, 4-283
1036622-0000	.GUIDE ROLLER	8-75, 8-155
1036623-0000	.GUIDE ROLLER	1-343, 8-75, 8-155
1036664-0000	.LID	4-143, 4-145
1036673-0000	.WASHER	2-109, 2-111, 2-113, 2-115, 4-249, 4-251, 4-253
1036674-0000	.FASTENING PLATE	4-249, 4-251, 4-253
1036794-0000	.PIPE	7-39
1036811-0000	.CLAMP	1-225, 1-235
1036826-0000	.PIPE	7-37
1036827-0000	.PIPE	7-37, 7-45
1036828-0000	.TANK	7-41, 7-43
1036911-0000	.CONTAINER	1-235
1036939-0000	.SIDE PIECE	1-339
1036940-0000	.SIDE PIECE	1-339
1036954-0000	.AXLE SUPPORT	1-61, 1-63, 1-65, 1-67, 1-69, 1-117, 1-119
1036955-0000	.AXLE SUPPORT	1-61, 1-63, 1-65, 1-67, 1-69, 1-117, 1-119
1036963-0000	.HOOK HOLDER	1-339
1036965-0000	.HOOK HOLDER	1-339
1037012-0000	.AXLE PIN	2-11
1037041-0000	.HOLDER	1-235
1037044-0000	.RAILING	1-337
1037069-0000	.SCREW	4-263, 4-265, 4-275, 4-277
1037089-0000	.SPACER	1-201
1037093-0000	.SENSOR BRACKET	1-265
1037102-0000	.SPACER PIPE	2-17, 2-19
1037104-0000	.LOCATING PIECE	4-261, 4-273
1037106-0000	.SLEEVE	4-261, 4-273
1037120-0000	.SHAFT	8-139
1037121-0000	.SHAFT	8-139
1037124-0000	.HOLDER	8-139
1037129-0000	.LID	1-209, 1-211, 7-47
1037130-0000	.CONNECTION BOX	2-271, 8-291
1037184-0000	.SPACER SCREW	7-11
1037254-0000	.SHIM	4-267, 4-269, 4-271, 4-279, 4-281, 4-283, 10-15, 10-17, 10-19, 10-21, 10-23, 10-25
1037267-0000	.PIPE	1-209, 1-211
1037268-0000	.LID	1-209, 1-211
1037391-0000	.CANTILEVER	2-235
1037443-0000	.GASKET	2-69, 2-71, 2-145, 2-147
1037539-0000	.BRACKET	2-25
1037552-0000	.SPACER	1-415
1037562-0000	.SHAFT	2-349, 2-351
1037571-0000	.GUIDE BUSHING	2-213, 2-221, 2-223
1037572-0000	.COVER PLATE	9-71, 9-73
1037573-0000	.GASKET	9-71, 9-73
1037574-0000	.COVER PLATE	9-19, 9-71, 9-73
1037575-0000	.GASKET	9-19, 9-71, 9-73
1037583-0000	.HOLDER	7-71, 7-73
1037696-0000	.CLAMPING PIECE	11-35
1037697-0000	.CLAMPING PIECE	11-35
1037733-0000	.VOLUME BULGE	4-7, 4-9, 4-11, 4-17, 4-19, 4-21
1037734-0000	.WEDGE	4-7, 4-9, 4-11, 4-17, 4-19, 4-21, 4-51, 4-53, 4-55, 4-57, 4-59, 4-65, 4-67, 4-69, 4-71, 4-73, 4-81
1037735-0000	.VOLUME SHIM	4-7, 4-9, 4-11, 4-17, 4-19, 4-21, 10-15, 10-17, 10-19, 10-21, 10-23, 10-25
1037853-0000	.SHAFT	4-263, 4-265, 4-267, 4-269, 4-271, 4-275, 4-277, 4-279, 4-281, 4-283
1037885-0000	.REAMED BOLT	1-61, 1-63, 1-65, 1-67, 1-69, 1-117, 1-119
1038021-0000	.WASHER	4-285
1038240-0000	.SPACER	4-127
1038275-0012	.SPACER	9-135, 9-137
1038355-0000	.FRAME	9-149, 9-151
1038408-0000	.COVERING PLATE	9-49, 9-51
1038464-0000	.SPROCKET	1-165, 1-167, 1-169
1038509-0000	.WASHER	4-261, 4-273
1038634-0000	.DRAINING	1-225
1038637-0000	.WEDGE	4-7, 4-9, 4-11, 4-17, 4-19, 4-21
1038638-0000	.VOLUME BULGE	4-7, 4-9, 4-11, 4-17, 4-19, 4-21
1038639-0000	.VOLUME SHIM	4-7, 4-9, 4-11, 4-17, 4-19, 4-21
1038688-0000	.HOLDER	1-319
1038699-0000	.BRACKET	9-69
1038828-0000	.PIPE	4-299
1038829-0000	.PIPE	4-299
1038865-0000	.SPACER DISC	8-111, 8-113
1038866-0000	.INTERMEDIARY SECTION	1-225
1038867-0000	.BOW CLAMP	4-267, 4-269, 4-271, 4-279, 4-281, 4-283
1040754-0000	.VOLUME BULGE	4-7, 4-9, 4-11, 4-17, 4-19, 4-21
1040755-0000	.VOLUME SHIM	4-7, 4-9, 4-11, 4-17, 4-19, 4-21, 10-15, 10-17, 10-19, 10-21, 10-23, 10-25
1040756-0000	.WEDGE	4-7, 4-9, 4-11, 4-17, 4-19, 4-21, 4-51, 4-53, 4-55, 4-57, 4-59, 4-65, 4-67, 4-69, 4-71, 4-73
1040796-0000	.PIPE	2-31
1040807-0000	.LID	2-27
1040808-0000	.GASKET	2-27
1040840-0000	.FLANGE	2-17, 2-19
1040841-0000	.FLANGE	2-17, 2-19
1040852-0000	.SEALING RING	2-17, 2-19
1040853-0000	.SEALING RING	2-17, 2-19

Part No	Description	Page No
1040876-0000	.COVER	1-207
1040877-0000	.PLATE	1-207
1040878-0000	.PLATE	1-207
1040970-0000	.BRACKET	1-315, 1-351
1040991-0000	.ANGLE	2-315
1040992-0000	.SPACER NUT	2-315
1041046-0000	.FLOW METER	7-19
1041603-0000	.BRACKET	2-11
1041609-0000	.NUT	2-339
1041921-0000	.HOLDER	7-79
1041925-0000	.PIPE	7-35
1041926-0000	.PIPE	7-35
1041930-0000	.PIPE	7-25
1041931-0000	.PIPE	7-25
1041932-0000	.PIPE	7-71, 7-73
1041933-0000	.PIPE	7-71, 7-73
1041934-0000	.PIPE	7-45
1041937-0000	.SIGN	1-367
1041938-0000	.SIGN	7-77
1041943-0000	.CONNECTION BOX	7-31
1041946-0000	.PIPE	7-41, 7-43
1041963-0000	.WASTE BOX	7-49
1041967-0000	.COVERING PANEL	7-55
1041970-0000	.DOOR	7-61
1041978-0000	.HINGE FLANGE	1-7, 1-9, 1-139, 1-201
1041979-0000	.HINGE FLANGE	1-7, 1-9, 1-139, 1-201
1041984-0000	.ATTACHMENT PIPE	7-19
1041988-0000	.CLAMP	1-279, 1-281, 1-285
1086870-0000	.SIGN	5-253, 5-255, 6-65, 10-7
1086888-0000	.COVER	5-331, 6-81
1086889-0000	.COVER	5-297, 5-299, 5-331, 6-61, 6-63, 6-81
1095597-0100	.TERMINAL	2-339
1095607-0200	.COVERING PANEL	7-3, 7-5
1095608-0100	.WATER PANEL	7-3, 7-5
1095609-0200	.PNEUMATIC UNIT	7-75
1095610-0300	.MAIN SWITCH	7-3, 7-5
1095611-0300	.VALVE PANEL	7-75
1095612-0300	.COOLING WATER SYSTEM	7-3, 7-5
1095627-0300	.FOAM CLEANING UNIT	7-3, 7-5
1095630-0200	.CONNECTION BOX	7-3, 7-5
1095672-0100	.PIPE	7-33
1095673-0100	.SIDE	7-33
1095675-0100	.PIPE	7-33
1095676-0100	.PUMP	7-33
1095677-0100	.BRANCHING PIPE	7-33
1095678-0300	.BALL VALVE	7-33
1095681-0100	.SPRAY GUN	2-237
1095682-0100	.AIR JET GUN	2-149, 2-151
1095706-0300	.COOLING WATER PUMP	7-13, 7-15
1095709-0200	.CONNECTION BOX	7-13, 7-15
1095710-0300	.COMPRESSOR UNIT	7-13, 7-15
1095714-0300	.SUPPLY SYSTEM	7-3, 7-5
1095715-0100	.ICE WATER	7-23
1095716-0100	.PIPE WORK-AIR	7-75
1095738-0300	.PROTECTIVE COVER	2-289
1095862-0100	.LADDER	1-331
1095863-0200	.PIVOT ARM	2-131
1095883-0200	.GABLE PLATE	7-51
1095884-0100	.ASSEMBLY TOOL	11-5
1095886-0200	.COVERING PANEL	7-51
1095888-0200	.HATCH	7-51
1095889-0100	.DOOR	7-51
1095890-0200	.HATCH	7-51
1095891-0200	.DOOR	7-51
1103298-0000	.NON-SKID	2-63
1103300-0000	.NON-SKID	2-63, 2-133, 2-135, 2-137
1110083-0002	.DOLLY	4-155, 4-157, 4-159, 4-161, 10-15, 10-17, 10-19, 10-21, 10-23, 10-25
1110930-0000	.INDUCTOR	4-129, 4-131, 4-133, 4-187, 4-189, 4-191, 10-15, 10-17, 10-19, 10-21, 10-23, 10-25
1110931-0000	.INDUCTOR	4-129, 4-131, 4-133, 4-187, 4-189, 4-191, 10-15, 10-17, 10-19, 10-21, 10-23, 10-25
1110932-0000	.INDUCTOR	4-129, 4-131, 4-133, 4-187, 4-189, 4-191, 10-15, 10-17, 10-19, 10-21, 10-23, 10-25
1110934-0000	.INDUCTOR	4-129, 4-131, 4-133, 4-187, 4-189, 4-191, 10-15, 10-17, 10-19, 10-21, 10-23, 10-25
1110936-0000	.INDUCTOR	4-129, 4-131, 4-133, 4-187, 4-189, 4-191, 10-15, 10-17, 10-19, 10-21, 10-23, 10-25
1110937-0000	.INDUCTOR	4-129, 4-131, 4-133, 4-187, 4-189, 4-191, 10-15, 10-17, 10-19, 10-21, 10-23, 10-25
1110938-0000	.INDUCTOR	4-129, 4-131, 4-133, 4-187, 4-189, 4-191, 10-15, 10-17, 10-19, 10-21, 10-23, 10-25
1129066-0000	.RETURN PIPE	7-27
1129079-0000	.FLOW METER	7-19
1129141-0000	.MACHINE BODY	7-13, 7-15
1129182-0000	.BRACKET	7-69
1129202-0000	.CONNECTION BOX	7-69
1129209-0000	.MOUNTING RAIL	7-69
1129210-0000	.MOUNTING RAIL	7-31
1129253-0000	.FASTENING PLATE	2-349, 2-351
1129274-0000	.GUIDE LUG	2-267, 2-269, 2-287, 2-307, 2-313, 2-317, 2-325, 2-329, 2-331, 2-333, 7-57, 7-61
1129275-0000	.BOX FOR DIAGRAM	2-325

Part No	Description	Page No
1129276-0000	.GASKET	9-71, 9-73
1129318-0000	.BRACKET	9-49, 9-51
1129324-0000	.WASHER	2-265, 2-281, 2-283, 2-303
1129325-0000	.SEALING FLANGE	2-265, 2-281, 2-283, 2-303
1129328-0000	.ATTACHMENT	2-25
1129342-0000	.PROTECTION	9-121
1129370-0000	.SIGN	2-161, 2-163, 2-165
1129372-0000	.LID	1-399, 1-401
1129387-0000	.CONNECTION TABLE	7-49
1129402-0000	.SPACER SCREW	7-11
1129431-0000	.WASHER	1-61, 1-63, 1-65, 1-67, 1-69, 1-117, 1-119
1129432-0000	.LID	2-35
1129480-0000	.CABLE DUCT	1-387, 1-389
1129504-0000	.MOUNTING RAIL	2-195, 2-197
1129549-0000	.SHEET	9-71, 9-73
1129550-0000	.GASKET	9-71, 9-73
1129599-0000	.CRAMP	4-299
1129600-0000	.BRAID	2-185, 2-187, 2-189, 2-191
1129643-0000	.STAIR	1-339
1129644-0000	.BRACKET	1-339
1129741-0000	.RAILING	1-337
1129767-0000	.SCREW	2-265, 2-267, 2-269, 2-273, 2-285, 2-287, 2-303, 2-307, 2-313, 2-315, 2-317, 2-325, 2-329, 2-331, 2-333, 8-293, 8-295, 8-303, 8-307
1129770-0000	.BLOCKING PIECE	1-367, 1-375, 1-419, 1-421, 2-47, 2-161, 2-163, 2-165, 2-265, 2-267, 2-269, 2-273, 2-285, 2-287, 2-303, 2-307, 2-313, 2-315, 2-317, 2-325, 2-329, 2-331, 2-333, 8-293, 8-295, 8-303, 8-307, 9-43, 9-45, 9-63, 9-65, 9-67, 9-69
1129839-0000	.COOLING PLATE	8-17
1129869-0000	.COOLING PLATE	8-17
1140039-0000	.CONVEYOR FRAME	11-79
1140040-0000	.BRACKET	11-79
1140082-0000	.LOCK SHAFT	5-321
1140129-0000	.HOLDER	2-97
1140268-0000	.TEMPLATE	11-27
1140283-0000	.TEMPLATE	11-27
1140320-0000	.TEMPLATE	11-27
1140480-0000	.CLAMP	1-279, 1-281, 1-285
1140603-0000	.COMPRESSOR UNIT	7-17
1140642-0000	.PIPE	7-41, 7-43
1140670-0000	.BRACKET	7-41, 7-43
1140685-0000	.BEAM	1-423
1140769-0000	.DOOR STOPPER	9-49, 9-51
1140840-0000	.WHEEL	11-79
1143215-0000	.SPRING	4-27, 4-29, 4-39, 4-41, 4-51, 4-53, 4-55, 4-57, 4-59, 4-65, 4-67, 4-69, 4-71, 4-73
1143216-0000	.SPRING	4-27, 4-29, 4-39, 4-41, 4-51, 4-53, 4-55, 4-57, 4-59, 4-65, 4-67, 4-69, 4-71, 4-73
1143530-0000	.SPRING	5-231, 5-233, 5-235, 5-237, 5-239, 5-241
1144264-0000	.HUB	5-29, 5-31, 5-77, 5-79
1144312-0000	.AXLE PIN	5-29, 5-31, 5-77, 5-79
1144324-0300	.FRAMEWORK	5-3
1144329-0300	.PULL-DOWN DEVICE	5-3
1144331-0300	.PRESSURE DEVICE	5-3
1144335-0000	.ROLLER	5-29, 5-31, 5-77, 5-79
1144354-0000	.WASHER	5-29, 5-31, 5-77, 5-79
1144356-0000	.COVER	5-29, 5-31, 5-77, 5-79
1144417-0000	.BUSHING	5-29, 5-31, 5-77, 5-79
1144470-0000	.SHAFT	5-307, 5-313, 5-315
1144472-0000	.LEVER	5-5, 5-7
1144473-0000	.LEVER	5-5, 5-7
1144475-0000	.BRACKET	5-5, 5-7
1144476-0000	.BRACKET	5-5, 5-7
1144482-0000	.SUPPORT	5-231, 5-233, 5-235, 5-237, 5-239, 5-241
1144483-0000	.PLATE	5-231, 5-233, 5-235, 5-237, 5-239, 5-241
1144485-0000	.SUPPORT	5-231, 5-233, 5-235, 5-237, 5-239, 5-241
1144486-0000	.CAM	5-231, 5-233, 5-235, 5-237, 5-239, 5-241
1144488-0000	.COLUMN	5-231, 5-233, 5-235, 5-237, 5-239, 5-241
1144489-0000	.FLANGE	5-231, 5-233, 5-235, 5-237, 5-239, 5-241
1144492-0000	.SPRING	5-231, 5-233, 5-235, 5-237, 5-239, 5-241
1144493-0000	.WASHER	5-231, 5-233, 5-235, 5-237, 5-239, 5-241
1144494-0000	.AXLE PIN	5-231, 5-233, 5-235, 5-237, 5-239, 5-241
1144495-0000	.ECCENTRIC	5-231, 5-233, 5-235, 5-237, 5-239, 5-241
1144496-0000	.ECCENTRIC	5-231, 5-233, 5-235, 5-237, 5-239, 5-241
1144498-0000	.FLANGE	5-231, 5-233, 5-235, 5-237, 5-239, 5-241
1144500-0000	.SUPPORT	5-231, 5-233, 5-235, 5-237, 5-239, 5-241
1144501-0000	.SPACER	5-231, 5-233, 5-235, 5-237, 5-239, 5-241
1144502-0000	.WASHER	5-231, 5-233, 5-235, 5-237, 5-239, 5-241
1144503-0000	.FLANGE	5-231, 5-233, 5-235, 5-237, 5-239, 5-241
1144505-0000	.COLUMN	5-231, 5-233, 5-235, 5-237, 5-239, 5-241
1144506-0000	.LEVER	5-231, 5-233, 5-235, 5-237, 5-239, 5-241
1144508-0000	.AXLE PIN	5-231, 5-233, 5-235, 5-237, 5-239, 5-241
1144511-0000	.SHIM	5-231, 5-233, 5-235, 5-237, 5-239, 5-241
1144514-0000	.BUSHING	5-231, 5-233, 5-235, 5-237, 5-239, 5-241
1144515-0000	.INSERT	5-231, 5-233, 5-235, 5-237, 5-239, 5-241
1144517-0000	.BUSHING	5-231, 5-233, 5-235, 5-237, 5-239, 5-241
1144521-0000	.CLAMP	5-231, 5-233, 5-235, 5-237, 5-239, 5-241
1144552-0000	.PLATE	5-279, 5-281

Part No	Description	Page No
1144555-0000	.STUD SCREW	5-41, 5-43, 5-51, 5-53, 5-55, 5-105, 5-107, 5-115, 5-117, 5-119
1144566-0000	.FLANGE	5-5, 5-7
1144577-0000	.BLOCK	5-301, 5-303, 6-5, 6-7
1144579-0000	.AXLE	5-301, 5-303, 6-5, 6-7
1144593-0000	.PLATE	5-307, 5-313, 5-315
1144597-0000	.SPACER	5-307, 5-313, 5-315
1144598-0000	.SHAFT	5-313, 5-315
1144601-0000	.GUIDE STUD	4-27, 4-29, 4-39, 4-41, 4-51, 4-53, 4-55, 4-57, 4-59, 4-65, 4-67, 4-69, 4-71, 4-73
1144606-0000	.SIGN	2-161, 2-163, 2-165
1144607-0000	.SIGN	2-161, 2-163, 2-165
1144618-0000	.FLANGE	5-169, 5-171
1144620-0000	.WASHER	5-169, 5-171
1144621-0000	.PLATE	5-67, 5-69, 5-71, 5-73, 5-75, 5-153, 5-155, 5-161, 5-163
1144625-0000	.SPACER	5-307, 5-313, 5-315
1144645-0200	.PROTECTIVE COVER	5-307, 5-313
1144653-0000	.SWITCH	5-327
1144665-0000	.SEAL RING	5-169, 5-171
1144667-0000	.HINGE	5-309, 5-311, 5-317, 6-11
1144668-0000	.HINGE	5-309, 5-311, 5-317, 6-11
1144669-0000	.PIN	5-309, 5-311, 5-317, 6-11
1144678-0000	.SHAFT	5-5, 5-7
1144681-0000	.WASHER	5-5, 5-7, 5-211, 5-283
1144683-0000	.AXLE PIN	5-5, 5-7
1144684-0000	.SPACER	5-5, 5-7
1144685-0000	.SCREW	5-5, 5-7
1144686-0000	.TIE ROD	5-5, 5-7
1144687-0000	.TIE ROD	5-5, 5-7
1144688-0000	.SCREW	5-5, 5-7
1144719-0000	.RAIL	5-51, 5-53, 5-55
1144783-0000	.TIMING BELT	5-67, 5-69, 5-71, 5-73, 5-75, 5-145, 5-147, 5-149
1144784-0000	.TOOTHED PULLEY	5-307
1144788-0000	.TOOTHED PULLEY	5-307
1144794-0000	.SUPPORT	5-307, 5-313, 5-315
1144797-0000	.SUPPORT	5-169, 5-171
1144802-0000	.PULLEY	5-283
1144839-0000	.BLOCK	5-169, 5-171
1144841-0000	.TIMING BELT	5-307, 5-313, 5-315
1144849-0000	.SWITCH	5-211
1144892-0000	.GUIDE RIGHT	5-41, 5-43, 5-105, 5-107
1144893-0000	.GUIDE LEFT	5-41, 5-43, 5-105, 5-107
1144897-0000	.FOLDING BAR	5-51, 5-53, 5-55
1144898-0000	.FOLDING BAR	5-51, 5-53, 5-55
1144899-0000	.SUPPORT	5-279, 5-281
1144900-0000	.SUPPORT	5-169, 5-171
1144901-0000	.GUIDE	5-35, 5-37, 5-39
1144902-0000	.SUPPORT	5-35, 5-37, 5-39, 5-95, 5-97
1144905-0000	.SUPPORT	5-41, 5-43
1144914-0000	.LEVER	5-231, 5-233, 5-235, 5-237, 5-239, 5-241
1144915-0000	.LEVER	5-231, 5-233, 5-235, 5-237, 5-239, 5-241
1144916-0000	.ADJUSTING SCREW	5-231, 5-233, 5-235, 5-237, 5-239, 5-241
1144918-0000	.PLATE	5-67, 5-69, 5-71, 5-73, 5-75, 5-145, 5-147, 5-149
1144919-0000	.CARRIER	5-67, 5-69, 5-71, 5-73, 5-75, 5-145, 5-147, 5-149
1144924-0000	.BOTTOM	5-29, 5-31
1144926-0000	.FLAP	5-29, 5-31
1144927-0000	.FLAP	5-29, 5-31
1144928-0000	.PUSHER	5-231, 5-233, 5-235, 5-237, 5-239, 5-241
1144932-0000	.PLATE	5-231, 5-233, 5-235, 5-237, 5-239, 5-241
1144933-0000	.BLOCK	5-5, 5-7
1144941-0000	.COVERING PLATE	5-35, 5-37, 5-39, 5-95, 5-97
1144974-0000	.ADJUSTING PLATE	5-35, 5-37, 5-39, 5-95, 5-97
1144975-0000	.ATTACHMENT PLATE	5-35, 5-37, 5-39, 5-95, 5-97
1144976-0000	.STOP SCREW	5-35, 5-37, 5-39, 5-95, 5-97
1144978-0000	.CAM	5-231, 5-233, 5-235, 5-237, 5-239, 5-241
1144979-0000	.WASHER	5-35, 5-37, 5-39, 5-95, 5-97
1144990-0000	.FOLDING BAR	5-51, 5-53, 5-55
1147253-0000	.NUT	8-303, 8-307
1190007-0402	.PLMS RECEIVE	9-7
1195360-0000	.YOKE LEFT	4-261
1195361-0000	.YOKE RIGHT	4-273
1195397-0000	.COMPRESSION SPRING	1-287
1195466-0000	.PIPE	7-47
1254025-0000	.STRIP	2-213, 2-229
1254027-0000	.CORNER STRIP	2-229
1254028-0000	.FASTENING PLATE	2-213, 2-229
1254030-0000	.CHECKER PLATE	2-229
1254109-0000	.BRACKET	4-249, 4-251, 4-253
1254110-0000	.BRACKET	4-249, 4-251, 4-253
1254111-0000	.BRACKET	4-249, 4-251, 4-253
1254410-0000	.WASHER	1-337
1254442-0000	.CABLE SERIAL	9-149, 9-151
1254494-0000	.SPACER	2-179
1255117-0000	.PLAIN BEARING	4-295, 4-297
1255222-0000	.FRAME	3-13, 3-31
1255223-0000	.HOLDER	3-15, 3-33

Part No	Description	Page No
1255233-0000	.BUSHING	3-7, 3-9
1255261-0000	.FLANGE	3-7
1255293-0000	.CROSS BAR	7-49
1255365-0000	.MOUNTING PLATE	7-23
1255389-0000	.BUSHING	4-155, 4-157, 4-159, 4-161
1255390-0000	.BUSHING	4-155, 4-157, 4-159, 4-161
1255457-0000	.CARRIER RULER	4-165, 4-167
1255458-0000	.CARRIER RULER	4-165, 4-167
1255459-0000	.CARRIER RULER	4-165, 4-167
1255460-0000	.CARRIER RULER	4-165, 4-167
1255461-0000	.CARRIER RULER	4-211, 4-213, 4-215, 4-217
1255462-0000	.CARRIER RULER	4-211, 4-213, 4-215, 4-217
1255463-0000	.CARRIER RULER	4-211, 4-213, 4-215, 4-217
1255464-0000	.CARRIER RULER	4-211, 4-213, 4-215, 4-217
1255541-0000	.BUSHING	4-7, 4-9, 4-11, 4-17, 4-19, 4-21
1255551-0000	.SEAL CLOTH	1-319
1255557-0000	.GASKET	2-31
1255559-0000	.PEROXIDE TANK	2-17, 2-19
1255633-0000	.HATCH	7-59
1255635-0000	.HATCH	7-63
1255636-0000	.COVERING PANEL	7-51
1255637-0000	.COVER	7-51
1255638-0000	.COVERING PANEL	7-51
1255671-0000	.GABLE PLATE	7-53
1255916-0000	.BUSHING	4-83, 4-85, 4-89, 4-91
1260247-0000	.CLIP	7-23
1260303-0000	.WASHER	1-415
1260327-0000	.TUBE	7-23
1260328-0000	.SPRING	4-127
1260547-0100	.ICE WATER UNIT	7-13, 7-15
1260700-0000	.BLOCK	5-5, 5-7
1260701-0000	.PUSHER	5-231, 5-233, 5-235, 5-237, 5-239, 5-241
1260702-0000	.PLATE	5-231, 5-233, 5-235, 5-237, 5-239, 5-241
1260703-0000	.BOTTOM	5-29, 5-31
1260704-0000	.FLAP	5-29, 5-31, 5-77, 5-79
1260705-0000	.FLAP	5-29, 5-31
1260709-0000	.GUIDE UPPER R	5-41, 5-43
1260710-0000	.GUIDE UPPER L	5-41, 5-43
1260712-0000	.CRANK	5-321
1260714-0000	.SPACER	5-65
1260824-0000	.SPACER RING	5-5, 5-7
1260832-0000	.WASHER	5-283
1260851-0000	.AXLE PIN	5-289, 5-291, 5-293
1260852-0000	.WASHER	5-289, 5-291, 5-293
1260853-0000	.RING	5-289, 5-291, 5-293
1260883-0200	.CRANK	5-3
1260885-0000	.FLAP	5-29, 5-31
1260886-0000	.FLAP	5-29, 5-31
1260887-0000	.BLOCK	5-5, 5-7
1260888-0000	.BLOCK	5-231, 5-233, 5-235, 5-237, 5-239, 5-241
1260889-0000	.PUSHER	5-231, 5-233, 5-235, 5-237, 5-239, 5-241
1260894-0000	.PROTECTION	6-11
1260895-0000	.SPRING	5-231, 5-233, 5-235, 5-237, 5-239, 5-241, 6-51, 6-53
1260931-0000	.SCREW	5-169, 5-171
1260941-0000	.SLIDE	5-307
1260944-0000	.BUSHING	5-5, 5-7
1279409-0000	.PLATE	5-67, 5-69, 5-71, 5-73, 5-75, 5-153, 5-155, 5-161, 5-163
1279559-0000	.ARM	5-29, 5-31, 5-77, 5-79
1279582-0000	.RAIL	5-259, 5-261, 5-263, 5-265, 5-267, 5-269
1279670-0000	.SPACER	5-65
1279677-0100	.CRANK GUARD	5-3
1279680-0000	.PIPE	5-323, 5-325
1279688-0000	.SUPPORT	5-307, 5-313, 5-315
1279689-0000	.ACTIVATOR	5-313, 5-315
1282287-0000	.CARRIER	5-67, 5-69, 5-71, 5-73, 5-75, 5-145, 5-147, 5-149
1282290-0000	.GUIDE	5-67, 5-69, 5-71, 5-73, 5-75, 5-145, 5-147, 5-149
1282291-0000	.GUIDE	5-67, 5-69, 5-71, 5-73, 5-75, 5-145, 5-147, 5-149
1282294-0000	.FOLDING BAR	5-51, 5-53, 5-55
1282295-0000	.FOLDING BAR	5-51, 5-53, 5-55
1282335-0000	.FLANGE	5-283
1282343-0000	.BLOCK	5-283
1282345-0000	.SPRING	5-283
1282681-0000	.TOOTHED PULLEY	5-313, 5-315
1282705-0000	.SUPPORT	5-41, 5-43, 5-105, 5-107
1282708-0000	.BUSHING	5-13, 5-15, 5-25, 5-27, 5-29, 5-31, 5-77, 5-79
1282844-0000	.SUPPORT	5-169, 5-171
1282848-0000	.CARRIER	5-67, 5-69, 5-71, 5-73, 5-75, 5-145, 5-147, 5-149
1282876-0000	.PIPE	2-23
1282879-0000	.CONNECTING PIPE	2-23
1282891-0000	.PIPE	2-17, 2-19
1282892-0000	.TANK	2-27
1282893-0000	.PIPE	2-27
1282894-0100	.PEROXIDE TANK	2-15
1282895-0200	.PEROXIDE PIPE	2-15

Part No	Description	Page No
1282896-0100	.TANK	2-15
1282898-0000	.HOSE	2-27
1282899-0000	.HOSE	2-17, 2-19
1282901-0000	.PIPE	2-23
1282906-0000	.NIPPLE	2-17, 2-19
1285003-0000	.LINK	4-219
1285005-0000	.NUT	4-219
1285006-0000	.SPACER	4-219
1285009-0000	.HOLDER	5-259, 5-261, 5-263, 5-265, 5-267, 5-269
1285010-0000	.HOLDER	5-297, 5-299, 6-61, 6-63
1285012-0300	.FOLDING PART	5-3
1285014-0000	.DISTRIBUTOR	5-35, 5-37, 5-39, 5-95, 5-97
1285022-0000	.SIDE PLATE	5-301, 5-303, 6-5, 6-7, 10-11, 10-13
1285023-0000	.SIDE PLATE	5-301, 5-303, 6-5, 6-7, 10-11, 10-13
1285253-0000	.SPACER	5-259, 5-261, 5-263, 5-265, 5-267, 5-269
1285254-0000	.WASHER	5-289, 5-291, 5-293
1285260-0500	.OUT FEED	5-3
1285267-0000	.SUPPORT	5-41, 5-43, 5-105, 5-107
1285291-0000	.PLATE	5-179
1285293-0000	.HEATING PIPE	5-173, 5-175, 5-177
1285299-0000	.BRACKET	5-35, 5-37, 5-39, 5-95, 5-97
1285307-0000	.SPACER	5-173, 5-175, 5-177
1285308-0000	.GASKET	5-173, 5-175, 5-177
1285310-0000	.EXTENSION	5-199, 5-201, 5-203, 5-205, 5-207, 5-209
1285311-0000	.PLATE	5-173, 5-175, 5-177
1285312-0000	.GASKET	5-173, 5-175, 5-177, 6-43, 6-45
1285363-0000	.TUBE	7-23
1285870-0000	.EXTENSION	5-199, 5-201, 5-203, 5-205, 5-207, 5-209
1285874-0000	.SPACER	5-199, 5-201, 5-203, 5-205, 5-207, 5-209
1285875-0200	.BELT TENSIONER	5-283
1285955-0000	.PLATE	5-313, 5-315
1285956-0000	.BLOCK	5-313, 5-315
1296066-0000	.NOZZLE	5-199, 5-201, 5-203, 5-205, 5-207, 5-209
1296067-0000	.NOZZLE	5-199, 5-201, 5-203, 5-205, 5-207, 5-209
1296068-0000	.NOZZLE	5-199, 5-201, 5-203, 5-205, 5-207, 5-209
1296070-0000	.HEATING PIPE	5-173, 5-175, 5-177
1296072-0000	.EXTENSION	5-199, 5-201, 5-203, 5-205, 5-207, 5-209
1296079-0000	.RAIL	5-259, 5-261, 5-263, 5-265, 5-267, 5-269
1296153-0000	.GUIDE	5-199, 5-201, 5-203, 5-205, 5-207, 5-209
1296180-0000	.FOLDING DEVICE	5-13, 5-15
1296181-0000	.FOLDING DEVICE	5-13, 5-15
1296218-0200	.LID	2-293
1296289-0000	.TUNNEL	2-291
1296290-0000	.GASKET	2-291
1296387-0000	.NOZZLE	5-199, 5-201, 5-203, 5-205, 5-207, 5-209
1296845-0000	.BRACKET	2-349, 2-351
1296877-0100	.SEAL KIT	10-9
1296878-0100	.SEAL KIT	10-9
1296879-0100	.SEAL KIT	10-9
1296969-0000	.SCREW HOLDER	5-29, 5-31, 5-77, 5-79
1296970-0000	.SCREW BUSHING	5-29, 5-31, 5-77, 5-79
1317042-0000	.RAIL	5-51, 5-53, 5-55
1317043-0000	.SUPPORT	5-51, 5-53, 5-55, 5-115, 5-117, 5-119
1317047-0000	.RAIL	5-51, 5-53, 5-55
1317085-0000	.NUT	5-199, 5-201, 5-203, 5-205, 5-207, 5-209, 6-43, 6-45
1317088-0000	.SPACER	5-41, 5-43, 5-51, 5-53, 5-55
1317211-0000	.COVERING PLATE	5-35, 5-37, 5-39, 5-95, 5-97
1317213-0000	.ADJUSTING PLATE	5-35, 5-37, 5-39, 5-95, 5-97
1317216-0000	.FOLDING BAR	5-51, 5-53, 5-55
1317217-0000	.FOLDING BAR	5-51, 5-53, 5-55
1317218-0000	.SPACER	5-65, 5-137, 5-139, 5-141, 5-143, 5-259, 5-261, 5-263, 5-265, 5-267, 5-269
1317226-0000	.WEIGHT	2-25
1317228-0000	.WASHER	2-273
1317362-0000	.SHAFT	5-231, 5-233, 5-235, 5-237, 5-239, 5-241
1317363-0000	.SHAFT	5-231, 5-233, 5-235, 5-237, 5-239, 5-241
1317438-0000	.FORK	1-245, 1-247, 1-249, 1-251
1317439-0000	.CATCH	4-39, 4-41
1317440-0000	.STOP PIN	4-27, 4-29, 4-39, 4-41
1317475-0000	.BRACKET	2-109, 2-111, 2-113, 2-115
1317554-0000	.FLAP	5-29, 5-31
1317555-0000	.FLAP	5-29, 5-31
1317556-0000	.BOTTOM	5-29, 5-31
1317633-0000	.SPRING	5-35, 5-37, 5-39
1317650-0000	.GUIDE	5-67, 5-69, 5-71, 5-73, 5-75, 5-145, 5-147, 5-149
1317651-0000	.GUIDE	5-67, 5-69, 5-71, 5-73, 5-75, 5-145, 5-147, 5-149
1317652-0000	.FOLDING BAR	5-51, 5-53, 5-55
1317653-0000	.FOLDING BAR	5-51, 5-53, 5-55
1317654-0000	.PUSHER	5-231, 5-233, 5-235, 5-237, 5-239, 5-241
1317655-0000	.PLATE	5-231, 5-233, 5-235, 5-237, 5-239, 5-241
1317656-0000	.INSERT	5-29, 5-31
1317711-0000	.SHAFT	8-75, 8-155
1317712-0000	.SHAFT	8-75, 8-155
1317740-0000	.RUBBER SLEEVE	4-27, 4-29, 4-39, 4-41
1317741-0000	.CATCH	4-27, 4-29

Part No	Description	Page No
1317742-0000	.CANTILEVER	4-27, 4-29, 4-39, 4-41
1317784-0000	.BRACKET	2-25
1317787-0000	.CATCH	5-231, 5-233, 5-235, 5-237, 5-239, 5-241
1317789-0000	.BLOCK	5-5, 5-7
1317801-0000	.NOZZLE	5-199, 5-201, 5-203, 5-205, 5-207, 5-209
1317802-0000	.NOZZLE	5-199, 5-201, 5-203, 5-205, 5-207, 5-209
1317803-0000	.NOZZLE	5-199, 5-201, 5-203, 5-205, 5-207, 5-209
1317804-0000	.SPACER	5-199, 5-201, 5-203, 5-205, 5-207, 5-209
1317805-0000	.BAR	5-67, 5-69, 5-71, 5-73, 5-75, 5-153, 5-155
1317823-0000	.CANTILEVER	4-27, 4-29, 4-39, 4-41
1317824-0000	.CATCH	4-27, 4-29, 4-39, 4-41
1334012-0000	.GUIDE UPPER L	5-41, 5-43
1334013-0000	.GUIDE UPPER R	5-41, 5-43
1334018-0000	.SHIM	5-5, 5-7
1334081-0000	.CURVE	4-231, 4-233, 4-235, 4-237
1334113-0000	.HOLDER	5-259, 5-261, 5-263, 5-265, 5-267, 5-269
1334187-0000	.PLATE	8-137
1334188-0000	.AXLE PIN	8-137
1334189-0000	.BLOCK	8-137
1334190-0000	.BLOCK	8-137
1334271-0000	.BAR	5-67, 5-69, 5-71, 5-73, 5-75, 5-161, 5-163
1334328-0000	.SPACER	5-5, 5-7
1334447-0000	.SPACER	5-41, 5-43, 5-105, 5-107
1334480-0000	.SUPPORT	5-35, 5-37, 5-39, 5-95, 5-97
1334507-0000	.TUBE	1-315
1334523-0000	.SUPPORT	5-41, 5-43, 5-105, 5-107
1334559-0000	.GUIDE UPPER R	5-41, 5-43, 5-105, 5-107
1334560-0000	.GUIDE UPPER L	5-41, 5-43, 5-105, 5-107
1334561-0000	.SLIDE	5-67, 5-69, 5-71, 5-73, 5-75
1334562-0000	.SLIDE	5-67, 5-69, 5-71, 5-73, 5-75
1334632-0000	.SPACER	5-199, 5-201, 5-203, 5-205, 5-207, 5-209
1334633-0200	.VOLUME FLAP CUTTING	4-5
1334634-0200	.VOLUME FLAP PRESSURE	4-5
1334635-0200	.SHOCK ABSORBER	4-5
1334636-0200	.SHOCK ABSORBER	4-5
1334651-0100	.LINK	4-257
1334652-0000	.LINK	4-287
1334653-0000	.LINK	3-11
1334654-0000	.CONNECTION CLAMP	3-25, 4-287
1334655-0000	.LINK ROD	3-25
1334659-0000	.SCREW	3-11, 4-287
1334718-0000	.SPACER	5-51, 5-53, 5-55
1334856-0000	.COUNTER ROLLER	1-31, 1-33, 1-75, 1-77, 1-79
1334939-0000	.PLUG	3-17
1334999-0000	.PUSHER	5-231, 5-233, 5-235, 5-237, 5-239, 5-241
1338143-0000	.DIMCAP, CONTROL PANEL SUPPORT, SHIMS	11-83
1338402-0000	.GUIDE	11-11
1338403-0000	.GUIDE	11-11
1338404-0000	.BRACKET	11-11
1338405-0000	.BRACKET	11-11
1338793-0000	.BRACKET	4-267, 4-269, 4-271, 4-279, 4-281, 4-283
1346149-0000	.FOLDING BAR	5-51, 5-53, 5-55
1346150-0000	.FOLDING BAR	5-51, 5-53, 5-55
1346153-0000	.STOP PIN	4-27, 4-29, 4-39, 4-41
1346157-0000	.VOLUME BULGE	4-7, 4-9, 4-11, 4-17, 4-19, 4-21
1346158-0000	.VOLUME SHIM	4-7, 4-9, 4-11, 4-17, 4-19, 4-21, 10-15, 10-17, 10-19, 10-21, 10-23, 10-25
1346307-0000	.HOLDER	5-327
1346312-0000	.SCREW	2-349, 2-351
1346313-0000	.PLATE	2-349, 2-351
1346340-0000	.BRACKET	5-41, 5-43, 5-105, 5-107
1346343-0000	.RAIL	5-51, 5-53, 5-55, 5-115, 5-117, 5-119
1346344-0000	.RAIL	5-51, 5-53, 5-55, 5-115, 5-117, 5-119
1346395-0000	.LOCKING ARM	8-87, 8-89
1346399-0000	.DISTANCE	8-61
1346400-0000	.CABLE DUCT	8-65, 8-67
1346401-0000	.HOLDER	8-61
1346402-0000	.PLATE	8-63
1346403-0000	.BRACKET	8-87, 8-89
1346404-0000	.BRACKET	8-87, 8-89
1346405-0000	.WASHER	8-63
1346406-0000	.COVER PLATE	8-63
1346407-0000	.COVER	8-63
1346408-0000	.SUPPORT	8-87, 8-89
1346409-0000	.SHAFT	8-87, 8-89
1346410-0000	.BRACKET	8-63
1346411-0000	.BRACKET	8-63
1346417-0000	.FRAME	8-63
1346418-0000	.FRAME	8-61
1346421-0000	.FRAME	8-61
1346423-0000	.COVER	8-281, 8-283
1346427-0000	.DISTANCE	8-269
1346429-0300	.BRACKET	8-35, 8-37, 8-39
1346430-0100	.SUPPORT	8-35, 8-37, 8-39
1346431-0100	.HOLDER	8-35, 8-37, 8-39

Part No	Description	Page No
1346471-0000	.WEDGE	5-67, 5-69, 5-71, 5-73, 5-75, 5-145, 5-147, 5-149
1346525-0000	.COVER	2-349, 2-351
1346539-0000	.CONNECTING ROD	5-231, 5-233, 5-235, 5-237, 5-239, 5-241
1346568-0000	.HEAT EXCHANGER	1-315
1346580-0000	.NOZZLE	5-199, 5-201, 5-203, 5-205, 5-207, 5-209
1346581-0000	.NOZZLE	5-199, 5-201, 5-203, 5-205, 5-207, 5-209
1346588-0000	.DRIP PLATE	5-279, 5-281
1346641-0000	.SPACER	5-199, 5-201, 5-203, 5-205, 5-207, 5-209
1346642-0000	.SPACER	5-199, 5-201, 5-203, 5-205, 5-207, 5-209
1346643-0000	.NOZZLE	5-199, 5-201, 5-203, 5-205, 5-207, 5-209
1346644-0000	.NOZZLE	5-199, 5-201, 5-203, 5-205, 5-207, 5-209
1346646-0000	.EXTENSION	5-199, 5-201, 5-203, 5-205, 5-207, 5-209
1346656-0000	.ROD	1-227
1346657-0000	.CYLINDER BRACKET	1-227
1346658-0000	.BRACKET	1-227
1346659-0000	.SCREW	1-227
1346677-0000	.CYLINDER	1-227
1346678-0000	.NOZZLE	5-199, 5-201, 5-203, 5-205, 5-207, 5-209
1346679-0000	.NOZZLE	5-199, 5-201, 5-203, 5-205, 5-207, 5-209
1346736-0000	.WEDGE	5-67, 5-69, 5-71, 5-73, 5-75, 5-145, 5-147, 5-149
1346845-0000	.PLATE	3-17
1346846-0000	.BELT HOLDER	3-17
1346885-0000	.SUPPORT	2-265, 2-267, 2-287, 2-303, 2-313, 2-333
1346890-0000	.SPACER	3-21
1346988-0000	.ROLL	8-25
1347017-0000	.PULLEY	5-211
1347018-0000	.PLUG	5-231, 5-233, 5-235, 5-237, 5-239, 5-241
1347057-0000	.GUIDE	5-35, 5-37, 5-39, 5-95, 5-97
1347108-0000	.PLATE	5-169, 5-171
1347109-0000	.PLATE	5-169, 5-171
1347245-0000	.HEAT EXCHANGER	1-229
1347410-0000	.ACTIVATOR	5-307
1347495-0000	.AXLE PIN	5-13, 5-15
1347496-0000	.SCREW	5-13, 5-15, 5-25, 5-27
1347526-0000	.BRACKET	4-27, 4-29, 4-39, 4-41
1347600-0000	.SUPPORT	5-13, 5-15
1347673-0000	.BRACKET	9-121
1347699-0000	.PLATE	5-307
1347704-0000	.THERMOCOUPLE	2-17, 2-19
1347839-0000	.PULLEY	3-7, 3-9
1347878-0000	.RAIL	2-103
1347880-0000	.INSERT	1-259, 1-399, 1-401
1348041-0000	.SPACER	5-41, 5-43
1348042-0000	.SPACER	5-51, 5-53, 5-55
1348043-0000	.SPACER	5-199, 5-201, 5-203, 5-205, 5-207, 5-209
1348047-0000	.FORK	1-245, 1-247, 1-249, 1-251
1348048-0000	.FORK	1-245, 1-247, 1-249, 1-251
1348049-0000	.FORK	1-245, 1-247, 1-249, 1-251
1348056-0300	.FOLDING PART	5-5, 5-7
1348072-0000	.DRIP PLATE	5-211
1348132-0000	.SLIDE	5-67, 5-69, 5-71, 5-73, 5-75
1348133-0000	.SLIDE	5-67, 5-69, 5-71, 5-73, 5-75, 5-153, 5-155
1348134-0000	.SLIDE	5-67, 5-69, 5-71, 5-73, 5-75
1348135-0000	.SLIDE	5-67, 5-69, 5-71, 5-73, 5-75, 5-153, 5-155
1348136-0000	.SLIDE	5-67, 5-69, 5-71, 5-73, 5-75, 5-153, 5-155
1348138-0000	.SLIDE	5-67, 5-69, 5-71, 5-73, 5-75
1348139-0000	.SLIDE	5-67, 5-69, 5-71, 5-73, 5-75, 5-161, 5-163
1348140-0000	.SLIDE	5-67, 5-69, 5-71, 5-73, 5-75
1348141-0000	.SLIDE	5-67, 5-69, 5-71, 5-73, 5-75, 5-161, 5-163
1348142-0000	.SLIDE	5-67, 5-69, 5-71, 5-73, 5-75, 5-161, 5-163
1348144-0000	.BAR	5-67, 5-69, 5-71, 5-73, 5-75, 5-153, 5-155
1348145-0000	.BAR	5-67, 5-69, 5-71, 5-73, 5-75
1348146-0000	.BAR	5-67, 5-69, 5-71, 5-73, 5-75
1348147-0000	.BAR	5-67, 5-69, 5-71, 5-73, 5-75, 5-153, 5-155
1348148-0000	.BAR	5-67, 5-69, 5-71, 5-73, 5-75, 5-153, 5-155
1348150-0000	.BAR	5-67, 5-69, 5-71, 5-73, 5-75, 5-161, 5-163
1348151-0000	.BAR	5-67, 5-69, 5-71, 5-73, 5-75
1348152-0000	.BAR	5-67, 5-69, 5-71, 5-73, 5-75
1348153-0000	.BAR	5-67, 5-69, 5-71, 5-73, 5-75, 5-161, 5-163
1348154-0000	.BAR	5-67, 5-69, 5-71, 5-73, 5-75, 5-161, 5-163
1348169-0000	.PLATE	5-67, 5-69, 5-71, 5-73, 5-75, 5-153, 5-155, 5-161, 5-163
1348196-0000	.FASTENING PLATE	4-275, 4-277
1348197-0000	.HOLDER	2-161, 2-163, 2-165
1348263-0000	.FLANGE	11-51
1348303-0000	.STUD SCREW	5-211
1348359-0000	.BRACKET	2-109, 2-111, 2-113, 2-115
1348386-0000	.BEARING HOUSING	2-349, 2-351
1348455-0200	.YOKE LEFT	4-257
1348456-0200	.PRESSURE ARM LEFT	4-257
1348457-0200	.CUTTING ARM LEFT	4-257
1348460-0200	.YOKE RIGHT	4-257
1348461-0200	.PRESSURE ARM RIGHT	4-257
1348462-0200	.CUTTING ARM RIGHT	4-257
1348466-0100	.SCISSOR ARM LINK	4-257

Part No	Description	Page No
1348483-0000	.SPRING RIGHT	4-27, 4-29, 4-39, 4-41, 4-51, 4-53, 4-55, 4-57, 4-59, 4-65, 4-67, 4-69, 4-71, 4-73
1348484-0000	.SPRING LEFT	4-27, 4-29, 4-39, 4-41, 4-51, 4-53, 4-55, 4-57, 4-59, 4-65, 4-67, 4-69, 4-71, 4-73
1348504-0000	.SLEEVE	4-127
1348529-0000	.STRAINER	2-23
1348530-0000	.LID	2-23
1348537-0000	.TIMING BELT	5-231, 5-233, 5-235, 5-237, 5-239, 5-241
1348540-0000	.PIVOT AXLE	5-289, 5-291, 5-293
1348545-0000	.RAIL	4-129, 4-131, 4-133
1348546-0000	.RAIL	4-187, 4-189, 4-191
1348635-0000	.RUBBER SEAL	5-327
1348663-0000	.PLATE	5-327
1348669-0000	.SCREW	4-267, 4-269, 4-271, 4-279, 4-281, 4-283
1348671-0000	.JOINT LEFT	4-267, 4-269, 4-271
1348672-0000	.JOINT RIGHT	4-279, 4-281, 4-283
1348808-0000	.CURVE	4-231, 4-233, 4-235, 4-237
1348809-0000	.CURVE	4-231, 4-233, 4-235, 4-237
1348854-0000	.PLATE	5-301, 5-303, 6-5, 6-7
1348918-0000	.DISTANCE	8-269
1348920-0000	.CRADLE	5-301, 5-303, 6-5, 6-7
1348955-0000	.KNIFE	4-219, 10-15, 10-17, 10-19, 10-21, 10-23, 10-25
1348956-0000	.KNIFE	4-219, 10-15, 10-17, 10-19, 10-21, 10-23, 10-25
1348957-0000	.BRACKET	5-313
1348963-0000	.SLIDE	5-313
1348966-0000	.KNIFE	4-219, 10-15, 10-17, 10-19, 10-21, 10-23, 10-25
1348990-0000	.SUPPORT	5-327
1349014-0000	.PAD	8-145
1349017-0000	.PLATE	5-301, 5-303, 6-5, 6-7
1349020-0000	.GLAND FITTING	5-327
1349087-0000	.DISTRIBUTOR	5-35, 5-37, 5-39, 5-95, 5-97
1349152-0000	.TIMING BELT	5-67, 5-69, 5-71, 5-73, 5-75, 5-145, 5-147, 5-149
1349160-0000	.SPACER	5-283
1349181-0000	.TOUCH GUARD	8-139
1349187-0000	.SPRING	2-349, 2-351
1349208-0000	.VOLUME SHIM	4-7, 4-9, 4-11, 4-17, 4-19, 4-21, 10-15, 10-17, 10-19, 10-21, 10-23, 10-25
1349266-0000	.PLATE	3-19, 3-35
1349319-0000	.CANTILEVER	4-27, 4-29, 4-39, 4-41
1349320-0000	.CATCH	4-27, 4-29, 4-39, 4-41
1349398-0000	.NUT	1-227
1349432-0000	.CATCH	8-25
1349516-0000	.SHAFT	5-231, 5-233, 5-235, 5-237, 5-239, 5-241
1349517-0000	.TOOTHED PULLEY	5-231, 5-233, 5-235, 5-237, 5-239, 5-241
1349518-0000	.SUPPORT	5-231, 5-233, 5-235, 5-237, 5-239, 5-241
1349519-0000	.ACTIVATOR	5-231, 5-233, 5-235, 5-237, 5-239, 5-241
1349566-0000	.COVER	5-331, 6-81
1349568-0000	.CONNECTION BOX	2-311, 2-321, 5-333, 6-83
1349581-0000	.FLAG	8-135
1349584-0000	.BUSHING	4-129, 4-131, 4-133, 4-187, 4-189, 4-191
1349595-0000	.SLEEVE	4-127
1349599-0000	.HOLDER	4-129, 4-131, 4-133, 4-187, 4-189, 4-191
1349608-0000	.HOLDER	1-315
1349612-0000	.PISTON	4-127
1349672-0000	.GUIDE	8-25
1349738-0100	.PRESSURE TEST EQUIPMENT	11-5
1349741-0000	.CURVE	4-231, 4-233, 4-235, 4-237
1349744-0000	.VOLUME CAM	4-231, 4-233, 4-235, 4-237
1349780-0000	.LID	4-261, 4-273
1349851-0000	.ROLL	1-31, 1-33, 1-75, 1-77, 1-79
1349853-0000	.ROLL	1-75, 1-77, 1-79
1349867-0000	.FASTENING PLATE	4-263, 4-265
1349868-0000	.FASTENING PLATE	4-263, 4-265, 4-275, 4-277
1349914-0100	.TEMPLATE FILLING PIPE	10-35
1349925-0000	.PLATE	4-155, 4-157, 4-159, 4-161
1349972-0000	.SPRING HOUSING	4-261, 4-273
1349980-0000	.SHAFT	4-129, 4-131, 4-133, 4-187, 4-189, 4-191
1349985-0000	.SPRING	5-289, 5-291, 5-293
1349994-0000	.NUT	8-25
1350042-0000	.GASKET	5-225, 5-227, 5-229
1350210-0100	.RUNNER	3-15, 3-33
1350217-0150	.GUIDE	3-13
1350218-0150	.GUIDE	3-31
1350263-0000	.SPRING RIGHT	4-27, 4-29, 4-39, 4-41, 4-51, 4-53, 4-55, 4-57, 4-59, 4-65, 4-67, 4-69, 4-71, 4-73
1350264-0000	.SPRING LEFT	4-27, 4-29, 4-39, 4-41, 4-51, 4-53, 4-55, 4-57, 4-59, 4-65, 4-67, 4-69, 4-71, 4-73
1350305-0000	.SEALING RING	5-285
1350421-0000	.NOZZLE	5-199, 5-201, 5-203, 5-205, 5-207, 5-209
1350422-0000	.NOZZLE	5-199, 5-201, 5-203, 5-205, 5-207, 5-209
1350423-0000	.FOLDING BAR	5-41, 5-43, 5-105, 5-107
1350424-0000	.GUIDE RIGHT	5-41, 5-43, 5-105, 5-107
1350425-0000	.GUIDE LEFT	5-41, 5-43, 5-105, 5-107
1350440-0000	.LEVER	5-13, 5-15, 5-25, 5-27
1350441-0000	.SUPPORT	5-13, 5-15
1350497-0000	.ASSEMBLY TOOL	11-5
1350498-0000	.ASSEMBLY TOOL	11-5
1350543-0000	.AXLE PIN	5-289, 5-291, 5-293
1350564-0000	.CLAMP HUB	5-283

Part No	Description	Page No
1350721-0000	.STUD SCREW	5-41, 5-43, 5-51, 5-53, 5-55
1350808-0000	.BLOCK	5-5, 5-7
1350809-0000	.BLOCK	5-231, 5-233, 5-235, 5-237, 5-239, 5-241
1350810-0000	.PUSHER	5-231, 5-233, 5-235, 5-237, 5-239, 5-241
1350824-0000	.AXLE PIN	3-25
1350825-0000	.LOCK	3-15, 3-33
1350826-0000	.LOCK	3-15, 3-33
1359085-0000	.T-HOLDER	5-275
1359565-0000	.NUT	5-273, 5-275
1360149-0000	.SPACER	5-309, 5-311, 5-317, 6-11
1360318-0000	.CARRIER RULER	4-165, 4-167
1360319-0000	.CARRIER RULER	4-211, 4-213, 4-215, 4-217
1360399-0000	.PIPE HOLDER	11-57, 11-59
1361560-0000	.PLATE	7-17
1361918-0300	.WHEEL	5-3
1361922-0200	.DROP CHUTE VARIANT	5-3
1361923-0200	.INFEED CONVEYOR VARIANT	5-3
1363297-0000	.CABLE LVDS 10M	2-185, 2-187, 2-189, 2-191
1366726-0000	.HOLDER	5-275
1366727-0000	.CLAMP	5-273, 5-275
1366777-0101	.ANGLED RAIL HOLDER TPC21	5-259, 5-261, 5-263, 5-265, 5-267, 5-269
1367098-0000	.BRAID	11-83
1369439-0102	.PLMS ON-LINE	11-67
1369599-0100	.TERMINAL	11-85
1369672-0000	.BRACKET	11-85
1369673-0000	.TUBE	11-85
1369706-0000	.RAIL	11-87
1369716-0000	.CABLE DUCT	11-85
1369717-0000	.CABLE DUCT	11-85
1478000-0000	.HOSE	4-263, 4-265, 4-275, 4-277
1478001-0000	.HOSE	4-263, 4-265, 4-275, 4-277
1478127-0000	.DRIP PLATE	5-279, 5-281
1478170-0000	.CONTAINER	1-351
1478189-0000	.SUPPORT	5-231, 5-233, 5-235, 5-237, 5-239, 5-241, 6-51, 6-53
1478190-0000	.TEMPLATE	11-27
1478214-0000	.SLIDE	5-67, 5-69, 5-71, 5-73, 5-75
1478215-0000	.SLIDE	5-67, 5-69, 5-71, 5-73, 5-75
1478228-0000	.CAM	5-289, 5-291, 5-293
1478235-0000	.PLATE	5-259, 5-261, 5-263, 5-265, 5-267, 5-269
1478302-0000	.AXLE BOLT	5-285
1478303-0000	.TENSION SPRING	8-25
1478359-0000	.ROLLER	1-71, 1-73
1478389-0000	.COVERING PLATE	2-295
1478391-0000	.GASKET	2-295
1478393-0000	.CATCH	4-27, 4-29, 4-39, 4-41
1478395-0000	.CATCH	4-27, 4-29, 4-39, 4-41
1478396-0000	.STOP	4-27, 4-29, 4-39, 4-41
1478497-0000	.VOLUME CAM	4-231, 4-233, 4-235, 4-237
1478558-0000	.WASHER	5-289, 5-291, 5-293
1478583-0100	.PRESSURE GAUGE	11-5
1478584-0000	.NIPPLE	11-25
1478585-0000	.NEEDLE	11-25
1478659-0000	.BRACKET	5-331, 6-81
1478753-0000	.SHAFT	5-283
1478768-0200	.KNIFE	4-5
1478813-0000	.SPACER	1-287
1478814-0000	.SENSOR	1-287
1478905-0000	.FLANGE	5-283
1478908-0000	.SUPPORT	5-283
1478925-0000	.HATCH	5-289, 5-291, 5-293
1478926-0000	.GUIDE RIGHT	5-41, 5-43, 5-105, 5-107
1478927-0000	.GUIDE LEFT	5-41, 5-43, 5-105, 5-107
1478928-0000	.BUSHING	5-301, 5-303, 6-5, 6-7
1484002-0000	.PLATE	4-155, 4-157, 4-159, 4-161
1484003-0000	.PLATE	4-155, 4-157, 4-159, 4-161
1484067-0000	.BRACKET	1-333, 1-335
1484080-0000	.SUPPORT	1-229
1484081-0000	.BRACKET	1-317, 7-29
1484093-0000	.INSERT	2-189, 2-191
1484096-0000	.COVER	5-173, 5-175, 5-177
1484196-0100	.PACK COUNTER	5-329, 6-79
1484197-0100	.CONNECTION BOX	5-329, 6-79
1484210-0200	.OUT FEED DRIVING SYSTEM	5-247, 5-249, 5-251
1484250-0000	.VOLUME CAM	4-231, 4-233, 4-235, 4-237
1484251-0000	.VOLUME CAM	4-231, 4-233, 4-235, 4-237
1484289-0000	.HATCH	5-289, 5-291, 5-293
1484320-0000	.ROD	4-267, 4-269, 4-271, 4-279, 4-281, 4-283
1484363-0000	.COVER	8-281, 8-283
1484379-0000	.INSERT	2-185, 2-187, 2-189, 2-191
1484405-0000	.PIPE	1-355, 1-357
1484428-0000	.PLASTIC PLUG	1-321, 1-323
1484447-0000	.BALL BEARING	5-283
1484448-0000	.ROLLER BEARING	5-283
1484620-0000	.SHAFT	5-307

Part No	Description	Page No
1484693-0000	.KNIFE HOLDER	8-167
1484695-0000	.KNIFE	8-167, 10-9
1484703-0000	.TIE ROD	8-167
1484704-0000	.SHAFT	8-161, 8-241
1484705-0000	.SLIDER	8-169
1484706-0000	.GEAR WHEEL	8-169
1484707-0200	.STRIP MAGAZINE	8-3, 8-5, 8-7, 8-9
1484708-0000	.MOUNTING PLATE	8-135
1484711-0000	.BRACKET	8-143
1484718-0000	.AXLE PIN	8-135
1484719-0000	.AXLE PIN	8-143
1484720-0100	.HINGE	8-133
1484724-0000	.HUB	8-141
1484725-0100	.HUB	8-133
1484726-0000	.SHAFT	8-141
1484728-0000	.BRACKET	8-241
1484738-0000	.BRACKET	8-241
1484740-0000	.BRACKET	8-135
1484745-0100	.WEB GUIDE	8-149, 8-151, 8-241
1484752-0000	.SLIDER	8-251, 8-253
1484760-0000	.SLIDER	8-251, 8-253
1484761-0000	.ANGLE BRACKET	8-251, 8-253
1484766-0000	.DANCE ROLLER	8-241, 8-251, 8-253
1484776-0000	.RAIL	8-169
1484777-0000	.SLIDER	8-169
1484778-0000	.PLATE	8-251, 8-253
1484779-0000	.ROD	8-169
1484781-0000	.PIN	8-167
1484782-0000	.CLAMP BLOCK	8-169
1484783-0000	.CLAMPING ELEMENT	8-169
1484784-0000	.LOCATING PIECE	8-169
1484785-0000	.LOCATING PIECE	8-169
1484865-0000	.VOLUME FLAP	4-17, 4-19, 4-21
1484866-0000	.VOLUME FLAP	4-7, 4-9, 4-11
1484867-0000	.VOLUME FLAP	4-7, 4-9, 4-11
1484868-0000	.VOLUME FLAP	4-17, 4-19, 4-21
1484889-0100	.DOOR	7-55
1484890-0000	.DOOR	7-57
1484969-0000	.SLEEVE	1-143, 1-145
1487023-0000	.PIPE	7-47
1487038-0300	.OUTFEED WHEEL	5-247, 5-249, 5-251
1487158-0300	.FLAP HEATER VARIANT	5-3
1487338-0200	.SUPPORT LEVEL DETECTOR	2-107
1487430-0000	.COVER	9-19
1487431-0000	.GASKET	9-19
1487504-0000	.WASHER	4-231, 4-233, 4-235, 4-237
1487505-0001	.WASHER	4-231, 4-233, 4-235, 4-237
1487505-0002	.WASHER	4-231, 4-233, 4-235, 4-237
1487510-0000	.RACK GEAR	8-169
1487511-0000	.BRACKET	8-169
1487517-0000	.CATCH	8-167
1487518-0000	.RULER	8-179, 8-181, 8-189, 8-191
1487519-0000	.SHAFT	8-251, 8-253
1487528-0100	.CYLINDER	8-189, 8-191
1487530-0001	.GUIDE ROD	8-251, 8-253
1487536-0000	.GUIDE BRACKET	8-251, 8-253
1487537-0000	.BRACKET	8-251, 8-253
1487538-0000	.BRACKET	8-251, 8-253
1487544-0200	.SIDE FEEDER	8-111, 8-113
1487550-0000	.ANGLE BRACKET	8-251, 8-253
1487551-0000	.PLATE	8-251, 8-253
1487554-0000	.BRACKET	8-169
1487555-0000	.BUSHING	8-169
1487556-0000	.BAR	8-169
1487557-0000	.BAR	8-169
1487558-0000	.FASTENING PLATE	8-169
1487559-0000	.SLIDER	8-169
1487560-0200	.MACHINE BODY	8-3, 8-5, 8-7, 8-9
1487618-0000	.CUTTING JAW	4-155, 4-157, 4-159, 4-161
1487619-0000	.PLATE	4-155, 4-157, 4-159, 4-161
1487626-0000	.VOLUME BULGE	4-7, 4-9, 4-11, 4-17, 4-19, 4-21, 4-51, 4-53, 4-55, 4-57, 4-59, 4-65, 4-67, 4-69, 4-71, 4-73
1487627-0000	.VOLUME SHIM	4-7, 4-9, 4-11, 4-17, 4-19, 4-21, 4-51, 4-53, 4-55, 4-57, 4-59, 4-65, 4-67, 4-69, 4-71, 4-73, 10-15, 10-17, 10-19, 10-21, 10-23, 10-25
1487628-0000	.WEDGE	4-7, 4-9, 4-11, 4-17, 4-19, 4-21
1487629-0100	.DAMPER	3-13
1487630-0100	.DAMPER	3-31
1487631-0000	.BRACKET	3-19, 3-35
1487632-0000	.FORK	3-19, 3-35
1487633-0000	.AXLE PIN	3-19, 3-35
1487634-0000	.AXLE PIN	3-19, 3-35
1487635-0000	.WHEEL	3-19, 3-35
1487636-0000	.STOPPER	3-19, 3-35
1487684-0000	.RAIL	5-259, 5-261, 5-263, 5-265, 5-267, 5-269

Part No	Description	Page No
1487738-0000	.FLAP	5-29, 5-31
1487739-0000	.FLAP	5-29, 5-31, 5-77, 5-79
1487763-0000	.SHAFT	8-157, 8-159
1487765-0000	.SPACER	8-251, 8-253
1487769-0000	.SPACER	8-251, 8-253
1487770-0000	.BRACKET	8-179, 8-181, 8-189, 8-191
1487779-0000	.SHAFT	8-179, 8-181, 8-189, 8-191
1487781-0000	.BRACKET	8-179, 8-181, 8-189, 8-191
1487782-0000	.SHAFT	8-179, 8-181, 8-189, 8-191
1487784-0000	.BRACKET	8-245
1487788-0000	.SPACER	8-247
1487795-0000	.PLATE	8-241
1487796-0000	.PLATE	8-241
1487800-0000	.PLATE	8-241
1487802-0000	.SPACER	8-241
1487808-0200	.BRACKET	8-3, 8-5, 8-7, 8-9
1487821-0000	.SPACER	5-169, 5-171
1487922-0000	.FOLDING DEVICE	5-13, 5-15, 5-25
1487923-0000	.FOLDING DEVICE	5-13, 5-15, 5-27
1487929-0000	.SPACER	5-65
1487946-0000	.SHAFT	4-51, 4-53, 4-55, 4-57, 4-59, 4-65, 4-67, 4-69, 4-71, 4-73
1487948-0000	.BUSHING	4-51, 4-53, 4-55, 4-57, 4-59, 4-65, 4-67, 4-69, 4-71, 4-73
1487954-0000	.CUTTING JAW	4-155, 4-157, 4-159, 4-161
1487955-0000	.HOLDER	4-129, 4-131, 4-133, 4-187, 4-189, 4-191
1487995-0000	.HATCH	8-275, 8-277
1488000-0000	.DOOR	8-293
1488005-0000	.BEARING BLOCK	8-111, 8-113
1488007-0000	.WASHER	8-285
1490032-0000	.PUSHER	5-231, 5-233, 5-235, 5-237, 5-239, 5-241
1490033-0000	.SLIDE	5-67, 5-69, 5-71, 5-73, 5-75, 5-153, 5-155
1490034-0000	.SLIDE	5-67, 5-69, 5-71, 5-73, 5-75, 5-161, 5-163
1490035-0000	.BAR	5-67, 5-69, 5-71, 5-73, 5-75, 5-153, 5-155
1490036-0000	.BAR	5-67, 5-69, 5-71, 5-73, 5-75, 5-161, 5-163
1490039-0000	.NOZZLE	5-199, 5-201, 5-203, 5-205, 5-207, 5-209
1490046-0000	.PIN	1-333, 1-335, 2-63
1490085-0000	.GEAR BOX	5-283
1490183-0000	.BRACKET	8-251, 8-253
1490187-0000	.ROCKER ARM	8-135
1490188-0100	.COVER	8-257, 8-259, 8-261, 8-263
1490190-0200	.HATCH	8-257, 8-259, 8-261, 8-263
1490191-0100	.DOOR	8-257, 8-259, 8-261, 8-263
1490193-0100	.COVER	8-257, 8-259, 8-261, 8-263
1490210-0000	.PLATE	8-129
1490215-0200	.COVERING PANEL	8-3, 8-5, 8-7, 8-9
1490219-0000	.BRACKET	8-129
1490220-0000	.ANGLE BRACKET	8-171, 8-173
1490226-0000	.FILTER	8-281, 8-283, 8-293
1490442-0000	.STUD SCREW 8X20	5-283
1490713-0000	.SPRING HOLDER	1-141
1490714-0000	.GUIDE	1-141
1490715-0000	.DOLLY	1-141
1490762-0000	.ROLLER	1-61, 1-63, 1-65, 1-67, 1-69, 1-117, 1-119
1490763-0000	.ROLLER	1-31, 1-33
1490765-0000	.ROLLER	1-75, 1-77, 1-79
1490804-0000	.HOLDER	8-139
1490806-0200	.HEATING DEVICE	8-133
1490809-0000	.ARM	8-183, 8-193
1490810-0000	.ARM	8-183, 8-193
1490812-0000	.AXLE	8-183, 8-193
1490813-0000	.SCREW	8-183, 8-193
1490814-0000	.PLATE	8-241
1490815-0000	.PLATE	8-241
1490818-0000	.ARM	8-135
1490820-0000	.SHAFT	8-161
1490821-0000	.ANGLE PIECE	8-179, 8-181, 8-189, 8-191
1490831-0200	.MAGAZINE	8-3, 8-5, 8-7, 8-9
1490950-0000	.SPLASH PLATE	2-25
1490962-0000	.LID	1-229
1490963-0000	.PIPE	1-225
1490994-0100	.LINK	3-5, 3-29
1494664-0000	.AXLE LINK	8-171, 8-173
1498029-0000	.PIN	5-231, 5-233, 5-235, 5-237, 5-239, 5-241, 6-51, 6-53
1498047-0000	.SEALING BLOCK	8-139, 10-9
1498064-0000	.BLOCK	5-285
1498066-0000	.SCREW	5-285
1498067-0000	.PLATE	5-285
1498068-0000	.SEAL RING	5-307, 5-313, 5-315
1498077-0000	.GASKET	6-43, 6-45
1498117-0000	.TEMPLATE	11-27
1498121-0000	.BASE PLATE	1-333, 1-335
1498122-0000	.BRACKET	1-333, 1-335
1498130-0000	.PLATE	1-175, 1-177
1498131-0000	.BRACKET	1-175, 1-177
1498132-0000	.SHAFT	1-175, 1-177, 1-193, 1-195

Part No	Description	Page No
1498134-0000	.PLATE	1-175, 1-177
1498143-0000	.LOCK RING	1-245, 1-247, 1-249, 1-251
1498146-0000	.NOZZLE	5-199, 5-201, 5-203, 5-205, 5-207, 5-209
1498147-0000	.NOZZLE	5-199, 5-201, 5-203, 5-205, 5-207, 5-209
1498149-0000	.TEMPLATE	10-37
1498150-0000	.TEMPLATE	10-37
1498151-0000	.TEMPLATE	10-37
1498161-0000	.SUPPORT	5-41, 5-43, 5-105, 5-107
1498163-0000	.SPACER	5-199, 5-201, 5-203, 5-205, 5-207, 5-209
1498430-0000	.ROD	8-17
1498445-0000	.COVER	8-133
1498450-0001	.PLATE	8-143
1498451-0001	.SHAFT	8-143
1498453-0200	.DOOR	8-257, 8-259, 8-261, 8-263
1498454-0200	.DOOR	8-257, 8-259, 8-261, 8-263
1498457-0000	.BRACKET	8-127
1498459-0001	.GLASS PANE	8-303, 8-307
1498459-0002	.GLASS PANE	8-293
1498459-0003	.GLASS PANE	8-275, 8-277, 8-297, 8-299
1498459-0004	.GLASS PANE	8-295
1498460-0000	.HATCH	8-297, 8-299
1498461-0001	.SEALING STRIP	8-303
1498461-0002	.SEALING STRIP	8-275, 8-277, 8-297, 8-299
1498461-0005	.SEALING STRIP	8-293, 8-295
1498526-0000	.REGULATOR BODY	1-287
1498528-0000	.TIMING BELT	5-283
1498529-0000	.TIMING BELT	5-283
1498620-0000	.PULLEY	5-283
1498782-0000	.TANK BRACKET	1-333, 1-335
1498783-0000	.WHEEL	1-161, 1-163
1498787-0000	.BRACKET	1-333, 1-335
1498790-0000	.SHAFT	1-175, 1-177
1498827-0000	.FOLDING BAR	5-51, 5-53, 5-55
1498828-0000	.FOLDING BAR	5-51, 5-53, 5-55
1498849-0000	.BUSBAR	4-129, 4-131, 4-133
1498850-0000	.BUSBAR	4-187, 4-189, 4-191
1498855-0000	.GASKET	2-125
1498856-0000	.FLANGE	2-125
1498857-0000	.CONNECTION	2-125
1498858-0000	.FLANGE	2-125
1498929-0000	.SPRING	5-213, 5-215, 5-217, 5-219, 5-221, 5-223
1498999-0000	.CLAMP	6-43, 6-45
1499043-0000	.BRACKET	5-283
1499059-0000	.TIMING BELT	5-283
1499064-0000	.PULLEY	5-283
1499071-0000	.SPACER	5-41, 5-43, 5-51, 5-53, 5-55, 5-105, 5-107
1499072-0000	.SPACER	5-51, 5-53, 5-55
1499092-0000	.INSERT	6-43, 6-45
1499094-0000	.SPACER SCREW	5-51, 5-53, 5-55
1499103-0000	.TIE ROD	5-13, 5-15
1499114-0000	.LOCK RING	1-245, 1-247, 1-249, 1-251
1499135-0000	.GUIDE	5-67, 5-69, 5-71, 5-73, 5-75
1499136-0000	.GUIDE	5-67, 5-69, 5-71, 5-73, 5-75
1499139-0000	.BLOCK	5-5, 5-7
1499140-0000	.SPACER	5-65
1499141-0000	.FLAP	5-29, 5-31
1499142-0000	.FLAP	5-29, 5-31
1499143-0000	.PLATE	5-231, 5-233, 5-235, 5-237, 5-239, 5-241
1499144-0000	.PUSHER	5-231, 5-233, 5-235, 5-237, 5-239, 5-241
1499150-0000	.RAIL	5-51, 5-53, 5-55, 5-115, 5-117, 5-119
1499151-0000	.RAIL	5-51, 5-53, 5-55, 5-115, 5-117, 5-119
1499156-0000	.PIPE	1-319
1499157-0000	.HEATING PIPE	1-229
1499158-0100	.AIR SUPER-HEATER	1-203, 1-205
1499160-0200	.SCRUBBER	1-203, 1-205
1499166-0000	.PIPE	1-317
1499168-0000	.LID	1-161, 1-163
1499169-0000	.GASKET	1-161, 1-163
1499170-0000	.GASKET	1-161, 1-163
1499171-0000	.LID	1-161, 1-163
1499172-0000	.UPPER SECTION	1-235
1499320-0000	.TIE ROD	4-143, 4-145, 4-199, 4-201
1499327-0000	.SHAFT	4-51, 4-53, 4-55, 4-57, 4-59, 4-65, 4-67, 4-69, 4-71, 4-73
1499328-0000	.STOPPER	4-51, 4-53, 4-55, 4-57, 4-59, 4-65, 4-67, 4-69, 4-71, 4-73
1499345-0000	.FLAP HOLDER	4-51, 4-53, 4-55, 4-57, 4-59
1499350-0000	.CAM	4-51, 4-53, 4-55, 4-57, 4-59, 4-65, 4-67, 4-69, 4-71, 4-73
1499351-0200	.ROLLER UNIT	4-223, 4-225
1499355-0000	.ROLLER	4-51, 4-53, 4-55, 4-57, 4-59, 4-65, 4-67, 4-69, 4-71, 4-73
1499356-0000	.CAM	4-51, 4-53, 4-55, 4-57, 4-59, 4-65, 4-67, 4-69, 4-71, 4-73
1499358-0000	.VOLUME FLAP	4-51, 4-53, 4-55, 4-57, 4-59, 4-65, 4-67, 4-69, 4-71, 4-73
1499400-0000	.GUIDE	5-67, 5-69, 5-71, 5-73, 5-75
1499401-0000	.GUIDE	5-67, 5-69, 5-71, 5-73, 5-75
1499402-0000	.SPACER	5-51, 5-53, 5-55
1499411-0000	.COUNTER ROLLER	1-75, 1-77, 1-79

Part No	Description	Page No
1499417-0000	.BAR	5-67, 5-69, 5-71, 5-73, 5-75
1499418-0000	.SLIDE	5-67, 5-69, 5-71, 5-73, 5-75
1499422-0000	.SLIDE	5-67, 5-69, 5-71, 5-73, 5-75
1499423-0000	.BAR	5-67, 5-69, 5-71, 5-73, 5-75
1499426-0000	.GUIDE	5-67, 5-69, 5-71, 5-73, 5-75
1499427-0000	.GUIDE	5-67, 5-69, 5-71, 5-73, 5-75
1499444-0000	.NOZZLE	5-199, 5-201, 5-203, 5-205, 5-207, 5-209
1499445-0000	.NOZZLE	5-199, 5-201, 5-203, 5-205, 5-207, 5-209
1499446-0000	.NOZZLE	5-199, 5-201, 5-203, 5-205, 5-207, 5-209
1499475-0000	.HOLDER	5-67, 5-69, 5-71, 5-73, 5-75, 5-145, 5-147, 5-149
1499476-0000	.HOLDER	5-67, 5-69, 5-71, 5-73, 5-75, 5-145, 5-147, 5-149, 5-309, 5-311, 5-317
1499562-0003	.LOCKING ARM	8-293, 8-295
1499562-0004	.LOCKING ARM	8-293, 8-295
1499564-0100	.COVER	8-257, 8-259, 8-261, 8-263
1499566-0000	.WASHER	8-171, 8-173
1499568-0000	.HATCH	8-309
1499569-0000	.BRACKET	8-135
1499570-0000	.HOLDER	8-111, 8-113
1499573-0000	.PIN	8-129
1499577-0000	.ARM	8-189, 8-191
1499578-0300	.CABLE CONDUIT	8-149, 8-151
1499579-0000	.SEALING STRIP	8-307
1499582-0000	.AXLE PIN	8-179, 8-181, 8-189, 8-191
1499584-0000	.AXLE PIN	8-125, 8-241, 8-249
1499588-0000	.BENDING ROLLER	8-179, 8-181, 8-189, 8-191
1499594-0000	.VOLUME CAM	4-231, 4-233, 4-235, 4-237
1499635-0000	.LEVER	5-5, 5-7
1499636-0000	.ROLLER	1-75, 1-77, 1-79
1499642-0201	.TPIH GENERATOR	9-87
1499675-0000	.VOLUME BULGE	4-7, 4-9, 4-11, 4-17, 4-19, 4-21
1499678-0000	.ROLLER	4-243, 4-245
1499726-0000	.PLASTIC HOSE	1-319
1499735-0000	.RAILING	1-337
1499765-0000	.AXLE LINK	5-13, 5-15
1499786-0000	.BRACKET	7-41, 7-43
1499901-0000	.VOLUME FLAP	4-7, 4-9, 4-11
1499902-0000	.VOLUME FLAP	4-17, 4-19, 4-21
1511067-0000	.CARRIER RULER	4-165, 4-167
1511188-0000	.CARRIER RULER	4-211, 4-213, 4-215, 4-217
1511195-0000	.SHAFT	3-21
1511203-0000	.PIPE	2-69, 2-71
1511250-0000	.VOLUME FLAP	4-7, 4-9, 4-11
1511251-0000	.VOLUME FLAP	4-17, 4-19, 4-21
1511253-0000	.VOLUME SHIM	4-7, 4-9, 4-11, 4-17, 4-19, 4-21, 10-15, 10-17, 10-19, 10-21, 10-23, 10-25
1511254-0000	.BUSHING	4-7, 4-9, 4-11, 4-17, 4-19, 4-21
1511336-0000	.VOLUME SHIM	10-15, 10-17, 10-19, 10-21, 10-23, 10-25
1511337-0000	.VOLUME SHIM	4-51, 4-53, 4-55, 4-57, 4-59, 4-65, 4-67, 4-69, 4-71, 4-73, 10-15, 10-17, 10-19, 10-21, 10-23, 10-25
1511339-0000	.STOP	4-51, 4-53, 4-55, 4-57, 4-59, 4-65, 4-67, 4-69, 4-71, 4-73
1511351-0000	.FOLDING FLAP	4-165, 4-167, 4-211, 4-213, 4-215, 4-217
1511352-0000	.FOLDING FLAP	4-165, 4-167, 4-211, 4-213, 4-215, 4-217
1511492-0000	.SHAFT	1-71, 1-73
1511497-0000	.CONTAINER	1-317
1511503-0000	.PIPE	1-221
1511504-0000	.SPACER	1-331
1511512-0000	.BEARING BUSHING	1-199
1511556-0000	.SET SCREW	4-27, 4-29, 4-39, 4-41
1511558-0000	.BOTTOM	5-29, 5-31, 5-77, 5-79
1511564-0000	.BRACKET	8-251, 8-253
1511568-0000	.PIN	8-179, 8-181, 8-189, 8-191
1511569-0000	.SPACER	8-187, 8-195
1511575-0000	.ARM	8-179, 8-181
1511579-0000	.BRACKET	8-251, 8-253
1511585-0200	.STRIP GUIDE	8-133
1511586-0001	.BAR	8-143
1511600-0000	.SPACER	1-287
1511615-0000	.BRACKET	7-23
1511616-0000	.BRACKET	7-23
1511680-0000	.TUBE	7-23
1511692-0000	.SPACER	5-199, 5-201, 5-203, 5-205, 5-207, 5-209
1511697-0000	.FOLDING FLAP	4-165, 4-167, 4-211, 4-213, 4-215, 4-217
1511698-0000	.FOLDING FLAP	4-165, 4-167, 4-211, 4-213, 4-215, 4-217
1511699-0000	.FOLDING FLAP	4-165, 4-167, 4-211, 4-213, 4-215, 4-217
1511700-0000	.FOLDING FLAP	4-165, 4-167, 4-211, 4-213, 4-215, 4-217
1511740-0000	.CARRIER	1-165, 1-167, 1-169
1511755-0000	.NET	1-221
1511759-0000	.SPRING	1-321, 1-323
1511769-0000	.ROLLER	1-171, 1-173, 1-175, 1-177
1512114-0000	.COVER	6-43, 6-45
1512115-0000	.GASKET	6-43, 6-45
1512116-0000	.COVER	6-43, 6-45
1512145-0000	.LID	2-343, 2-345
1512146-0000	.AXLE PIN	4-51, 4-53, 4-55, 4-57, 4-59, 4-65, 4-67, 4-69, 4-71, 4-73
1512147-0000	.WASHER	4-51, 4-53, 4-55, 4-57, 4-59, 4-65, 4-67, 4-69, 4-71, 4-73

Part No	Description	Page No
1512267-0000	.ECCENTRIC BUSHING	8-157, 8-159
1512275-0000	.PROTECTION PLATE	8-129
1512276-0000	.PROTECTION PLATE	8-179, 8-181, 8-189, 8-191
1512278-0000	.SEALING STRIP	8-309
1512279-0200	.MACHINE BODY	8-111, 8-113
1512307-0000	.GUIDE	5-67, 5-69, 5-71, 5-73, 5-75
1512308-0000	.GUIDE	5-67, 5-69, 5-71, 5-73, 5-75
1512315-0000	.ARM RIGHT	4-279, 4-281, 4-283, 10-53
1512316-0000	.ARM LEFT	4-267, 4-269, 4-271, 10-53
1512322-0000	.COPPER BRAID	9-77, 9-79, 9-81, 9-83, 9-85, 9-97, 9-99
1512324-0000	.CURVE	4-231, 4-233, 4-235, 4-237
1512325-0000	.VOLUME CAM	4-231, 4-233, 4-235, 4-237
1512339-0100	.PHOTOCELL OUTFEED	5-247, 5-249, 5-251, 6-59
1512363-0000	.BEARING HOUSING	8-99, 8-101
1512405-0000	.NUT	1-325
1512413-0200	.CONTROL PANEL	8-281, 8-283
1512414-0000	.SEALING STRIP	8-281, 8-283
1512420-0000	.PLATE	8-111, 8-113
1512421-0000	.CABLE DUCT	8-131
1512423-0000	.CABLE DUCT	8-131
1512425-0000	.CABLE DUCT	8-131
1512426-0000	.CABLE DUCT	8-131
1512428-0200	.MOUNTING SHEET	8-133
1512429-0200	.PRESSURE ROLLER	8-241
1512430-0000	.VOLUME SHIM	8-171, 8-173
1512463-0000	.THERMOCOUPLE	6-43, 6-45
1512484-0000	.ROLLER	4-243, 4-245
1512526-0000	.STEERING	8-75, 8-155
1512563-0200	.PRESSURE JAW LEFT	4-5
1512564-0200	.CARRIER CUTTING LEFT	4-5
1512565-0300	.CUTTING JAW LEFT	4-5
1512568-0200	.PRESSURE JAW RIGHT	4-5
1512569-0200	.CARRIER CUTTING RIGHT	4-5
1512570-0300	.CUTTING JAW RIGHT	4-5
1512579-0000	.BRACKET	4-27, 4-29, 4-39, 4-41
1512998-0000	.FOLDING FLAP CAM	4-295, 4-297
1517087-0000	.HINGE	8-135
1517088-0200	.CONTROL PANEL	8-303
1517101-0000	.PIPE	8-111, 8-113
1517105-0000	.PLATE	8-245
1517107-0000	.PROTECTION	8-133
1517134-0100	.COMPRESSOR UNIT	1-203, 1-205
1517135-0000	.FRONT PLATE	1-207
1517136-0000	.COVER	1-207
1517137-0000	.COVER	1-207
1517138-0000	.COVER	1-207
1517242-0000	.GUIDE	5-67, 5-69, 5-71, 5-73, 5-75
1517243-0000	.GUIDE	5-67, 5-69, 5-71, 5-73, 5-75
1517295-0000	.SHEET	7-77
1517298-0250	.INFEED CONVEYOR	5-3
1517299-0250	.INFEED CONVEYOR LONG	5-305
1517300-0350	.INFEED CONVEYOR SHORT	5-305
1517302-0000	.SUPPORT PLATE	5-279, 5-281
1517348-0000	.HOSE	4-299
1517472-0000	.SIDE PLATE	5-301, 5-303, 6-5, 6-7
1517473-0000	.SIDE PLATE	5-301, 5-303, 6-5, 6-7
1517474-0000	.GUIDE	5-67, 5-69, 5-71, 5-73, 5-75
1517475-0000	.GUIDE	5-67, 5-69, 5-71, 5-73, 5-75
1517476-0000	.WEDGE	5-67, 5-69, 5-71, 5-73, 5-75, 5-145, 5-147, 5-149
1517477-0000	.PLATE	5-67, 5-69, 5-71, 5-73, 5-75, 5-145, 5-147, 5-149
1517478-0000	.BAR	5-67, 5-69, 5-71, 5-73, 5-75
1517479-0000	.BAR	5-67, 5-69, 5-71, 5-73, 5-75
1517480-0000	.SLIDE	5-67, 5-69, 5-71, 5-73, 5-75
1517481-0000	.SLIDE	5-67, 5-69, 5-71, 5-73, 5-75
1517482-0000	.TUBE	1-221
1517524-0000	.GUIDE	5-67, 5-69, 5-71, 5-73, 5-75
1517525-0000	.GUIDE	5-67, 5-69, 5-71, 5-73, 5-75
1517526-0000	.GUIDE	5-67, 5-69, 5-71, 5-73, 5-75, 5-153, 5-155
1517527-0000	.GUIDE	5-67, 5-69, 5-71, 5-73, 5-75, 5-161, 5-163
1517563-0000	.BRACKET	5-279, 5-281
1517567-0000	.PLATE	5-279, 5-281
1517707-0000	.BRACKET	1-315
1517751-0000	.SHAFT	8-145
1517987-0000	.TEMPLATE	10-37
1519089-0000	.GUIDE	5-67, 5-69, 5-71, 5-73, 5-75
1519090-0000	.GUIDE	5-67, 5-69, 5-71, 5-73, 5-75
1519093-0000	.GUIDE	5-67, 5-69, 5-71, 5-73, 5-75
1519094-0000	.GUIDE	5-67, 5-69, 5-71, 5-73, 5-75
1519150-0000	.PIN	1-15, 1-17
1519156-0000	.AIR DISTRIBUTOR	1-193, 1-195
1519158-0000	.LID	1-193, 1-195
1519159-0000	.BUSHING	1-193, 1-195
1519160-0000	.SHAFT	1-193, 1-195
1519163-0000	.ARM	1-193, 1-195

Part No	Description	Page No
1519166-0000	.BUSHING	1-193, 1-195
1519205-0000	.BUSHING	6-43, 6-45
1519206-0000	.SUPPORT	6-43, 6-45
1519336-0000	.NOZZLE	5-199, 5-201, 5-203, 5-205, 5-207, 5-209
1519338-0000	.TIMING BELT	5-67, 5-69, 5-71, 5-73, 5-75, 5-145, 5-147, 5-149
1519339-0000	.SPACER	5-199, 5-201, 5-203, 5-205, 5-207, 5-209
1519341-0000	.BLOCK	5-5, 5-7
1519344-0000	.CARRIER	5-67, 5-69, 5-71, 5-73, 5-75, 5-145, 5-147, 5-149
1519345-0000	.GUIDE	5-67, 5-69, 5-71, 5-73, 5-75, 5-145, 5-147, 5-149
1519346-0000	.GUIDE	5-67, 5-69, 5-71, 5-73, 5-75, 5-145, 5-147, 5-149
1519355-0000	.SPACER	5-51, 5-53, 5-55, 5-115, 5-117, 5-119
1519358-0000	.GUIDE	5-41, 5-43
1519359-0000	.GUIDE	5-41, 5-43
1519486-0000	.FILTER HOUSING	1-263, 1-351
1519578-0000	.MOUNTING BLOCK	8-171, 8-173
1519580-0000	.GUIDE FINGER	8-169
1519581-0000	.ROLLER BAR	8-241, 8-255
1519583-0000	.BRACKET	8-157, 8-159
1519586-0000	.BRACKET	8-241
1519588-0000	.PROTECTION PLATE	8-111, 8-113
1519589-0100	.HANDLE	8-189, 8-191
1519591-0000	.RAIL PIN	8-171, 8-173
1519592-0000	.BOW	8-241, 8-255
1519599-0100	.ROOF	8-257, 8-259, 8-261, 8-263
1519600-0000	.COVER PLATE	8-269
1519769-0000	.FOLDING BAR	5-51, 5-53, 5-55
1519770-0000	.FOLDING BAR	5-51, 5-53, 5-55
1519789-0000	.BRACKET	1-387, 1-389
1519790-0000	.PLATE	1-387, 1-389
1519799-0000	.ANGLE BRACKET	1-141
1519811-0000	.SHAFT	4-103, 4-109, 4-113
1519942-0000	.PLATE	8-251, 8-253
1519944-0000	.BRACKET	8-171, 8-173
1519947-0100	.MIMIC PANEL	8-281, 8-283
1519950-0000	.HOLDER	8-269
1519955-0000	.WASHER	8-167
1519960-0000	.SPACER	8-241
1519967-0000	.CLAMP	8-167
1520167-0000	.INDUCTOR	4-129, 4-131, 4-133, 4-187, 4-189, 4-191, 10-15, 10-17, 10-19, 10-21, 10-23, 10-25
1520455-0000	.CUTTING RAIL	4-155, 4-157, 4-159, 4-161
1520493-0000	.CUTTING RAIL	4-155, 4-157, 4-159, 4-161
1520494-0000	.CUTTING RAIL	4-155, 4-157, 4-159, 4-161
1520633-0002	.DOLLY	4-155, 4-157, 4-159, 4-161, 10-15, 10-17, 10-19, 10-21, 10-23, 10-25, 11-67
1520633-0005	.DOLLY	4-155, 4-157, 4-159, 4-161, 10-15, 10-17, 10-19, 10-21, 10-23, 10-25
1523091-0000	.TEMPLATE	11-27
1523146-0000	.FOLDING FLAP	4-165, 4-167, 4-211, 4-213, 4-215, 4-217
1523147-0000	.FOLDING FLAP	4-165, 4-167, 4-211, 4-213, 4-215, 4-217
1523148-0000	.CARRIER RULER	4-211, 4-213, 4-215, 4-217
1523154-0003	.SPRAY NOZZLE	1-285
1523154-0004	.SPRAY NOZZLE	1-285
1523154-0005	.SPRAY NOZZLE	1-285
1523154-0006	.SPRAY NOZZLE	1-285
1523162-0000	.SCREW	4-143, 4-145, 4-199, 4-201
1523177-0000	.CARRIER RULER	4-165, 4-167
1523185-0000	.AXLE PIN	1-191
1523190-0000	.SHAFT	1-165, 1-167, 1-169
1523191-0000	.SHAFT	1-165, 1-167, 1-169
1523216-0200	.LEVEL CONTROL DEVICE	2-93
1523467-0000	.VOLUME BULGE	5-29, 5-31, 5-243, 5-245
1523475-0000	.CANTILEVER	4-27, 4-29, 4-39, 4-41
1523483-0000	.ROLLER	8-99, 8-101, 8-107, 8-109
1523486-0000	.SPACER	8-107, 8-109
1523490-0000	.VOLUME BULGE	4-231, 4-233, 4-235, 4-237
1523497-0000	.SPACER	5-199, 5-201, 5-203, 5-205, 5-207, 5-209
1523498-0000	.SPACER	5-41, 5-43
1523641-0000	.SPACER	2-243, 2-245, 2-247
1523645-0000	.AIR NOZZLE	2-243, 2-245, 2-247
1523664-0001	.ROLLER (STANDARD SIZE)	1-31, 1-33
1523665-0001	.ROLLER (STANDARD SIZE)	1-31, 1-33
1523680-0000	.PIPE	1-143, 1-145
1523685-0000	.IMPELLER	1-147
1523686-0000	.LID	1-147
1523687-0000	.PUMP BODY	1-147
1523691-0100	.BLOWING DEVICE	1-143, 1-145
1523696-0000	.GUIDE	1-61, 1-63, 1-65, 1-67, 1-69
1523777-0100	.STAIR CASE	2-201, 2-203, 2-205, 2-207, 2-209, 2-211
1523784-0000	.TOE PLATE	2-229
1523793-0000	.TOE PLATE	2-221, 2-223
1523805-0000	.PIN	1-321, 1-323
1523808-0000	.GASKET	1-319
1523818-0000	.BRACKET	1-355, 1-357
1523819-0000	.BRACKET	1-355, 1-357
1523820-0000	.BRACKET	1-355, 1-357
1523826-0000	.PUSHER	5-231, 5-233, 5-235, 5-237, 5-239, 5-241

Part No	Description	Page No
1523926-0000	.SPACER	5-41, 5-43, 5-51, 5-53, 5-55
1523927-0000	.SPACER SCREW	5-51, 5-53, 5-55
1524035-0000	.VOLUME BULGE	4-7, 4-9, 4-11, 4-17, 4-19, 4-21, 5-29, 5-31
1524151-0000	.ROLLER	1-87, 1-89, 1-91, 1-93
1524156-0000	.ROLLER	1-75, 1-77, 1-79
1524167-0000	.CORNER STRIP	2-215, 2-217, 2-221, 2-223, 2-231, 2-233
1524168-0000	.CORNER STRIP	2-215, 2-217, 2-221, 2-223
1524171-0000	.FRAME	2-231, 2-233
1524172-0000	.CHECKER PLATE	2-231, 2-233
1524173-0000	.CHECKER PLATE	2-231, 2-233
1524174-0000	.HOOK	2-231, 2-233
1524175-0000	.LEG	2-231, 2-233
1524176-0000	.CLAMP	2-231, 2-233
1524177-0000	.TOE PLATE	2-231, 2-233
1524179-0000	.TOE PLATE	2-231, 2-233
1524180-0000	.TOE PLATE	2-231, 2-233
1524181-0000	.PIN	2-231, 2-233
1524182-0000	.RAILING	2-231, 2-233
1524185-0000	.EXTENSION PIECE	2-231, 2-233, 2-235
1524186-0000	.PROFILE	2-235
1524187-0000	.PROFILE	2-235
1524188-0000	.STAIR	2-235
1524190-0000	.BRACKET	2-235
1524191-0000	.RIM	2-235
1524192-0000	.RAILING	2-235
1524193-0000	.RAILING	2-235
1524233-0000	.PIPE	1-355, 1-357
1524234-0000	.PIPE	1-355, 1-357
1524236-0000	.VALVE HOUSING	1-223
1524237-0000	.PIPE	1-355, 1-357
1524239-0000	.PIPE	1-355, 1-357
1524242-0000	.PIPE	1-355, 1-357
1524243-0000	.PIPE	1-355, 1-357
1524310-0000	.VOLUME BULGE	4-51, 4-53, 4-55, 4-57, 4-59, 4-65, 4-67, 4-69, 4-71, 4-73
1524375-0000	.BRACKET	8-75
1524394-0100	.CYLINDER	8-179, 8-181
1524398-0100	.HANDLE	8-179, 8-181
1524404-0100	.COVER	8-257, 8-259, 8-261, 8-263
1524405-0000	.COVER PLATE	8-267
1524406-0000	.SEALING STRIP	8-267
1524414-0000	.SEAL	1-117, 1-119
1524416-0000	.ROLLER	1-117, 1-119
1524421-0000	.ROLLER	4-243, 4-245
1524477-0200	.CUTTING TABLE	8-133
1524481-0000	.SEALING BLOCK	8-145
1524484-0000	.FLAP	5-29, 5-31
1524547-0000	.COUNTER ROLLER	1-75, 1-77, 1-79
1524731-0300	.BRACKET	8-241
1524732-0200	.DRIVE UNIT	8-241
1524840-0000	.TEMPLATE	10-37
1524841-0000	.TEMPLATE	10-37
1524854-0000	.BEAM	2-221, 2-223
1524864-0000	.RAILING	2-231, 2-233
1524870-0000	.RAILING	2-229
1528549-0000	.PIPE	11-83
1528552-0000	.PLATFORM	2-213
1528553-0000	.PLATFORM	2-213
1528639-0000	.GASKET	1-321, 1-323
1528715-0000	.BRACKET	11-83
1528727-0000	.PIPE	1-355, 1-357
1528728-0000	.PIPE	1-355, 1-357
1528746-0100	.GUIDE	1-131, 1-133
1528747-0000	.PLATE	11-83
1528838-0000	.CLAMP	11-17
1528839-0000	.SLEEVE	11-17
1528840-0000	.LEVER	11-17
1528841-0000	.HOLDER	11-17
1528842-0000	.PIN	11-17
1528847-0100	.PLATFORM	2-201, 2-203, 2-205, 2-207, 2-209, 2-211
1528848-0100	.PLATFORM	2-201, 2-203, 2-205, 2-207, 2-209, 2-211
1528849-0000	.RAILING	2-215, 2-217
1528850-0000	.CHECKER PLATE	2-213
1528855-0000	.CHECKER PLATE	2-213
1528856-0000	.TOE PLATE	2-213
1528857-0000	.TOE PLATE	2-215, 2-217
1528858-0000	.RAILING	2-213
1528859-0000	.RAILING	2-215, 2-217
1528866-0000	.CHECKER PLATE	2-213
1528867-0000	.TOE PLATE	2-213
1528868-0000	.CHECKER PLATE	2-215, 2-217
1528870-0000	.CHECKER PLATE	2-215, 2-217
1528871-0000	.TOE PLATE	2-215, 2-217
1528872-0000	.TOE PLATE	2-215, 2-217
1528873-0000	.RAILING	2-215, 2-217

Part No	Description	Page No
1528874-0000	.RAILING	2-213
1528887-0000	.TORSION SPRING	11-17
1532223-0000	.BLOCK	1-351
1532231-0000	.CONNECTION	1-193, 1-195
1532236-0000	.CONNECTION BOX	1-327
1532237-0000	.RAIL	1-261, 1-329
1532238-0100	.TERMINAL BLOCK	1-327
1532239-0100	.CONNECTION BOX	1-313
1532240-0000	.BRACKET	1-327
1532249-0000	.WHEEL	1-165, 1-167, 1-169
1532250-0100	.HEAT EXCHANGER VALVE	1-203, 1-205
1532254-0000	.SPACER	5-65
1532256-0000	.CARRIER	5-67, 5-69, 5-71, 5-73, 5-75
1532257-0000	.SLIDE	5-67, 5-69, 5-71, 5-73, 5-75
1532258-0000	.SLIDE	5-67, 5-69, 5-71, 5-73, 5-75
1532261-0000	.GUIDE	5-67, 5-69, 5-71, 5-73, 5-75
1532262-0000	.GUIDE	5-67, 5-69, 5-71, 5-73, 5-75
1532263-0000	.GUIDE	5-67, 5-69, 5-71, 5-73, 5-75
1532264-0000	.GUIDE	5-67, 5-69, 5-71, 5-73, 5-75
1532266-0000	.BLOCK	5-5, 5-7
1532267-0000	.SUPPORT	5-13, 5-15
1532268-0000	.AXLE LINK	5-13, 5-15
1532269-0000	.TIE ROD	5-13, 5-15
1532270-0000	.SUPPORT	5-13, 5-15
1532275-0000	.FOLDING BAR	5-51, 5-53, 5-55
1532276-0000	.FOLDING BAR	5-51, 5-53, 5-55
1532280-0000	.RAIL	5-51, 5-53, 5-55
1532281-0000	.RAIL	5-51, 5-53, 5-55
1532284-0000	.NOZZLE	5-199, 5-201, 5-203, 5-205, 5-207, 5-209
1532285-0000	.NOZZLE	5-199, 5-201, 5-203, 5-205, 5-207, 5-209
1532286-0000	.NOZZLE	5-199, 5-201, 5-203, 5-205, 5-207, 5-209
1532287-0000	.VOLUME FLAP	4-7, 4-9, 4-11, 4-17, 4-19, 4-21
1532289-0000	.PUSHER	5-231, 5-233, 5-235, 5-237, 5-239, 5-241
1532290-0000	.PUSHER	5-231, 5-233, 5-235, 5-237, 5-239, 5-241
1532291-0000	.PLATE	5-231, 5-233, 5-235, 5-237, 5-239, 5-241
1532293-0000	.VOLUME SHIM	4-7, 4-9, 4-11, 4-17, 4-19, 4-21
1532297-0000	.FLAP	5-29, 5-31
1532298-0000	.FLAP	5-29, 5-31
1532299-0000	.TEMPLATE	10-37
1532459-0100	.SETTING TOOL	11-47
1532466-0000	.BRACKET	11-49
1532901-0100	.PLINTH	9-149, 9-151
1532902-0250	.CABINET	9-3, 9-5
1532904-0100	.DOOR	9-49, 9-51
1532905-0000	.PLATE	9-75
1532906-0100	.RACK	9-149, 9-151
1532908-0250	.CONTROL BOARD LEFT	9-3, 9-5
1532909-0000	.PLATE	9-49, 9-51
1532911-0000	.FASTENING PLATE	9-49, 9-51
1532912-0000	.FRAME	9-87
1532920-0100	.DOOR	9-49, 9-51
1532921-0000	.DOOR	9-63
1532923-0100	.DOOR	9-49, 9-51
1532924-0000	.DOOR	9-65
1532926-0000	.GASKET	9-49, 9-51
1532927-0000	.FASTENING PLATE	9-49, 9-51
1532928-0000	.COVERING PLATE	9-49, 9-51
1532929-0000	.COVERING PLATE	9-49, 9-51
1532930-0000	.PROTECTION	9-135, 9-137
1532932-0250	.DOOR	9-49, 9-51
1532933-0000	.DOOR	9-67
1532935-0100	.DOOR	9-49, 9-51
1532936-0000	.DOOR	9-69
1532998-0000	.TEMPLATE	11-27
1533046-0000	.INDUCTOR	4-129, 4-131, 4-133, 4-187, 4-189, 4-191, 10-15, 10-17, 10-19, 10-21, 10-23, 10-25
1533051-0000	.CUTTING RAIL	4-155, 4-157, 4-159, 4-161
1535036-0000	.PLATE	2-221, 2-223
1538049-0000	.PIPE	1-315
1538109-0000	.COMPRESSION SPRING	4-219, 10-15, 10-17, 10-19, 10-21, 10-23, 10-25
1538154-0000	.DRAIN PIPE	1-221
1538157-0000	.PIPE	1-227
1538158-0000	.PIPE	1-227
1538163-0000	.LEVER	1-191
1538166-0100	.AIR VALVE	1-203, 1-205
1538169-0000	.HOLDER	1-225
1538181-0000	.PIPE	1-221
1538183-0000	.PIPE	1-221
1538192-0000	.BRACKET	8-241
1538194-0000	.FINGER	8-145
1538202-0000	.AXLE PIN	8-135
1538234-0000	.SPACER	11-49
1538256-0000	.CARRIER RULER	4-165, 4-167
1538264-0000	.CURVE	4-231, 4-233, 4-235, 4-237
1538265-0000	.VOLUME CAM	4-231, 4-233, 4-235, 4-237

Part No	Description	Page No
1538348-0000	.CATCH	4-155, 4-157, 4-159, 4-161
1538349-0000	.CATCH	4-127
1538474-0000	.PIPE	1-221
1538487-0000	.PIPE	1-221
1538494-0000	.LID	1-233
1538496-0000	.ROLLER	1-175, 1-177
1538502-0000	.PIPE	1-317
1538503-0000	.PIPE	1-315
1538521-0000	.BUSHING	4-27, 4-29, 4-39, 4-41, 4-93, 4-95, 4-97, 4-99, 4-103, 4-109, 4-113
1538637-0000	.VOLUME SHIM	4-51, 4-53, 4-55, 4-57, 4-59, 4-65, 4-67, 4-69, 4-71, 4-73, 10-15, 10-17, 10-19, 10-21, 10-23, 10-25
1538723-0000	.PIPE	1-315
1538724-0000	.BRACKET	1-315
1538725-0000	.WASHER	1-161, 1-163
1538726-0000	.BUSHING	1-161, 1-163
1538735-0000	.GASKET	1-321, 1-323
1538742-0000	.LID	1-321, 1-323
1538769-0000	.CARRIER RULER	4-211, 4-213, 4-215, 4-217
1538770-0000	.BOTTOM	5-29, 5-31
1538868-0000	.BRACKET	2-267, 2-269, 2-287, 2-307, 2-313, 2-317, 2-325, 2-329, 2-331, 2-333, 7-49, 7-77, 8-111, 8-113
1538890-0000	.RAIL	5-51, 5-53, 5-55
1538891-0000	.RAIL	5-51, 5-53, 5-55
1538952-0000	.FORK	1-245, 1-247, 1-249, 1-251
1538953-0000	.SHAFT	1-245, 1-247, 1-249, 1-251
1538963-0000	.RAIL	5-279, 5-281
1538970-0000	.SLIDE	5-259, 5-261, 5-263, 5-265, 5-267, 5-269
1539172-0000	.CANTILEVER	4-27, 4-29, 4-39, 4-41
1539174-0000	.BUSHING	1-11
1539175-0000	.PLATE	1-11
1539348-0000	.HOLDER	4-27, 4-29, 4-39, 4-41
1539387-0000	.SCREW	8-135
1539391-0000	.ROUND NUT	8-293, 8-303, 8-307
1539396-0000	.BOW CLAMP	8-241
1539397-0000	.ROLLER	8-255
1539454-0000	.GUIDE	1-61, 1-63, 1-65, 1-67, 1-69
1539727-0000	.WHEEL	1-321, 1-323
1539729-0000	.BRACKET	1-321, 1-323
1539740-0000	.BUSHING	1-223
1539741-0000	.COVER	1-223
1539742-0000	.SHUTTER	1-223
1539743-0000	.SHUTTER	1-223
1539744-0000	.BRACKET	1-223
1539745-0000	.LEVER	1-223
1539746-0250	.DOOR	1-131, 1-133
1539750-0000	.SHAFT	1-223
1539751-0000	.COVER	1-223
1539752-0000	.BRACKET	1-223
1539840-0000	.VOLUME BULGE	4-7, 4-9, 4-11, 4-17, 4-19, 4-21
1539841-0000	.VOLUME BULGE	4-7, 4-9, 4-11, 4-17, 4-19, 4-21
1539842-0000	.VOLUME SHIM	4-7, 4-9, 4-11, 4-17, 4-19, 4-21
1539843-0000	.VOLUME SHIM	4-7, 4-9, 4-11, 4-17, 4-19, 4-21, 10-15, 10-17, 10-19, 10-21, 10-23, 10-25
1539871-0000	.SPACER	5-41, 5-43, 5-51, 5-53, 5-55, 5-115, 5-117, 5-119
1539872-0000	.PUSHER	5-231, 5-233, 5-235, 5-237, 5-239, 5-241
1539873-0000	.SPACER	5-51, 5-53, 5-55
1539874-0000	.SLIDE	5-67, 5-69, 5-71, 5-73, 5-75, 5-153, 5-155
1539875-0000	.SLIDE	5-67, 5-69, 5-71, 5-73, 5-75, 5-161, 5-163
1539876-0000	.PLATE	5-67, 5-69, 5-71, 5-73, 5-75, 5-153, 5-155, 5-161, 5-163
1539877-0000	.BAR	5-67, 5-69, 5-71, 5-73, 5-75, 5-153, 5-155
1539878-0000	.BAR	5-67, 5-69, 5-71, 5-73, 5-75, 5-161, 5-163
1539879-0000	.GUIDE	5-67, 5-69, 5-71, 5-73, 5-75
1539880-0000	.GUIDE	5-67, 5-69, 5-71, 5-73, 5-75
1539881-0000	.FOLDING BAR	5-51, 5-53, 5-55
1539882-0000	.FOLDING BAR	5-51, 5-53, 5-55
1539886-0000	.CANTILEVER	4-27, 4-29, 4-39, 4-41
1539887-0000	.CATCH	4-27, 4-29, 4-39, 4-41
1539892-0000	.TEMPLATE	11-27
1539893-0000	.TEMPLATE	11-27
1539894-0000	.GUIDE	5-67, 5-69, 5-71, 5-73, 5-75, 5-153, 5-155
1539895-0000	.GUIDE	5-67, 5-69, 5-71, 5-73, 5-75, 5-161, 5-163
1539898-0000	.SPACER	5-41, 5-43, 5-51, 5-53, 5-55, 5-105, 5-107
1539900-0000	.RIGHT UPPER GUIDE	5-41, 5-43, 5-105, 5-107
1539902-0000	.VOLUME SHIM	4-7, 4-9, 4-11, 4-17, 4-19, 4-21, 10-15, 10-17, 10-19, 10-21, 10-23, 10-25
1539903-0000	.VOLUME BULGE	4-7, 4-9, 4-11, 4-17, 4-19, 4-21
1539904-0000	.VOLUME FLAP	4-7, 4-9, 4-11
1539983-0000	.GUIDE	5-67, 5-69, 5-71, 5-73, 5-75
1539984-0000	.GUIDE	5-67, 5-69, 5-71, 5-73, 5-75
1548001-0000	.SIGN	1-375
1548002-0000	.CAM	5-211
1548116-0000	.SPACER	9-149, 9-151
1548123-0150	.CONTROL BOARD RIGHT	9-3, 9-5
1548127-0250	.POWER SUPPLY UNIT	9-3, 9-5
1548129-0100	.RELAY UNIT 2	9-111, 9-113
1548133-0100	.PLINTH	9-123, 9-125

Part No	Description	Page No
1548134-0250	.PLINTH	9-135, 9-137
1548136-0150	.DOOR	9-3, 9-5
1548139-0000	.COVER PLATE	9-71, 9-73
1548199-0000	.WASHER	8-61
1548200-0000	.BRACKET	8-111, 8-113
1548210-0100	.LOCKING DEVICE	8-251, 8-253
1548211-0000	.RAILING	2-221, 2-223
1548230-0000	.BODY	1-287
1548348-0000	.GUIDE	5-259, 5-261, 5-263, 5-265, 5-267, 5-269
1548454-0000	.DISC	10-9
1548460-0101	.VOLUME FLAP	10-11, 10-13
1548460-0102	.VOLUME FLAP	10-11, 10-13
1548460-0103	.VOLUME FLAP	10-11, 10-13
1548460-0104	.VOLUME FLAP	10-11, 10-13
1548460-0105	.VOLUME FLAP	10-11, 10-13
1548460-0106	.VOLUME FLAP	10-11, 10-13
1548460-0107	.VOLUME FLAP	10-11, 10-13
1548460-0108	.VOLUME FLAP	10-11, 10-13
1548460-0109	.VOLUME FLAP	10-11, 10-13
1548460-0110	.VOLUME FLAP	10-11, 10-13
1548460-0111	.VOLUME FLAP	10-11, 10-13
1548460-0200	.VOLUME FLAP	4-5
1548460-0201	.VOLUME FLAP	10-11, 10-13
1548460-0202	.VOLUME FLAP	10-11, 10-13
1548491-0200	.ELECTRICAL CABINET	8-3, 8-5, 8-7, 8-9
1548492-0000	.ELECTRICAL CABINET	8-199, 8-201
1548496-0100	.TERMINAL	8-199, 8-201
1548531-0000	.ROLLER	1-39, 1-41, 1-87, 1-89, 1-91, 1-93
1548540-0000	.ROLLER	1-39, 1-41, 1-87, 1-89, 1-91, 1-93
1548541-0000	.ROLLER	1-39, 1-41, 1-87, 1-89, 1-91, 1-93
1548550-0000	.RAIL	5-259, 5-261, 5-263, 5-265, 5-267, 5-269
1548551-0000	.SPACER	5-259, 5-261, 5-263, 5-265, 5-267, 5-269
1548612-0000	.COVERING PLATE	5-35, 5-37, 5-39, 5-95, 5-97
1548728-0100	.TERMINAL BLOCK	1-387, 1-389
1548729-0000	.RAIL	1-395, 1-397
1548732-0000	.LID	1-155, 1-157
1548733-0100	.CONNECTION BOX	1-3
1548734-0000	.FLANGE	1-161, 1-163
1548735-0000	.LID	1-161, 1-163
1548736-0200	.BENDING ROLLER	1-131, 1-133
1548739-0000	.FLANGE	1-161, 1-163
1548742-0000	.SPACER	1-223
1548743-0000	.WASHER	1-223
1548749-0000	.PIPE	1-387, 1-389
1548751-0000	.BUSHING	1-181, 1-183
1548869-0000	.SPACER	1-387, 1-389
1548870-0000	.SPACER	1-387, 1-389
1548872-0100	.PILLAR	1-5
1548876-0100	.IH EQUIPMENT	1-5
1548877-0000	.SPACER	1-139
1548892-0100	.CALENDER ROLLER	1-131, 1-133
1548940-0000	.SPRING	4-143, 4-145, 4-199, 4-201
1549126-0000	.NOZZLE	5-199, 5-201, 5-203, 5-205, 5-207, 5-209
1549127-0000	.NOZZLE	5-199, 5-201, 5-203, 5-205, 5-207, 5-209
1549312-0000	.INSERT	4-115, 4-117, 4-119, 4-121, 4-143, 4-145, 4-175, 4-177, 4-179, 4-181, 4-199, 4-201
1549324-0000	.BRACKET	8-111, 8-113
1549332-0000	.ROLLER	8-255
1549344-0000	.HOLDER	7-9
1549388-0000	.SPACER	5-199, 5-201, 5-203, 5-205, 5-207, 5-209
1549389-0000	.SPACER	5-199, 5-201, 5-203, 5-205, 5-207, 5-209
1549390-0000	.NUT	5-199, 5-201, 5-203, 5-205, 5-207, 5-209
1549406-0000	.PACKAGE GUIDE	5-41, 5-43, 5-105, 5-107
1549411-0000	.PACKAGE GUIDE	5-41, 5-43, 5-105, 5-107
1549508-0000	.SPACER SCREW	5-51, 5-53, 5-55
1549512-0000	.SPACER	5-65
1549513-0000	.SLIDE	5-67, 5-69, 5-71, 5-73, 5-75
1549514-0000	.SLIDE	5-67, 5-69, 5-71, 5-73, 5-75
1549515-0000	.BAR	5-67, 5-69, 5-71, 5-73, 5-75
1549516-0000	.BAR	5-67, 5-69, 5-71, 5-73, 5-75
1549517-0000	.GUIDE	5-67, 5-69, 5-71, 5-73, 5-75
1549518-0000	.GUIDE	5-67, 5-69, 5-71, 5-73, 5-75
1549522-0000	.GUIDE	5-67, 5-69, 5-71, 5-73, 5-75
1549523-0000	.GUIDE	5-67, 5-69, 5-71, 5-73, 5-75
1549526-0000	.CONTAINER	1-221
1549542-0100	.TERMINAL BLOCK	1-387, 1-389
1549545-0000	.FLANGE	1-199
1549548-0000	.FLANGE	1-199
1549568-0000	.CHAIN	1-165, 1-167, 1-169
1549573-0100	.CRANK	1-131, 1-133
1549594-0000	.VOLUME SHIM	4-7, 4-9, 4-11, 4-17, 4-19, 4-21, 4-51, 4-53, 4-55, 4-57, 4-59, 4-65, 4-67, 4-69, 4-71, 4-73, 10-15, 10-17, 10-19, 10-21, 10-23, 10-25
1549614-0000	.LEFT UPPER GUIDE	5-41, 5-43, 5-105, 5-107
1549615-0000	.SPRING	5-289, 5-291, 5-293
1549822-0000	.FOLDING FLAP	4-165, 4-167, 4-211, 4-213, 4-215, 4-217

Part No	Description	Page No
1549823-0000	.FOLDING FLAP	4-165, 4-167, 4-211, 4-213, 4-215, 4-217
1549824-0000	.CARRIER RULER	4-165, 4-167
1549825-0000	.CARRIER RULER	4-211, 4-213, 4-215, 4-217
1549828-0000	.KNIFE	4-219, 10-15, 10-17, 10-19, 10-21, 10-23, 10-25
1549829-0000	.VOLUME BULGE	4-7, 4-9, 4-11, 4-17, 4-19, 4-21, 5-83
1549830-0000	.VOLUME SHIM	4-7, 4-9, 4-11, 4-17, 4-19, 4-21, 5-83, 10-15, 10-17, 10-19, 10-21, 10-23, 10-25
1549831-0000	.WEDGE	4-7, 4-9, 4-11, 4-17, 4-19, 4-21
1549832-0000	.PLUG	4-7, 4-9, 4-11
1549834-0000	.VOLUME BULGE	4-129, 4-131, 4-133, 4-187, 4-189, 4-191
1549836-0000	.VOLUME FLAP	4-7, 4-9, 4-11
1549837-0000	.VOLUME FLAP	4-17, 4-19, 4-21
1549843-0000	.VOLUME CAM	4-231, 4-233, 4-235, 4-237
1549844-0000	.FLAP	5-29, 5-31
1549846-0000	.BLOCK	5-5, 5-7
1549847-0000	.PUSHER	5-231, 5-233, 5-235, 5-237, 5-239, 5-241
1549848-0000	.PUSHER	5-231, 5-233, 5-235, 5-237, 5-239, 5-241
1549849-0000	.PLATE	5-231, 5-233, 5-235, 5-237, 5-239, 5-241
1549852-0000	.SLIDE	5-67, 5-69, 5-71, 5-73, 5-75, 5-153, 5-155
1549853-0000	.SLIDE	5-67, 5-69, 5-71, 5-73, 5-75, 5-161, 5-163
1549854-0000	.BAR	5-67, 5-69, 5-71, 5-73, 5-75, 5-153, 5-155
1549855-0000	.BAR	5-67, 5-69, 5-71, 5-73, 5-75, 5-161, 5-163
1549856-0000	.GUIDE	5-67, 5-69, 5-71, 5-73, 5-75
1549857-0000	.GUIDE	5-67, 5-69, 5-71, 5-73, 5-75
1549940-0000	.PUSHER	5-231, 5-233, 5-235, 5-237, 5-239, 5-241
1549980-0200	.FRAME	1-331
1549981-0000	.FLANGE	1-165, 1-167, 1-169
1549982-0000	.FLANGE	1-165, 1-167, 1-169
1549992-0000	.HINGE FLANGE	1-151, 1-153
1549993-0000	.HINGE FLANGE	1-151, 1-153
1549994-0000	.SPACER	1-151, 1-153
1550348-0001	.BEARING	5-257, 5-277, 6-67, 6-71
1550595-1801	.SLIDING STRIP	6-71
1550595-1802	.SLIDING STRIP	6-71
1550595-3353	.SLIDING STRIP	5-253, 5-255
1550595-3354	.SLIDING STRIP	5-253, 5-255
1550595-4153	.SLIDING STRIP	5-253, 5-255, 6-65
1550595-4154	.SLIDING STRIP	5-253, 5-255, 6-65
1550595-6700	.SLIDING STRIP	5-277
1550595-7110	.SLIDING STRIP	5-277
1550626-0005	.SPACER	6-71
1550667-0000	.BOTTOM PANEL	6-71
1550668-0000	.BRACKET	6-71
1550669-0000	.SIDE PLATE	6-71
1550687-0001	.SIDE PLATE	6-71
1550687-0002	.SIDE PLATE	6-71
1550689-0000	.SHAFT	6-71
1550690-0000	.SLEEVE	6-71
1550693-0000	.WASHER	6-71
1550698-0200	.WHEEL CURVE 90 DEGREES	6-69
1550743-0100	.RAIL HOLDER	5-259, 5-261, 5-263, 5-265, 5-267, 5-269
1550772-0000	.HOLDER	5-273
1550773-0000	.RAIL HOLDER	5-273
1558008-0000	.BLOCK	5-5, 5-7
1558020-0000	.ROD	5-5, 5-7
1558047-0000	.PUSHER	5-231, 5-233, 5-235, 5-237, 5-239, 5-241
1558123-0000	.VOLUME FLAP	4-17, 4-19, 4-21
1558178-0000	.PUSHER	5-231, 5-233, 5-235, 5-237, 5-239, 5-241
1558184-0000	.PLATE	5-231, 5-233, 5-235, 5-237, 5-239, 5-241
1558251-0000	.SHAFT	8-175
1558252-0000	.SCREW	8-175
1558253-0000	.ROLLER	8-175
1558254-0000	.SHAFT	1-343
1558304-0000	.TEMPLATE	10-37
1558327-0000	.LID	2-17, 2-19
1558328-0000	.NOZZLE	5-199, 5-201, 5-203, 5-205, 5-207, 5-209
1558329-0000	.NOZZLE	5-199, 5-201, 5-203, 5-205, 5-207, 5-209
1558352-0000	.FLANGE	1-341
1558356-0100	.SPLICE DETECTOR	1-341
1558357-0000	.SHAFT	1-199
1558358-0000	.WHEEL	1-199
1558417-0000	.FLANGE	1-233
1558427-0000	.LID	1-319
1558437-0000	.FRAME	1-333, 1-335
1558438-0000	.CHECKER PLATE	1-331
1558439-0000	.CHECKER PLATE	1-331
1558440-0000	.BRACKET	1-333, 1-335
1558441-0000	.BRACKET	1-11
1558447-0000	.SPACER	4-291, 4-293, 5-199, 5-201, 5-203, 5-205, 5-207, 5-209
1558477-0100	.WHEEL	10-43
1558479-0100	.HANDLE	10-43
1558480-0100	.LIFTING CYLINDER	10-43
1558484-0000	.PROTECTION PLATE	8-111, 8-113
1558487-0000	.SUPPORT	8-111, 8-113
1558494-0200	.PRODUCT VALVE	1-241, 1-243

Part No	Description	Page No
1558495-0100	.HEATING UNIT	1-313
1558496-0000	.FRAME	1-315
1558497-0200	.FRAME SECTION,UPPER	1-3
1558510-0000	.PIPE	1-221
1558511-0200	.PIPE WORK-AIR	1-203, 1-205
1558513-0000	.PILLAR	1-15, 1-17
1558519-0100	.TERMINAL BLOCK	1-383
1558522-0100	.ADJUSTING ROLLER	1-131, 1-133
1558526-0000	.SPACER	5-41, 5-43, 5-105, 5-107
1558527-0000	.SPACER	5-51, 5-53, 5-55
1558700-0000	.CARRIER	5-67, 5-69, 5-71, 5-73, 5-75
1558701-0000	.BUSHING	4-7, 4-9, 4-11, 4-17, 4-19, 4-21
1558713-0000	.SPACER SCREW	5-51, 5-53, 5-55
1558733-0000	.VOLUME BULGE	4-155, 4-157, 4-159, 4-161
1558734-0000	.VOLUME BULGE	4-129, 4-131, 4-133, 4-187, 4-189, 4-191
1558735-0000	.SPACER	5-41, 5-43, 5-51, 5-53, 5-55
1558736-0000	.SPACER	5-41, 5-43
1558737-0000	.HUB	5-77, 5-79
1558748-0000	.FLANGE	1-135, 1-137
1558749-0000	.FLANGE	1-135, 1-137
1558750-0000	.FLANGE	1-135, 1-137
1558751-0000	.FLANGE	1-135, 1-137
1558752-0000	.FLANGE	1-135, 1-137
1558754-0000	.LID	1-135, 1-137
1558755-0000	.FLANGE	1-135, 1-137
1558756-0000	.HOUSING	1-135, 1-137
1558757-0000	.NUT	1-135, 1-137
1558758-0000	.SHAFT	1-135, 1-137
1558760-0000	.KNOB	1-135, 1-137
1558761-0000	.SHAFT	1-135, 1-137
1558762-0000	.LID	1-135, 1-137
1558763-0000	.SLIDER	1-135, 1-137
1558764-0000	.FLANGE	1-135, 1-137
1558765-0000	.FLANGE	1-135, 1-137
1558766-0000	.BUSHING	1-135, 1-137
1558768-0000	.WASHER	1-135, 1-137
1558769-0200	.SEPARATOR	1-203, 1-205
1558795-0000	.RAILING	2-221, 2-223
1558798-0000	.BRACKET	8-111, 8-113
1558801-0000	.SHOULDER SCREW	8-167
1558817-0000	.VOLUME BULGE	4-7, 4-9, 4-11, 4-17, 4-19, 4-21
1558819-0000	.RAIL	4-129, 4-131, 4-133
1558820-0000	.RAIL	4-187, 4-189, 4-191
1558821-0000	.VOLUME BULGE	5-231, 5-233, 5-235, 5-237, 5-239, 5-241
1558830-0000	.COOLING PLATE	1-11
1558831-0000	.COOLING PLATE	1-11
1558832-0000	.RAIL	1-385
1558833-0000	.CONNECTION BOX	1-383
1558834-0200	.CONNECTION BOX	1-3
1558840-0000	.PIPE	1-319
1558841-0000	.PIPE	1-319
1558842-0000	.PIPE	1-319
1558845-0000	.BRACKET	1-423
1558864-0000	.CARRIER	5-67, 5-69, 5-71, 5-73, 5-75
1558889-0000	.SPACER SCREW	5-51, 5-53, 5-55
1558910-0000	.SPACER	5-41, 5-43, 5-51, 5-53, 5-55, 5-105, 5-107
1558911-0000	.PRESSURE ROLLER	8-19, 8-21, 8-73, 8-241
1558914-0000	.ROLLER BRACKET	8-19, 8-21
1558917-0000	.SPACER DISC	8-23
1558918-0000	.TIGHTENING NUT	8-23
1558932-0100	.TOP SECTION	5-33
1558933-0000	.FRAME	10-3
1558934-0000	.GUIDE	5-35, 5-37, 5-39
1558935-0100	.TOP RAIL	5-33
1558940-0200	.FLAP GUIDE	5-33
1558941-0000	.RAIL	5-279, 5-281
1558945-0000	.PIVOT PIN	2-179
1558946-0000	.PLUG	2-235
1558947-0000	.STRIP	2-215, 2-217, 2-221, 2-223
1558948-0000	.PLATE	2-181
1558949-0000	.PLATE	2-179
1558974-0000	.PIPE BRACKET	2-179
1558975-0000	.BLOCKING PIECE	2-179
1558983-0000	.DOOR	8-295
1558988-0100	.DOOR	8-257, 8-259, 8-261, 8-263
1566783-0000	.INDUCTOR	4-129, 4-131, 4-133, 4-187, 4-189, 4-191, 10-15, 10-17, 10-19, 10-21, 10-23, 10-25
1566843-0000	.INDUCTOR	4-129, 4-131, 4-133, 4-187, 4-189, 4-191, 10-15, 10-17, 10-19, 10-21, 10-23, 10-25
1566845-0002	.DOLLY	4-155, 4-157, 4-159, 4-161, 10-15, 10-17, 10-19, 10-21, 10-23, 10-25
2500071-0000	.O-RING	1-245, 1-247, 1-249, 1-251
2500078-0000	.BODY	1-287
2500081-0000	.ELBOW PIPE	10-15, 10-17, 10-19, 10-21, 10-23, 10-25
2500082-0000	.MOUNTING PLATE	1-245, 1-247, 1-249, 1-251
2500088-0100	.3-WAY VALVE	2-125
2500089-0000	.PIPE	10-41

Part No	Description	Page No
2500591-0000	.VOLUME BULGE	4-129, 4-131, 4-133, 4-187, 4-189, 4-191
2501219-0000	.BRACKET	8-143
2501220-0000	.BRACKET	8-143
2501221-0000	.BRACKET	8-143
2501290-0200	.FILLING SYSTEM	1-3
2501292-0000	.VALVE HOUSING	2-129
2501310-0100	.FILLING PIPE	1-241, 1-243
2501378-0000	.PIPE	2-59
2501612-0000	.NOZZLE	5-199, 5-201, 5-203, 5-205, 5-207, 5-209
2501851-0000	.CURVE	4-231, 4-233, 4-235, 4-237
2503429-0000	.HEATING PIPE	6-43, 6-45
2503436-0000	.SHAFT	1-343
2503438-0000	.LEVER	1-343
2503634-0000	.BEARING FLANGE	1-147
2503635-0000	.SHIELD	1-147
2503636-0000	.STOP SCREW	1-147
2503637-0000	.FAN	1-147
2503638-0000	.FAN HOUSING	1-147
2503654-0000	.RAIL	8-223, 8-225
2503661-0100	.CABLE CONNECTION	4-257
2503665-0100	.DESIGN CORRECTION DEVICE LEFT	4-289
2503666-0100	.DESIGN CORRECTION DEVICE RIGHT	4-289
2503669-0000	.ECCENTRIC SHAFT	4-295, 4-297
2503688-0000	.VOLUME BULGE	4-129, 4-131, 4-133, 4-187, 4-189, 4-191
2503689-0000	.VOLUME BULGE	4-155, 4-157, 4-159, 4-161
2503692-0000	.TEMPLATE	11-27
2503694-0000	.TEMPLATE	11-27
2503699-0000	.VOLUME BULGE	4-155, 4-157, 4-159, 4-161
2503700-0000	.VOLUME BULGE	4-129, 4-131, 4-133, 4-187, 4-189, 4-191
2503719-0000	.FRAME	11-13
2503720-0100	.OPENING FORCE TESTER	11-5
2503721-0100	.GRIPPING DEVICE	11-11
2503722-0100	.HOLDER	11-11
2503723-0000	.BLOCK	11-15
2503724-0000	.END PLATE	11-15
2503725-0000	.END PLATE	11-15
2503726-0000	.PLATE	11-15
2503727-0000	.PLATE	11-15
2503728-0000	.ARM	11-15
2503729-0000	.MOUNTING PLATE	11-15
2503730-0000	.SPACER	11-15
2503731-0000	.SLEEVE	11-15
2503732-0000	.SHAFT	11-15
2503733-0000	.HANDLE	11-15
2503734-0000	.WASHER	11-15
2503735-0100	.FRAME	11-11
2504435-0000	.MACHINE BODY	2-9
2504437-0000	.FRAME	2-133, 2-135, 2-137
2504496-0100	.TRANSPORT EQUIPMENT	1-3
2504497-0000	.CABLE DUCT	1-399, 1-401
2504498-0000	.CABLE DUCT	1-399, 1-401
2504499-0000	.LID	1-399, 1-401
2504502-0100	.CABLE TRENCH	1-3
2504503-0000	.COVER	1-399, 1-401
2504521-0000	.BAR	1-19
2504523-0000	.CENTERING	1-19
2504779-0100	.REAR MODULE	2-3
2504780-0100	.MACHINE BODY	2-5, 2-7
2504781-0100	.HYDROGEN PEROXIDE	2-5, 2-7
2504782-0100	.CHEMICALS	2-5, 2-7
2504784-0200	.BENDING ROLLER	2-9
2504785-0250	.CENTRAL MODULE	2-3
2504786-0200	.MACHINE BODY	2-61
2504787-0100	.CLEANING SYSTEM	2-61
2504789-0100	.LUBRICATION UNIT	2-87
2504790-0100	.LIGHT FIXTURE	2-93, 2-183
2504791-0100	.CABLE DUCT	2-3
2504792-0100	.DRAINING	2-61
2504793-0150	.FRONT MODULE	2-3
2504794-0100	.MACHINE BODY	2-131
2504795-0100	.CLEANING SYSTEM	2-131
2504801-0000	.BRACKET	8-15
2504807-0000	.AXLE PIN	8-15
2504808-0000	.BRACKET	8-15
2504812-0000	.BLOCK	8-31
2504917-0100	.PIPE WORK-WATER	2-3
2504918-0100	.PNEUMATIC SYSTEM	2-3
2504920-0100	.DOORS AND COVERS	2-3
2506269-0000	.BUSHING	1-19
2506273-0000	.LEVER	1-19
2506283-0000	.PIN	1-15, 1-17
2506291-0000	.BUSHING	1-19
2506328-0000	.BRACKET	8-125
2506334-0000	.SUPPORT	4-291, 4-293

Part No	Description	Page No
2506336-0000	.PROTECTIVE COVER	4-291, 4-293
2506337-0000	.ANGLE BRACKET	4-291, 4-293
2506338-0000	.SHAFT	4-291, 4-293
2506340-0000	.ECCENTRIC SHAFT	4-295, 4-297
2506359-0100	.VALVE PANEL	2-41
2506360-0100	.VALVE RAMP	2-47
2506361-0000	.PANEL	2-47
2506362-0100	.VALVE PANEL	2-149, 2-151
2506363-0100	.VALVE RAMP	2-161, 2-163, 2-165
2506364-0000	.PLATE	2-161, 2-163, 2-165
2506392-0000	.SPACER	4-291, 4-293
2506496-0100	.PRESSURE ROLLER	8-17
2506497-0100	.PRESSURE ROLLER	8-17
2506498-0000	.SEALING PLATE	8-23
2506499-0000	.SEALING PLATE	8-23
2506500-0000	.PLATE	8-23
2506501-0000	.PLATE	8-23
2506502-0000	.PLATE	8-23
2506503-0000	.PLATE	8-23
2506504-0000	.PLATE	8-23
2506505-0000	.PLATE	8-23
2506614-0100	.BOBBIN BRAKE	8-3, 8-5, 8-7, 8-9
2506615-0100	.BOBBIN BRAKE	8-3, 8-5, 8-7, 8-9
2506636-0000	.PIN	2-9, 2-133, 2-135, 2-137
2506637-0100	.AIR PIPE-LINE	2-15
2506647-0000	.LEVER	8-107
2506648-0000	.LEVER	8-109
2506649-0000	.BEARING FLANGE	8-107
2506650-0000	.FRAME	8-107, 8-109
2506651-0000	.BEARING FLANGE	8-109
2506652-0000	.AXLE PIN	8-107, 8-109
2506653-0000	.PIPE	2-69, 2-71
2506654-0000	.BLOCK	8-25
2506656-0000	.PLATE	8-25
2506657-0000	.SPACER	8-25
2506659-0000	.ROLLER	8-29
2506660-0000	.SPACER	8-13
2506661-0000	.ROLLER	8-27, 8-29, 8-57
2506663-0000	.SUPPORT	8-27
2506664-0000	.STEERING	8-13
2506666-0000	.AXEL	8-27, 8-29, 8-57
2506668-0200	.STRIP APPLICATOR	8-3, 8-5, 8-7, 8-9
2506776-0200	.CENTRAL LUBRICATION	2-87
2506796-0100	.CABLE CONNECTION	2-93
2506920-0000	.CANTILEVER	2-99, 2-101
2506921-0000	.SUPPORT	2-133, 2-135, 2-137
2506922-0000	.PIPE	2-145, 2-147
2506923-0000	.PIPE	2-145, 2-147
2506924-0000	.PIPE	2-145, 2-147
2506925-0000	.PIPE	2-145, 2-147
2506933-0000	.PIPE	2-69, 2-71
2506934-0000	.PIPE	2-69, 2-71
2507019-0100	.ROLLER	8-13
2507020-0100	.ROLLER	8-13
2507022-0200	.SPLICE DETECTOR	8-13
2507048-0000	.GASKET	1-245, 1-247, 1-249, 1-251
2507059-0300	.REGULATING VALVE	1-279, 1-281
2507060-0200	.PRODUCT LINES	1-241, 1-243
2507076-0000	.FOLDING FLAP	4-165, 4-167, 4-211, 4-213, 4-215, 4-217
2507077-0000	.FOLDING FLAP	4-165, 4-167, 4-211, 4-213, 4-215, 4-217
2507085-0000	.FOLDING FLAP	4-165, 4-167, 4-211, 4-213, 4-215, 4-217
2507086-0000	.FOLDING FLAP	4-165, 4-167, 4-211, 4-213, 4-215, 4-217
2507092-0000	.FOLDING FLAP	4-165, 4-167, 4-211, 4-213, 4-215, 4-217
2507093-0000	.FOLDING FLAP	4-165, 4-167, 4-211, 4-213, 4-215, 4-217
2507096-0000	.FOLDING FLAP	4-165, 4-167, 4-211, 4-213, 4-215, 4-217
2507097-0000	.FOLDING FLAP	4-165, 4-167, 4-211, 4-213, 4-215, 4-217
2507103-0000	.BEARING FLANGE	8-107, 8-109
2508129-0100	.DOOR	2-261, 2-263
2508130-0000	.DOOR	2-265
2508131-0000	.GLASS PANE	2-265, 2-267
2508132-0000	.RUBBER SEAL	2-265
2508133-0000	.LOCKING ARM	2-267, 2-269, 2-287, 2-317, 2-325, 2-331, 2-333
2508134-0000	.LOCKING ARM	2-267, 2-287, 2-317, 2-333
2508135-0100	.DOOR	2-261, 2-263
2508136-0000	.DOOR	2-267
2508137-0000	.RUBBER SEAL	2-267
2508138-0100	.DOOR	2-261, 2-263
2508139-0000	.DOOR	2-325
2508140-0000	.LOCKING ARM	2-269, 2-325, 2-331
2508141-0100	.DOOR	2-261, 2-263
2508142-0000	.DOOR	2-269
2508147-0000	.LOCKING ARM	2-329
2508149-0200	.DOOR	2-261, 2-263
2508150-0000	.DOOR	2-329

Part No	Description	Page No
2508151-0000	.RUBBER SEAL	2-329
2508152-0000	.LOCKING ARM	2-329
2508159-0100	.COVER	2-261, 2-263
2508160-0000	.COVER	2-275
2508161-0000	.RUBBER SEAL	2-275, 2-335
2508165-0100	.COVER	2-261, 2-263
2508166-0000	.COVER	2-277
2508167-0000	.RUBBER SEAL	2-277
2508168-0100	.COVER	2-261, 2-263
2508169-0000	.COVER	2-279
2508171-0000	.RUBBER SEAL	2-279
2508173-0100	.DIAGRAM	2-325
2508175-0100	.DOOR	2-261, 2-263
2508176-0000	.DOOR	2-333
2508177-0100	.DOOR	2-261, 2-263
2508178-0000	.DOOR	2-281
2508179-0000	.RUBBER SEAL	2-281
2508180-0001	.GLASS PANE	2-281
2508180-0002	.GLASS PANE	2-283
2508181-0100	.DOOR	2-261, 2-263
2508182-0000	.DOOR	2-283
2508183-0000	.RUBBER SEAL	2-283
2508186-0000	.RUBBER SEAL	2-269, 2-325
2508187-0100	.EMERGENCY STOP	8-281, 8-283
2508192-0000	.GUARD PLATE	2-349, 2-351
2508196-0000	.DRIVE SHAFT	2-349, 2-351
2508200-0000	.SHAFT	2-349, 2-351
2508201-0000	.CONVEYOR CHAIN	2-349, 2-351
2508203-0000	.HOLDER	2-349, 2-351
2508205-0001	.BRACKET	8-249
2508205-0002	.BRACKET	8-249
2508205-0003	.BRACKET	8-249
2508205-0005	.BRACKET	8-249
2508205-0006	.BRACKET	8-249
2508205-0007	.BRACKET	8-249
2508205-0008	.BRACKET	8-249
2508205-0009	.BRACKET	8-249
2508205-0010	.BRACKET	8-249
2508205-0012	.BRACKET	8-249
2508205-0019	.BRACKET	8-249
2508206-0000	.BENDING ROLLER	8-249
2508279-0150	.DOOR	1-5
2508280-0000	.FRAME	1-9
2508281-0000	.GASKET	1-9
2508283-0250	.DOOR	1-5
2508285-0000	.GASKET	1-7
2508292-0000	.BUSHING	1-53, 1-55, 1-57
2508297-0000	.WASHER	1-53, 1-55, 1-57
2508309-0000	.PLATE	1-53, 1-55, 1-57
2508311-0000	.PLATE	1-53, 1-55, 1-57
2508315-0000	.SCREW	1-321, 1-323
2508369-0200	.PLATFORM	2-201, 2-203, 2-205, 2-207, 2-209, 2-211
2508370-0000	.PLATFORM	2-229
2508371-0000	.PLATFORM	2-229
2508374-0000	.CHECKER PLATE	2-229
2508375-0000	.CHECKER PLATE	2-229
2508379-0000	.CHECKER PLATE	2-229
2508380-0000	.CHECKER PLATE	2-229
2508381-0000	.CHECKER PLATE	2-229
2508384-0000	.CHECKER PLATE	2-229
2508385-0000	.CHECKER PLATE	2-229
2508390-0000	.FASTENING PLATE	2-349, 2-351
2508406-0000	.STRUT	4-295, 4-297
2508424-0000	.PIPE	2-69, 2-71
2508425-0000	.PIPE	2-145, 2-147
2508426-0000	.BRACKET	2-145, 2-147
2508427-0000	.BRACKET	2-69, 2-71
2508428-0000	.PIPE	2-69, 2-71
2509544-0000	.PIPE	2-125
2509545-0000	.PIPE	2-125
2509546-0000	.CONNECTION	2-125
2509552-0000	.DRAINING	2-63, 2-133, 2-135, 2-137
2509613-0000	.BUSHING	8-23
2509614-0000	.BUSHING	8-23
2509617-0100	.INDUCTOR	8-17
2509646-0000	.CABLE DUCT	1-399, 1-401
2509647-0000	.CABLE DUCT	1-399, 1-401
2509648-0000	.CABLE DUCT	1-399, 1-401
2509649-0000	.COVER	1-399, 1-401
2509650-0000	.COVER	1-399, 1-401
2509651-0000	.COVER	1-399, 1-401
2509652-0000	.COVER	1-399, 1-401
2509654-0000	.PIPE	1-319
2509655-0000	.PIPE	1-319

Part No	Description	Page No
2509656-0000	.PIPE	1-319
2509658-0000	.BRACKET	1-419
2509659-0000	.PLATE	1-419
2509674-0000	.BRACKET	1-193, 1-195
2509681-0000	.RAIL	1-193, 1-195
2509935-0000	.SPACER	5-51, 5-53, 5-55
2509936-0000	.SPACER SCREW	5-51, 5-53, 5-55
2509937-0000	.SPACER	5-51, 5-53, 5-55
2509938-0000	.BOTTOM	5-29, 5-31
2509941-0000	.SUPPORT	2-133, 2-135, 2-137, 2-185, 2-187
2510347-0100	.FRONT GUARD	2-261, 2-263
2510348-0000	.COVER	2-297
2510349-0000	.SEALING STRIP	2-297
2510350-0000	.SUPPORT	2-297
2510351-0000	.SHAFT	2-297
2510352-0000	.DOOR	2-297
2510353-0000	.GUIDE	2-297
2510354-0000	.PIN	2-297
2510355-0000	.SHAFT	2-297
2510359-0000	.FASTENING BRACKET	8-25
2510360-0000	.SHAFT	8-25
2510361-0000	.CONNECTING ROD	8-25
2510362-0000	.SHAFT	8-25
2510363-0000	.SHAFT	8-25
2510364-0000	.SHAFT	8-25
2510366-0000	.SHAFT	8-17
2510399-0000	.BRACKET	8-147
2510400-0000	.HOLDER	8-147
2510401-0100	.HOLDER	8-133
2510404-0000	.SUPPORT	8-27, 8-29
2510405-0000	.SUPPORT	8-27, 8-29
2510755-0000	.BRACKET	7-9
2510764-0100	.COVER	2-261, 2-263
2510765-0000	.COVER	2-315
2510784-0000	.RUBBER SEAL	2-315
2510785-0000	.COVER PLATE	2-133, 2-135, 2-137
2510787-0000	.HOSE	4-299
2510833-0000	.PIPE	2-69, 2-71
2510901-0000	.BRACKET	2-63
2510904-0000	.HOLDER	2-63
2511330-0000	.SPACER	1-257
2512737-0000	.ROLLER	1-39, 1-41, 1-87, 1-89, 1-91, 1-93
2512738-0000	.ROLLER	1-39, 1-41, 1-87, 1-89, 1-91, 1-93
2512740-0000	.ROLLER	1-87, 1-89, 1-91, 1-93
2512741-0000	.ROLLER	1-39, 1-41, 1-87, 1-89, 1-91, 1-93
2512742-0000	.ROLLER	1-39, 1-41, 1-87, 1-89, 1-91, 1-93
2512746-0000	.ROLLER	1-47, 1-49, 1-105, 1-107, 1-109
2512748-0000	.ROLLER	1-47, 1-49, 1-105, 1-107, 1-109
2512749-0000	.ROLLER	1-47, 1-49, 1-105, 1-107, 1-109
2512768-0000	.SHAFT	1-15, 1-17
2512769-0000	.SHAFT	1-15, 1-17
2512774-0000	.SHIM	1-15, 1-17
2512779-0000	.RING	1-117, 1-119
2512780-0100	.SEAL	1-23, 1-25
2512821-0000	.EXTERNAL CLEANING DIAGRAM	2-327, 7-33
2512825-0000	.DIAGRAM	2-327
2512826-0000	.DIAGRAM	2-327
2512829-0000	.PNEUMATIC DIAGRAM	2-161, 2-163, 2-165, 2-327
2512830-0100	.FRONT COVER	2-261, 2-263
2512910-0300	.CLEANING SYSTEM	1-3
2512930-0200	.SUPPORT RAIL	1-5
2512936-0100	.CLEANING CUP	1-295
2512939-0000	.DISTRIBUTOR BLOCK	1-263
2513013-0000	.SHAFT	4-129, 4-131, 4-133, 4-155, 4-157, 4-159, 4-161, 4-187, 4-189, 4-191
2513014-0000	.CUTTING JAW	4-155, 4-157, 4-159, 4-161
2513015-0000	.HOLDER	4-129, 4-131, 4-133, 4-187, 4-189, 4-191
2514045-0000	.CARRIER	4-115, 4-117, 4-119, 4-121
2514047-0000	.CARRIER	4-175, 4-177, 4-179, 4-181
2514048-0200	.CARRIER PRESSURE LEFT	4-5
2514049-0000	.CARRIER	4-115, 4-117, 4-119, 4-121
2514050-0200	.CARRIER PRESSURE RIGHT	4-5
2514051-0000	.CARRIER	4-175, 4-177, 4-179, 4-181
2514077-0100	.EXPANSION VESSEL	7-13, 7-15
2514083-0000	.REDUCTION NIPPLE	7-29
2514087-0000	.PLATE	7-29
2514204-0100	.DRAINING	2-9
2514205-0100	.PIPE WORK-WATER	2-237
2514254-0100	.TUBE FLUSHING	2-237
2514255-0100	.PIPE WORK-WATER	2-237
2514392-0100	.MACHINE CARRIAGE	11-67
2514514-0000	.INDUCTOR	1-53, 1-55, 1-57
2514521-0000	.ROLLER	1-105, 1-107, 1-109
2514522-0000	.INDUCTOR	1-53, 1-55, 1-57
2514804-0000	.PIN	2-63

Part No	Description	Page No
2514830-0000	.FRONT COVER	2-293
2514831-0000	.SEALING STRIP	2-293
2514832-0000	.GLASS PANE	2-293
2515217-0000	.BRACKET	2-139
2515289-0000	.BRACKET	8-135
2515291-0000	.BRACKET	11-63
2515292-0000	.BRACKET	11-63
2515323-0100	.VALVE RAMP	1-375
2515324-0100	.VALVE RAMP	1-367
2515325-0100	.VALVE RAMP	1-367
2517062-0100	.FRONT COVER	2-289
2517371-0000	.CLAMP	1-293
2517967-0000	.EXTENSION	5-199, 5-201, 5-203, 5-205, 5-207, 5-209
2518035-0000	.FLAP	5-77, 5-79
2518098-0000	.COUNTER ROLLER	1-31, 1-33, 1-75, 1-77, 1-79
2518119-0000	.PLATE	8-121
2518129-0000	.GUIDE	5-153, 5-155
2518130-0000	.GUIDE	5-161, 5-163
2518145-0101	.FLEXBOX TETRA BRIK	9-149, 9-151
2518146-0100	.TPOP PANEL 15"	2-3
2518147-0101	.PANEL UNIT 15"	2-337
2518148-0000	.PANEL	2-339
2518149-0000	.FOIL	2-339
2518157-0000	.DOOR	2-339
2519430-0000	.BRACKET	2-145, 2-147
2519437-0000	.TUBE	1-235
2519439-0000	.TUBE	1-235
2519440-0000	.TUBE	1-235
2519441-0000	.TUBE	1-319
2519442-0000	.TUBE	1-319
2519443-0000	.TUBE	1-319
2519444-0000	.TUBE	1-319
2519554-0000	.PIPE	2-23
2519555-0000	.PIPE	2-23
2519556-0000	.BRACKET	2-59
2519570-0100	.DRAINING	2-3
2519571-0000	.PIPE	2-347
2519572-0000	.PIPE	2-347
2519574-0100	.HYDROGEN PEROXIDE CONCENTRATION METER	2-51
2520160-0000	.CLAMP	5-145, 5-147, 5-149
2520168-0000	.SLIDE	5-85, 5-87, 5-89
2520170-0000	.FLAP	5-85, 5-87, 5-89
2520172-0000	.FOLDING PART	5-115, 5-117, 5-119
2520175-0000	.FOLDING PART	5-115, 5-117, 5-119
2520178-0000	.GUIDE	5-105, 5-107
2520179-0000	.GUIDE	5-105, 5-107
2520180-0000	.CABLE DUCT	2-343, 2-345
2520181-0000	.LID	2-343, 2-345
2520430-0000	.HOLDER	2-133, 2-135, 2-137, 2-185, 2-187
2520431-0000	.SUPPORT	2-133, 2-135, 2-137, 2-185, 2-187
2520470-0000	.CARRIER RULER	4-165, 4-167
2520471-0000	.CARRIER RULER	4-211, 4-213, 4-215, 4-217
2520472-0000	.VOLUME FLAP	4-17, 4-19, 4-21
2520473-0000	.VOLUME BULGE	4-7, 4-9, 4-11, 4-17, 4-19, 4-21
2520474-0000	.VOLUME SHIM	4-7, 4-9, 4-11, 4-17, 4-19, 4-21
2520484-0100	.PIPE WORK-HYDRAULIC	2-73
2522128-0150	.MOTOR UNIT	5-3
2522129-0100	.INFEED CONVEYOR VARIANT	5-3
2522148-0000	.PIPE	7-47
2522166-0000	.GUIDE	5-153, 5-155
2522167-0000	.GUIDE	5-161, 5-163
2522184-0000	.PIPE	7-47
2522195-0000	.CONNECTION	1-291
2522196-0000	.SPACER	5-199, 5-201, 5-203, 5-205, 5-207, 5-209
2522197-0000	.PLATE	5-231, 5-233, 5-235, 5-237, 5-239, 5-241
2522199-0000	.BLOCK	5-5, 5-7
2522201-0000	.FLAP	5-77, 5-79
2522202-0000	.SPACER	5-65, 5-137, 5-139, 5-141, 5-143
2522213-0004	.SHAFT	1-47, 1-49, 1-87, 1-89, 1-91, 1-93, 1-105, 1-107, 1-109
2522213-0005	.SHAFT	1-47, 1-49, 1-105, 1-107, 1-109
2522213-0006	.SHAFT	1-75, 1-77, 1-79, 1-105, 1-107, 1-109, 1-113, 1-115
2522213-0007	.SHAFT	1-87, 1-89, 1-91, 1-93, 1-113, 1-115
2522213-0008	.SHAFT	1-105, 1-107, 1-109
2522213-0009	.SHAFT	1-105, 1-107, 1-109
2522213-0010	.SHAFT	1-105, 1-107, 1-109
2522213-0013	.SHAFT	1-47, 1-49
2522213-0015	.SHAFT	1-47, 1-49, 1-87, 1-89, 1-91, 1-93, 1-123, 1-125, 1-127
2522213-0016	.SHAFT	1-125, 1-127
2522213-0017	.SHAFT	1-125, 1-127
2522213-0019	.SHAFT	1-105, 1-107, 1-109
2522213-0020	.SHAFT	1-105, 1-107, 1-109
2522233-0000	.BUSHING	1-19
2522235-0000	.COMPRESSION SPRING	1-19
2523265-0000	.HOOK	11-63

Part No	Description	Page No
2523268-0000	.SHAFT	1-245, 1-247, 1-249, 1-251, 10-15, 10-17, 10-19, 10-21, 10-23, 10-25
2523480-0000	.SLIDE	5-259, 5-261, 5-263, 5-265, 5-267, 5-269
2523482-0000	.PUSH BUTTON BOX	8-305
2523483-0000	.PUSH BUTTON BOX	8-305
2523497-0000	.BENDING ROLLER	8-247
2523499-0000	.SHAFT	8-247
2523500-0000	.AXLE PIN	8-247
2523597-0000	.SLIDER	8-145
2523598-0000	.SPLICING TABLE	8-145
2523600-0000	.PIN	8-145
2523601-0000	.PAD	8-145
2523721-0000	.PIPE	11-83
2523765-0000	.BENDING ROLLER	8-125
2523766-0001	.BRACKET	8-125
2523766-0002	.BRACKET	8-125
2523766-0003	.BRACKET	8-125
2523766-0005	.BRACKET	8-125
2523766-0006	.BRACKET	8-125
2523766-0007	.BRACKET	8-125
2523766-0008	.BRACKET	8-125
2523766-0009	.BRACKET	8-125
2523766-0010	.BRACKET	8-125
2523766-0012	.BRACKET	8-125
2523766-0013	.BRACKET	8-125
2523811-0100	.WHEEL	5-3
2523812-0100	.FLAP	5-77, 5-79
2524339-0000	.NOZZLE	5-199, 5-201, 5-203, 5-205, 5-207, 5-209
2524363-0000	.HANGER	7-49
2524388-0000	.VOLUME FLAP	4-7, 4-9, 4-11
2524504-0000	.BRACKET	2-63
2524509-0100	.FLAP HEATER BODY	5-3
2524512-0000	.PUSHER	5-231, 5-233, 5-235, 5-237, 5-239, 5-241
2524600-0100	.PRESSURE ROLLER	8-149, 8-151
2524600-0200	.PRESSURE ROLLER	8-149, 8-151
2524601-0000	.AXLE PIN	8-157, 8-159
2524602-0000	.HANDLE	8-157, 8-159
2524603-0000	.HOLDER	8-157, 8-159
2524604-0000	.ROCKER ARM	8-157, 8-159
2524606-0000	.CABLE DUCT	8-131
2524607-0000	.CABLE DUCT	8-131
2525338-0000	.PLUG	1-311
2525339-0000	.BRACKET	8-135
2525570-0000	.COVER	3-23
2526249-0000	.ROLLER	5-231, 5-233, 5-235, 5-237, 5-239, 5-241
2526563-0000	.HANDLE	5-83, 5-85, 5-87, 5-89
2526567-0000	.CYLINDER	5-83, 5-85, 5-87, 5-89
2526575-0000	.FOLDING BAR	5-105, 5-107
2526578-0000	.GUIDE	5-153, 5-155
2526579-0000	.GUIDE	5-161, 5-163
2526810-0000	.HOLDER	4-155, 4-157, 4-159, 4-161
2526811-0000	.HOLDER	4-129, 4-131, 4-133, 4-187, 4-189, 4-191
2526812-0000	.SHAFT	4-129, 4-131, 4-133, 4-155, 4-157, 4-159, 4-161, 4-187, 4-189, 4-191
2526820-0000	.LINK	1-191
2526825-0000	.WASHER	1-31, 1-33, 1-39, 1-41, 1-75, 1-77, 1-79, 1-87, 1-89, 1-91, 1-93
2526826-0000	.BUSHING	1-31, 1-33, 1-39, 1-41, 1-75, 1-77, 1-79, 1-87, 1-89, 1-91, 1-93
2526827-0000	.SHAFT	1-31, 1-33, 1-39, 1-41, 1-75, 1-77, 1-79, 1-87, 1-89, 1-91, 1-93
2526841-0000	.SHAFT	1-19
2526842-0000	.LINK	1-191
2526849-0000	.PLATE	1-191
2526850-0000	.SHAFT	1-191
2526851-0000	.SHUTTER	1-191
2526853-0400	.VALVE PANEL	1-353
2526854-0300	.VALVE PANEL	1-353
2526858-0000	.DOWEL	1-15, 1-17
2526859-0000	.CAM	1-15, 1-17
2527252-0100	.CONNECTION BOX	2-93
2527253-0100	.CONNECTION BOX	2-51
2527295-0150	.CABLE HARNESS	2-183
2527297-0100	.CONNECTION BOX	2-183
2527299-0100	.CONNECTION BOX	2-183
2527300-0150	.ELECTRIC EQUIPMENT	2-131
2527368-0000	.PNEUMATIC DIAGRAM	2-47, 2-161, 2-163, 2-165, 2-327, 7-79
2527371-0000	.INSERT	2-189, 2-191
2527509-0000	.PNEUMATIC DIAGRAM	2-47, 2-327
2527525-0000	.BRACKET	2-85
2527529-0000	.GUIDE UPPER L	5-41, 5-43
2527530-0000	.GUIDE UPPER R	5-41, 5-43
2527531-0000	.TIE ROD	5-13, 5-15
2527639-0000	.RUBBER SEAL	2-287, 2-333
2527640-0000	.GLASS PANE	2-287, 2-333
2527703-0100	.GUIDE	5-145, 5-147, 5-149
2527703-0101	.GUIDE	10-11, 10-13
2527703-0102	.GUIDE	10-11, 10-13
2527703-0103	.GUIDE	10-11, 10-13

Part No	Description	Page No
2527703-0104	.GUIDE	10-11, 10-13
2527703-0105	.GUIDE	10-11, 10-13
2527703-0108	.GUIDE	10-11, 10-13
2527703-0109	.GUIDE	10-11, 10-13
2527703-0110	.GUIDE	10-11, 10-13
2527703-0111	.GUIDE	10-11, 10-13
2527703-0120	.GUIDE	10-11, 10-13
2527703-0121	.GUIDE	10-11, 10-13
2527703-0125	.GUIDE	10-11, 10-13
2527703-0126	.GUIDE	10-11, 10-13
2527703-0127	.GUIDE	10-11, 10-13
2527703-0128	.GUIDE	10-11, 10-13
2527703-0129	.GUIDE	10-11, 10-13
2527703-0130	.GUIDE	10-11, 10-13
2527704-0100	.GUIDE	5-145, 5-147, 5-149
2527704-0101	.GUIDE	10-11, 10-13
2527704-0102	.GUIDE	10-11, 10-13
2527704-0103	.GUIDE	10-11, 10-13
2527704-0104	.GUIDE	10-11, 10-13
2527704-0105	.GUIDE	10-11, 10-13
2527704-0108	.GUIDE	10-11, 10-13
2527704-0109	.GUIDE	10-11, 10-13
2527704-0110	.GUIDE	10-11, 10-13
2527704-0111	.GUIDE	10-11, 10-13
2527704-0120	.GUIDE	10-11, 10-13
2527704-0121	.GUIDE	10-11, 10-13
2527704-0125	.GUIDE	10-11, 10-13
2527704-0126	.GUIDE	10-11, 10-13
2527704-0127	.GUIDE	10-11, 10-13
2527704-0128	.GUIDE	10-11, 10-13
2527704-0129	.GUIDE	10-11, 10-13
2527704-0130	.GUIDE	10-11, 10-13
2527725-0000	.CATCH	4-27, 4-29, 4-39, 4-41
2527792-0000	.SUPPORT	5-145, 5-147, 5-149, 5-309, 5-311, 5-317
2527793-0000	.SHAFT	5-145, 5-147, 5-149, 5-309, 5-311, 5-317
2528044-0100	.PNEUMATIC SYSTEM	2-131
2528046-0100	.HOSE INSTALLATION	2-149, 2-151
2528056-0000	.RESISTANCE	1-321, 1-323
2528057-0000	.RESISTANCE	1-321, 1-323
2528058-0000	.COVER	1-321, 1-323
2528059-0000	.BRACKET	1-321, 1-323
2528061-0000	.SCREW	1-223
2528062-0000	.SCREW	1-223
2528068-0000	.CAM	1-15, 1-17
2528070-0000	.LOCKING LEVER	1-15, 1-17
2528073-0000	.LID	1-135, 1-137
2528076-0100	.STERILE AIR SYSTEM	1-3
2528079-0200	.PNEUMATIC SYSTEM	1-3
2528080-0200	.HOSE INSTALLATION	1-353
2528081-0200	.HOSE HOLDER	1-353
2528082-0000	.PIPE	1-381
2528083-0000	.TUBE	1-381
2528087-0100	.EMERGENCY STOP	1-5
2528088-0000	.HOLDER	1-15, 1-17
2528101-0100	.BLOWING SYSTEM	1-131, 1-133
2528102-0000	.LOCKING LEVER	1-15, 1-17
2528105-0000	.PLATE	1-345, 1-347
2528106-0000	.FLANGE	1-15, 1-17
2528107-0000	.SHIM	1-15, 1-17
2528110-0000	.HOUSING	1-341
2528111-0000	.PLATE	1-15, 1-17
2528112-0000	.BRACKET	1-71, 1-73
2528113-0000	.BRACKET	1-71, 1-73
2528114-0000	.COVER PLATE	1-71, 1-73
2528118-0001	.LOCK PLATE	1-39, 1-41, 1-87, 1-89, 1-91, 1-93
2528118-0002	.LOCK PLATE	1-87, 1-89, 1-91, 1-93
2528118-0003	.LOCK PLATE	1-75, 1-77, 1-79, 1-87, 1-89, 1-91, 1-93
2528118-0004	.LOCK PLATE	1-31, 1-33, 1-39, 1-41, 1-75, 1-77, 1-79, 1-87, 1-89, 1-91, 1-93
2528118-0005	.LOCK PLATE	1-31, 1-33, 1-39, 1-41, 1-75, 1-77, 1-79, 1-87, 1-89, 1-91, 1-93
2528119-0001	.LOCK PLATE	1-39, 1-41, 1-87, 1-89, 1-91, 1-93
2528119-0002	.LOCK PLATE	1-87, 1-89, 1-91, 1-93
2528119-0003	.LOCK PLATE	1-75, 1-77, 1-79, 1-87, 1-89, 1-91, 1-93
2528119-0004	.LOCK PLATE	1-31, 1-33, 1-39, 1-41, 1-75, 1-77, 1-79, 1-87, 1-89, 1-91, 1-93
2528119-0005	.LOCK PLATE	1-31, 1-33, 1-39, 1-41, 1-75, 1-77, 1-79, 1-87, 1-89, 1-91, 1-93
2528123-0001	.LOCK PLATE	1-39, 1-41, 1-47, 1-49, 1-87, 1-89, 1-91, 1-93, 1-105, 1-107, 1-109
2528123-0002	.LOCK PLATE	1-47, 1-49, 1-75, 1-77, 1-79, 1-87, 1-89, 1-91, 1-93, 1-105, 1-107, 1-109
2528123-0003	.LOCK PLATE	1-31, 1-33, 1-39, 1-41, 1-75, 1-77, 1-79, 1-87, 1-89, 1-91, 1-93
2528123-0004	.LOCK PLATE	1-31, 1-33, 1-39, 1-41, 1-75, 1-77, 1-79, 1-87, 1-89, 1-91, 1-93
2528123-0005	.LOCK PLATE	1-47, 1-49, 1-87, 1-89, 1-91, 1-93
2528123-0006	.LOCK PLATE	1-125, 1-127
2528123-0007	.LOCK PLATE	1-47, 1-49, 1-105, 1-107, 1-109
2528123-0008	.LOCK PLATE	1-39, 1-41, 1-47, 1-49, 1-87, 1-89, 1-91, 1-93, 1-105, 1-107, 1-109
2528123-0009	.LOCK PLATE	1-125, 1-127
2528127-0000	.BRACKET	1-345, 1-347

Part No	Description	Page No
2528128-0000	.SHAFT	1-345, 1-347
2528129-0200	.FRAME HOUSING	1-155, 1-157
2528133-0000	.WASHER	1-161, 1-163
2528134-0000	.GASKET	1-161, 1-163
2528135-0000	.SHAFT	1-345, 1-347
2528136-0000	.SQUEE-GEE ROLLER	1-171, 1-173, 1-175, 1-177
2528144-0000	.FRAME	1-153
2528145-0150	.DOOR	1-131, 1-133
2528146-0150	.DOOR	1-131, 1-133
2528455-0100	.ELECTRIC EQUIPMENT	2-5, 2-7
2528457-0100	.PNEUMATIC SYSTEM	2-5, 2-7
2529069-0000	.PIPE	2-69, 2-71
2529072-0000	.PIPE	1-319
2529073-0000	.PIPE	1-319
2529110-0000	.BRACKET	2-69, 2-71
2529111-0000	.BRACKET	2-69, 2-71
2529116-0150	.ELECTRIC EQUIPMENT	2-61
2529117-0100	.DOOR SAFETY SWITCH	2-93
2529167-0200	.LUBRICATING SYSTEM	2-61
2529169-0000	.HOLDER	2-133, 2-135, 2-137
2529178-0000	.HYDRAULIC PIPE	2-85
2529179-0000	.HYDRAULIC PIPE	2-85
2529182-0000	.HYDRAULIC PIPE	2-85
2529183-0000	.HYDRAULIC PIPE	2-85
2529187-0000	.SPACER	3-11
2529217-0000	.RAIL	5-115, 5-117, 5-119
2529219-0000	.RAIL	5-115, 5-117, 5-119
2529232-0000	.FOLDING BAR	5-115, 5-117, 5-119
2529240-0000	.FOLDING BAR	5-115, 5-117, 5-119
2529277-0000	.BAR	5-153, 5-155
2529278-0000	.BAR	5-161, 5-163
2529279-0000	.PLATE	5-153, 5-155, 5-161, 5-163
2529289-0000	.PUSHER	5-231, 5-233, 5-235, 5-237, 5-239, 5-241
2529341-0000	.GASKET	2-63
2529342-0000	.GASKET	2-63
2529410-0150	.CABLE HARNESS	2-93
2529412-0000	.PUMP HOUSING	2-31
2529416-0000	.SHAFT	1-245, 1-247, 1-249, 1-251, 10-15, 10-17, 10-19, 10-21, 10-23, 10-25
2529417-0000	.SHAFT	1-245, 1-247, 1-249, 1-251, 10-15, 10-17, 10-19, 10-21, 10-23, 10-25
2529418-0000	.SHAFT	1-245, 1-247, 1-249, 1-251, 10-15, 10-17, 10-19, 10-21, 10-23, 10-25
2529419-0000	.SHAFT	1-245, 1-247, 1-249, 1-251, 10-15, 10-17, 10-19, 10-21, 10-23, 10-25
2529420-0000	.SHAFT	1-245, 1-247, 1-249, 1-251, 10-15, 10-17, 10-19, 10-21, 10-23, 10-25
2529484-0100	.PEROXIDE PIPE	1-313
2529485-0200	.SPRAY SYSTEM	1-331
2529499-0100	.CABLE HARNESS	2-51
2529544-0000	.CABLE DUCT	8-131
2529547-0100	.PAPER GUIDE	8-149, 8-151, 8-241
2529549-0000	.PLATE	8-157, 8-159
2529550-0000	.SUPPORT	8-25
2529551-0000	.PROTECTION PLATE	8-111, 8-113
2529569-0100	.INDUCTOR	8-13
2529571-0100	.PRESSURE ROLLER	8-13
2529572-0000	.BRACKET	8-21
2529573-0000	.BRACKET	8-19
2529578-0000	.BUSHING	8-23
2529579-0000	.COVER	2-349, 2-351
2529597-0200	.DOOR	2-261, 2-263
2529598-0000	.DOOR	2-331
2529599-0000	.RUBBER SEAL	2-331
2529603-0000	.GUIDE	5-67, 5-69, 5-71, 5-73, 5-75
2529604-0000	.GUIDE	5-67, 5-69, 5-71, 5-73, 5-75
2529605-0000	.SLIDE	5-67, 5-69, 5-71, 5-73, 5-75, 5-153, 5-155
2529606-0000	.SLIDE	5-67, 5-69, 5-71, 5-73, 5-75, 5-161, 5-163
2529607-0000	.BAR	5-67, 5-69, 5-71, 5-73, 5-75, 5-161, 5-163
2529608-0000	.BAR	5-67, 5-69, 5-71, 5-73, 5-75, 5-153, 5-155
2529609-0000	.GUIDE	5-67, 5-69, 5-71, 5-73, 5-75
2529610-0000	.GUIDE	5-67, 5-69, 5-71, 5-73, 5-75
2529664-0000	.CARRIER	5-289, 5-291, 5-293
2529670-0000	.WASHER	2-349, 2-351
2529671-0000	.FOLDING DEVICE	5-13, 5-15, 5-25
2529672-0000	.FOLDING DEVICE	5-13, 5-15, 5-27
2529673-0000	.SUPPORT	5-13, 5-15
2529674-0000	.SUPPORT	5-13, 5-15
2529675-0000	.LEVER	5-13, 5-15
2529676-0000	.LEVER	5-13, 5-15
2529742-0000	.CLAMP	1-383
2529750-0000	.COVERING PANEL	10-15, 10-17, 10-19, 10-21, 10-23, 10-25
2529760-0250	.COVERING PANEL	1-417
2529785-0000	.KNOB	5-137, 5-139, 5-141, 5-143, 5-145, 5-147, 5-149
2529786-0000	.KNOB	5-145, 5-147, 5-149
2529909-0000	.FOLDING BAR	5-51, 5-53, 5-55
2529910-0000	.FOLDING BAR	5-51, 5-53, 5-55
2529925-0000	.STEP	1-349
2529926-0000	.RAILING	1-337

Part No	Description	Page No
2529930-0000	.AIR NOZZLE	8-17
2529990-0000	.FRAME	8-131
2529991-0100	.RAILING	1-331
2530080-0100	.DOOR	2-261, 2-263
2530082-0000	.GLASS PANE	2-285, 2-315
2530087-0000	.DOOR	2-287
2530096-0000	.RAILING	1-337
2530124-0000	.ROLLER	4-243, 4-245
2530188-0100	.STEP	1-331
2530201-0000	.SPACER SCREW	5-51, 5-53, 5-55
2530256-0000	.VOLUME FLAP	4-7, 4-9, 4-11
2530257-0000	.VOLUME FLAP	4-17, 4-19, 4-21
2530284-0000	.GASKET	9-149, 9-151
2530285-0000	.GASKET	9-149, 9-151
2530286-0000	.RAIL	9-49, 9-51
2530287-0000	.PLATE	9-49, 9-51
2530288-0000	.GLASS PANE	9-63
2530292-0000	.BRACKET	4-115, 4-117, 4-119, 4-121, 4-175, 4-177, 4-179, 4-181
2530293-0000	.BRACKET	4-115, 4-117, 4-119, 4-121, 4-175, 4-177, 4-179, 4-181
2530296-0000	.ROLLER	4-115, 4-117, 4-119, 4-121, 4-175, 4-177, 4-179, 4-181
2530300-0000	.PIPE	2-133, 2-135, 2-137
2530301-0000	.PIPE	2-133, 2-135, 2-137
2530302-0000	.PIPE	2-133, 2-135, 2-137
2530303-0000	.PIPE	2-133, 2-135, 2-137
2530313-0000	.BUSHING	4-7, 4-9, 4-11, 4-17, 4-19, 4-21, 4-51, 4-53, 4-55, 4-57, 4-59, 4-65, 4-67, 4-69, 4-71 4-73
2530399-0000	.HANGER	8-15
2530405-0000	.BRACKET	8-15
2530408-0000	.LEVER	8-15
2530410-0200	.STRIP GUIDE	8-13
2530418-0000	.SPRING	5-145, 5-147, 5-149, 5-309, 5-311, 5-317
2530508-0000	.TIE ROD	4-143, 4-145, 4-199, 4-201
2531037-0000	.FRAME	1-139
2531038-0000	.FRAME	1-151
2531039-0150	.DOOR	1-131, 1-133
2531040-0000	.GASKET	1-151, 1-153
2531043-0100	.HOUSING	1-131, 1-133
2531044-0000	.BOX FRAME	1-149
2531045-0000	.GASKET	1-139
2531047-0200	.HOUSING	1-131, 1-133
2531052-0100	.PRESSURE UNIT	1-313
2531053-0000	.PLUG	1-155, 1-157
2531054-0000	.PLUG	1-155, 1-157
2531055-0000	.PLUG	1-155, 1-157
2531060-0000	.BRACKET	1-53, 1-55, 1-57
2531083-0000	.SLEEVE	1-309
2531114-0000	.CARRIER	4-143, 4-145
2531233-0000	.HYDRAULIC PIPE	2-85
2531234-0000	.HYDRAULIC PIPE	2-85
2531235-0000	.HYDRAULIC PIPE	2-85
2531236-0000	.HYDRAULIC PIPE	2-85
2531237-0000	.HYDRAULIC PIPE	2-85
2531238-0000	.HYDRAULIC PIPE	2-85
2531245-0000	.HOSE NIPPLE	7-17, 7-19, 7-23
2531274-0100	.ELECTRICAL CONNECTION	5-3
2531276-0000	.BRACKET	5-323, 5-325
2531423-0000	.NUT	7-17, 7-19, 7-23
2531493-0000	.BRACKET	8-145
2531500-0000	.PIPE	2-59
2531501-0000	.PIPE	2-59
2531703-0000	.BUSHING	4-129, 4-131, 4-133, 4-155, 4-157, 4-159, 4-161, 4-187, 4-189, 4-191
2532531-0000	.ROLLER	4-115, 4-117, 4-119, 4-121, 4-175, 4-177, 4-179, 4-181
2532535-0000	.HATCH	8-281, 8-283
2532561-0000	.SPACER	8-247
2532574-0000	.COVER	7-17, 7-23
2532580-0000	.HATCH	5-289, 5-291, 5-293
2532619-0000	.COVER	2-269, 2-325
2532620-0000	.GLASS PANE	2-325
2532806-0000	.ATTACHMENT PIPE	7-27
2532837-0000	.TUBE FLUSHING DEVICE	4-247
2532838-0000	.TUBE FLUSHING DEVICE	4-247
2532864-0000	.BRACKET	5-259, 5-261, 5-263, 5-265, 5-267, 5-269
2532895-0001	.LOCK PLATE	1-105, 1-107, 1-109
2532895-0002	.LOCK PLATE	1-47, 1-49, 1-105, 1-107, 1-109
2532895-0003	.LOCK PLATE	1-47, 1-49, 1-105, 1-107, 1-109, 1-113, 1-115
2532895-0004	.LOCK PLATE	1-47, 1-49, 1-105, 1-107, 1-109, 1-125, 1-127
2532895-0005	.LOCK PLATE	1-113, 1-115
2532895-0006	.LOCK PLATE	1-105, 1-107, 1-109
2532895-0008	.LOCK PLATE	1-125, 1-127
2532895-0009	.LOCK PLATE	1-113, 1-115
2532896-0000	.COVER	1-155, 1-157
2532897-0000	.GASKET	1-155, 1-157
2532898-0000	.BRACKET	1-53, 1-55, 1-57
2532899-0000	.BRACKET	1-53, 1-55, 1-57

Part No	Description	Page No
2532908-0000	.ROLLER	1-341
2532909-0200	.COVERING PANEL	1-3
2532911-0000	.ROLLER	1-341
2532912-0001	.LOCK PLATE	1-105, 1-107, 1-109
2532912-0002	.LOCK PLATE	1-105, 1-107, 1-109
2532914-0000	.SPACER	1-39, 1-41, 1-87, 1-89, 1-91, 1-93
2532915-0000	.WASHER	1-193, 1-195
2532916-0000	.AIR GUIDE	1-193, 1-195
2532918-0000	.HOLDER	1-193, 1-195
2532919-0000	.PLATE	1-193, 1-195
2532922-0000	.PLATE	1-193, 1-195
2532925-0000	.INDUCTOR	1-53, 1-55, 1-57
2532934-0100	.AIR KNIFE	1-131, 1-133
2532938-0000	.INDUCTOR	1-53, 1-55, 1-57
2532963-0000	.DEFLECTOR	1-149
2532964-0000	.DEFLECTOR	1-149
2532965-0000	.ROLLER	1-39, 1-41, 1-87, 1-89, 1-91, 1-93
2532968-0000	.BUSHING	1-227
2532969-0000	.SHAFT	1-175, 1-177
2532974-0000	.SETTING TOOL	11-5
2532977-0000	.BRACKET	1-15, 1-17
2532978-0000	.PLATE	1-15, 1-17
2532979-0000	.SPACER	1-11
2533627-0000	.SUPPORT BLOCK	1-15, 1-17
2533628-0000	.SUPPORT BLOCK	1-15, 1-17
2533638-0000	.AXLE PIN	3-5, 3-29
2533651-0100	.IH EQUIPMENT	9-77, 9-79, 9-81, 9-83, 9-85
2533671-0000	.SCREW	1-343
2533672-0000	.SHAFT	1-343
2533673-0000	.ROLLER	1-343
2533736-0000	.SLEEVE	4-231, 4-233, 4-235, 4-237
2533737-0000	.RAIL BRACKET	4-231, 4-233, 4-235, 4-237
2533740-0000	.RAIL BRACKET	4-231, 4-233, 4-235, 4-237
2533741-0000	.RAIL BRACKET	4-231, 4-233, 4-235, 4-237
2533742-0000	.RAIL BRACKET	4-231, 4-233, 4-235, 4-237
2533744-0000	.RAIL BRACKET	4-231, 4-233, 4-235, 4-237
2533745-0000	.RAIL BRACKET	4-231, 4-233, 4-235, 4-237
2533747-0000	.RAIL BRACKET	4-231, 4-233, 4-235, 4-237
2533763-0000	.COVERING PANEL	1-415
2533766-0100	.COVERING PANEL	1-3
2533767-0000	.COVERING PLATE	1-415
2533768-0000	.COVERING PLATE	1-415
2534851-0000	.BAR	4-295, 4-297
2535441-0000	.LEVER	4-305
2535442-0000	.PIVOT PIN	4-305
2535443-0000	.PIVOT PIN	4-231, 4-233, 4-235, 4-237
2535455-0000	.LINK	4-309
2535457-0000	.WOODRUFF KEY	4-309
2535458-0000	.SHAFT	4-309
2535461-0000	.CONNECTING ROD	4-305
2535538-0200	.FRAME	5-173, 5-175, 5-177
2535932-0000	.CAM	8-25
2535933-0000	.SUPPORT	8-25
2536026-0000	.CARRIER	4-199, 4-201
2536047-0000	.ARM	4-279, 4-281, 4-283
2536048-0000	.ARM	4-267, 4-269, 4-271
2537111-0000	.CONNECTION BOX	2-103
2537112-0000	.BOX	2-53
2537113-0000	.CONNECTION BOX	2-195, 2-197
2537114-0000	.CONNECTION BOX	2-199
2537120-0000	.BRACKET	2-63
2537128-0100	.DROP CHUTE VARIANT	5-3
2537129-0000	.SPACER	5-137, 5-139, 5-141, 5-143
2537844-0000	.RAILING	2-229
2538064-0000	.REFLECTOR	8-189, 8-191
2538065-0000	.REFLECTOR	8-179, 8-181
2538072-0100	.AUTOMATIC REEL LOADING	8-3, 8-5, 8-7, 8-9
2538073-0001	.SHIMS	8-111, 8-113
2538073-0002	.SHIMS	8-111, 8-113
2538075-0000	.BRACKET	8-111, 8-113
2538076-0000	.BRACKET	8-111, 8-113
2538110-0000	.RAIL	5-259, 5-261, 5-263, 5-265, 5-267, 5-269
2539277-0000	.SHIM	5-77, 5-79
2539440-0100	.ASEPTIC CHAMBER	1-3
2539445-0200	.PENDULUM ROLLER	1-131, 1-133
2539450-0200	.DRYING CHAMBER	1-3
2539452-0200	.FLOW SWITCH	1-295
2539455-0100	.VALVE	1-131, 1-133
2539457-0000	.LID	10-41
2539458-0100	.SPRAY TANK	1-253
2539459-0000	.HOLDER	10-41
2539471-0000	.COVERING PLATE	1-415
2539532-0000	.GASKET	9-71, 9-73
2540593-0000	.CAM	5-289, 5-291, 5-293

Part No	Description	Page No
2540594-0000	.CAM	5-289, 5-291, 5-293
2540595-0008	.COAXIAL CABLE	8-17
2540596-0003	.COAXIAL CABLE	2-117, 2-119
2540609-0000	.KNOB	5-137, 5-139, 5-141, 5-143
2540612-0000	.PLATE	5-145, 5-147, 5-149, 5-309, 5-311, 5-317
2540716-0100	.SIGNAL LAMP	2-215, 2-217, 2-221, 2-223, 2-229, 8-269
2540767-0000	.PIPE	2-219, 8-271
2540813-0000	.CHUTE	2-349, 2-351
2540814-0000	.SPLASH PLATE	2-349, 2-351
2540816-0000	.BRACKET	2-349, 2-351
2540817-0000	.CHUTE	2-349, 2-351
2540818-0000	.BRACKET	2-349, 2-351
2540823-0000	.BRACKET	5-301, 5-303, 6-5, 6-7
2541083-0100	.BENDING ROLLER	8-111, 8-113
2541125-0000	.SCREW	5-41, 5-43, 5-105, 5-107
2541634-0100	.EDGE ROLLER	1-23, 1-25
2541635-0200	.SQUEE-GEE ROLLER	1-131, 1-133
2541643-0000	.FLANGE	1-175, 1-177
2541645-0000	.SHIM	1-15, 1-17
2541646-0000	.SHIM	1-15, 1-17
2541651-0000	.PLATE	1-7, 1-9, 1-139, 1-151, 1-153, 1-201
2541656-0000	.BEAM	1-423
2541657-0000	.BEAM	1-423
2541658-0000	.SCREW	1-19
2541661-0000	.LID	1-191
2541664-0000	.COVER	1-11
2541673-0000	.WASHER	1-331
2541680-0100	.HYDROGEN PEROXIDE	1-3
2541681-0000	.WASHER	1-175, 1-177
2541682-0000	.BUSHING	1-175, 1-177
2541714-0100	.DROP CHUTE CRADLE	5-3
2541714-0200	.DROP CHUTE CRADLE	6-3
2541877-0000	.NAIL	5-231, 5-233, 5-235, 5-237, 5-239, 5-241
2541878-0000	.WASHER	5-231, 5-233, 5-235, 5-237, 5-239, 5-241
2541890-0100	.BRACKET	8-111, 8-113
2541891-0100	.FILTER	8-111, 8-113
2541942-0000	.BRACKET	8-245
2541943-0000	.BRACKET	8-303, 8-307
2542325-0100	.WASTE CONVEYOR	2-3
2542340-0000	.COLUMN	2-63
2542341-0000	.DRAINING	2-63
2542488-0000	.NUT	4-259
2542489-0200	.GUIDE	4-257
2542490-0000	.LID	2-67
2542491-0100	.HOLDER	2-63
2542492-0000	.LID	2-67
2542493-0000	.BLOCK	2-63
2542494-0000	.BLOCK	2-63
2542496-0000	.BRACKET	8-245
2543231-0000	.CARRIER	5-289, 5-291, 5-293
2543240-0000	.SPACER	5-199, 5-201, 5-203, 5-205, 5-207, 5-209
2543242-0000	.ANGLE BLOCK	5-67, 5-69, 5-71, 5-73, 5-75, 5-153, 5-155, 5-161, 5-163
2543349-0000	.DRAINING	2-63
2543480-0100	.FOLDING PART	5-3
2543481-0100	.TOP SECTION	5-93
2543482-0100	.TOP RAIL	5-93
2544199-0300	.STEAM PIPE	1-289
2544213-0000	.BRACKET	2-69, 2-71
2544214-0000	.PIPE	2-69, 2-71
2544303-0000	.GASKET	2-67
2544305-0000	.PROTECTION	2-273
2544306-0000	.DOOR	2-273
2544307-0000	.RUBBER SEAL	2-273
2544308-0000	.GLASS PANE	2-273
2544310-0100	.PROTECTIVE COVER	2-261, 2-263
2544311-0000	.BOX	2-37
2544312-0000	.FLOAT	2-37
2544313-0000	.PIPE	2-37
2544314-0000	.PIPE	2-37
2544316-0000	.PIPE	2-37
2544318-0000	.PIPE	2-37
2544319-0000	.COVER	2-37
2544321-0000	.COVER	2-37
2544324-0000	.PIPE	2-37
2544325-0000	.GASKET	2-37
2544326-0100	.INTEGRATED CLEANING UNIT	2-5, 2-7
2544330-0000	.PLUG	2-37
2544331-0000	.COVER	2-335
2544332-0000	.PROTECTION	2-335
2544333-0100	.DOOR	2-261, 2-263
2544339-0100	.FRAME	5-173, 5-175, 5-177
2544342-0000	.BRACKET	5-115, 5-117, 5-119
2544850-0100	.FORMING SECTION	1-3
2544865-0000	.BUSHING	1-15, 1-17

Part No	Description	Page No
2544866-0000	.WASHER	1-15, 1-17
2544873-0100	.CONNECTION PIPE	10-3
2544881-0000	.ROLLER	1-105, 1-107, 1-109
2544882-0000	.COUNTER ROLLER	1-75, 1-77, 1-79
2544883-0000	.PLATE	1-175, 1-177
2544884-0000	.PLATE	1-175, 1-177
2544885-0000	.ARM	1-175, 1-177
2544886-0000	.ARM	1-175, 1-177
2544897-0000	.BRACKET	1-53, 1-55, 1-57
2544898-0000	.SHAFT	1-53, 1-55, 1-57
2544902-0000	.BRACKET	5-211
2544990-0000	.VOLUME FLAP	4-7, 4-9, 4-11
2544991-0000	.VOLUME FLAP	4-17, 4-19, 4-21
2544992-0000	.VOLUME BULGE	4-7, 4-9, 4-11, 4-17, 4-19, 4-21
2544993-0000	.VOLUME SHIM	4-7, 4-9, 4-11, 4-17, 4-19, 4-21
2544995-0000	.GUIDE	5-67, 5-69, 5-71, 5-73, 5-75
2544996-0000	.GUIDE	5-67, 5-69, 5-71, 5-73, 5-75
2544997-0000	.SLIDE	5-67, 5-69, 5-71, 5-73, 5-75, 5-153, 5-155
2544998-0000	.SLIDE	5-67, 5-69, 5-71, 5-73, 5-75, 5-161, 5-163
2544999-0000	.BAR	5-67, 5-69, 5-71, 5-73, 5-75, 5-161, 5-163
2545000-0000	.BAR	5-67, 5-69, 5-71, 5-73, 5-75, 5-153, 5-155
2545006-0000	.SPACER	5-199, 5-201, 5-203, 5-205, 5-207, 5-209
2545017-0000	.PARALLEL KEYS WITH ROUND ENDS	3-7, 3-9
2545135-0000	.SPACER	5-199, 5-201, 5-203, 5-205, 5-207, 5-209
2545141-0000	.SIGN	2-161, 2-163, 2-165
2545159-0000	.SIGN	2-161, 2-163, 2-165
2545201-0000	.SIGN	2-161, 2-163, 2-165
2545236-0000	.NOZZLE	5-199, 5-201, 5-203, 5-205, 5-207, 5-209
2545245-0000	.BUSHING	5-289, 5-291, 5-293
2545352-0000	.TEMPLATE	10-37
2545433-0000	.SPACER	5-199, 5-201, 5-203, 5-205, 5-207, 5-209
2545537-0000	.SPACER	5-199, 5-201, 5-203, 5-205, 5-207, 5-209
2545545-0000	.INSERT	5-67, 5-69, 5-71, 5-73, 5-75
2545639-0250	.COVERING PANEL	1-417
2545651-0200	.STEAM SYSTEM	1-241, 1-243
2545658-0000	.PLATE	1-333, 1-335
2546229-0100	.ADAPTION TRANSFORMER	4-123, 4-125, 4-183, 4-185
2546319-0000	.HOLDER	2-47
2546323-0000	.SIGN	2-161, 2-163, 2-165
2546463-0000	.PRESSURE RAIL	8-167
2546474-0000	.INDUCTOR	4-129, 4-131, 4-133, 4-187, 4-189, 4-191, 10-15, 10-17, 10-19, 10-21, 10-23, 10-25
2546475-0000	.RAIL	4-129, 4-131, 4-133
2546476-0000	.RAIL	4-187, 4-189, 4-191
2546496-0000	.RAIL	2-53, 2-199
2546498-0000	.INSERT	2-185, 2-187
2546499-0300	.GUIDE	2-73
2546500-0100	.HYDRAULIC SYSTEM	2-61
2547010-0000	.BRACKET	4-7, 4-9, 4-11, 4-17, 4-19, 4-21
2547011-0000	.VOLUME FLAP	4-7, 4-9, 4-11
2547012-0000	.VOLUME FLAP	4-17, 4-19, 4-21
2547061-0000	.HOLDER	7-71, 7-73
2547187-0000	.PLATE	5-313
2547205-0200	.PRESSURE REGULATOR	1-203, 1-205
2547211-0000	.FLANGE	1-235
2547376-0200	.KNOB	1-53, 1-55, 1-57
2547377-0000	.WASHER	1-53, 1-55, 1-57
2547386-0000	.SHAFT	1-15, 1-17
2547387-0000	.ROD END	1-19
2547388-0000	.AXLE PIN	1-53, 1-55, 1-57
2547391-0100	.NOZZLE	1-313
2547398-0000	.LID	1-155, 1-157
2547399-0000	.LID	1-155, 1-157
2547401-0000	.SUPPORT PLATE	1-19
2547402-0000	.BRACKET	1-19
2547403-0000	.WHEEL	1-19
2547404-0000	.BRACKET	1-53, 1-55, 1-57
2547405-0000	.BRACKET	1-53, 1-55, 1-57
2547406-0000	.ROLLER	1-171, 1-173, 1-175, 1-177
2547407-0000	.PIPE	1-221
2547410-0100	.PRODUCT VALVE	1-265
2547419-0000	.SHIM	1-19
2547420-0100	.EDGE ROLLER	1-23, 1-25
2547421-0100	.FORMING RING	1-23, 1-25
2547422-0200	.UPPER FORMING RING	1-23, 1-25
2547425-0000	.BRACKET	1-341
2547470-0000	.PNEUMATIC DIAGRAM	2-161, 2-163, 2-165
2547474-0000	.SIGN LANGUAGE INDEPENDENT	7-19
2547568-0000	.PLATE	1-341
2547588-0000	.SPRING	4-115, 4-117, 4-119, 4-121, 4-175, 4-177, 4-179, 4-181
2547589-0000	.SPRING	4-115, 4-117, 4-119, 4-121, 4-175, 4-177, 4-179, 4-181
2547666-0000	.DOOR	8-303
2547667-0000	.DOOR	8-307
2549829-0000	.SPACER	8-167
2550125-0100	.COOLING UNIT	9-3, 9-5

Part No	Description	Page No
2550126-0000	.RAIL	9-77, 9-79, 9-81, 9-83, 9-85
2550129-0000	.CABLE DUCT	9-77, 9-79, 9-81, 9-83, 9-85
2550133-0000	.DIVIDER	9-77, 9-79, 9-81, 9-83, 9-85
2550138-0100	.PLATFORM	2-201, 2-203, 2-205, 2-207, 2-209, 2-211
2550139-0100	.PLATFORM	2-3
2550140-0000	.CHECKER PLATE	2-221, 2-223
2550141-0000	.CHECKER PLATE	2-221, 2-223
2550142-0000	.PLATFORM	2-221, 2-223
2550143-0000	.PLATFORM	2-221, 2-223
2550144-0000	.PLATFORM	2-221, 2-223
2550145-0000	.RAILING	2-221, 2-223
2550146-0000	.RAILING	2-221, 2-223
2550147-0000	.RAILING	2-221, 2-223
2550189-0000	.RAILING	2-221, 2-223
2550191-0000	.TOE PLATE	2-221, 2-223
2550192-0000	.TOE PLATE	2-221, 2-223
2550193-0000	.TOE PLATE	2-221, 2-223
2550211-0000	.VOLUME BULGE	5-29, 5-31
2550269-0001	.LOCKING ARM	8-303
2550269-0002	.LOCKING ARM	8-303
2550333-0000	.GUIDE LUG	8-293, 8-295, 8-303
2550890-0100	.VALVE	1-203, 1-205
2550891-0000	.BENDING ROLLER	1-135, 1-137
2550893-0000	.BENDING ROLLER	1-135, 1-137
2550895-0100	.CHANGE OVER VALVE	1-221
2550896-0000	.RAIL	8-241
2550944-0000	.WATER DIAGRAM	2-327, 7-71, 7-73
2550945-0000	.WATER DIAGRAM	2-327, 7-71, 7-73
2550979-0000	.TRANSPORT EQUIPMENT	10-3
2551119-0000	.PNEUMATIC DIAGRAM	2-327, 7-77
2551120-0000	.CARRIER	5-67, 5-69, 5-71, 5-73, 5-75
2551951-0000	.RAILING	2-215, 2-217, 2-221, 2-223
2551988-0000	.CABLE DUCT	9-71, 9-73
2551989-0000	.CABLE DUCT	9-71, 9-73
2552001-0000	.HYDRAULIC DIAGRAM	2-73, 2-327
2552002-0250	.BASE UNIT	4-3
2552003-0100	.FORMING UNIT	4-3
2552005-0100	.PRESSURE JAW	4-123, 4-125, 4-183, 4-185
2552006-0100	.INDUCTOR LEFT	4-123, 4-125
2552007-0100	.INDUCTOR RIGHT	4-183, 4-185
2552008-0200	.CUTTING JAW	4-153, 4-209
2552009-0100	.FOLDING FLAP LEFT	4-153
2552010-0200	.PISTON	4-153, 4-209
2552011-0100	.FOLDING FLAP RIGHT	4-209
2552018-0000	.CARRIER	5-289, 5-291, 5-293
2552022-0000	.GUIDE	5-35, 5-37, 5-39, 5-95, 5-97
2552077-0250	.DRIVE UNIT	3-3
2552078-0250	.DRIVE UNIT	3-3
2552080-0100	.LINK	3-5, 3-29
2552110-0200	.SUPPORT	3-5
2552111-0200	.SUPPORT	3-29
2552113-0100	.FLOW METER	7-13, 7-15
2552121-0000	.BRACKET	1-19
2552124-0000	.BRACKET	1-341
2552125-0100	.BENDING ROLLER	1-331
2552140-0000	.BRACKET	1-125, 1-127
2552141-0000	.BRACKET	1-125, 1-127
2552142-0000	.BRACKET	1-125, 1-127
2552143-0000	.BRACKET	1-125, 1-127
2552144-0000	.ROLL	1-125, 1-127
2552151-0000	.BRACKET	11-5
2552152-0000	.BRACKET	11-5
2552153-0000	.BRACKET	11-5
2552154-0000	.BRACKET	11-5
2552155-0000	.ROLL	1-125, 1-127
2552158-0000	.SCREW	1-125, 1-127
2552160-0000	.SUPPORT RING	1-47, 1-49, 1-105, 1-107, 1-109
2552161-0000	.SUPPORT RING	1-47, 1-49, 1-105, 1-107, 1-109
2552176-0001	.LOCK PLATE	1-47, 1-49, 1-105, 1-107, 1-109
2552176-0003	.LOCK PLATE	1-47, 1-49, 1-105, 1-107, 1-109
2552177-0001	.LOCK PLATE	1-47, 1-49, 1-105, 1-107, 1-109
2552177-0003	.LOCK PLATE	1-47, 1-49, 1-105, 1-107, 1-109
2552187-0000	.ROLLER	1-105, 1-107, 1-109
2552188-0000	.ROLLER	1-47, 1-49, 1-105, 1-107, 1-109
2552201-0000	.LOCKING DEVICE	1-279, 1-281
2552205-0000	.ROLLER	1-47, 1-49, 1-105, 1-107, 1-109
2552206-0000	.ROLLER	1-47, 1-49, 1-105, 1-107, 1-109
2552215-0300	.STEAM TRAP	1-289
2552445-0000	.SUPPORT	5-307
2552655-0000	.ROLLER	1-61, 1-63, 1-65, 1-67, 1-69, 1-117, 1-119
2552656-0000	.ROLLER	1-117, 1-119
2552776-0000	.ADAPTER	1-291
2552777-0000	.ADAPTER	1-291
2552794-0000	.PULLEY	5-211

Part No	Description	Page No
2552798-0000	.COMPRESSION ROD	8-167
2552821-0000	.BRACKET	8-111, 8-113
2552931-0100	.HOSE INSTALLATION	2-41
2553072-0000	.KEY FOR SAFETY SWITCH	8-303, 8-307
2553092-0000	.PLATE	1-143, 1-145
2553093-0000	.PLATE	1-143, 1-145
2553094-0000	.PIPE	1-143, 1-145
2553095-0000	.PIPE	1-143, 1-145
2553107-0000	.HOLDER	8-111, 8-113
2553108-0000	.HOLDER	8-111, 8-113
2553109-0000	.HOLDER	8-111, 8-113
2553115-0000	.PLATFORM	2-221, 2-223
2553116-0000	.CHECKER PLATE	2-221, 2-223
2553117-0000	.LEG	8-51, 8-53, 11-7, 11-9
2553118-0000	.TOE PLATE	2-221, 2-223
2553119-0000	.RAILING	2-221, 2-223
2553120-0000	.RAILING	2-221, 2-223
2553122-0000	.PLATE	2-215, 2-217, 2-221, 2-223
2553124-0000	.PIN	2-221, 2-223
2553125-0000	.CHECKER PLATE	2-221, 2-223
2553167-0000	.LID	1-263
2553272-0000	.SUPPORT BLOCK	8-185, 8-197
2553273-0000	.AXLE PIN	8-185, 8-197
2553275-0000	.SLIDE PLATE	8-179, 8-181, 8-189, 8-191
2553284-0000	.BLOCK	5-35, 5-37, 5-39, 5-95, 5-97
2553343-0000	.SUPPORT	5-13, 5-15
2553344-0000	.SUPPORT	5-13, 5-15
2553345-0000	.TIE ROD	5-13, 5-15
2553346-0000	.AXLE LINK	5-13, 5-15
2553347-0000	.FOLDING BAR	5-51, 5-53, 5-55
2553348-0000	.FOLDING BAR	5-51, 5-53, 5-55
2553615-0000	.FLAP	5-85, 5-87, 5-89
2553617-0000	.SLIDE	5-85, 5-87, 5-89
2553799-0000	.WASHER	8-185, 8-197
2555082-0000	.SPACER SCREW	5-105, 5-107, 5-115, 5-117, 5-119
2555393-0150	.START-UP KIT	10-3
2555394-0150	.START-UP KIT	10-9
2555404-0000	.FLAP	5-29, 5-31
2555613-0000	.BUSHING	1-135, 1-137
2555614-0000	.BRACKET	1-53, 1-55, 1-57
2555615-0000	.BRACKET	1-53, 1-55, 1-57
2555616-0000	.ROLLER	1-53, 1-55, 1-57
2555617-0000	.PIN	1-53, 1-55, 1-57
2555618-0000	.SHAFT	1-53, 1-55, 1-57
2555619-0000	.BRACKET	1-53, 1-55, 1-57
2555620-0000	.COVER	1-53, 1-55, 1-57
2555621-0000	.ROLLER	1-39, 1-41
2555622-0000	.ROLLER	1-39, 1-41
2555623-0000	.COVER	1-53, 1-55, 1-57
2555625-0000	.ROLL	1-53, 1-55, 1-57
2555627-0100	.PRESSURE ROLLER	1-23, 1-25
2555637-0000	.GUIDE	5-35, 5-37, 5-39, 5-95, 5-97
2556260-0200	.TOOLS AND TEMPLATES	11-3
2556261-0100	.ACCESSORIES	11-3
2556392-0100	.HOSE INSTALLATION	2-149, 2-151
2556496-0000	.CARRIAGE	8-97
2556497-0000	.CARRIAGE	8-97
2556499-0000	.BRACKET	8-97
2556503-0100	.PAPER BRAKE	8-97
2556504-0000	.BRACKET	8-99, 8-101
2556505-0002	.PIN	8-99, 8-101
2556505-0003	.PIN	8-99, 8-101
2556506-0000	.LINK	8-99, 8-101
2556507-0000	.LEVER	8-99, 8-101
2556508-0000	.BRACKET	8-99, 8-101
2556509-0000	.SHAFT	8-99, 8-101
2556510-0000	.BRACKET	8-99, 8-101
2556512-0000	.BRACKET	8-97
2556525-0000	.LEVER	5-289, 5-291, 5-293
2556526-0000	.LEVER	5-289, 5-291, 5-293
2556615-0000	..PIPE CONNECTION	4-247
2556893-0100	.TUBE FLUSHING	4-221
2556894-0000	.TUBE FLUSHING DEVICE	4-247
2556895-0000	.TUBE FLUSHING DEVICE	4-247
2557587-0000	.CABLE DUCT	9-97, 9-99
2557591-0000	.DIVIDER	9-77, 9-79, 9-81, 9-83, 9-85
2557594-0000	.RAIL	9-101
2557612-0000	.SPRING	4-27, 4-29, 4-39, 4-41
2557613-0000	.SPRING	4-27, 4-29, 4-39, 4-41
2558127-0000	.SPACER	5-115, 5-117, 5-119
2558145-0000	.FLAP	5-29, 5-31
2558146-0000	.CRADLE	5-301, 5-303
2558148-0000	.SLIDING STRIP	8-167
2558703-0000	.GUIDE UPPER L	5-105, 5-107

Part No	Description	Page No
2558704-0000	.GUIDE UPPER R	5-105, 5-107
2558754-0000	.RAIL	5-259, 5-261, 5-263, 5-265, 5-267, 5-269
2558826-0000	.PIPE	2-37
2558845-0200	.TANK	2-77
2558878-0000	.SIGN	8-133
2558879-0000	.SIGN	8-133
2558920-0000	.STOP	4-39, 4-41
2558921-0000	.STOP	4-27, 4-29
2558922-0000	.PARAGEMS	4-39, 4-41
2558923-0000	.PARAGEM	4-27, 4-29
2558929-0000	.BAR	4-27, 4-29, 4-39, 4-41
2558930-0100	.PUMP	2-77
2558933-0000	.RAIL	9-145, 9-147
2558934-0000	.RAIL	9-133
2558937-0000	.RAIL	9-155, 9-159
2558938-0000	.CABLE DUCT	9-149, 9-151
2558939-0000	.CABLE DUCT	9-149, 9-151
2558940-0000	.DIVIDER	9-149, 9-151
2558941-0000	.DIVIDER	9-149, 9-151
2558947-0200	.HYDRAULIC UNIT	2-73
2559008-0000	.VOLUME BULGE	5-231, 5-233, 5-235, 5-237, 5-239, 5-241
2559045-0003	.ELECTRODE	1-351
2559045-0004	.ELECTRODE	1-351
2559051-0000	.INSERT	1-285
2559061-0200	.UPPER FORMING RING	1-23, 1-25
2559062-0200	.LOWER FORMING RING	1-23, 1-25
2559063-0200	.LOWER FORMING RING	1-23, 1-25
2559064-0100	.SEAL	1-23, 1-25
2559066-0000	.STUD SCREW	1-11
2559095-0000	.BRACKET	1-265
2559102-0000	.RING	1-117, 1-119
2559103-0000	.PLATE	1-117, 1-119
2559104-0000	.PLATE	1-117, 1-119
2559111-0200	.HYDRAULIC VALVE	2-77
2559112-0100	.CALIBRATION EQUIPMENT	11-5
2559310-0000	.HYDRAULIC PIPE	2-85
2559311-0000	.HYDRAULIC PIPE	2-85
2559424-0000	.CUTTING JAW	4-155, 4-157, 4-159, 4-161
2559425-0000	.CLAMP HOLDER	4-129, 4-131, 4-133, 4-187, 4-189, 4-191
2559439-0000	.COUPLING BOLT	8-167
2559461-0000	.SPACER	2-37
2559976-0000	.BRACKET	2-37
2559977-0000	.HOSE	2-37
2559978-0000	.PIPE	2-37
2559986-0000	.SEALING PLATE	8-165
2559987-0000	.SEALING PLATE	8-165
2561206-0000	.SPACER	5-253, 5-255, 6-65, 6-71
2561232-0000	.COVER	6-71
2561244-0200	.DRIVE WHEEL	5-253, 5-255, 6-65
2561257-0000	.SPACER	6-71
2561267-0000	.SHAFT	5-257, 6-67
2561603-0000	.SPACER	6-71
2562307-0000	.PIPE	1-255
2562315-0000	.PLUG	1-255
2562551-0000	.SLIDE PLANE	8-161
2562552-0000	.BSLIDE PLANE	8-161
2562664-0000	.ROLL	1-125, 1-127
2562667-0002	.LOCK PLATE	1-125, 1-127
2562667-0008	.LOCK PLATE	1-47, 1-49, 1-105, 1-107, 1-109
2562667-0009	.LOCK PLATE	1-105, 1-107, 1-109
2562677-0000	.WASHER	1-15, 1-17
2562684-0000	.ROLL	1-125, 1-127
2562687-0000	.PLATE	1-61, 1-63, 1-65, 1-67, 1-69
2562688-0000	.RING	1-61, 1-63, 1-65, 1-67, 1-69
2562692-0000	.BRACKET	1-125, 1-127
2562693-0000	.BRACKET	1-125, 1-127
2562694-0000	.ROLLER	1-125, 1-127
2562695-0000	.ROLLER	1-125, 1-127
2562696-0000	.BRACKET	1-125, 1-127
2562697-0000	.BRACKET	1-125, 1-127
2562704-0000	.BODY	1-287
2562736-0001	.COAXIAL CABLE	4-299
2563166-0250	.CONNECTOR	9-49, 9-51
2563173-0000	.PROFILE	9-149, 9-151
2563174-0000	.PROFILE	9-149, 9-151
2563183-0000	.GUIDE RAIL	8-171, 8-173
2563274-0000	.CARRIER	5-289, 5-291, 5-293
2563276-0000	.PNEUMATIC DIAGRAM	1-353, 2-327
2563279-0000	.PIPE	1-319
2563281-0000	.PIPE	1-319
2563292-0000	.STOP PIN	1-245, 1-247, 1-249, 1-251
2563294-0000	.PRESSURE FLANGE	1-245, 1-247, 1-249, 1-251
2563666-0000	.CANTILEVER	4-27, 4-29, 4-39, 4-41
2563667-0000	.SHAFT	4-27, 4-29, 4-39, 4-41

Part No	Description	Page No
2563671-0000	.SHAFT	4-27, 4-29, 4-39, 4-41
2563759-0000	.SPRAY SYSTEM	1-325
2563760-0000	.EXTENSION	1-325
2563761-0000	.NUT	1-325
2563762-0000	.SPACER	1-325
2564074-0100	.TOOLS AND TEMPLATES	11-5
2564105-0000	.CONNECTION BOX	1-259
2564106-0100	.CONNECTION BOX	1-253
2564107-0000	.LID	1-319
2564232-0100	.LEG	8-35, 8-37, 8-39, 11-5
2564342-0000	.SPACER	2-31
2564347-0000	.FLAP	5-29, 5-31
2564545-0000	.PLATE	2-231, 2-233
2564546-0100	.PLATFORM	2-201, 2-203, 2-205, 2-207, 2-209, 2-211
2564561-0000	.PIPE	2-31
2564565-0000	.TOE PLATE	2-229
2564566-0000	.TOE PLATE	2-229
2564567-0000	.TOE PLATE	2-229
2564568-0000	.TOE PLATE	2-229
2564606-0000	.SUPPORT PLATE	1-257
2564623-0000	.HANDLE	8-97
2564630-0100	.CABLE DRAG CHAIN	8-97
2564632-0100	.VALVE PANEL	8-231, 8-233
2564633-0100	.VALVE PANEL	8-3, 8-5, 8-7, 8-9
2564634-0000	.BEARING BLOCK	8-231, 8-233
2564683-0000	.CURVE	4-231, 4-233, 4-235, 4-237
2564978-0000	.PIPE	2-31
2565424-0000	.ROLLER	1-75, 1-77, 1-79
2565425-0000	.COUNTER ROLLER	1-75, 1-77, 1-79
2565430-0000	.SUPPORT RING	1-105, 1-107, 1-109
2565431-0000	.SUPPORT RING	1-105, 1-107, 1-109
2565432-0100	.TERMINAL BLOCK	1-259
2565440-0000	.INDUCTOR	1-53, 1-55, 1-57
2565467-0000	.FLANGE	1-221
2565492-0000	.PNEUMATIC DIAGRAM	1-353
2565493-0000	.PNEUMATIC DIAGRAM	1-353, 2-327
2565494-0000	.PNEUMATIC DIAGRAM	1-353
2565513-0000	.ROLLER	1-75, 1-77, 1-79
2565526-0000	.PIPE	2-63
2565624-0350	.SOFTWARE	9-3, 9-5
2566117-0000	.CUTTING TABLE	8-179, 8-181, 8-189, 8-191
2566118-0000	.BRACKET	8-179, 8-181, 8-189, 8-191
2566123-0000	.SLIDE PLANE	8-167
2566124-0000	.SLIDE PLANE	8-167
2566127-0000	.SPACER	8-165
2566128-0000	.HOUSING	8-165
2566129-0000	.ADJUSTMENT ANGLE	8-165
2566130-0000	.PLATE	8-165
2566209-0000	.PLATE	2-37
2566210-0000	.PLATE	2-37
2566211-0000	.LABEL	2-37
2566212-0000	.LABEL	2-37
2566258-0000	.TOE PLATE	2-221, 2-223
2566317-0000	.CARRIER RULER	4-211, 4-213, 4-215, 4-217
2566318-0000	.CARRIER RULER	4-165, 4-167
2566319-0000	.FOLDING FLAP	4-165, 4-167, 4-211, 4-213, 4-215, 4-217
2566320-0000	.FOLDING FLAP	4-165, 4-167, 4-211, 4-213, 4-215, 4-217
2566321-0000	.FLAP	5-77, 5-79
2566323-0000	.FLAP	5-77, 5-79
2566327-0000	.CARRIER	4-199, 4-201
2566328-0000	.PLATE	4-143, 4-145, 4-199, 4-201
2566329-0000	.CARRIER	4-143, 4-145
2566330-0000	.SLEEVE	4-173
2566332-0000	.SHAFT	4-51, 4-53, 4-55, 4-57, 4-59, 4-65, 4-67, 4-69, 4-71, 4-73, 4-83, 4-85, 4-89, 4-91
2566333-0000	.HOLDER (STAFFA)	4-51, 4-53, 4-55, 4-57, 4-59, 4-65, 4-67, 4-69, 4-71, 4-73, 4-83, 4-85, 4-89, 4-91
2566336-0000	.BEARING HOUSING	4-127
2566338-0000	.CATCH	4-127
2566339-0000	.CATCH	4-155, 4-157, 4-159, 4-161
2566340-0000	.CARRIER	4-115, 4-117, 4-119, 4-121
2566341-0000	.CARRIER	4-175, 4-177, 4-179, 4-181
2569034-0000	.PIPE	2-83
2569035-0000	.PIPE	2-81
2569036-0000	.PIPE	2-79
2569037-0000	.PIPE	2-79
2569038-0000	.PIPE	2-81
2569039-0000	.PIPE	2-81
2569908-0000	.HOUSING	4-127
2569982-0100	.SETTING TOOL	11-5
2570004-0001	.CABLE	2-185, 2-187, 2-189, 2-191
2570017-0000	.PRESSURE FLANGE	1-245, 1-247, 1-249, 1-251
2570301-0000	.CUTTING JAW	4-155, 4-157, 4-159, 4-161
2570302-0000	.CLAMP HOLDER	4-129, 4-131, 4-133, 4-187, 4-189, 4-191
2570616-0100	.FASTENING PLATE	2-179
2570678-0000	.HANDLE	1-387, 1-389

Part No	Description	Page No
2570741-0000	.HOLDER	11-63
2570743-0000	.BRACKET	11-63
2570744-0000	.HOLDER	11-65
2570746-0000	.BRACKET	11-63
2570747-0000	.PLATE	11-63
2570821-0000	.SHEET	8-237, 8-239
2570836-0000	.PROTECTION PLATE	8-231, 8-233
2570848-0000	.HOLDER	4-129, 4-131, 4-133, 4-187, 4-189, 4-191
2570849-0000	.BUSHING	4-129, 4-131, 4-133, 4-155, 4-157, 4-159, 4-161, 4-187, 4-189, 4-191
2570850-0000	.CUTTING JAW	4-155, 4-157, 4-159, 4-161
2571843-0000	.CARRIER	4-143, 4-145
2572071-0000	.HOOD	1-245, 1-247, 1-249, 1-251
2572197-0000	.SPACER	4-93, 4-95, 4-97, 4-99, 4-103, 4-109, 4-113
2572248-0000	.CARRIER	4-199, 4-201
2572563-0000	.SUPPORT	5-313
2574401-0000	.FRAME	8-161
2574402-0000	.PRESSURE JAW	8-167
2574421-0000	.PIPE	2-27
2574483-0200	.TOOLS AND TEMPLATES	10-3
2575631-0000	.RAIL BRACKET	4-231, 4-233, 4-235, 4-237
2576244-0000	.BRACKET	8-255
2576245-0000	.ARM	8-255
2576334-0100	.TPOP DATA COLLECTION	9-3, 9-5
2576335-0100	.TPOP LINE SUPERVISION	9-3, 9-5
2576379-0000	.ROCKER ARM	8-243
2576396-0000	.PLATE	8-165
2578455-0000	.LIFTING HANDLE	8-243
2578486-0000	.BRACKET	1-351
2578785-0000	.PUSH BUTTON BOX	8-287, 8-289
2579687-0100	.SETTING TOOL	11-5
2579688-0000	.HOLDER	11-65
2579838-0000	.TOUCH GUARD	8-145
2579861-0003	.PIVOT BRACKET	7-19
2579988-0000	.CUTTING JAW	4-155, 4-157, 4-159, 4-161
2579989-0000	.HOLDER	4-129, 4-131, 4-133, 4-187, 4-189, 4-191
2579990-0000	.SHAFT	4-129, 4-131, 4-133, 4-155, 4-157, 4-159, 4-161, 4-187, 4-189, 4-191
2579991-0000	.HOLDER	4-129, 4-131, 4-133, 4-187, 4-189, 4-191
2579995-0100	.LAST POINT DE	5-3, 6-3
2579996-0000	.PLATE	8-33
2581994-0000	.VOLUME BULGE	4-7, 4-9, 4-11, 4-17, 4-19, 4-21, 4-51, 4-53, 4-55, 4-57, 4-59, 4-65, 4-67, 4-69, 4-71, 4-73
2582002-0000	.VOLUME FLAP	4-17, 4-19, 4-21
2582003-0100	.GUIDE RAIL	8-149, 8-151
2582020-0000	.RAIL BRACKET	4-231, 4-233, 4-235, 4-237
2582558-0000	.BASE PLATE	8-185, 8-197
2582559-0000	.RAIL	8-185, 8-197
2582576-0000	.STOP SCREW	1-223
2582590-0000	.PIPE	1-291
2582613-0000	.BRACKET	11-5
2582616-0000	.PLATE	1-117, 1-119
2582623-0000	.SEAL	1-117, 1-119
2582629-0000	.RING	1-117, 1-119
2582630-0000	.ROLLER	1-117, 1-119
2582651-0000	.AIR GUIDE	1-193, 1-195
2582652-0000	.AIR GUIDE	1-193, 1-195
2582654-0000	.PLATE	1-193, 1-195
2582655-0000	.HOLDER	1-193, 1-195
2582668-0000	.PLATE	8-171, 8-173
2587235-0000	.VOLUME FLAP	4-17, 4-19, 4-21
2587236-0000	.VOLUME FLAP	4-7, 4-9, 4-11
2587250-0000	.ARM	8-179, 8-181, 8-189, 8-191
2587251-0000	.ANGLE PIECE	8-179, 8-181, 8-189, 8-191
2587286-0000	.SUPPORT	11-19, 11-21
2587289-0000	.CHECKER PLATE	2-229
2587290-0000	.CHECKER PLATE	2-229
2587291-0000	.CHECKER PLATE	2-229
2587292-0000	.CHECKER PLATE	2-229
2587326-0000	.BRACKET	11-67
2587464-0000	.CANTILEVER	4-303
2587466-0000	.INDUCTOR	4-129, 4-131, 4-133, 10-15, 10-17, 10-19, 10-21, 10-23, 10-25
2587467-0000	.INDUCTOR	4-187, 4-189, 4-191, 10-15, 10-17, 10-19, 10-21, 10-23, 10-25
2588044-0000	.BRACKET	8-169
2588045-0000	.BRACKET	8-169
2588046-0000	.SHAFT	8-167, 8-169
2588067-0000	.SHAFT	8-247
2588127-0000	.AXLE PIN	5-17, 5-19
2588130-0100	.FOLDING FIN DEVICE	5-5, 5-7
2588134-0000	.YOKE	5-17, 5-19
2588216-0000	.GUIDE	5-115, 5-117, 5-119
2588217-0000	.GUIDE	5-115, 5-117, 5-119
2588218-0000	.STRUT	5-115, 5-117, 5-119
2588290-0000	.BRACKET	8-167
2588291-0000	.TIE ROD	4-143, 4-145, 4-199, 4-201
2588292-0000	.PLATE	4-155, 4-157, 4-159, 4-161

Part No	Description	Page No
2588293-0000	.HOLDER	4-129, 4-131, 4-133, 4-187, 4-189, 4-191
2588294-0000	.LID	4-127
2588295-0000	.SLEEVE	4-127
2588296-0000	.PISTON	4-127
2588297-0000	.SHAFT	4-127
2588299-0000	.BUSHING	4-155, 4-157, 4-159, 4-161
2588300-0000	.RAIL BRACKET	4-231, 4-233, 4-235, 4-237
2588301-0000	.CURVE	4-231, 4-233, 4-235, 4-237
2588302-0000	.VOLUME CAM	4-231, 4-233, 4-235, 4-237
2588303-0000	.SCREW	4-155, 4-157, 4-159, 4-161
2588304-0000	.VOLUME FLAP	4-83, 4-85
2588305-0000	.VOLUME FLAP	4-89, 4-91
2588306-0000	.VOLUME FLAP	4-81
2588307-0000	.VOLUME FLAP	4-81
2588327-0000	.INSERT	5-77, 5-79
2588328-0000	.PULLEY	5-283
2588329-0000	.PULLEY	5-283
2588379-0100	.MATERIAL HOLDER	8-189, 8-191
2588383-0100	.MATERIAL HOLDER	8-179, 8-181
2588422-0100	.MATERIAL HOLDER L1	8-3, 8-5, 8-7, 8-9
2588423-0100	.MATERIAL HOLDER L2	8-3, 8-5, 8-7, 8-9
2588425-0000	.PLATE	11-45
2588426-0100	.ALIGNMENT TEMPLATE	11-5
2588946-0100	.SPLICING DEVICE	8-3, 8-5, 8-7, 8-9
2588947-0000	.SHIMS	8-165
2588948-0000	.SHIMS	8-165
2589104-0100	.FRAME	8-149, 8-151
2589105-0100	.DRIVE UNIT	8-149, 8-151
2589106-0100	.HEATING UNIT	8-149, 8-151
2589109-0000	.TOOTHED PULLEY	8-163
2589110-0000	.SHAFT	8-163
2589111-0000	.FLANGE	8-163
2589112-0000	.FLANGE	8-163
2589113-0000	.SHAFT	8-163
2589114-0000	.SHAFT	8-163
2589115-0000	.COVER	8-163
2589119-0000	.NUT	8-161
2589786-0000	.BRACKET	8-265
2589787-0000	.FITTING	8-265
2589791-0000	.KNIFE HOLDER	8-179, 8-181, 8-189, 8-191
2589960-3353	.SLIDING STRIP	6-65
2589960-3354	.SLIDING STRIP	6-65
2591680-0100	.HOLDER	8-257, 8-259, 8-261, 8-263
2591782-0000	.SPRING	1-343
2591790-0000	.BLOCK	5-5, 5-7
2592530-0000	.PLATE	1-161, 1-163
2592539-0000	.ROLLER	1-31, 1-33
2592540-0000	.ROLLER	1-31, 1-33
2592545-0000	.ROLLER	1-47, 1-49
2592546-0000	.ROLLER	1-61, 1-63, 1-65, 1-67, 1-69
2592547-0000	.ROLLER	1-61, 1-63, 1-65, 1-67, 1-69
2592548-0000	.ROLLER	1-61, 1-63, 1-65, 1-67, 1-69
2592549-0000	.ROLLER	1-61, 1-63, 1-65, 1-67, 1-69
2592550-0100	.FORMING RING	1-23, 1-25
2592567-0100	.PRESSURE JAW	8-149, 8-151
2592568-0100	.BAR CODE READER	8-149, 8-151
2592780-0000	.DOLLY	8-167, 10-9
2593831-0100	.VOLUME KIT	10-9
2593838-0000	.HATCH	8-281, 8-283
2593851-0100	.EMERGENCY STOP	2-269, 2-325
2593982-0000	.PUSH BUTTON BOX	8-287, 8-289
2594043-0000	.SHOCK ABSORBER	1-287
2594054-0100	.INDEXING UNIT	5-3
2594058-0000	.GUIDE	5-131, 5-133, 5-135
2594125-0000	.SLEEVE	1-343
2594126-0000	.GUIDE ROLLER	1-343
2594393-0000	.PNEUMATIC DIAGRAM	2-327
2594512-0101	.VOLUME FLAP	10-11, 10-13
2594512-0102	.VOLUME FLAP	10-11, 10-13
2594512-0103	.VOLUME FLAP	10-11, 10-13
2594512-0104	.VOLUME FLAP	10-11, 10-13
2594512-0105	.VOLUME FLAP	10-11, 10-13
2594512-0106	.VOLUME FLAP	10-11, 10-13
2594512-0107	.VOLUME FLAP	10-11, 10-13
2594512-0108	.VOLUME FLAP	10-11, 10-13
2594512-0109	.VOLUME FLAP	10-11, 10-13
2594512-0110	.VOLUME FLAP	10-11, 10-13
2594512-0111	.VOLUME FLAP	10-11, 10-13
2594512-0200	.VOLUME FLAP	4-5
2594512-0201	.VOLUME FLAP	10-11, 10-13
2594512-0202	.VOLUME FLAP	10-11, 10-13
2594567-0000	.PIPE	2-347
2594589-0000	.BRACKET	2-347
2594596-0000	.BRACKET	1-123

Part No	Description	Page No
2594601-0000	.RAIL	1-193, 1-195
2594606-0100	.STERILE AIR PIPE	1-203, 1-205
2594621-0000	.WASHER	1-199
2594624-0000	.PLUG	1-155, 1-157
2594636-0000	.BRACKET	1-53, 1-55, 1-57
2594644-0000	.ROLLER	1-75, 1-77, 1-79
2594646-0000	.PIPE	2-125
2594647-0000	.PIPE	2-125
2594702-0000	.SHAFT	4-101, 4-105, 4-107, 4-111
2594709-0000	.AXLE PIN	4-63, 4-77, 4-107, 4-111
2594712-0000	.CARRIER	4-115, 4-117, 4-119, 4-121
2594714-0000	.CARRIER	4-143, 4-145
2594715-0000	.CARRIER	4-175, 4-177, 4-179, 4-181
2594717-0000	.CARRIER	4-199, 4-201
2594886-0000	.PLATE	5-301, 5-303, 6-5, 6-7
2594887-0000	.SPACER	4-231, 4-233, 4-235, 4-237
2594888-0000	.VOLUME BULGE	4-83, 4-85, 4-89, 4-91
2594889-0000	.VOLUME BULGE	4-81
2594890-0000	.VOLUME SHIM	4-83, 4-85, 4-89, 4-91, 10-15, 10-17, 10-19, 10-21, 10-23, 10-25
2594891-0000	.VOLUME SHIM	4-81, 10-15, 10-17, 10-19, 10-21, 10-23, 10-25
2594892-0000	.SPRING	4-127
2594893-0000	.WEDGE	4-83, 4-85, 4-89, 4-91
2594896-0000	.SCREW	4-81
2594902-0000	.CATCH	5-231, 5-233, 5-235, 5-237, 5-239, 5-241
2594905-0000	.SLIDE	5-153, 5-155
2594906-0000	.SLIDE	5-161, 5-163
2594911-0000	.HATCH	5-289, 5-291, 5-293
2595704-0000	.FOLDING PART	5-115, 5-117, 5-119
2595705-0000	.FOLDING PART	5-115, 5-117, 5-119
2595706-0000	.BRACKET	5-115, 5-117, 5-119
2595707-0000	.FOLDING PART	5-115, 5-117, 5-119
2595708-0000	.FOLDING PART	5-115, 5-117, 5-119
2595709-0000	.FOLDING PART	5-115, 5-117, 5-119
2597324-0100	.VOLUME FLAP	4-5
2597325-0100	.VOLUME FLAP	4-5
2597329-0100	.CURVE UNIT	4-221
2597531-0000	.FLOAT	1-245, 1-247, 1-249, 1-251
2597600-0000	.BUSHING	8-23
2597768-0000	.BRACKET	5-131, 5-133, 5-135
2597769-0000	.GUIDE	5-131, 5-133, 5-135
2598017-0000	.PRESSURE FLANGE	1-245, 1-247, 1-249, 1-251
2598025-0000	.SIGN	2-161, 2-163, 2-165
2598065-0000	.SUPPORT	4-303
2598067-0000	.SHAFT	4-307
2598084-0000	.PLATE	1-255
2598085-0000	.SPACER	1-255
2598485-0000	.CLAMP	5-131, 5-133, 5-135
2598486-0000	.CLAMP	5-131, 5-133, 5-135
2598487-0000	.SLIDE	5-153, 5-155
2598488-0000	.SLIDE	5-161, 5-163
2598491-0000	.FOLDING PART	5-115, 5-117, 5-119
2598492-0000	.FOLDING PART	5-115, 5-117, 5-119
2598493-0000	.BRACKET	5-115, 5-117, 5-119
2598494-0000	.FOLDING PART	5-115, 5-117, 5-119
2598495-0000	.FOLDING PART	5-115, 5-117, 5-119
2598496-0000	.FOLDING PART	5-115, 5-117, 5-119
2598497-0000	.FOLDING PART	5-115, 5-117, 5-119
2598498-0000	.NOZZLE	5-199, 5-201, 5-203, 5-205, 5-207, 5-209
2598499-0000	.NOZZLE	5-199, 5-201, 5-203, 5-205, 5-207, 5-209
2598500-0000	.NOZZLE	5-199, 5-201, 5-203, 5-205, 5-207, 5-209
2598502-0000	.SUPPORT	4-309
2598503-0000	.EXTENSION	5-199, 5-201, 5-203, 5-205, 5-207, 5-209
2598508-0100	.INFEED/OUTFEED CONVEYOR	5-247, 5-249, 5-251
2598513-0000	.SPACER	5-277
2598514-0000	.COVER	5-277
2598689-0000	.HOSE	2-23
2598706-0000	.BAR	5-5, 5-7
2598820-0000	.SPACER	5-137, 5-139, 5-141, 5-143
2598822-0000	.GUIDE PIN	5-115, 5-117, 5-119
2598823-0000	.GUIDE PIN	5-115, 5-117, 5-119
2598844-0000	.COVER	2-63
2598880-0000	.SETTING SCREW	5-21, 5-23
2598890-0000	.AXLE PIN	5-25, 5-27
2598967-0000	.SPACER	5-199, 5-201, 5-203, 5-205, 5-207, 5-209
2598986-0000	.RAIL	5-115, 5-117, 5-119
2598987-0000	.RAIL	5-115, 5-117, 5-119
2599044-0000	.BRACKET	5-131, 5-133, 5-135
2599738-0000	.ECCENTRIC	4-231, 4-233, 4-235, 4-237
2599739-0000	.ECCENTRIC	4-231, 4-233, 4-235, 4-237
2599741-0000	.SUPPORT	4-307
2599742-0000	.SHAFT	4-305, 4-307
2599743-0000	.SHAFT	4-307
2599847-0000	.SPACER	5-115, 5-117, 5-119
2599941-0000	.SPACER	2-215, 2-217, 2-221, 2-223, 8-41, 8-43, 8-45, 8-111, 8-113

Part No	Description	Page No
2600978-0000	.CABLE	11-89
2601230-0000	.BRACKET	9-149, 9-151
2601232-0000	.FRAME	9-149, 9-151
2601237-0000	.BENDING ROLLER	1-135, 1-137
2601240-0000	.ROLLER	1-47, 1-49
2601247-0000	.INDUCTOR	1-53, 1-55, 1-57
2601249-0000	.BRACKET	1-53, 1-55, 1-57
2601269-0000	.ROLLER	1-125, 1-127
2601271-0000	.ROLLER	1-125, 1-127
2601272-0000	.ROLLER	1-125, 1-127
2601273-0000	.ROLLER	1-125, 1-127
2601278-0000	.ROLLER	1-105, 1-107, 1-109
2601279-0000	.ROLLER	1-105, 1-107, 1-109
2601284-0000	.LEVER	1-199
2601285-0000	.ROLLER	1-105, 1-107, 1-109
2601286-0000	.ROLLER	1-71, 1-73, 1-105, 1-107, 1-109
2601289-0000	.INDUCTOR	1-53, 1-55, 1-57
2601308-0000	.ROLLER	1-75, 1-77, 1-79
2601309-0000	.ROLLER	1-75, 1-77, 1-79
2601327-0000	.ROLLER	1-75, 1-77, 1-79
2601328-0000	.ROLLER	1-31, 1-33, 1-75, 1-77, 1-79
2601333-0000	.ROLLER	1-87, 1-89, 1-91, 1-93
2601334-0000	.ROLLER	1-87, 1-89, 1-91, 1-93
2601445-0000	.FOLDING PART	5-115, 5-117, 5-119
2601455-0000	.FOLDING PART	5-115, 5-117, 5-119
2601464-0000	.FOLDING PART	5-115, 5-117, 5-119
2601465-0000	.FOLDING PART	5-115, 5-117, 5-119
2601468-0000	.PRESSURE FLANGE	1-245, 1-247, 1-249, 1-251
2601469-0000	.PRESSURE FLANGE	1-245, 1-247, 1-249, 1-251
2601470-0000	.PRESSURE FLANGE	1-245, 1-247, 1-249, 1-251
2601472-0000	.PRESSURE FLANGE	1-245, 1-247, 1-249, 1-251
2601474-0000	.PRESSURE FLANGE	1-245, 1-247, 1-249, 1-251
2601483-0100	.PAPER GUIDE	1-341
2601580-0000	.HOSE	9-173
2601581-0000	.HOSE	9-173
2601582-0000	.HOSE	9-173
2602592-0000	.FOLDING PART	5-115, 5-117, 5-119
2602613-0000	.VOLUME BULGE	5-231, 5-233, 5-235, 5-237, 5-239, 5-241
2602614-0000	.BOTTOM	5-29, 5-31
2602652-0000	.SHAFT	4-309
2602655-0000	.ROLLER	4-243, 4-245
2602657-0000	.LOCK PLATE	4-305
2602658-0000	.SHAFT	4-305
2602990-0000	.SHEET	8-13
2602991-0000	.ROD	8-15
2602992-0000	.ROD	8-15
2602993-0000	.LEVER	8-31
2602994-0000	.BRACKET	8-31
2602995-0000	.AXLE	8-31
2603138-0000	.BRACKET	5-131, 5-133, 5-135
2603140-0000	.GUIDE	5-131, 5-133, 5-135
2603147-0000	.PLATE	5-115, 5-117, 5-119
2603148-0000	.CLAMP	5-131, 5-133, 5-135
2603151-0000	.SHIM	4-143, 4-145, 4-199, 4-201
2603374-0000	.ECCENTRIC	4-227, 4-229
2603376-0000	.AXLE PIN	4-227, 4-229
2603378-0000	.ROLLER	4-227, 4-229
2603387-0000	.SPACER	2-37
2603488-0000	.FLAP	5-85, 5-87, 5-89
2603489-0000	.BOTTOM	5-85, 5-87, 5-89, 10-11, 10-13
2603490-0000	.SLIDE	5-85, 5-87, 5-89
2603546-0000	.SLIDE PLATE	1-193, 1-195
2603547-0000	.FOLDING PART	5-115, 5-117, 5-119
2603548-0000	.FOLDING PART	5-115, 5-117, 5-119
2603630-0000	.SLIDE PLATE	1-193, 1-195
2603659-0000	.FOLDING PART	5-115, 5-117, 5-119
2603660-0000	.FOLDING PART	5-115, 5-117, 5-119
2603661-0000	.BRACKET	5-115, 5-117, 5-119
2603662-0000	.BRACKET	5-115, 5-117, 5-119
2603663-0000	.SPACER	5-41, 5-43, 5-51, 5-53, 5-55, 5-105, 5-107
2603664-0000	.RAIL	5-115, 5-117, 5-119
2603823-0000	.BOTTOM PLATE	1-193, 1-195
2603824-0000	.COUNTER PLATE	1-193, 1-195
2603826-0100	.FOLDING PART	5-93
2603827-0100	.FLAP GUIDE	5-93
2604069-0000	.BRACKET	7-7
2604493-0000	.VOLUME FLAP	4-51, 4-53, 4-55, 4-57, 4-59
2604494-0000	.VOLUME FLAP	4-65, 4-67, 4-69, 4-71, 4-73
2604495-0000	.VOLUME FLAP	4-51, 4-53, 4-55, 4-57, 4-59
2604496-0000	.VOLUME FLAP	4-65, 4-67, 4-69, 4-71, 4-73
2604539-0000	.PROTRACTOR	5-211
2604564-0000	.CUTTING JAW	4-155, 4-157, 4-159, 4-161
2604565-0000	.HOLDER	4-129, 4-131, 4-133, 4-187, 4-189, 4-191
2605066-0000	.CURVE	4-223, 4-225

Part No	Description	Page No
2605125-0000	.PUSHER	5-231, 5-233, 5-235, 5-237, 5-239, 5-241
2605166-0000	.VOLUME SHIM	4-51, 4-53, 4-55, 4-57, 4-59, 4-65, 4-67, 4-69, 4-71, 4-73, 10-15, 10-17, 10-19, 10-21, 10-23, 10-25
2605191-0000	.VOLUME FLAP	4-51, 4-53, 4-55, 4-57, 4-59
2605192-0000	.VOLUME FLAP	4-65, 4-67, 4-69, 4-71, 4-73
2605213-0000	.RAIL	5-115, 5-117, 5-119
2605226-0200	.ROLLER UNIT	4-223, 4-225
2605228-0100	.BENDING ROLLER	8-241
2605869-0000	.FLAP HOLDER	4-51, 4-53, 4-55, 4-57, 4-59, 4-65, 4-67, 4-69, 4-71, 4-73
2605875-0000	.FOLDING FLAP	4-165, 4-167, 4-211, 4-213, 4-215, 4-217
2605876-0000	.FOLDING FLAP	4-165, 4-167, 4-211, 4-213, 4-215, 4-217
2605877-0000	.BENDING ROLLER	2-11, 8-57
2605879-0000	.CANTILEVER	2-11
2605880-0000	.SHAFT	2-11
2605993-0000	.SIDE PLATE	5-301, 5-303, 6-5, 6-7, 10-11, 10-13
2605994-0000	.SIDE PLATE	5-301, 5-303, 6-5, 6-7, 10-11, 10-13
2606215-0000	.BRACKET	9-49, 9-51
2606216-0000	.BRACKET	9-149, 9-151
2606218-0000	.CAM	4-51, 4-53, 4-55, 4-57, 4-59, 4-65, 4-67, 4-69, 4-71, 4-73
2606277-0000	.FOLDING DEVICE	5-13, 5-15
2606278-0000	.FOLDING DEVICE	5-13, 5-15
2606289-0000	.BOTTOM	5-29, 5-31
2606305-0000	.VOLUME FLAP	4-7, 4-9, 4-11
2606306-0000	.VOLUME FLAP	4-17, 4-19, 4-21
2606891-0000	.ECCENTRIC	4-231, 4-233, 4-235, 4-237
2606892-0000	.ECCENTRIC	4-231, 4-233, 4-235, 4-237
2607087-0000	.BOTTOM PLATE	1-193, 1-195
2607089-0000	.PRESSURE ROLLER	1-245, 1-247, 1-249, 1-251, 10-15, 10-17, 10-19, 10-21, 10-23, 10-25
2607440-0000	.SLIDE PLATE	1-193, 1-195
2608103-0000	.BRACKET	2-37
2608104-0000	.BRACKET	2-37
2608106-0000	.BRACKET	9-19, 9-49, 9-51
2608107-0000	.BRACKET	9-49, 9-51
2608177-0000	.SIGN	2-309, 2-319, 8-95, 9-19, 9-35, 9-43, 9-49, 9-51, 9-63, 9-65, 9-67, 9-69, 9-105, 9-111, 9-113, 9-123, 9-125, 9-135, 9-137, 9-149, 9-151
2608187-0000	.BRACKET	9-45
2608273-0000	.HOLDER	2-243, 2-245, 2-247
2608274-0000	.PIPE	2-243, 2-245, 2-247
2609303-0000	.WEIGHT	8-251, 8-253
2609365-0000	.HOLDER	2-243, 2-245, 2-247
2609368-0000	.TIE ROD	5-13, 5-15
2609369-0000	.FOLDING BAR	5-51, 5-53, 5-55
2609370-0000	.FOLDING BAR	5-51, 5-53, 5-55
2609371-0000	.SPACER	5-51, 5-53, 5-55
2609372-0000	.GUIDE	5-95, 5-97
2609923-0000	.WASHER	4-227, 4-229
2609925-0000	.VOLUME BULGE	4-51, 4-53, 4-55, 4-57, 4-59, 4-65, 4-67, 4-69, 4-71, 4-73
2610764-0000	.PLATE	5-307, 5-313, 5-315
2610779-0000	.BLOCK	5-5, 5-7
2610793-0000	.BLOCK	4-223, 4-225
2610954-0000	.RAIL	4-129, 4-131, 4-133
2610955-0000	.RAIL	4-187, 4-189, 4-191
2610956-0000	.INDUCTOR	4-129, 4-131, 4-133, 4-187, 4-189, 4-191, 10-15, 10-17, 10-19, 10-21, 10-23, 10-25
2611000-0000	.CUTTING JAW	4-155, 4-157, 4-159, 4-161
2611001-0000	.CLAMP HOLDER	4-129, 4-131, 4-133, 4-187, 4-189, 4-191
2611009-0000	.SHAFT	1-199
2611012-0000	.ROLLER	1-87, 1-89, 1-91, 1-93
2611016-0000	.ROLLER	1-87, 1-89, 1-91, 1-93
2611017-0000	.ROLLER	1-39, 1-41, 1-87, 1-89, 1-91, 1-93
2611020-0000	.ROLLER	1-87, 1-89, 1-91, 1-93
2611024-0000	.SPACER	1-87, 1-89, 1-91, 1-93
2611025-0000	.ROLLER	1-105, 1-107, 1-109
2611026-0000	.ROLLER	1-105, 1-107, 1-109
2611027-0000	.ROLLER	1-105, 1-107, 1-109
2611028-0000	.SUPPORT ROLLER	1-105, 1-107, 1-109
2611038-0000	.SUPPORT RING	1-105, 1-107, 1-109
2611039-0000	.ROLLER	1-113, 1-115
2611040-0000	.ROLLER	1-113, 1-115
2611041-0000	.SUPPORT ROLLER	1-113, 1-115
2611046-0000	.PLATE	1-117, 1-119
2611047-0000	.RING	1-117, 1-119
2611051-0000	.PIPE	1-317
2611053-0000	.INDUCTOR	1-53, 1-55, 1-57
2611064-0001	.ROLLER	1-87, 1-89, 1-91, 1-93
2611065-0001	.ROLLER	1-87, 1-89, 1-91, 1-93
2611066-0000	.ROLLER	1-87, 1-89, 1-91, 1-93
2611067-0000	.ROLLER	1-87, 1-89, 1-91, 1-93
2611068-0000	.ROLLER	1-87, 1-89, 1-91, 1-93
2611069-0001	.ROLLER	1-75, 1-77, 1-79
2611070-0000	.COUNTER ROLLER	1-75, 1-77, 1-79
2611457-0000	.CABLE DUCT	8-199, 8-201
2611458-0000	.CABLE DUCT	8-199, 8-201
2611459-0000	.CABLE DUCT	8-199, 8-201
2611460-0000	.CABLE DUCT	8-199, 8-201

Part No	Description	Page No
2611461-0000	.CABLE DUCT	8-199, 8-201
2611462-0100	.TERMINAL BLOCK	8-199, 8-201
2611463-0100	.TERMINAL BLOCK	8-199, 8-201
2611464-0000	.RAIL	8-219, 8-221
2611465-0000	.RAIL	8-227, 8-229
2611655-0000	.CLAMP HOLDER	4-129, 4-131, 4-133, 4-187, 4-189, 4-191
2611710-0000	.CUTTING JAW	4-155, 4-157, 4-159, 4-161
2611875-0000	.SHIM	5-231, 5-233, 5-235, 5-237, 5-239, 5-241
2612738-0000	.BUSHING	4-155, 4-157, 4-159, 4-161
2612745-0000	.BEARING HOUSING	4-127
2612747-0000	.COVER	4-143, 4-145, 4-199, 4-201
2612750-0000	.SPACER	4-231, 4-233, 4-235, 4-237
2613033-0000	.MACHINE BODY	7-49
2613034-0100	.MACHINE BODY	7-3, 7-5
2613644-0100	.CANTILEVER	4-301
2613645-0100	.CURVE UNIT	4-221
2613646-0100	.VOLUME ADJUSTER	4-257
2613647-0100	.VOLUME CURVE PIECE	4-5
2613648-0100	.SUPPORT ROLLER	4-221
2613749-0100	.COVER	8-3, 8-5, 8-7, 8-9
2613763-0000	.SLEEVE	4-223, 4-225
2613764-0000	.SLEEVE	4-223, 4-225, 4-231, 4-233, 4-235, 4-237
2613809-0000	.SPACER	4-223, 4-225
2614038-0000	.SPACER	4-307
2614039-0000	.CLAMP	4-303
2614371-0000	.ROLLER BRACKET	4-223, 4-225
2614372-0000	.SLEEVE	4-223, 4-225, 4-231, 4-233, 4-235, 4-237
2614373-0000	.ROLLER BRACKET	4-223, 4-225
2614376-0001	.WASHER	4-223, 4-225, 4-231, 4-233, 4-235, 4-237
2614376-0002	.WASHER	4-223, 4-225, 4-231, 4-233, 4-235, 4-237
2615463-0100	.FLUSHING DEVICE	2-237
2616034-0000	.COVER PLATE	8-237, 8-239
2616217-0000	.BOTTOM	5-91
2616218-0000	.BOTTOM	5-91, 10-11, 10-13
2616219-0000	.BOTTOM	5-91, 10-11, 10-13
2616221-0000	.BRACKET	4-259
2616224-0200	.PHOTOCELL UNIT	4-5
2616225-0000	.CLAMP	4-259
2616227-0000	.TIMING BELT	5-283
2616229-0000	.BLOCK	5-5, 5-7
2616236-0000	.WASHER	1-143, 1-145
2616237-0000	.CONNECTION	1-143, 1-145
2616238-0000	.HOLDER	1-143, 1-145
2616239-0000	.HOLDER	1-143, 1-145
2616240-0000	.PIPE	1-143, 1-145
2616298-0000	.BRACKET	1-291
2618259-0000	.SPACER	4-223, 4-225, 4-231, 4-233, 4-235, 4-237
2618302-0000	.PIVOT PIN	4-223, 4-225, 4-231, 4-233, 4-235, 4-237
2618329-0000	.PLATE	4-309
2618330-0000	.HANDLE	4-309
2618332-0000	.SHAFT	4-309
2618333-0000	.PLATE	4-309
2618377-0000	.ECCENTRIC	4-223, 4-225, 4-231, 4-233, 4-235, 4-237
2618378-0000	.ECCENTRIC	4-223, 4-225, 4-231, 4-233, 4-235, 4-237
2618424-0000	.SUPPORT	5-35, 5-37, 5-39
2618425-0000	.GUIDE	5-35, 5-37, 5-39
2618683-0000	.SPACER	5-199, 5-201, 5-203, 5-205, 5-207, 5-209
2619170-0000	.PLATE	9-53
2619171-0000	.PLATE	1-161, 1-163
2619198-0000	.SHAFT	4-243, 4-245
2619199-0000	.ROLLER	4-243, 4-245
2619200-0000	.PLATE	4-243, 4-245
2619210-0000	.SPACER	5-277
2619211-0000	.SPACER	5-277
2619212-0000	.SPACER	5-277
2619213-0000	.SPACER	5-277
2619319-0000	.SHAFT	4-243, 4-245
2619384-0000	.HOLDER	5-115, 5-117, 5-119
2619528-0000	.LOCKING CIRCLIP	5-21, 5-23
2619529-0000	.SLEEVE	5-21, 5-23
2619530-0000	.SLEEVE	5-21, 5-23
2619531-0000	.SHAFT	5-21, 5-23
2619574-0000	.SPACER	5-137, 5-139, 5-141, 5-143
2619584-0100	.STRUT	5-17, 5-19
2619589-0000	.HANDLE	5-17, 5-19
2619591-0000	.SLIDER	5-25, 5-27
2619592-0000	.HOLDER	5-17, 5-19
2619596-0000	.HANDLE	5-21, 5-23
2619597-0100	.FLAP GUIDE	5-17, 5-19
2619598-0100	.FLAP GUIDE	5-17, 5-19
2619607-0000	.COVER	1-419
2619703-0000	.SPACER	5-115, 5-117, 5-119
2619727-0000	.GUIDE	5-161, 5-163
2619728-0000	.GUIDE	5-153, 5-155

Part No	Description	Page No
2623513-0000	.BUSHING	4-307
2623712-0000	.HANGER	7-9
2623713-0000	.HOLDER	7-9
2623714-0100	.PEROXIDE REDUCER	7-3, 7-5
2623715-0000	.HOLDER	7-7
2623717-0000	.HOLDER	7-7
2623718-0100	.PEROXIDE REDUCER	7-3, 7-5
2623719-0000	.HOLDER	7-9
2623720-0000	.HOLDER	7-9
2623721-0100	.PEROXIDE REDUCER	2-17, 2-19
2623783-0000	.PLATE	4-243, 4-245
2623883-0000	.BRACKET	8-97
2623884-0000	.PLATE	8-97
2624539-0000	.PIPE	2-21
2624543-0000	.SPACER	4-231, 4-233, 4-235, 4-237
2624544-0000	.PIVOT PIN	4-231, 4-233, 4-235, 4-237
2624549-0100	.POWER SUPPLY UNIT	9-49, 9-51
2624550-0000	.RAIL	9-53
2624551-0200	.CONNECTION DEVICE	9-49, 9-51
2624554-0000	.FOLDING FLAP	4-165, 4-167, 4-211, 4-213, 4-215, 4-217
2624555-0000	.FOLDING FLAP	4-165, 4-167, 4-211, 4-213, 4-215, 4-217
2628598-0000	.SPACER	4-231, 4-233, 4-235, 4-237
2628989-0000	.BRACKET	8-177
2628990-0000	.BRACKET	8-177
2629236-0000	.CAM	4-51, 4-53, 4-55, 4-57, 4-59, 4-65, 4-67, 4-69, 4-71, 4-73
2629237-0000	.CAM	4-51, 4-53, 4-55, 4-57, 4-59, 4-65, 4-67, 4-69, 4-71, 4-73
2629239-0000	.TUBE FLUSHING DEVICE	4-247
2629240-0000	.TUBE FLUSHING DEVICE	4-247
2629303-0000	.COVERING PLATE	5-95, 5-97
2629315-0100	.PAPER BRAKE	8-97
2629336-0000	.BOTTOM	5-85, 5-87, 5-89
2629338-0000	.GUIDE RAIL	8-97
2629344-0000	.SPACER	5-115, 5-117, 5-119
2630482-0000	.BRACKET	11-19, 11-21
2632534-0000	.HATCH	8-297, 8-299
2632535-0000	.CONNECTION BOX	8-279, 8-301
2632536-0100	.CONTROL PANEL	8-297, 8-299
2632542-0000	.HATCH	8-275, 8-277
2632543-0100	.CONTROL PANEL	8-275, 8-277
2632578-0000	.PLATE	2-213
2632642-0200	.NOZZLE UNIT	1-279, 1-281
2632817-0000	.PLATE	4-243, 4-245
2632818-0000	.SHAFT	4-243, 4-245
2633186-0200	.SOFTWARE TPOP	9-11
2633187-0200	.SOFTWARE TMCC	9-11
2633188-0200	.SOFTWARE PLC	9-11
2633438-0000	.SPACER	4-231, 4-233, 4-235, 4-237
2633439-0000	.PIPE	5-323, 5-325
2633440-0000	.PIPE	5-323, 5-325
2633441-0000	.BRACKET	5-323, 5-325
2634515-0000	.CANTILEVER	4-27, 4-29, 4-39, 4-41
2634524-0000	.PRESSURE FLANGE	1-245, 1-247, 1-249, 1-251
2634536-0000	.SUPPORT	2-293
2634894-0000	.FLANGE	5-211
2634917-0000	.SIGN	1-375
2634926-0000	.SUPPORT ROLLER	1-105, 1-107, 1-109
2634930-0000	.SUPPORT ROLLER	1-125, 1-127
2634931-0000	.BRACKET	1-125, 1-127
2634932-0000	.BRACKET	1-71, 1-73
2634933-0000	.BRACKET	1-71, 1-73
2634934-0000	.SHAFT	1-71, 1-73
2634943-0000	.ROLLER	1-113, 1-115
2634947-0000	.ROLLER	1-87, 1-89, 1-91, 1-93
2634948-0000	.ROLLER	1-87, 1-89, 1-91, 1-93
2634949-0000	.ROLLER	1-87, 1-89, 1-91, 1-93
2634953-0000	.ROLLER	1-87, 1-89, 1-91, 1-93
2634954-0000	.ROLLER	1-87, 1-89, 1-91, 1-93
2634955-0000	.ROLLER	1-87, 1-89, 1-91, 1-93
2634956-0000	.ROLLER	1-87, 1-89, 1-91, 1-93
2634957-0000	.ROLLER	1-87, 1-89, 1-91, 1-93
2634958-0000	.ROLLER	1-87, 1-89, 1-91, 1-93
2634967-0000	.SUPPORT RING	1-105, 1-107, 1-109
2634968-0000	.ROLLER	1-105, 1-107, 1-109
2634969-0000	.ROLLER	1-105, 1-107, 1-109
2634970-0000	.ROLLER	1-105, 1-107, 1-109
2634971-0000	.ROLLER	1-105, 1-107, 1-109
2634972-0000	.SHAFT	1-245, 1-247, 1-249, 1-251
2634983-0000	.ROLLER	1-87, 1-89, 1-91, 1-93
2634984-0000	.ROLLER	1-87, 1-89, 1-91, 1-93
2634985-0000	.ROLLER	1-87, 1-89, 1-91, 1-93
2634987-0000	.SPACER	1-87, 1-89, 1-91, 1-93
2634988-0000	.ROLLER	1-87, 1-89, 1-91, 1-93
2634989-0000	.ROLLER	1-87, 1-89, 1-91, 1-93
2634990-0000	.ROLLER	1-87, 1-89, 1-91, 1-93

Part No	Description	Page No
2634995-0000	.FLOAT	1-245, 1-247, 1-249, 1-251
2634997-0000	.GASKET	1-15, 1-17
2635131-0150	.CABLE SET	9-3, 9-5
2635167-0000	.VOLUME BULGE	5-231, 5-233, 5-235, 5-237, 5-239, 5-241
2636399-0000	.FLAP	5-85, 5-87, 5-89
2636400-0000	.BOTTOM	5-85, 5-87, 5-89
2636401-0000	.SLIDE	5-85, 5-87, 5-89
2637599-0100	.ALIGNMENT TOOL	11-5
2637600-0000	.TOOL	11-41
2637602-0100	.DRILLING JIG	11-5
2637603-0000	.TOOL	11-43
2637604-0000	.BUSHING	11-43
2637605-0000	.BUSHING	11-43
2637665-0000	.GUIDE	5-67, 5-69, 5-71, 5-73, 5-75, 5-153, 5-155
2637666-0000	.GUIDE	5-67, 5-69, 5-71, 5-73, 5-75, 5-161, 5-163
2638077-0000	.SHAFT	1-245, 1-247, 1-249, 1-251
2638180-0000	.INSERT	5-77, 5-79
2639127-0000	.FOLDING BAR	5-51, 5-53, 5-55
2639128-0000	.FOLDING BAR	5-51, 5-53, 5-55
2639393-0000	.SPACER	5-51, 5-53, 5-55
2639498-0200	.SOFTWARE RECORDER	9-11
2639832-0000	.RAIL	5-259, 5-261, 5-263, 5-265, 5-267, 5-269
2639866-0000	.VOLUME FLAP	4-51, 4-53, 4-55, 4-57, 4-59
2639867-0000	.VOLUME FLAP	4-65, 4-67, 4-69, 4-71, 4-73
2640075-0000	.VOLUME BULGE	5-231, 5-233, 5-235, 5-237, 5-239, 5-241
2640076-0000	.RAIL	5-259, 5-261, 5-263, 5-265, 5-267, 5-269
2640116-0000	.TOOL	11-29, 11-31
2640138-0000	.VOLUME BULGE	4-51, 4-53, 4-55, 4-57, 4-59, 4-65, 4-67, 4-69, 4-71, 4-73
2640139-0000	.VOLUME SHIM	4-51, 4-53, 4-55, 4-57, 4-59, 4-65, 4-67, 4-69, 4-71, 4-73, 10-15, 10-17, 10-19, 10-21, 10-23, 10-25
2640186-0000	.TOOL	11-29, 11-31
2640292-0000	.TOOL	11-33
2640353-0000	.BRACKET	1-113, 1-115
2640354-0000	.ROLLER	1-113, 1-115
2640721-0000	.CARRIER	5-289, 5-291, 5-293
2640723-0000	.RAIL	5-259, 5-261, 5-263, 5-265, 5-267, 5-269
2640814-0000	.RULER	11-33
2640819-0000	.SCREW	3-17
2640822-0000	.SIGN	1-367
2640826-0000	.NUT	3-23
2640991-0000	.SLIDE	1-53, 1-55, 1-57
2640992-0000	.SLIDE	1-53, 1-55, 1-57
2640993-0000	.PLATE	1-53, 1-55, 1-57
2641000-0000	.SHAFT	1-53, 1-55, 1-57
2641203-0000	.TEMPLATE	11-5
2641204-0000	.TEMPLATE	11-5
2641225-0000	.INSERT	4-115, 4-117, 4-119, 4-121, 4-143, 4-145, 4-175, 4-177, 4-179, 4-181, 4-199, 4-201
2641271-0000	.SEAL	1-117, 1-119
2641282-0000	.COUNTER ROLLER	1-75, 1-77, 1-79
2641285-0000	.ROLLER	1-87, 1-89, 1-91, 1-93
2641286-0000	.ROLLER	1-87, 1-89, 1-91, 1-93
2641287-0000	.ROLLER	1-87, 1-89, 1-91, 1-93
2641288-0000	.ROLLER	1-87, 1-89, 1-91, 1-93
2641289-0000	.ROLLER	1-87, 1-89, 1-91, 1-93
2641290-0000	.ROLLER	1-87, 1-89, 1-91, 1-93
2641296-0000	.PIPE	1-221
2641298-0000	.PIPE	1-213
2641299-0000	.PIPE	1-221
2641317-0000	.PIPE	1-215, 1-217
2641319-0000	.BRACKET	1-215, 1-217
2641322-0000	.PIPE	1-213
2642097-0000	.PLATE	4-243, 4-245
2642146-0000	.TEMPLATE	11-5
2642177-0000	.GUIDE UPPER	5-105, 5-107
2642178-0000	.GUIDE UPPER	5-105, 5-107
2642530-0100	.CONTROL PANEL	11-83
2642531-0000	.WELDED CABINET	11-85
2642532-0000	.DOOR	11-85
2644177-0000	.CLAMP HUB	5-283
2644178-0000	.BLOCK	5-283
2644317-0100	.TEMPLATE	11-27
2644318-0100	.TEMPLATE	11-27
2644368-0000	.BRACKET	5-51, 5-53, 5-55, 5-115, 5-117, 5-119
2644397-0000	.HOLDER	4-129, 4-131, 4-133, 4-187, 4-189, 4-191
2645568-0000	.CUTTING JAW	4-155, 4-157, 4-159, 4-161
2646014-0100	.CONTROL PANEL	11-81
2646344-0000	.PLATE	4-243, 4-245
2646345-0000	.SHAFT	4-243, 4-245
2646428-0100	.LIFTING UNIT	11-5
2647082-0000	.GUIDE	5-161, 5-163
2647083-0000	.GUIDE	5-153, 5-155
2647084-0000	.BAR	5-153, 5-155
2647085-0000	.BAR	5-161, 5-163
2647086-0000	.GUIDE	5-161, 5-163

Part No	Description	Page No
2647087-0000	.GUIDE	5-153, 5-155
2647088-0000	.BAR	5-153, 5-155
2647089-0000	.BAR	5-161, 5-163
2647090-0000	.SLIDE	5-153, 5-155
2647091-0000	.SLIDE	5-161, 5-163
2647092-0000	.ANGLE BLOCK	5-153, 5-155, 5-161, 5-163
2647093-0000	.PUSHER	5-243, 5-245
2647094-0000	.PUSHER	5-243, 5-245
2647095-0000	.PUSHER	5-243, 5-245
2647096-0000	.PUSHER	5-243, 5-245
2647097-0000	.NAIL	5-243, 5-245
2647098-0000	.BLOCK	5-243, 5-245
2647099-0000	.GUIDE	5-231, 5-233, 5-235, 5-237, 5-239, 5-241
2647100-0000	.VOLUME BULGE	5-243, 5-245
2647101-0000	.SUPPORT	5-231, 5-233, 5-235, 5-237, 5-239, 5-241
2647102-0000	.PIPE	5-17, 5-19
2647103-0000	.SHAFT	5-17, 5-19
2647104-0000	.LEVER	5-25, 5-27
2647105-0000	.AXLE PIN	5-25, 5-27
2647106-0000	.SLIDER	5-27
2647107-0000	.SLIDER	5-25
2647108-0000	.STRUT	5-21, 5-23
2647109-0000	.SHAFT	5-21, 5-23
2647110-0000	.BLOCK	5-5, 5-7
2647111-0000	.SUPPORT	5-95, 5-97
2647112-0000	.GUIDE	5-95, 5-97
2647113-0000	.BUSHING	5-243, 5-245
2647114-0000	.INSERT	4-115, 4-117, 4-119, 4-121, 4-143, 4-145, 4-175, 4-177, 4-179, 4-181, 4-199, 4-201
2647115-0000	.CARRIER	4-115, 4-117, 4-119, 4-121
2647116-0000	.CARRIER	4-143, 4-145
2647117-0000	.CARRIER	4-175, 4-177, 4-179, 4-181
2647118-0000	.CARRIER	4-199, 4-201
2647119-0000	.GUIDE	5-105, 5-107
2647120-0000	.GUIDE	5-105, 5-107
2647121-0000	.FOLDING PART	5-115, 5-117, 5-119
2647122-0000	.FOLDING PART	5-115, 5-117, 5-119
2647126-0000	.BRACKET	5-115, 5-117, 5-119
2647127-0000	.FOLDING PART	5-115, 5-117, 5-119
2647128-0000	.FOLDING PART	5-115, 5-117, 5-119
2647129-0000	.FOLDING PART	5-115, 5-117, 5-119
2647130-0000	.FOLDING PART	5-115, 5-117, 5-119
2647131-0000	.GUIDE	5-131, 5-133, 5-135
2648780-0000	.LEVER	1-199
2648846-0000	.SHAFT	4-243, 4-245
2648847-0000	.PLATE	4-243, 4-245
2649130-0000	.GUIDE RAIL	5-115, 5-117, 5-119
2649131-0000	.GUIDE RAIL	5-115, 5-117, 5-119
2649132-0000	.GUIDE RAIL	5-115, 5-117, 5-119
2649133-0000	.GUIDE RAIL	5-115, 5-117, 5-119
2649134-0000	.BRACKET	5-115, 5-117, 5-119
2649139-0000	.SPACER	5-115, 5-117, 5-119
2649165-0100	.CABLE DUCT	1-407, 1-409, 1-411
2649167-0000	.INSERT	1-259, 1-413
2649440-0000	.TEMPLATE	11-27
2649441-0000	.SHAFT	4-243, 4-245
2649442-0000	.PLATE	4-243, 4-245
2649443-0000	.CAM	4-51, 4-53, 4-55, 4-57, 4-59, 4-65, 4-67, 4-69, 4-71, 4-73
2649660-0000	.SHAFT	4-93, 4-95, 4-97, 4-99, 4-103, 4-109, 4-113
2649664-0000	.CARRIER RULER	4-165, 4-167
2649674-0000	.CUTTING JAW	4-155, 4-157, 4-159, 4-161
2649675-0000	.RAIL	4-129, 4-131, 4-133
2649676-0000	.RAIL	4-187, 4-189, 4-191
2649677-0000	.DAMPER	4-103, 4-109, 4-113
2650713-0000	.PLATE	4-291, 4-293
2650717-0000	.SCREW	4-291, 4-293
2650807-0000	.SIDE PLATE	5-301, 5-303, 6-5, 6-7
2650808-0000	.SIDE PLATE	5-301, 5-303, 6-5, 6-7
2650812-0000	.SHAFT	4-243, 4-245
2650817-0000	.SPRING	5-91
2651145-0000	.BLOCK	5-231, 5-233, 5-235, 5-237, 5-239, 5-241
2651146-0000	.FLAP	5-77, 5-79
2651695-0000	.COVER PLATE	1-71, 1-73
2651707-0000	.PRESSURE FLANGE	1-245, 1-247, 1-249, 1-251
2651789-0000	.ROLLER	1-125, 1-127
2651790-0000	.ROLLER	1-125, 1-127
2651925-0000	.PLATE	8-245
2652191-0000	.KNOB	5-137, 5-139, 5-141, 5-143, 5-145, 5-147, 5-149
2652206-0000	.GUIDE	5-259, 5-261, 5-263, 5-265, 5-267, 5-269
2652311-0000	.PLATE	5-277
2652888-0000	.SHAFT	5-91
2652889-0000	.SCREW	5-91
2652891-0000	.TOOTHED PULLEY	4-291, 4-293
2652892-0000	.PLATE	4-243, 4-245
2652896-0000	.SHAFT	4-27, 4-29, 4-39, 4-41, 4-51, 4-53, 4-55, 4-57, 4-59, 4-65, 4-67, 4-69, 4-71, 4-73

Part No	Description	Page No
2653607-0000	.SCREW	1-199
2654290-0000	.VOLUME SHIM	4-51, 4-53, 4-55, 4-57, 4-59, 4-65, 4-67, 4-69, 4-71, 4-73, 10-15, 10-17, 10-19, 10-21, 10-23, 10-25
2655095-0000	.BRACKET	4-249, 4-251, 4-253
2655096-0000	.SLIDE	4-249, 4-251, 4-253
2655097-0000	.KNOB	4-249, 4-251, 4-253
2655098-0000	.SHAFT	4-249, 4-251, 4-253
2655500-0000	.WASHER	5-259, 5-261, 5-263, 5-265, 5-267, 5-269
2656407-0000	.SLIDE RAIL	5-253, 5-255, 6-65
2656655-0000	.WHEEL	6-71
2656672-0000	.SPROCKET	5-257, 5-277, 6-67
2656673-0000	.SPACER	5-257, 6-67
2656686-0000	.SIDE PLATE	5-253, 5-255, 6-65
2656687-0000	.SIDE PLATE	5-253, 5-255, 6-65
2656899-0000	.BRACKET	2-109, 2-111, 2-113, 2-115
2656905-0100	.OPTIONAL PARTS	1-399, 1-401
2656910-0200	.HEAD SPACE BY INJECTION	1-241, 1-243
2657860-0000	.BRACKET	1-113, 1-115
2657863-0000	.PIPE CONNECTION	1-263
2657864-0000	.PIPE CONNECTION	1-263
2657865-0000	.PIPE CONNECTION	1-263
2657873-0100	.LONGITUDINAL SEALING	1-23, 1-25
2657886-0000	.COUNTER PLATE	1-193, 1-195
2657887-0000	.HORN	1-221
2657888-0000	.HORN	1-221
2657902-0000	.PRESSURE FLANGE	1-245, 1-247, 1-249, 1-251
2657915-0000	.PIPE	1-219
2657923-0000	.COUNTER ROLLER	1-75, 1-77, 1-79
2657925-0000	.ROLLER	1-123
2657932-0000	.BAR	5-153, 5-155
2657933-0000	.BAR	5-161, 5-163
2657934-0000	.SLIDE	5-161, 5-163
2657935-0000	.SLIDE	5-153, 5-155
2657936-0000	.GUIDE	5-161, 5-163
2657937-0000	.GUIDE	5-153, 5-155
2658058-0000	.RAIL	8-167
2658077-0000	.SHAFT	1-199
2658237-0100	.FLAP	5-77, 5-79
2658238-0000	.FLAP	5-83
2658239-0000	.BOTTOM	5-83, 10-11, 10-13
2658240-0000	.BOTTOM	5-83, 5-85, 5-87, 5-89, 10-11, 10-13
2658241-0000	.SLIDE	5-83, 5-85, 5-87, 5-89
2658242-0000	.FLAP	5-85, 5-87, 5-89
2658247-0000	.WASHER	5-243, 5-245
2658249-0000	.SHIM	5-231, 5-233, 5-235, 5-237, 5-239, 5-241
2658251-0000	.SPACER	4-231, 4-233, 4-235, 4-237
2658252-0000	.RAIL BRACKET	4-231, 4-233, 4-235, 4-237
2658253-0000	.CURVE	4-231, 4-233, 4-235, 4-237
2658256-0000	.FLAP HOLDER	4-65, 4-67, 4-69, 4-71, 4-73
2658257-0000	.FLAP HOLDER	4-51, 4-53, 4-55, 4-57, 4-59
2658258-0000	.SHAFT	4-51, 4-53, 4-55, 4-57, 4-59, 4-65, 4-67, 4-69, 4-71, 4-73
2658263-0000	.VOLUME BULGE	5-243, 5-245
2658264-0000	.VOLUME BULGE	5-243, 5-245
2658265-0000	.CUTTING JAW	4-155, 4-157, 4-159, 4-161
2658298-0000	.TUBE FLUSHING DEVICE	4-247
2658299-0000	.TUBE FLUSHING DEVICE	4-247
2658390-0100	.BOTTOM	5-77, 5-79
2659361-0000	.BRACKET	1-123
2660285-0000	.CARRIER RULER	4-211, 4-213, 4-215, 4-217
2660286-0000	.BEARING HOUSING	4-155, 4-157, 4-159, 4-161
2660289-0000	.VOLUME FLAP	4-101, 4-105, 4-107, 4-111
2660290-0000	.FOLDING FLAP	4-165, 4-167, 4-211, 4-213, 4-215, 4-217
2660291-0000	.FOLDING FLAP	4-165, 4-167, 4-211, 4-213, 4-215, 4-217
2660292-0000	.VOLUME BULGE	4-101, 4-105, 4-107, 4-111
2660293-0000	.VOLUME SHIM	4-101, 4-105, 4-107, 4-111, 10-15, 10-17, 10-19, 10-21, 10-23, 10-25
2660294-0000	.PLATE	4-165, 4-167, 4-211, 4-213, 4-215, 4-217
2660295-0000	.ROLLER	4-93, 4-95, 4-97, 4-99, 4-101, 4-105, 4-107, 4-111
2660296-0000	.BUSHING	4-93, 4-95, 4-97, 4-99, 4-101, 4-105, 4-107, 4-111
2660308-0000	.FLAP	4-107, 4-111
2660309-0000	.FLAP	4-107, 4-111
2660379-0000	.VOLUME FLAP	4-51, 4-53, 4-55, 4-57, 4-59
2660380-0000	.VOLUME FLAP	4-65, 4-67, 4-69, 4-71, 4-73
2660381-0000	.VOLUME FLAP	4-77
2660382-0000	.VOLUME FLAP	4-77
2660383-0000	.VOLUME FLAP	4-63
2660384-0000	.VOLUME FLAP	4-63
2660390-0000	.VOLUME SHIM	4-63, 4-77, 10-15, 10-17, 10-19, 10-21, 10-23, 10-25
2660391-0000	.SCREW	4-51, 4-53, 4-55, 4-57, 4-59, 4-65, 4-67, 4-69, 4-71, 4-73
2660392-0000	.VOLUME BULGE	4-51, 4-53, 4-55, 4-57, 4-59, 4-65, 4-67, 4-69, 4-71, 4-73
2660393-0000	.VOLUME SHIM	4-51, 4-53, 4-55, 4-57, 4-59, 4-65, 4-67, 4-69, 4-71, 4-73, 10-15, 10-17, 10-19, 10-21, 10-23, 10-25
2660395-0000	.VOLUME BULGE	4-63, 4-77
2660397-0000	.WEDGE	4-51, 4-53, 4-55, 4-57, 4-59, 4-65, 4-67, 4-69, 4-71, 4-73
2660398-0000	.WEDGE	4-63, 4-77

Part No	Description	Page No
2660399-0000	.ROLLER	4-63, 4-77
2660400-0000	.STOP	4-51, 4-53, 4-55, 4-57, 4-59, 4-65, 4-67, 4-69, 4-71, 4-73, 4-83, 4-85, 4-89, 4-91
2660401-0000	.CATCH	4-51, 4-53, 4-55, 4-57, 4-59, 4-65, 4-67, 4-69, 4-71, 4-73, 4-83, 4-85, 4-89, 4-91
2660404-0000	.HOLDER	4-129, 4-131, 4-133, 4-187, 4-189, 4-191
2660549-0000	.BRACKET	5-131, 5-133, 5-135
2660550-0000	.GUIDE	5-131, 5-133, 5-135
2660552-0000	.BRACKET	5-131, 5-133, 5-135
2660555-0000	.GUIDE	5-131, 5-133, 5-135
2660776-0000	.BEARING BLOCK	8-97
2660841-0000	.PUSHER	5-231, 5-233, 5-235, 5-237, 5-239, 5-241
2660843-0000	.TEMPLATE	10-37
2661082-0000	.PLATE	2-133, 2-135, 2-137
2661094-0000	.SCREW	11-19, 11-21
2661153-0000	.SPACER	5-137, 5-139, 5-141, 5-143
2661429-0000	.PUSHER	5-231, 5-233, 5-235, 5-237, 5-239, 5-241
2661450-0000	.VOLUME FLAP	4-65, 4-67, 4-69, 4-71, 4-73
2661451-0000	.VOLUME FLAP	4-51, 4-53, 4-55, 4-57, 4-59
2662012-0000	.NIPPLE	2-91
2662142-0000	.SPRING	5-231, 5-233, 5-235, 5-237, 5-239, 5-241
2662165-0000	.SPRING	4-27, 4-29, 4-39, 4-41
2662166-0000	.SPRING	4-27, 4-29, 4-39, 4-41
2662167-0000	.BUSHING	4-27, 4-29, 4-39, 4-41, 4-51, 4-53, 4-55, 4-57, 4-59, 4-65, 4-67, 4-69, 4-71, 4-73
2662168-0000	.VOLUME BULGE	4-51, 4-53, 4-55, 4-57, 4-59, 4-65, 4-67, 4-69, 4-71, 4-73
2662169-0000	.VOLUME SHIM	4-51, 4-53, 4-55, 4-57, 4-59, 4-65, 4-67, 4-69, 4-71, 4-73, 10-15, 10-17, 10-19, 10-21, 10-23, 10-25
2662211-0000	.CHAIN	11-19, 11-21
2662431-0000	.CAM	4-51, 4-53, 4-55, 4-57, 4-59, 4-65, 4-67, 4-69, 4-71, 4-73
2662639-0000	.ROLLER	1-341
2662640-0000	.VOLUME CAM	4-231, 4-233, 4-235, 4-237
2662641-0000	.VOLUME CAM	4-231, 4-233, 4-235, 4-237
2663360-0000	.SPRING	4-51, 4-53, 4-55, 4-57, 4-59, 4-65, 4-67, 4-69, 4-71, 4-73
2663361-0000	.SPRING	4-51, 4-53, 4-55, 4-57, 4-59, 4-65, 4-67, 4-69, 4-71, 4-73
2663367-0000	.NUT	5-17, 5-19
2663369-0000	.BLOCK	5-17, 5-19
2663370-0000	.SUPPORT	5-17, 5-19
2663371-0000	.SCREW	5-17, 5-19
2663372-0000	.SCREW	4-51, 4-53, 4-55, 4-57, 4-59, 4-65, 4-67, 4-69, 4-71, 4-73
2663373-0000	.BOTTOM	5-85, 5-87, 5-89, 10-11, 10-13
2663375-0000	.WASHER	4-27, 4-29, 4-39, 4-41, 4-51, 4-53, 4-55, 4-57, 4-59, 4-65, 4-67, 4-69, 4-71, 4-73
2663376-0000	.WASHER	4-27, 4-29, 4-39, 4-41, 4-51, 4-53, 4-55, 4-57, 4-59, 4-65, 4-67, 4-69, 4-71, 4-73
2663377-0000	.INDUCTOR	4-187, 4-189, 4-191, 10-15, 10-17, 10-19, 10-21, 10-23, 10-25
2663378-0000	.INDUCTOR	4-129, 4-131, 4-133, 10-15, 10-17, 10-19, 10-21, 10-23, 10-25
2664035-0000	.SPACER SCREW	5-115, 5-117, 5-119
2664200-0000	.GUIDE	5-153, 5-155
2664201-0000	.GUIDE	5-161, 5-163
2664280-0000	.HOLDER	4-129, 4-131, 4-133, 4-187, 4-189, 4-191
2664596-0000	.CARRIER	5-289, 5-291, 5-293
2664761-0000	.KNIFE	4-219, 10-15, 10-17, 10-19, 10-21, 10-23, 10-25
2664762-0000	.CUTTING JAW	4-155, 4-157, 4-159, 4-161
2664779-0000	.PLATE	4-243, 4-245
2664780-0000	.PLATE	4-243, 4-245
2665129-0000	.GABLE PLATE	7-55
2665131-0000	.LOCKING ARM	7-57
2665132-0000	.LOCKING ARM	7-57
2665188-0000	.CUTTING JAW	4-155, 4-157, 4-159, 4-161
2665197-0000	.BRACKET	5-315
2665198-0000	.PROTECTION	5-317
2665199-0000	.SLIDE	5-315
2665200-0000	.GUIDE	5-145, 5-147, 5-149
2665201-0000	.GUIDE	5-145, 5-147, 5-149
2665202-0000	.GUIDE	5-153, 5-155
2665203-0000	.GUIDE	5-161, 5-163
2665204-0000	.CRADLE	5-301, 5-303, 6-5, 6-7
2665205-0000	.PLATE	5-301, 5-303, 6-5, 6-7
2665206-0000	.PLATE	5-301, 5-303, 6-5, 6-7
2665624-0000	.BENDING ROLLER	8-163
2665720-0000	.SUPPORT	4-305
2665721-0000	.SHAFT	4-305
2665722-0000	.SUPPORT	4-305
2668220-0000	.BOTTOM	5-85, 5-87, 5-89
2668221-0000	.FLAP	5-85, 5-87, 5-89
2668222-0000	.SLIDE	5-85, 5-87, 5-89
2668223-0000	.FLAP	5-77, 5-79
2668224-0000	.GUIDE	5-153, 5-155
2668225-0000	.GUIDE	5-153, 5-155
2668226-0000	.BAR	5-153, 5-155
2668227-0000	.SLIDE	5-153, 5-155
2668228-0000	.GUIDE	5-161, 5-163
2668229-0000	.GUIDE	5-161, 5-163
2668230-0000	.BAR	5-161, 5-163
2668231-0000	.SLIDE	5-161, 5-163
2668232-0000	.BAR	5-153, 5-155
2668233-0000	.SLIDE	5-153, 5-155
2668234-0000	.BAR	5-161, 5-163

Part No	Description	Page No
2668235-0000	.SLIDE	5-161, 5-163
2668236-0000	.LEVER	5-21, 5-23
2668237-0000	.SHAFT	5-21, 5-23
2668238-0000	.PIPE	5-17, 5-19
2668239-0000	.BLOCK	5-5, 5-7
2668240-0000	.BLOCK	5-231, 5-233, 5-235, 5-237, 5-239, 5-241
2668242-0000	.BLOCK	5-95, 5-97
2668243-0000	.GUIDE	5-95, 5-97
2668244-0000	.HOLDER	5-145, 5-147, 5-149
2668245-0000	.SLIDER	5-25
2668246-0000	.SLIDER	5-27
2668247-0000	.GUIDE	5-131, 5-133, 5-135
2668248-0000	.FOLDING PART	5-115, 5-117, 5-119
2668249-0000	.GUIDE RAIL	5-115, 5-117, 5-119
2668250-0000	.GUIDE RAIL	5-115, 5-117, 5-119
2668251-0000	.FOLDING PART	5-115, 5-117, 5-119
2668252-0000	.GUIDE RAIL	5-115, 5-117, 5-119
2668253-0000	.GUIDE RAIL	5-115, 5-117, 5-119
2668254-0000	.BRACKET	5-115, 5-117, 5-119
2668312-0000	.FLAP HOLDER	4-51, 4-53, 4-55, 4-57, 4-59, 4-65, 4-67, 4-69, 4-71, 4-73
2668313-0000	.FOLDING FLAP	4-165, 4-167, 4-211, 4-213, 4-215, 4-217
2668314-0000	.FOLDING FLAP	4-165, 4-167, 4-211, 4-213, 4-215, 4-217
2668315-0000	.SHAFT	4-51, 4-53, 4-55, 4-57, 4-59, 4-65, 4-67, 4-69, 4-71, 4-73
2668318-0000	.HOLDER	4-129, 4-131, 4-133, 4-187, 4-189, 4-191
2668319-0000	.CUTTING JAW	4-155, 4-157, 4-159, 4-161
2668565-0000	.NOZZLE	1-215, 1-217
2668569-0000	.PLUG	1-215, 1-217
2671730-0100	.AIR NOZZLE	1-213
2672745-0000	.VOLUME SHIM	4-81, 10-15, 10-17, 10-19, 10-21, 10-23, 10-25
2672746-0000	.VOLUME BULGE	4-81
2672942-0000	.SYMBOLSIGN	1-375
2672950-0000	.ROLLER	1-87, 1-89, 1-91, 1-93
2672951-0000	.ROLLER	1-87, 1-89, 1-91, 1-93
2672952-0000	.ROLLER	1-87, 1-89, 1-91, 1-93
2672953-0000	.ROLLER	1-87, 1-89, 1-91, 1-93
2672954-0000	.ROLLER	1-87, 1-89, 1-91, 1-93
2672955-0000	.ROLLER	1-87, 1-89, 1-91, 1-93
2672963-0000	.CONNECTING PIPE	1-279, 1-281
2672970-0000	.ROLLER	1-105, 1-107, 1-109
2672972-0000	.BOLT	1-263
2672973-0000	.ELECTRODE	1-263
2672974-0000	.BUSHING	1-263
2672975-0000	.SPACER	1-255
2672978-0000	.ROLLER	1-87, 1-89, 1-91, 1-93
2672979-0000	.ROLLER	1-87, 1-89, 1-91, 1-93
2672980-0000	.ROLLER	1-87, 1-89, 1-91, 1-93
2672981-0000	.ROLLER	1-87, 1-89, 1-91, 1-93
2672984-0000	.INDUCTOR	1-53, 1-55, 1-57
2672985-0000	.ROLLER	1-105, 1-107, 1-109
2672986-0000	.ROLLER	1-105, 1-107, 1-109
2672994-0000	.HOOD	1-245, 1-247, 1-249, 1-251
2673015-0000	.FORK	1-245, 1-247, 1-249, 1-251
2673016-0000	.FORK	1-245, 1-247, 1-249, 1-251
2673021-0000	.SHAFT	1-245, 1-247, 1-249, 1-251
2673022-0000	.SHAFT	1-245, 1-247, 1-249, 1-251
2673023-0000	.LOWER FORMING RING	1-75, 1-77, 1-79
2674188-0100	.EDGE ROLLER	1-23, 1-25
2674238-0000	.BOTTOM	5-83
2674239-0000	.SLIDE	5-83, 5-85, 5-87, 5-89
2674241-0000	.BOTTOM	5-85, 5-87, 5-89
2674242-0000	.SPACER	5-199, 5-201, 5-203, 5-205, 5-207, 5-209
2674244-0000	.GUIDE	5-161, 5-163
2674245-0000	.GUIDE	5-161, 5-163
2674246-0000	.BAR	5-161, 5-163
2674247-0000	.SLIDE	5-161, 5-163
2674248-0000	.PLATE	5-153, 5-155, 5-161, 5-163
2674249-0000	.GUIDE	5-153, 5-155
2674250-0000	.GUIDE	5-153, 5-155
2674251-0000	.BAR	5-153, 5-155
2674252-0000	.SLIDE	5-153, 5-155
2674253-0000	.BLOCK	5-5, 5-7
2674254-0000	.SLIDER	5-27
2674255-0000	.STRUT	5-21, 5-23
2674256-0000	.SHAFT	5-21, 5-23
2674257-0000	.PIPE	5-17, 5-19
2674258-0000	.SLIDER	5-25
2674259-0000	.GUIDE	5-131, 5-133, 5-135
2674260-0000	.FOLDING PART	5-115, 5-117, 5-119
2674261-0000	.FOLDING PART	5-115, 5-117, 5-119
2674262-0000	.FOLDING PART	5-115, 5-117, 5-119
2674263-0000	.FOLDING PART	5-115, 5-117, 5-119
2674264-0000	.FOLDING PART	5-115, 5-117, 5-119
2674265-0000	.FOLDING PART	5-115, 5-117, 5-119
2674266-0000	.SPACER	5-115, 5-117, 5-119

Part No	Description	Page No
2674267-0000	.SPACER	5-115, 5-117, 5-119
2674268-0000	.SPACER	5-115, 5-117, 5-119
2674269-0000	.NAIL	5-243, 5-245
2674270-0000	.PUSHER	5-243, 5-245
2674271-0000	.PUSHER	5-243, 5-245
2674272-0000	.PUSHER	5-243, 5-245
2674273-0000	.PUSHER	5-243, 5-245
2674323-0000	.PLATE	4-243, 4-245
2674325-0000	.CAM	4-51, 4-53, 4-55, 4-57, 4-59, 4-65, 4-67, 4-69, 4-71, 4-73
2674326-0000	.CAM	4-51, 4-53, 4-55, 4-57, 4-59, 4-65, 4-67, 4-69, 4-71, 4-73
2674327-0000	.SHAFT	4-51, 4-53, 4-55, 4-57, 4-59, 4-65, 4-67, 4-69, 4-71, 4-73
2674328-0000	.VOLUME SHIM	4-51, 4-53, 4-55, 4-57, 4-59, 4-65, 4-67, 4-69, 4-71, 4-73, 10-15, 10-17, 10-19, 10-21, 10-23, 10-25
2674329-0000	.VOLUME BULGE	4-51, 4-53, 4-55, 4-57, 4-59, 4-65, 4-67, 4-69, 4-71, 4-73
2674331-0000	.VOLUME FLAP	4-65, 4-67, 4-69, 4-71, 4-73
2674332-0000	.VOLUME FLAP	4-51, 4-53, 4-55, 4-57, 4-59
2674333-0000	.VOLUME FLAP	4-65, 4-67, 4-69, 4-71, 4-73
2674334-0000	.VOLUME FLAP	4-51, 4-53, 4-55, 4-57, 4-59
2674335-0000	.HOLDER	4-129, 4-131, 4-133, 4-187, 4-189, 4-191
2674336-0000	.CUTTING JAW	4-155, 4-157, 4-159, 4-161
2675322-0000	.SLIDE	5-161, 5-163
2675323-0000	.SLIDE	5-153, 5-155
2675434-0000	.SUPPORT	11-19, 11-21
2675519-0000	.CABLE DUCT	9-77, 9-79, 9-81, 9-83, 9-85
2675521-0000	.RAIL	9-149, 9-151
2675522-0000	.DIVIDER	9-97, 9-99
2676615-0000	.NOZZLE	5-199, 5-201, 5-203, 5-205, 5-207, 5-209
2676616-0000	.NOZZLE	5-199, 5-201, 5-203, 5-205, 5-207, 5-209
2676617-0000	.NOZZLE	5-199, 5-201, 5-203, 5-205, 5-207, 5-209
2676815-0000	.FOLDING BAR	5-105, 5-107
2676816-0000	.FOLDING BAR	5-105, 5-107
2676933-0000	.BUSHING	4-51, 4-53, 4-55, 4-57, 4-59, 4-65, 4-67, 4-69, 4-71, 4-73
2676934-0000	.STOP	4-51, 4-53, 4-55, 4-57, 4-59, 4-65, 4-67, 4-69, 4-71, 4-73
2677383-0000	.ROLLER	4-243, 4-245
2677899-0000	.WASHER	4-249, 4-251, 4-253
2678621-0000	.GUIDE	5-161, 5-163
2678622-0000	.GUIDE	5-153, 5-155
2678708-0000	.SUPPORT	5-315
2678709-0100	.PROTECTIVE COVER	5-315
2678710-0150	.INFEED CONVEYOR SHORT	5-305
2678713-0000	.CAM	4-51, 4-53, 4-55, 4-57, 4-59, 4-65, 4-67, 4-69, 4-71, 4-73
2678714-0000	.CAM	4-51, 4-53, 4-55, 4-57, 4-59, 4-65, 4-67, 4-69, 4-71, 4-73
2678717-0000	.VOLUME SHIM	4-51, 4-53, 4-55, 4-57, 4-59, 4-65, 4-67, 4-69, 4-71, 4-73, 10-15, 10-17, 10-19, 10-21, 10-23, 10-25
2678753-0000	.PLATE	5-315
2678838-0000	.VOLUME BULGE	4-51, 4-53, 4-55, 4-57, 4-59, 4-65, 4-67, 4-69, 4-71, 4-73
2678839-0000	.VOLUME SHIM	4-51, 4-53, 4-55, 4-57, 4-59, 4-65, 4-67, 4-69, 4-71, 4-73, 10-15, 10-17, 10-19, 10-21, 10-23, 10-25
2678840-0000	.VOLUME BULGE	4-51, 4-53, 4-55, 4-57, 4-59, 4-65, 4-67, 4-69, 4-71, 4-73
2679598-0000	.SPLASH PLATE	2-349, 2-351
2679599-0000	.CHUTE	2-349, 2-351
2679735-0000	.SPRING	4-27, 4-29, 4-39, 4-41
2679736-0000	.SPRING	4-27, 4-29, 4-39, 4-41
2679884-0000	.BRACKET	4-249, 4-251, 4-253
2679885-0000	.SLIDE	4-249, 4-251, 4-253
2679886-0000	.KNOB	4-249, 4-251, 4-253
2679952-0000	.VOLUME BULGE	4-155, 4-157, 4-159, 4-161
2679953-0000	.VOLUME BULGE	4-129, 4-131, 4-133, 4-187, 4-189, 4-191
2680193-0000	.ROLLER	1-105, 1-107, 1-109
2680195-0000	.ROLLER	1-87, 1-89, 1-91, 1-93
2680196-0000	.ROLLER	1-87, 1-89, 1-91, 1-93
2680197-0000	.ROLLER	1-39, 1-41, 1-87, 1-89, 1-91, 1-93
2680198-0000	.ROLLER	1-87, 1-89, 1-91, 1-93
2680201-0000	.ROLLER	1-87, 1-89, 1-91, 1-93
2680332-0000	.SHIM	6-55, 6-57, 10-15, 10-17, 10-19, 10-21, 10-23, 10-25
2680390-0000	.INDEXING DEVICE	5-211
2680391-0000	.HEAD	5-213, 5-215, 5-217, 5-219, 5-221, 5-223
2680392-0000	.FILTER	5-225, 5-227, 5-229
2680393-0000	.LEVER	5-225, 5-227, 5-229
2680394-0000	.GASKET	5-225, 5-227, 5-229
2680401-0000	.SPRING	5-213, 5-215, 5-217, 5-219, 5-221, 5-223
2681244-0000	.PLATE	4-243, 4-245
2681259-0000	.RAIL	8-171, 8-173
2681260-0000	.RAIL	8-171, 8-173
2681261-0000	.SHAFT	8-157, 8-159
2681262-0000	.BRACKET	8-157, 8-159
2681263-0000	.BUSHING	8-157, 8-159
2681266-0000	.WASHER	8-157, 8-159
2681267-0000	.PLATE	8-171, 8-173
2681535-0000	.SHAFT	8-171, 8-173
2681617-0000	.GEAR WHEEL	4-305, 4-307
2681618-0000	.WORM WHEEL	4-305
2681619-0000	.WORM GEAR	4-305
2682167-0000	.ROLLER	1-105, 1-107, 1-109

Part No	Description	Page No
2682168-0000	.ROLLER	1-105, 1-107, 1-109
2682169-0000	.ROLLER	1-105, 1-107, 1-109
2682170-0000	.ROLLER	1-105, 1-107, 1-109
2682172-0000	.FLAP	4-101, 4-105
2682173-0000	.FLAP	4-101, 4-105
2682174-0000	.WASHER	4-101, 4-105, 4-107, 4-111
2682187-0000	.VOLUME FLAP	4-101, 4-105, 4-107, 4-111
2682188-0000	.FLAP	4-107, 4-111
2682189-0000	.FLAP	4-107, 4-111
2682190-0000	.FLAP	4-101, 4-105
2682191-0000	.FLAP	4-101, 4-105
2682198-0000	.ARM	4-279, 4-281, 4-283
2682199-0000	.ARM	4-267, 4-269, 4-271
2682222-0000	.CARRIER	5-289, 5-291, 5-293
2683974-0000	.HOLDER	2-9
2683975-0000	.HOLDER	2-9
2683976-0000	.SUPPORT	4-291, 4-293
2685238-0000	.PIPE	1-209, 1-211
2685246-0000	.PIPE	1-225
2685247-0000	.UPPER SECTION	1-225
2685271-0000	.PIPE	1-235
2685284-0000	.FILTER	1-235
2685285-0000	.BRACKET	1-245, 1-247, 1-249, 1-251
2685310-0000	.BRACKET	11-5
2685314-0000	.COIL	1-255
2685339-0000	.GASKET	1-255
2685340-0000	.COVER	1-255
2685341-0000	.COVER	1-255
2685342-0000	.HEATING ELEMENT	1-255
2685346-0000	.PIPE	1-255
2685375-0000	.RETAINING RING	1-225
2685380-0000	.SPACER	1-321, 1-323
2685631-0000	.ROLLER	1-105, 1-107, 1-109
2685632-0000	.ROLLER	1-105, 1-107, 1-109
2685633-0000	.ROLLER	1-105, 1-107, 1-109
2685732-0000	.KEY	6-17
2685812-0000	.PIN	6-43, 6-45
2685813-0000	.BOWL	6-43, 6-45
2686144-0000	.SHAFT	4-129, 4-131, 4-133, 4-155, 4-157, 4-159, 4-161, 4-187, 4-189, 4-191
2686316-0000	.FLANGE	3-9
2686317-0000	.SUPPORT	2-75
2686861-0000	.ROLLER	1-31, 1-33, 1-75, 1-77, 1-79
2686876-0000	.PUSHER	5-231, 5-233, 5-235, 5-237, 5-239, 5-241
2687109-0000	.COUPLING	5-225, 5-227, 5-229
2687110-0000	.LOCK WASHER	5-213, 5-215, 5-217, 5-219, 5-221, 5-223
2687111-0000	.LOCK WASHER	5-213, 5-215, 5-217, 5-219, 5-221, 5-223
2687787-0000	.RAIL	5-259, 5-261, 5-263, 5-265, 5-267, 5-269
2688066-0000	.MOUNTING SHEET	2-89
2688917-0000	.ROLLER	4-243, 4-245
2689138-0000	.MOUNTING BLOCK	8-171, 8-173
2689172-0000	.SPACER	1-87, 1-89, 1-91, 1-93
2689173-0000	.MOUNTING BLOCK	8-171, 8-173
2690377-0000	.BRACKET	1-345, 1-347
2690557-0101	.DOCUMENT FOLDER	11-19, 11-21
2691105-0000	.PNEUMATIC DIAGRAM	8-237, 8-239
2691183-0000	.FLANGED SHAFT	1-199
2691184-0000	.SHAFT	1-199
2691185-0000	.SUPPORT	1-199
2691421-0000	.SHIM	4-305
2693197-0000	.INSERT	5-77, 5-79
2693199-0000	.PLATE	8-171, 8-173
2693200-0000	.SCREW	5-77, 5-79
2693322-0000	.PIPE	5-323, 5-325
2693454-0000	.CARRIER	5-289, 5-291, 5-293
2693457-0000	.RAIL	5-259, 5-261, 5-263, 5-265, 5-267, 5-269
2693459-0000	.BRACKET	5-259, 5-261, 5-263, 5-265, 5-267, 5-269
2693460-0000	.BRACKET	5-259, 5-261, 5-263, 5-265, 5-267, 5-269
2693461-0000	.RAIL	5-259, 5-261, 5-263, 5-265, 5-267, 5-269
2693462-0000	.RAIL	5-259, 5-261, 5-263, 5-265, 5-267, 5-269
2693463-0000	.RAIL	5-259, 5-261, 5-263, 5-265, 5-267, 5-269
2693464-0000	.RAIL	5-259, 5-261, 5-263, 5-265, 5-267, 5-269
2693622-0000	.SPACER	1-287
2694095-0000	.BRACKET	4-249, 4-251, 4-253
2694714-0000	.GUIDE	1-53, 1-55, 1-57
2694715-0000	.SUPPORT	1-53, 1-55, 1-57
2694716-0000	.PLATE	1-53, 1-55, 1-57
2695408-0000	.HOLDER	4-229
2695409-0000	.HOLDER	4-227
2695800-0000	.INDUCTOR	1-53, 1-55, 1-57
2695955-0100	.VOLUME FLAP	4-79, 4-87
2695955-0101	.VOLUME FLAP	10-11, 10-13
2695955-0102	.VOLUME FLAP	10-11, 10-13
2695982-0000	.HOUSING	1-161, 1-163
2695984-0000	.FRAME	1-7

Part No	Description	Page No
2695987-0000	.PIPE	1-291
2695989-0000	.PIPE	1-291
2695990-0000	.PIPE	1-291
2695991-0000	.PIPE	1-291
2695992-0000	.PIPE	1-291
2695993-0000	.PIPE	1-291
2695994-0000	.ATTACHMENT PIPE	1-293
2695997-0000	.PIPE	1-221
2695998-0000	.PIPE	1-221
2695999-0000	.PIPE	1-355, 1-357
2696000-0000	.PIPE	1-355, 1-357
2696001-0000	.PIPE	1-355, 1-357
2696005-0000	.PIPE	1-307
2696025-0000	.PIPE	1-293
2696028-0000	.PIPE SUPPORT	1-311
2696029-0000	.CONNECTING PIPE	1-311
2696031-0000	.FRAME UPPER	1-333, 1-335
2696032-0000	.FRAME	1-333, 1-335
2696034-0000	.HOLDER	1-333, 1-335
2696035-0000	.COVER	1-333, 1-335
2696036-0000	.HOLDER	1-333, 1-335
2696037-0000	.PIPE	1-293
2696038-0000	.BRACKET	1-383
2696039-0000	.BRACKET	1-383
2696094-0000	.CHAMBER	1-321, 1-323
2696095-0000	.PEROXIDE CHAMBER	1-321, 1-323
2696097-0000	.PLATE	1-321, 1-323
2696104-0000	.BRACKET	1-333, 1-335
2696106-0000	.BRACKET	1-285
2696108-0000	.PIPE	1-285
2696109-0000	.PLUG	1-285
2696111-0000	.VALVE BODY	1-285
2696112-0000	.VALVE BODY	1-285
2696118-0100	.HEATER	1-253
2696119-0000	.PIPE	1-255
2696120-0100	.PNEUMATIC PANEL	1-253
2696156-0100	.VOLUME FLAP	4-87
2696182-0100	.VOLUME FLAP	4-79
2696411-0000	.SPACER	1-87, 1-89, 1-91, 1-93
2696412-0000	.SPACER	1-87, 1-89, 1-91, 1-93
2696806-0000	.ROLLER	4-243, 4-245
2696851-0000	.RETAINING RING	5-17, 5-19
2697307-0000	.CURVE	4-231, 4-233, 4-235, 4-237
2698011-0000	.BUSBAR	4-129, 4-131, 4-133
2698012-0000	.BUSBAR	4-187, 4-189, 4-191
2698260-0000	.VOLUME SHIM	5-231, 5-233, 5-235, 5-237, 5-239, 5-241
2698261-0000	.VOLUME BULGE	5-231, 5-233, 5-235, 5-237, 5-239, 5-241
2698262-0000	.VOLUME BULGE	5-231, 5-233, 5-235, 5-237, 5-239, 5-241
2698263-0000	.VOLUME BULGE	5-231, 5-233, 5-235, 5-237, 5-239, 5-241
2698264-0000	.FLAP	5-231, 5-233, 5-235, 5-237, 5-239, 5-241
2698265-0000	.FLAP	5-231, 5-233, 5-235, 5-237, 5-239, 5-241
2698293-0000	.FOLDING DEVICE	5-25
2698294-0000	.FOLDING DEVICE	5-27
2698299-0000	.BRACKET	5-105, 5-107
2698300-0000	.PLATE	5-231, 5-233, 5-235, 5-237, 5-239, 5-241
2698319-0000	.BLOCK	5-243, 5-245
2698625-0000	.SHAFT	4-243, 4-245
2698626-0000	.PLATE	4-243, 4-245
2698628-0000	.RULER	4-259
2698629-0000	.TEMPLATE	11-27
2698631-0000	.VOLUME BULGE	4-129, 4-131, 4-133, 4-155, 4-157, 4-159, 4-161, 4-187, 4-189, 4-191
2698638-0100	.VOLUME FLAP CUTTING RIGHT	4-5
2698639-0100	.VOLUME FLAP PRESSURE RIGHT	4-5
2699090-0001	.RECORDER	9-15
2699092-0001	.RECORDER	9-15
2699106-0000	.SIDE PLATE	5-277
2699107-0000	.SIDE PLATE	5-277
2699108-0000	.SHAFT	5-277
2699109-0000	.SPACER	5-277
2699584-0830	.SLIDING STRIP	6-71
2699996-0000	.BLOCK	8-179, 8-181, 8-189, 8-191
2700019-0000	.ROCKER ARM	8-179, 8-181
2700030-0000	.ROCKER ARM	8-179, 8-181
2700034-0000	.ROCKER ARM	8-189, 8-191
2700035-0000	.ROCKER ARM	8-189, 8-191
2700059-0100	.COMPRESSOR UNIT	1-203, 1-205
2700151-0000	.LID	4-127
2700546-0000	.FRONT RING	1-31, 1-33, 1-75, 1-77, 1-79
2701169-0002	.RECORDER	9-15
2701319-0000	.GUIDE PIN	8-241
2701846-0000	.FLANGE	8-249
2701847-0000	.BRACKET	8-249
2701880-0000	.FLANGE	8-125
2701881-0000	.BRACKET	8-125

Part No	Description	Page No
2703095-0000	.ROCKER ARM	8-157, 8-159
2703096-0000	.SUPPORT	8-153, 8-157, 8-159
2703169-0000	.CLAMP	6-43, 6-45
2703170-0000	.CLAMP	6-43, 6-45
2705812-0100	.VOLUME FLAP	4-65, 4-67, 4-69, 4-71, 4-73
2705812-0101	.VOLUME FLAP	10-11, 10-13
2705812-0102	.VOLUME FLAP	10-11, 10-13
2705813-0100	.VOLUME FLAP	4-51, 4-53, 4-55, 4-57, 4-59
2705813-0101	.VOLUME FLAP	10-11, 10-13
2705813-0102	.VOLUME FLAP	10-11, 10-13
2705814-0100	.PUSHER	5-231, 5-233, 5-235, 5-237, 5-239, 5-241
2705814-0101	.PUSHER	10-11, 10-13
2705814-0102	.PUSHER	10-11, 10-13
2705814-0103	.PUSHER	10-11, 10-13
2705814-0104	.PUSHER	10-11, 10-13
2705896-0000	.FLANGE	5-319
2707506-0000	.SHAFT	1-345, 1-347
2708322-0000	.RAIL	5-115, 5-117, 5-119
2708323-0000	.RAIL	5-115, 5-117, 5-119
2708584-0000	.CONNECTION PIPE	1-319
2709216-0000	.FRAME	1-201
2709217-0000	.GASKET	1-201
2709219-0000	.COVER	1-255
2709220-0000	.SPACER	1-255
2709224-0000	.WHEEL	1-321, 1-323
2709225-0000	.SHAFT	1-165, 1-167, 1-169
2709262-0000	.SHAFT	1-19
2709302-0000	.ROLLER	1-105, 1-107, 1-109
2709785-0000	.ROLLER	1-75, 1-77, 1-79
2710507-0000	.KNOB	2-251, 2-253
2710508-0000	.TOOL BOX	11-27
2710558-0000	.COVERING PANEL	1-421
2710560-0000	.COVER	1-421
2710561-0000	.COVERING PANEL	1-419
2710563-0000	.BRACKET	1-421
2710564-0000	.DOOR	1-419
2711240-0000	.BRACKET	1-421
2711242-0000	.BRACKET	1-421
2711243-0000	.COVERING PANEL	1-419
2711245-0000	.COVER	1-289
2711246-0000	.COVERING PANEL	1-419
2711247-0000	.COVER	1-289
2711248-0000	.DOOR	1-419
2711249-0000	.PANEL	1-419
2711250-0000	.FRAME	1-419
2711251-0000	.HINGE	1-289
2711254-0000	.COVER	1-289
2711255-0000	.COVERING PANEL	1-419
2711256-0000	.BRACKET	1-421
2711257-0000	.BRACKET	1-421
2711258-0000	.FRAME	1-421
2711259-0000	.FRAME	1-421
2711260-0000	.BRACKET	1-421
2711261-0000	.BRACKET	1-419
2711262-0000	.BRACKET	1-419
2711263-0000	.BRACKET	1-419
2711266-0000	.BRACKET	1-419
2711267-0000	.BRACKET	1-419
2711269-0000	.DOOR	1-421
2711289-0000	.SUPPORT	4-307
2711991-0000	.SUPPORT	8-105
2711992-0000	.COVER	8-105
2711993-0100	.AIR SUPPLY	8-97
2712433-0000	.COVERING PANEL	1-419
2712434-0000	.FRAME	1-421
2712435-0000	.BRACKET	1-421
2715295-0000	.BRACKET	4-249, 4-251, 4-253
2715296-0000	.BRACKET	4-249, 4-251, 4-253
2715297-0000	.BOW CLAMP	4-249, 4-251, 4-253
2715298-0000	.BRACKET	2-109, 2-111, 2-113, 2-115
2715299-0000	.BRACKET	2-109, 2-111, 2-113, 2-115
2715300-0000	.BRACKET	4-259
2715301-0000	.SUPPORT	4-259
2715302-0000	.BRACKET	4-249, 4-251, 4-253
2715495-0000	.RAIL	5-259, 5-261, 5-263, 5-265, 5-267, 5-269
2715496-0000	.RAIL	5-259, 5-261, 5-263, 5-265, 5-267, 5-269
2715497-0000	.RAIL	5-259, 5-261, 5-263, 5-265, 5-267, 5-269
2715498-0000	.RAIL	5-259, 5-261, 5-263, 5-265, 5-267, 5-269
2715500-0000	.RAIL	5-259, 5-261, 5-263, 5-265, 5-267, 5-269
2715501-0000	.BRACKET	5-259, 5-261, 5-263, 5-265, 5-267, 5-269
2715502-0000	.SUPPORTING ARM	5-279, 5-281
2715503-0000	.RAIL	5-259, 5-261, 5-263, 5-265, 5-267, 5-269
2715504-0000	.RAIL	5-259, 5-261, 5-263, 5-265, 5-267, 5-269
2715553-0000	.BENDING ROLLER	1-155, 1-157

Part No	Description	Page No
2715556-0100	.BATH	1-313
2715567-0000	.BRACKET	1-123
2715569-0000	.BRACKET	1-245, 1-247, 1-249, 1-251
2715570-0000	.ROLLER	1-123
2715581-0000	.PLATE	1-367
2715601-0000	.SHAFT	1-19
2715602-0000	.PIPE	1-285
2715618-0000	.LEVER	1-19
2715649-0004	.SPACER	1-123
2715649-0005	.SPACER	1-123
2715649-0008	.SPACER	1-123
2715650-0002	.SCREW	1-123
2715650-0003	.SCREW	1-123
2715650-0005	.SCREW	1-123
2715650-0006	.SCREW	1-123
2715652-0000	.FORK	1-245, 1-247, 1-249, 1-251
2716441-0000	.BOTTOM PLATE	1-193, 1-195
2716442-0000	.PLATE	1-193, 1-195
2716443-0000	.ROLLER	1-47, 1-49
2716445-0000	.PLATE	1-161, 1-163
2716539-0000	.ROLLER	1-39, 1-41
2716540-0000	.ROLLER	1-39, 1-41
2716543-0000	.ROLLER	1-31, 1-33
2716546-0000	.ROLLER	1-31, 1-33
2716547-0000	.ROLLER	1-61, 1-63, 1-65, 1-67, 1-69
2716548-0000	.ROLLER	1-61, 1-63, 1-65, 1-67, 1-69
2718901-0000	.SEAL	1-117, 1-119
2719081-0000	.BRACKET	4-249, 4-251, 4-253
2719737-0000	.PNEUMATIC DIAGRAM	2-161, 2-163, 2-165, 2-327
2719738-0000	.PNEUMATIC DIAGRAM	2-47, 2-327
2720716-0000	.LIFTING DEVICE	11-67
2720717-0000	.ROLLER	1-87, 1-89, 1-91, 1-93
2720846-0000	.COUNTER ROLLER	1-75, 1-77, 1-79
2721151-0000	.CANTILEVER	2-251, 2-253
2721423-0000	.FORMING RING	1-31, 1-33, 1-75, 1-77, 1-79
2721434-0000	.SHAFT	1-345, 1-347
2723460-0000	.FRAME	2-63
2724927-0000	.BRACKET	4-249, 4-251, 4-253
2724928-0000	.SLIDE	4-249, 4-251, 4-253
2724929-0000	.KNOB	4-249, 4-251, 4-253
2724930-0000	.SCREW	4-249, 4-251, 4-253
2724932-0000	.NUT	4-249, 4-251, 4-253
2724934-0000	.BRACKET	5-259, 5-261, 5-263, 5-265, 5-267, 5-269
2724936-0000	.BRACKET	5-259, 5-261, 5-263, 5-265, 5-267, 5-269
2724937-0000	.SUPPORTING ARM	5-279, 5-281
2724940-0000	.RAIL	5-259, 5-261, 5-263, 5-265, 5-267, 5-269
2724941-0000	.RAIL	5-259, 5-261, 5-263, 5-265, 5-267, 5-269
2724942-0000	.RAIL	5-259, 5-261, 5-263, 5-265, 5-267, 5-269
2724944-0000	.RAIL	5-259, 5-261, 5-263, 5-265, 5-267, 5-269
2724945-0000	.RAIL	5-259, 5-261, 5-263, 5-265, 5-267, 5-269
2724946-0000	.RAIL	5-259, 5-261, 5-263, 5-265, 5-267, 5-269
2724947-0000	.RAIL	5-259, 5-261, 5-263, 5-265, 5-267, 5-269
2724948-0000	.RAIL	5-259, 5-261, 5-263, 5-265, 5-267, 5-269
2724949-0000	.RAIL	5-259, 5-261, 5-263, 5-265, 5-267, 5-269
2724950-0000	.RAIL	5-259, 5-261, 5-263, 5-265, 5-267, 5-269
2724951-0000	.RAIL	5-259, 5-261, 5-263, 5-265, 5-267, 5-269
2724952-0000	.SUPPORTING ARM	5-279, 5-281
2725392-0000	.STOP	4-51, 4-53, 4-55, 4-57, 4-59, 4-65, 4-67, 4-69, 4-71, 4-73
2725393-0000	.STOPPER	4-51, 4-53, 4-55, 4-57, 4-59, 4-65, 4-67, 4-69, 4-71, 4-73
2725394-0000	.FLAP HOLDER	4-51, 4-53, 4-55, 4-57, 4-59, 4-65, 4-67, 4-69, 4-71, 4-73
2725526-0000	.SCREW	1-53, 1-55, 1-57
2725530-0000	.ROLLER	1-105, 1-107, 1-109
2725531-0000	.ROLLER	1-105, 1-107, 1-109
2725532-0000	.ROLLER	1-105, 1-107, 1-109
2725564-0000	.WHEEL	1-161, 1-163
2725826-0000	.CLAMP	5-145, 5-147, 5-149
2725827-0000	.SPACER	5-145, 5-147, 5-149
2725981-0100	.SETTING TOOL	11-5
2725982-0100	.TEMPLATE	11-27
2726295-0000	.COVER STRIP	2-331
2726296-0000	.COVER STRIP	2-329
2726570-0200	.TUBE HOLDER	1-279, 1-281
2727659-0000	.PROTECTION PLATE	5-169, 5-171
2727703-0000	.GASKET	4-249, 4-251, 4-253
2728139-0000	.COVER STRIP	2-331
2728140-0000	.COVER STRIP	2-329
2728241-0000	.BRACKET	5-323, 5-325
2728883-0000	.OLDING FLAP	4-165, 4-167, 4-211, 4-213, 4-215, 4-217
2728884-0000	.OLDING FLAP	4-165, 4-167, 4-211, 4-213, 4-215, 4-217
2730770-0000	.SPACER	3-7, 3-9
2731210-0000	.SLEEVE	8-119, 11-75
2731212-0000	.RING	8-119, 11-75
2731217-0100	.PAPER REEL HOLDER	8-111, 8-113, 11-67
2731428-0000	.NUT	1-31, 1-33, 1-39, 1-41, 1-75, 1-77, 1-79, 1-87, 1-89, 1-91, 1-93

Part No	Description	Page No
2731434-0000	.LEVER	1-19
2731438-0000	.FILLING PIPE	1-245, 1-247, 1-249, 1-251
2731442-0000	.ROLLER	1-105, 1-107, 1-109
2731446-0000	.SUPPORT ROLLER	1-105, 1-107, 1-109
2731503-0000	.LOWER FORMING RING	1-75, 1-77, 1-79
2731506-0000	.LOWER FORMING RING	1-31, 1-33, 1-75, 1-77, 1-79
2731880-0001	.SHIM	8-97
2731880-0002	.SHIM	8-97
2732810-0000	.BRACKET	5-259, 5-261, 5-263, 5-265, 5-267, 5-269
2732811-0000	.RAIL	5-259, 5-261, 5-263, 5-265, 5-267, 5-269
2732812-0000	.RAIL	5-259, 5-261, 5-263, 5-265, 5-267, 5-269
2732814-0000	.BRACKET	5-259, 5-261, 5-263, 5-265, 5-267, 5-269
2732815-0000	.BRACKET	5-259, 5-261, 5-263, 5-265, 5-267, 5-269
2732819-0000	.RAIL	5-259, 5-261, 5-263, 5-265, 5-267, 5-269
2732820-0100	.RAIL OUT FEED	5-247, 5-249, 5-251
2732821-0000	.RAIL	5-259, 5-261, 5-263, 5-265, 5-267, 5-269
2732822-0000	.BRACKET	5-259, 5-261, 5-263, 5-265, 5-267, 5-269
2732824-0000	.RAIL	5-259, 5-261, 5-263, 5-265, 5-267, 5-269
2732825-0100	.RAIL	5-247, 5-249, 5-251
2732826-0000	.RAIL	5-259, 5-261, 5-263, 5-265, 5-267, 5-269
2732827-0000	.BRACKET	5-259, 5-261, 5-263, 5-265, 5-267, 5-269
2734100-0100	.PEROXIDE PUMP	2-15
2734101-0000	.EXTENSION PIPE	2-31
2734102-0000	.BUSHING	2-31
2734104-0000	.BUSHING	2-31
2734450-0000	.LEVER	5-289, 5-291, 5-293
2734451-0000	.LEVER	5-289, 5-291, 5-293
2734454-0000	.CARRIER	5-289, 5-291, 5-293
2734456-0000	.CARRIER	5-289, 5-291, 5-293
2734982-0100	.BRACKET	8-35, 8-37, 8-39
2734983-0000	.BRACKET	8-41, 8-43
2734984-0000	.SPACER DISC	8-41, 8-43
2734985-0100	.LEG	8-35, 8-37, 8-39
2734986-0000	.LEG	8-45
2735125-0000	.GUIDE UPPER	5-105, 5-107
2735126-0000	.GUIDE UPPER	5-105, 5-107
2735127-0000	.RAIL	5-115, 5-117, 5-119
2735128-0000	.RAIL	5-115, 5-117, 5-119
2735473-0000	.BRACKET	4-249, 4-251, 4-253
2735474-0000	.SLIDE	4-249, 4-251, 4-253
2736138-0000	.CARRIER RULER	4-165, 4-167
2736139-0000	.CARRIER RULER	4-211, 4-213, 4-215, 4-217
2736628-0000	.LOWER FORMING RING	1-75, 1-77, 1-79
2736629-0000	.LOWER FORMING RING	1-75, 1-77, 1-79
2736630-0000	.LOWER FORMING RING	1-75, 1-77, 1-79
2736631-0000	.UPPER FORMING RING	1-87, 1-89, 1-91, 1-93
2736632-0000	.UPPER FORMING RING	1-39, 1-41, 1-87, 1-89, 1-91, 1-93
2736633-0000	.UPPER FORMING RING	1-87, 1-89, 1-91, 1-93
2736634-0000	.UPPER FORMING RING	1-87, 1-89, 1-91, 1-93
2736635-0000	.UPPER FORMING RING	1-87, 1-89, 1-91, 1-93
2736636-0000	.UPPER FORMING RING	1-87, 1-89, 1-91, 1-93
2736676-0000	.UPPER FORMING RING	1-39, 1-41, 1-87, 1-89, 1-91, 1-93
2736677-0000	.UPPER FORMING RING	1-39, 1-41, 1-87, 1-89, 1-91, 1-93
2736697-0000	.UPPER FORMING RING	1-39, 1-41, 1-87, 1-89, 1-91, 1-93
2736702-0000	.BRACKET	1-367
2736705-0000	.LOWER FORMING RING	1-31, 1-33, 1-75, 1-77, 1-79
2736707-0000	.PIPE	1-255
2736719-0000	.PLATE	10-39
2737034-0000	.TIE ROD	4-143, 4-145, 4-199, 4-201
2737340-0100	.SPRAYING STATION	6-59
2737771-0000	.PLUNGER	4-173
2737772-0000	.PLUNGER	4-173
2737773-0000	.PLUNGER	4-173
2737841-0000	.BRACKET	8-245
2737842-0000	.BRACKET	8-245
2739682-0000	.SPACER SCREW	5-17, 5-19
2740795-0000	.FLANGE BUSHING	1-39, 1-41
2742199-0000	.BRACKET	8-235
2742200-0100	.VALVE PANEL	8-231, 8-233
2743319-0000	.SUPPORT	1-419
2743320-0000	.SUPPORT	1-419
2743397-0000	.SHIM	6-29, 6-31, 10-15, 10-17, 10-19, 10-21, 10-23, 10-25
2744234-0000	.SPACER	2-31
2745172-0000	.BRACKET	8-73
2745173-0000	.BAR	8-73
2745174-0000	.BRACKET	8-77, 8-79, 8-81
2745231-0000	.GUIDE	8-73, 8-77, 8-79, 8-81
2746136-0000	.SPRING	4-51, 4-53, 4-55, 4-57, 4-59, 4-65, 4-67, 4-69, 4-71, 4-73
2746137-0000	.SPRING	4-51, 4-53, 4-55, 4-57, 4-59, 4-65, 4-67, 4-69, 4-71, 4-73
2746712-0000	.CHECKER PLATE	2-229
2746721-0000	.COVER	2-279
2746750-0100	.DRIVE	6-3
2746751-0100	.DRIVE	6-15
2746752-0000	.CAP	6-17

Part No	Description	Page No
2746754-0000	.CAM	6-15
2746755-0000	.CAM	6-15
2746756-0100	.WHEEL	6-3
2746765-0100	.WHEEL	6-3
2746790-0000	.FOLDING DEVICE	5-25
2746791-0000	.FOLDING DEVICE	5-27
2747138-0000	.VOLUME FLAP	4-51, 4-53, 4-55, 4-57, 4-59, 4-65, 4-67, 4-69, 4-71, 4-73
2747139-0000	.CAM	4-223, 4-225
2747142-0000	.VOLUME FLAP	4-51, 4-53, 4-55, 4-57, 4-59, 4-65, 4-67, 4-69, 4-71, 4-73
2747630-0000	.BRACKET	9-49, 9-51
2748115-0000	.CRADLE	5-301, 5-303, 6-5, 6-7
2748216-0000	.CLAMP	1-289
2748217-0000	.CLAMP	1-289
2748218-0000	.TOUCH GUARD	1-289
2748219-0000	.TOUCH GUARD	1-289
2748220-0000	.HANGER	1-289
2748618-0000	.REEL HOLDER	8-61
2748619-0000	.SHAFT	8-73
2748621-0000	.BRACKET	8-61
2748622-0000	.COVER PLATE	8-273
2748623-0000	.COVER	8-83
2748624-0000	.COVER	8-83
2748625-0100	.COVER	8-35, 8-37, 8-39
2748626-0000	.COVER	8-65, 8-67
2748627-0000	.CABLE DUCT	8-65, 8-67
2748697-0000	.BRACKET	8-15
2748698-0000	.ADJUSTING SCREW	8-15
2748699-0000	.KNOB	8-15
2748701-0000	.BRACKET	9-49, 9-51
2748702-0000	.BRACKET	9-49, 9-51
2750544-0000	.SPACER	5-105, 5-107
2750776-0000	.BRACKET	6-73
2750805-0100	.COVER	8-35, 8-37, 8-39
2750806-0000	.COVER	8-69, 8-71
2750807-0000	.CABLE DUCT	8-69, 8-71
2750808-0000	.TEMPLATE	8-91, 8-93
2751466-0000	.SHAFT	1-19
2751478-0000	.ROLLER	1-39, 1-41, 1-87, 1-89, 1-91, 1-93
2751479-0000	.ROLLER	1-39, 1-41, 1-87, 1-89, 1-91, 1-93
2751480-0000	.ROLLER	1-87, 1-89, 1-91, 1-93
2751481-0000	.ROLLER	1-39, 1-41, 1-87, 1-89, 1-91, 1-93
2751482-0000	.ROLLER	1-39, 1-41, 1-87, 1-89, 1-91, 1-93
2751483-0000	.ROLLER	1-39, 1-41, 1-87, 1-89, 1-91, 1-93
2751518-0000	.TEMPLATE	11-27
2751788-0000	.CRADLE	5-301, 5-303, 6-5, 6-7
2752533-0000	.SPACER	5-105, 5-107
2752534-0000	.SPACER	5-115, 5-117, 5-119
2752647-0000	.GUIDE	5-153, 5-155
2752648-0000	.GUIDE	5-161, 5-163
2752754-0000	.RAIL	5-259, 5-261, 5-263, 5-265, 5-267, 5-269
2752756-0000	.RAIL	5-259, 5-261, 5-263, 5-265, 5-267, 5-269
2752758-0000	.RAIL	5-259, 5-261, 5-263, 5-265, 5-267, 5-269
2752759-0000	.BRACKET	5-259, 5-261, 5-263, 5-265, 5-267, 5-269
2752760-0000	.RAIL	5-259, 5-261, 5-263, 5-265, 5-267, 5-269
2755890-0100	.SUPPORT	8-35, 8-37, 8-39
2755891-0100	.COVER	8-257, 8-259, 8-261, 8-263
2755892-0100	.SUPPORT	8-35, 8-37, 8-39
2755893-0100	.COVER	8-35, 8-37, 8-39
2756091-0000	.VOLUME BULGE	6-29, 6-31
2756247-0000	.WASHER	11-67
2756349-0000	.SPACER	5-181, 5-183
2757847-0000	.PUSHER	5-231, 5-233, 5-235, 5-237, 5-239, 5-241
2758084-0000	.ROLLER	1-39, 1-41
2758085-0000	.ROLLER	1-39, 1-41
2759322-0000	.ROLLER	1-87, 1-89, 1-91, 1-93
2759323-0000	.ROLLER	1-87, 1-89, 1-91, 1-93
2759331-0000	.SHAFT	4-51, 4-53, 4-55, 4-57, 4-59, 4-65, 4-67, 4-69, 4-71, 4-73
2760089-0000	.STOP	5-181, 5-183
2760120-0000	.PLATE	5-181, 5-183
2760121-0000	.BAR	5-181, 5-183
2760125-0100	.SEPARATE ROOM	8-3, 8-5, 8-7, 8-9
2760126-0000	.SPACER	5-181, 5-183
2760313-0000	.PLATE	5-181, 5-183
2760963-0000	.COVER	2-285
2760964-0000	.RUBBER SEAL	2-285
2761017-0000	.SUPPORT RING	1-105, 1-107, 1-109
2761018-0000	.ROLLER	1-105, 1-107, 1-109
2761019-0000	.ROLLER	1-105, 1-107, 1-109
2761020-0000	.ROLLER	1-105, 1-107, 1-109
2761021-0000	.ROLLER	1-105, 1-107, 1-109
2761022-0000	.LOCK PLATE	1-105, 1-107, 1-109
2761928-0000	.KNOB	6-25, 6-27, 6-51, 6-53
2761946-0100	.TRANSFER	6-3
2761950-0000	.CRADLE	6-33

Part No	Description	Page No
2761951-0000	.CRADLE	6-33
2761956-0000	.DRIVE PULLEY	6-13
2761957-0000	.SPACER	6-13, 6-33
2761958-0000	.CRADLE	6-33
2761961-0000	.SHAFT	6-33
2761962-0000	.SPACER	6-33, 6-59
2761965-0000	.COLUMN	6-59
2761998-0000	.COUPLING	6-33
2762008-0100	.DRIVE	6-11, 6-59
2762014-0000	.SPACER	6-33
2763627-0000	.BRACKET	10-5
2763628-0000	.BRACKET	10-5
2763629-0000	.RAILING	10-5
2763632-0000	.PLATE	10-5
2763633-0000	.PLATE	10-5
2763948-0000	.BRACKET	1-257
2763949-0000	.ELBOW PIPE	1-285
2763962-0000	.BRACKET	1-351
2763966-0000	.PIPE	1-351
2763967-0000	.PIPE	1-351
2763968-0000	.SPACER	1-351
2763969-0000	.REDUCER	1-351
2763979-0000	.SHIM	1-175, 1-177
2763994-0000	.COVER	1-285
2764009-0000	.BRACKET	1-123
2764013-0000	.UPPER FORMING RING	1-39, 1-41, 1-87, 1-89, 1-91, 1-93
2764014-0000	.UPPER FORMING RING	1-39, 1-41, 1-87, 1-89, 1-91, 1-93
2764015-0000	.UPPER FORMING RING	1-87, 1-89, 1-91, 1-93
2764016-0000	.UPPER FORMING RING	1-87, 1-89, 1-91, 1-93
2764017-0000	.UPPER FORMING RING	1-39, 1-41, 1-87, 1-89, 1-91, 1-93
2764018-0000	.UPPER FORMING RING	1-87, 1-89, 1-91, 1-93
2764019-0000	.UPPER FORMING RING	1-87, 1-89, 1-91, 1-93
2764020-0000	.UPPER FORMING RING	1-87, 1-89, 1-91, 1-93
2764021-0000	.UPPER FORMING RING	1-87, 1-89, 1-91, 1-93
2764022-0000	.UPPER FORMING RING	1-39, 1-41, 1-87, 1-89, 1-91, 1-93
2764023-0000	.LOWER FORMING RING	1-31, 1-33, 1-75, 1-77, 1-79
2764024-0000	.LOWER FORMING RING	1-75, 1-77, 1-79
2764025-0000	.LOWER FORMING RING	1-75, 1-77, 1-79
2764026-0000	.LOWER FORMING RING	1-31, 1-33, 1-75, 1-77, 1-79
2764027-0000	.LOWER FORMING RING	1-31, 1-33, 1-75, 1-77, 1-79
2764028-0000	.LOWER FORMING RING	1-75, 1-77, 1-79
2764029-0000	.LOWER FORMING RING	1-75, 1-77, 1-79
2764030-0000	.LOWER FORMING RING	1-75, 1-77, 1-79
2764031-0000	.LOWER FORMING RING	1-75, 1-77, 1-79
2764032-0000	.SHAFT	1-31, 1-33, 1-75, 1-77, 1-79
2764033-0000	.SHAFT	1-31, 1-33, 1-75, 1-77, 1-79
2764034-0000	.SHAFT	1-39, 1-41, 1-87, 1-89, 1-91, 1-93
2764035-0000	.SHAFT	1-39, 1-41, 1-87, 1-89, 1-91, 1-93
2764036-0000	.KNOB	1-31, 1-33, 1-39, 1-41, 1-75, 1-77, 1-79, 1-87, 1-89, 1-91, 1-93
2764043-0000	.VOLUME FLAP	4-89, 4-91
2764044-0000	.VOLUME FLAP	4-83, 4-85
2764045-0000	.WEDGE	4-83, 4-85, 4-89, 4-91
2764046-0000	.VOLUME BULGE	4-83, 4-85, 4-89, 4-91
2764047-0000	.VOLUME SHIM	4-83, 4-85, 4-89, 4-91
2764048-0000	.SPACER	4-231, 4-233, 4-235, 4-237
2764049-0000	.VOLUME CAM	4-231, 4-233, 4-235, 4-237
2764050-0000	.VOLUME CAM	4-231, 4-233, 4-235, 4-237
2764286-0000	.CABLE DUCT	8-59
2764290-0100	.WEB GUIDE	8-73
2764291-0000	.BRACKET	8-73
2764292-0000	.CABLE DUCT	8-73
2764293-0000	.TEMPLATE	8-91, 8-93
2764294-0000	.TEMPLATE	8-91, 8-93
2764295-0100	.TOOLS AND TEMPLATES	8-35, 8-37, 8-39
2764297-0100	.CABLE DUCT	8-35, 8-37, 8-39
2764324-0000	.HOLD-DOWN	6-23
2764404-0000	.SPACER	2-243, 2-245, 2-247
2764475-0000	.ASSEMBLY TOOL	11-39
2764526-0000	.TOOL	11-5
2764527-0100	.ACCESSORIES	10-3
2764809-0000	.CANTILEVER	2-63
2765461-0000	.SWING FRAME	9-149, 9-151
2765462-0001	.COVERING PANEL	9-49, 9-51
2766751-0000	.RAIL	4-129, 4-131, 4-133
2766752-0000	.RAIL	4-187, 4-189, 4-191
2767105-0000	.PROTECTION PLATE	5-169, 5-171
2767234-0000	.INSULATING PIPE	5-199, 5-201, 5-203, 5-205, 5-207, 5-209
2767235-0000	.INSULATING PIPE	5-199, 5-201, 5-203, 5-205, 5-207, 5-209
2767236-0000	.INSULATING PIPE	5-199, 5-201, 5-203, 5-205, 5-207, 5-209
2767244-0000	.INSULATING PIPE	5-199, 5-201, 5-203, 5-205, 5-207, 5-209
2767478-0001	.ROLLER	4-243, 4-245, 10-15, 10-17, 10-19, 10-21, 10-23, 10-25
2767478-0002	.ROLLER	4-243, 4-245, 10-15, 10-17, 10-19, 10-21, 10-23, 10-25
2767478-0003	.ROLLER	10-15, 10-17, 10-19, 10-21, 10-23, 10-25
2767478-0004	.ROLLER	10-15, 10-17, 10-19, 10-21, 10-23, 10-25

Part No	Description	Page No
2767621-0000	.SPRING	5-309, 5-311
2767760-0000	.INDUCTOR	4-129, 4-131, 4-133, 4-187, 4-189, 4-191, 10-15, 10-17, 10-19, 10-21, 10-23, 10-25
2768908-0000	.STOPPER	4-51, 4-53, 4-55, 4-57, 4-59, 4-65, 4-67, 4-69, 4-71, 4-73
2768909-0000	.STOP	4-51, 4-53, 4-55, 4-57, 4-59, 4-65, 4-67, 4-69, 4-71, 4-73
2768910-0000	.FLAP HOLDER	4-51, 4-53, 4-55, 4-57, 4-59, 4-65, 4-67, 4-69, 4-71, 4-73
2769340-0000	.CAM	4-223, 4-225
2769546-0000	.SPACER	4-223, 4-225
2769607-0000	.PIPE	2-145, 2-147
2769608-0000	.PIPE	2-145, 2-147
2769610-0000	.PIPE	2-145, 2-147
2769619-0000	.PLATFORM	2-229
2769620-0000	.PLATFORM	2-229
2769843-0000	.BLOCK	5-5, 5-7
2769844-0000	.GRUB SCREW	5-5, 5-7
2769873-0000	.CUTTING TABLE	8-179, 8-181, 8-189, 8-191
2769874-0000	.SPACER	8-179, 8-181, 8-189, 8-191
2770115-0000	.SUPPORT	2-75
2770494-0000	.FILLING PIPE	1-245, 1-247, 1-249, 1-251
2770760-0000	.PLATE	5-301, 5-303
2770761-0000	.PLATE	5-301, 5-303
2770885-0000	.CONTROL PANEL DISPLAY	8-285
2771122-0000	.SPRING	4-51, 4-53, 4-55, 4-57, 4-59, 4-65, 4-67, 4-69, 4-71, 4-73
2771123-0000	.SPRING	4-51, 4-53, 4-55, 4-57, 4-59, 4-65, 4-67, 4-69, 4-71, 4-73
2771438-0000	.GUIDE	5-153, 5-155
2771439-0000	.PLATE	5-153, 5-155, 5-161, 5-163
2771440-0000	.SLIDE	5-153, 5-155
2771441-0000	.CURVE	4-231, 4-233, 4-235, 4-237
2771442-0000	.GUIDE	5-161, 5-163
2771443-0000	.SLIDE	5-161, 5-163
2771494-0000	.BOTTOM	5-91
2771550-0000	.CAM	4-223, 4-225
2771551-0000	.CAM	4-223, 4-225
2771574-0000	.PUSHER	5-231, 5-233, 5-235, 5-237, 5-239, 5-241
2772885-0000	.FOLDING PART	5-115, 5-117, 5-119
2772887-0000	.FOLDING PART	5-115, 5-117, 5-119
2772890-0000	.FOLDING PART	5-115, 5-117, 5-119
2772891-0000	.BRACKET	5-115, 5-117, 5-119
2772892-0000	.RAIL	5-115, 5-117, 5-119
2772921-0000	.PLATE	5-181, 5-183
2773080-0000	.PLATE	5-181, 5-183
2773525-0100	.CABLE HARNESS	2-183
2773929-0000	.STOPPER	4-51, 4-53, 4-55, 4-57, 4-59, 4-65, 4-67, 4-69, 4-71, 4-73
2774348-0000	.EXTENSION SHAFT	7-65, 7-67
2774372-0000	.TEMPLATE	10-37
2774373-0000	.TEMPLATE	10-37
2774374-0000	.TEMPLATE	10-37
2774452-0000	.SPACER	4-231, 4-233, 4-235, 4-237
2774454-0100	.COVER	2-261, 2-263
2774493-0000	.COMPRESSION SPRING	4-219, 10-15, 10-17, 10-19, 10-21, 10-23, 10-25
2774547-0000	.BEARING HOUSING	4-155, 4-157, 4-159, 4-161
2774548-0000	.BEARING HOUSING	4-155, 4-157, 4-159, 4-161
2774933-0100	.OUT FEED	6-3
2774935-0000	.SUPPORT	6-59
2774936-0000	.PUSHER	6-59
2774938-0000	.GUIDE	6-59
2774942-0000	.SUPPORT	6-59
2774953-0000	.RAIL	6-33, 6-59
2775100-0100	.INTEGRATED CLEANING UNIT	1-295
2775283-0000	.BEARING HOUSING	4-155, 4-157, 4-159, 4-161
2775284-0000	.BEARING HOUSING	4-155, 4-157, 4-159, 4-161
2775285-0000	.BEARING HOUSING	4-155, 4-157, 4-159, 4-161
2775286-0000	.BEARING HOUSING	4-155, 4-157, 4-159, 4-161
2775287-0000	.BEARING HOUSING	4-155, 4-157, 4-159, 4-161
2775288-0000	.BEARING HOUSING	4-155, 4-157, 4-159, 4-161
2775290-0000	.BEARING HOUSING	4-155, 4-157, 4-159, 4-161
2775292-0000	.BEARING HOUSING	4-155, 4-157, 4-159, 4-161
2775293-0000	.BEARING HOUSING	4-155, 4-157, 4-159, 4-161
2775359-0000	.FOLDING PART	5-115, 5-117, 5-119
2775360-0000	.FOLDING PART	5-115, 5-117, 5-119
2775361-0000	.RAIL	5-115, 5-117, 5-119
2775586-0000	.BRACKET	10-5
2775770-0102	.BRACKET	10-3
2776216-0000	.FOLDING PART	5-115, 5-117, 5-119
2776217-0000	.SPACER	5-115, 5-117, 5-119
2776589-0000	.PLATE	5-181, 5-183
2776825-0000	.BAR	5-161, 5-163
2776826-0000	.BAR	5-153, 5-155
2776895-0000	.CHECKER PLATE	2-229
2776896-0000	.CHECKER PLATE	2-229
2776897-0000	.CHECKER PLATE	2-229
2777401-0200	.FLAP HEATER	6-3
2777402-0000	.NOZZLE	6-43, 6-45
2777403-0000	.NOZZLE	6-43, 6-45
2777410-0000	.PLATE	6-43, 6-45

Part No	Description	Page No
2777418-0000	.SUPPORT	6-43, 6-45
2777422-0000	.TOP SECTION	6-43, 6-45
2777968-0000	.SPACER	1-257
2778300-0000	.ASSEMBLY TOOL	11-39
2778562-0000	.BOTTOM SECTION	1-321, 1-323
2778608-0100	.COVER	2-261, 2-263
2779738-0000	.GUIDE	5-145, 5-147, 5-149
2779739-0000	.GUIDE	5-145, 5-147, 5-149
2780072-0000	.RAIL	9-149, 9-151
2785993-0000	.CIRCUIT BOARD	8-285
2788618-0000	.CLAMP	1-283
2788619-0000	.CLAMP	1-283
2788635-0000	.TOUCH GUARD	1-419
2788636-0000	.TOUCH GUARD	1-419
2788637-0000	.COVERING PANEL	1-419
2788638-0000	.BRACKET	1-419
2789083-0100	.GUIDE ROLLER	8-35, 8-37, 8-39
2789084-0000	.ROLLER BRACKET	8-57
2789106-0000	.RAIL	9-123, 9-125
2789107-0100	.DOOR	9-49, 9-51
2789108-0000	.DOOR	9-61
2789109-0100	.DOOR	9-49, 9-51
2789110-0000	.DOOR	9-59
2789112-0000	.BRACKET	8-77, 8-79, 8-81
2789126-0000	.RAIL	9-55, 9-57
2789183-0000	.VOLUME BULGE	6-55, 6-57
2789196-0000	.FLANGE	6-13
2789197-0000	.SHAFT	6-13
2789200-0100	.END UNIT	6-59
2789209-0000	.PLATE	6-59
2789210-0200	.TOP FOLDER	6-3
2789215-0000	.ARCH	6-69
2789216-0000	.PLATE	6-59
2789217-0000	.HUB	6-17
2789218-0000	.SHAFT	6-17
2789219-0000	.SPACER	6-51, 6-53
2789220-0200	.PRESSURE DEVICE	6-3
2789223-0000	.MAIN SHAFT	6-33
2789228-0000	.PUSHER	6-55, 6-57
2789229-0000	.FLANGE	6-51, 6-53
2789230-0000	.PUSHER	6-51, 6-53
2789231-0000	.GUIDE	6-25, 6-27
2789232-0000	.FLANGE	6-17, 6-25, 6-27, 6-51, 6-53
2790429-0000	.SHUTTER	1-287
2790430-0000	.SHUTTER	1-287
2790431-0000	.SHUTTER	1-287
2790432-0000	.SHUTTER	1-287
2790433-0000	.BODY	1-287
2790434-0000	.PLATE	1-375
2790925-0000	.SLEEVE	8-119, 11-75
2790929-0000	.SHAFT	8-119, 11-75
2791090-0000	.COVER	8-55
2791162-0000	.SPACER SCREW	8-55
2791432-0100	.COVER	8-35, 8-37, 8-39
2792118-0000	.SUPPORT	7-21
2792119-0100	.FILTER	7-19
2792120-0000	.SUPPORT	7-21
2792300-0100	.DESIGN CORRECTION	4-257
2792301-0100	.DRIVE UNIT	4-289
2792302-0100	.DRIVE UNIT	4-289
2792304-0000	.PLATE	4-291
2792305-0000	.PLATE	4-293
2792306-0000	.TOOTHED PULLEY	4-291, 4-293
2792661-0100	.MOTOR UNIT	3-5, 3-29
2792662-0100	.MOTOR UNIT	3-5, 3-29
2792827-0000	.PIPE	2-133, 2-135, 2-137
2792828-0000	.ANGLE	2-133, 2-135, 2-137
2792837-0000	.CONVEYOR CHAIN	2-349, 2-351
2792838-0000	.BRACKET	2-349, 2-351
2792839-0000	.COVER PLATE	2-133, 2-135, 2-137
2792841-0000	.PIPE	2-133, 2-135, 2-137
2792843-0000	.BRACKET	2-145, 2-147
2792844-0000	.PIPE	2-133, 2-135, 2-137
2793319-0000	.PLATE	10-39
2793320-0100	.TEMPLATE	10-35
2793321-0000	.PLATE	10-39
2793322-0000	.PLATE	10-39
2793323-0000	.PLATE	10-39
2793324-0000	.PLATE	10-39
2793325-0000	.PLATE	10-39
2793326-0000	.PLATE	10-39
2793327-0000	.PLATE	10-39
2793328-0000	.PLATE	10-39
2793329-0000	.PLATE	10-39

Part No	Description	Page No
2793331-0000	.PLATE	10-39
2793351-0000	.UPPER FORMING RING	1-87, 1-89, 1-91, 1-93
2793360-0000	.HEATER	1-221
2793907-0000	.FASTENING PLATE	7-21
2793908-0000	.CONNECTOR	7-21
2794725-0000	.PLATE	1-61, 1-63, 1-65, 1-67, 1-69
2794726-0000	.RING	1-61, 1-63, 1-65, 1-67, 1-69
2794964-0000	.MOTOR BRACKET	2-95
2794965-0000	.SHAFT	2-95
2794967-0000	.COVER	2-95
2795023-0000	.BRACKET	4-249, 4-251, 4-253
2796492-0000	.MOUNTING PLATE	1-387, 1-389
2796652-0000	.BOTTOM	5-85, 5-87, 5-89, 10-11, 10-13
2797186-0000	.CONNECTION BOX	1-387, 1-389
2797439-0000	.FASTENING PLATE	2-109, 2-111, 2-113, 2-115, 4-249, 4-251, 4-253
2797465-0000	.SLIDE	4-249, 4-251, 4-253
2798288-0000	.VOLUME BULGE	6-57
2798289-0000	.VOLUME BULGE	6-55
2798294-0000	.WHEEL	6-19, 6-35
2798295-0000	.ARM	6-19, 6-35
2798296-0000	.FLAP	6-23, 6-41
2798298-0000	.BOTTOM	6-39
2798299-0000	.BOTTOM	6-37
2798304-0000	.BOTTOM	6-21
2799729-0000	.TEMPLATE	10-37
2799899-0000	.CLEANING TANK	1-305
2800104-0000	.HOSE	9-173
2800116-0000	.HOSE	9-173
2800296-0000	.BRACKET	4-249, 4-251, 4-253
2801571-0200	.SOFTWARE TPIH	9-11
2802611-0000	.SUPPORT PULLEY	3-21
2802612-0000	.BOTTOM	5-29, 5-31, 5-77, 5-79
2802624-0000	.AXLE PIN	3-21
2802625-0000	.SHAFT	3-23
2802756-0000	.PULLEY	3-21
2803072-0100	.PULLEY	3-13, 3-31
2803220-0000	.BRACKET	1-125, 1-127
2803221-0000	.BRACKET	1-125, 1-127
2803986-0000	.STOP PIN	1-245, 1-247, 1-249, 1-251
2803987-0000	.STOP PIN	1-245, 1-247, 1-249, 1-251
2804288-0000	.BRACKET	5-259, 5-261, 5-263, 5-265, 5-267, 5-269
2804289-0000	.BRACKET	5-259, 5-261, 5-263, 5-265, 5-267, 5-269
2804290-0000	.BRACKET	5-259, 5-261, 5-263, 5-265, 5-267, 5-269
2804291-0000	.BRACKET	5-259, 5-261, 5-263, 5-265, 5-267, 5-269
2804292-0000	.BRACKET	5-259, 5-261, 5-263, 5-265, 5-267, 5-269
2804293-0000	.BRACKET	5-259, 5-261, 5-263, 5-265, 5-267, 5-269
2804294-0000	.BRACKET	5-259, 5-261, 5-263, 5-265, 5-267, 5-269
2804295-0000	.BRACKET	5-259, 5-261, 5-263, 5-265, 5-267, 5-269
2804298-0000	.BRACKET	5-259, 5-261, 5-263, 5-265, 5-267, 5-269
2804299-0000	.BRACKET	5-259, 5-261, 5-263, 5-265, 5-267, 5-269
2804300-0000	.BRACKET	5-259, 5-261, 5-263, 5-265, 5-267, 5-269
2804301-0000	.BRACKET	5-259, 5-261, 5-263, 5-265, 5-267, 5-269
2804302-0000	.BRACKET	5-259, 5-261, 5-263, 5-265, 5-267, 5-269
2804303-0000	.BRACKET	5-259, 5-261, 5-263, 5-265, 5-267, 5-269
2804304-0000	.BRACKET	5-259, 5-261, 5-263, 5-265, 5-267, 5-269
2804305-0000	.BRACKET	5-259, 5-261, 5-263, 5-265, 5-267, 5-269
2804306-0000	.BRACKET	5-259, 5-261, 5-263, 5-265, 5-267, 5-269
2804307-0000	.BRACKET	5-259, 5-261, 5-263, 5-265, 5-267, 5-269
2804308-0000	.BRACKET	5-259, 5-261, 5-263, 5-265, 5-267, 5-269
2804309-0000	.BRACKET	5-259, 5-261, 5-263, 5-265, 5-267, 5-269
2804310-0000	.BRACKET	5-259, 5-261, 5-263, 5-265, 5-267, 5-269
2804311-0000	.BRACKET	5-259, 5-261, 5-263, 5-265, 5-267, 5-269
2804312-0000	.BRACKET	5-259, 5-261, 5-263, 5-265, 5-267, 5-269
2804313-0000	.BRACKET	5-259, 5-261, 5-263, 5-265, 5-267, 5-269
2804314-0000	.BRACKET	5-259, 5-261, 5-263, 5-265, 5-267, 5-269
2804857-0000	.SPACER SCREW	5-115, 5-117, 5-119
2805164-0000	.SHAFT	6-25, 6-27
2805167-0000	.WASHER	6-25, 6-27
2805169-0000	.SHAFT	6-25, 6-27
2805170-0000	.PLATE	6-25, 6-27
2805171-0000	.VOLUME BULGE	6-25, 6-27
2805172-0000	.VOLUME BULGE	6-25, 6-27
2805174-0000	.CAM	6-25, 6-27, 6-51, 6-53
2805182-0000	.PUSHER	6-29, 6-31
2805183-0000	.CAP	6-25, 6-27, 6-51, 6-53
2805184-0000	.DAMPER	6-25, 6-27
2805185-0000	.FLANGE	6-17, 6-25, 6-27, 6-51, 6-53
2805186-0000	.CLAMP	6-25, 6-27, 6-51, 6-53
2805188-0000	.LEVER	6-25, 6-27, 6-51, 6-53
2805192-0000	.SHAFT	6-51, 6-53
2805193-0000	.BUSHING	6-19, 6-25, 6-27, 6-35, 6-51, 6-53
2805198-0000	.CAP	6-25, 6-27, 6-51, 6-53
2805199-0000	.GUIDE	6-51, 6-53
2805201-0000	.LEVER	6-51, 6-53

Part No	Description	Page No
2805208-0000	.PLUG	6-25, 6-27, 6-51, 6-53
2805209-0000	.LOCK NUT	6-25, 6-27, 6-51, 6-53
2805210-0000	.SHAFT	6-25, 6-27
2805214-0000	.BRACKET	5-259, 5-261, 5-263, 5-265, 5-267, 5-269
2805215-0000	.BRACKET	5-259, 5-261, 5-263, 5-265, 5-267, 5-269
2807147-0000	.SPACER	6-25, 6-27
2807149-0000	.SPACER	6-25, 6-27
2807151-0000	.BUSHING	6-25, 6-27, 6-51, 6-53
2807152-0000	.SPACER	6-29, 6-31
2807156-0000	.BRACKET	6-5, 6-7
2807157-0000	.CAP	6-25, 6-27, 6-51, 6-53
2807160-0000	.BOX	6-25, 6-27
2807161-0000	.PLATE	2-141
2807162-0000	.PLATE	2-141
2807163-0000	.PLATE	2-141
2807166-0000	.BRACKET	6-43, 6-45
2807168-0000	.SUPPORT	6-43, 6-45
2807169-0000	.FRAME	6-43, 6-45
2807181-0000	.SUPPORT	6-25, 6-27, 6-51, 6-53
2807182-0000	.CLAMP	6-25, 6-27, 6-51, 6-53
2807183-0000	.SCREW	6-25, 6-27, 6-51, 6-53
2807185-0000	.SPRING	6-25, 6-27
2807186-0000	.SUPPORT	6-69
2807190-0100	.PLATE	2-133, 2-135, 2-137
2807592-0000	.MULTI BRACKET SINGLE	10-5
2807605-0101	.LEG,CONVEYOR	10-5
2807615-0000	.LEG,CONVEYOR	10-7
2808422-0000	.FILTER	1-143, 1-145
2809845-0000	.STOP PIN	1-245, 1-247, 1-249, 1-251
2809846-0000	.STOP PIN	1-245, 1-247, 1-249, 1-251
2809847-0000	.STOP PIN	1-245, 1-247, 1-249, 1-251
2809849-0000	.STOP PIN	1-245, 1-247, 1-249, 1-251
2809850-0000	.PRESSURE FLANGE	1-245, 1-247, 1-249, 1-251
2809851-0000	.PRESSURE FLANGE	1-245, 1-247, 1-249, 1-251
2810647-0000	.FRAME	2-133, 2-135, 2-137
2810648-0000	.CHUTE	2-349, 2-351
2810651-0100	.DOOR	2-261, 2-263
2810652-0100	.COVER	2-261, 2-263
2810654-0100	.COVER	2-261, 2-263
2810655-0100	.DOOR	2-261, 2-263
2810656-0100	.DOOR	2-261, 2-263
2810657-0100	.DOOR	2-261, 2-263
2810658-0100	.COVER	2-261, 2-263
2810660-0000	.COVER	2-299
2810661-0000	.DOOR	2-303
2810662-0000	.COVER	2-305
2810663-0000	.COVER	2-301
2810664-0000	.DOOR	2-317
2810665-0000	.DOOR	2-307
2810666-0000	.DOOR	2-313
2810668-0000	.GLASS PANE	2-313
2810669-0000	.RUBBER SEAL	2-317
2810670-0000	.GLASS PANE	2-303
2810671-0000	.DOOR	2-323
2811775-0000	.SEAL	1-61, 1-63, 1-65, 1-67, 1-69, 10-15, 10-17, 10-19, 10-21, 10-23, 10-25
2811834-0002	.RECORDER CD	9-15
2812188-0000	.GLASS PANE	2-323
2812189-0000	.GLASS PANE	2-323
2812190-0000	.SUPPORT	2-307
2812191-0000	.LOCKING ARM	2-307
2812192-0000	.LOCKING ARM	2-307, 2-313
2812195-0000	.PROFILE	2-323
2812196-0000	.LOCKING ARM	2-313
2812327-0100	.CONTROL PANEL	11-3
2812328-0100	.CABLE HARNESS	11-81
2812397-0100	.FIXING UNIT	8-35, 8-37, 8-39
2812398-0000	.PLATE	8-85
2812399-0000	.MOUNTING BAR	8-85
2812400-0000	.PLATE	8-85
2812556-0000	.HEAT GUARD	1-351
2812727-0000	.RUBBER SEAL	2-301
2812728-0000	.RUBBER SEAL	2-299
2812890-0000	.FLAP HOLDER	4-51, 4-53, 4-55, 4-57, 4-59, 4-65, 4-67, 4-69, 4-71, 4-73
2812891-0000	.HOLDER	4-129, 4-131, 4-133, 4-187, 4-189, 4-191
2813335-0000	.RUBBER SEAL	2-303
2813872-0000	.PROFILE	2-323
2813873-0000	.RUBBER SEAL	2-323
2813874-0000	.RUBBER SEAL	2-323
2813875-0000	.RUBBER SEAL	2-307
2813876-0000	.RUBBER SEAL	2-313
2813877-0000	.RUBBER SEAL	2-305
2813879-0000	.COVER	2-323
2815745-0000	.GASKET	11-83
2817745-0000	.PLATE	2-139

Part No	Description	Page No
2817746-0000	.PLATE	2-139
2817747-0000	.PLATE	2-139
2817748-0000	.PLATE	2-139
2817750-0000	.CABLE	2-139
2817751-0000	.CABLE	2-139
2817752-0000	.CABLE	2-139
2817753-0000	.CABLE	2-139
2817754-0100	.CABLE DUCT	2-133, 2-135, 2-137
2817769-0000	.LID	2-139
2817770-0000	.LID	2-139
2817771-0000	.LID	2-139
2817772-0000	.LID	2-139
2817773-0000	.LID	2-139
2817789-0000	.SHAFT	4-51, 4-53, 4-55, 4-57, 4-59, 4-65, 4-67, 4-69, 4-71, 4-73
2818313-0000	.TEMPLATE	10-37
2818564-0000	.CARRIER	5-289, 5-291, 5-293
2821398-0000	.WASHER	2-95
2825345-0004	.TPOP CD	11-91
2825375-0000	.VOLUME FLAP	4-51, 4-53, 4-55, 4-57, 4-59
2825376-0000	.VOLUME FLAP	4-65, 4-67, 4-69, 4-71, 4-73
2825377-0000	.CANTILEVER	4-51, 4-53, 4-55, 4-57, 4-59, 4-65, 4-67, 4-69, 4-71, 4-73
2825378-0000	.STOPPER	4-51, 4-53, 4-55, 4-57, 4-59, 4-65, 4-67, 4-69, 4-71, 4-73
2825379-0000	.HOLDER	4-155, 4-157, 4-159, 4-161
2826389-0000	.SPRING	1-245, 1-247, 1-249, 1-251
2826390-0000	.SPRING	1-245, 1-247, 1-249, 1-251
2826391-0000	.SPRING	1-245, 1-247, 1-249, 1-251
2826392-0000	.SPRING	1-245, 1-247, 1-249, 1-251
2826393-0000	.SPRING	1-245, 1-247, 1-249, 1-251
2826395-0000	.SPRING	1-245, 1-247, 1-249, 1-251
2826396-0000	.SPRING	1-245, 1-247, 1-249, 1-251
2826397-0000	.SPRING	1-245, 1-247, 1-249, 1-251
2826410-0000	.ROLLER	1-123
2826436-0000	.PIPE	1-265
2826437-0000	.ECCENTRIC	1-279, 1-281
2826438-0000	.BODY	1-267
2826439-0000	.VALVE CONE	1-271
2826440-0000	.SEAL RING	1-271
2826441-0000	.SEAL RING	1-269, 1-273
2826442-0000	.VALVE CONE	1-269, 1-273
2826444-0000	.BENDING ROLLER	1-321, 1-323
2826452-0000	.FLOAT	1-245, 1-247, 1-249, 1-251
2826453-0000	.FLOAT	1-245, 1-247, 1-249, 1-251
2826454-0000	.FLOAT	1-245, 1-247, 1-249, 1-251
2826455-0000	.FLOAT	1-245, 1-247, 1-249, 1-251
2826456-0000	.FLOAT	1-245, 1-247, 1-249, 1-251
2826457-0000	.FLOAT	1-245, 1-247, 1-249, 1-251
2826458-0000	.PRESSURE FLANGE	1-245, 1-247, 1-249, 1-251
2826463-0000	.FILLING PIPE	1-245, 1-247, 1-249, 1-251
2826464-0000	.FILLING PIPE	1-245, 1-247, 1-249, 1-251
2826465-0000	.FILLING PIPE	1-245, 1-247, 1-249, 1-251
2826467-0000	.FILLING PIPE	1-245, 1-247, 1-249, 1-251
2826470-0000	.FILLING PIPE	1-245, 1-247, 1-249, 1-251
2826471-0000	.FILLING PIPE	1-245, 1-247, 1-249, 1-251
2826472-0000	.FILLING PIPE	1-245, 1-247, 1-249, 1-251
2826473-0000	.FILLING PIPE	1-245, 1-247, 1-249, 1-251
2826474-0000	.FILLING PIPE	1-245, 1-247, 1-249, 1-251
2826478-0000	.FILLING PIPE	1-245, 1-247, 1-249, 1-251
2826479-0000	.FILLING PIPE	1-245, 1-247, 1-249, 1-251
2826596-0000	.STOPPER	4-51, 4-53, 4-55, 4-57, 4-59, 4-65, 4-67, 4-69, 4-71, 4-73
2826618-0100	.SOFTWARE TPOP	11-81
2826649-0000	.BRACKET	9-77, 9-79, 9-81, 9-83, 9-85
2826677-0000	.MAIN BODY	6-25, 6-27
2826678-0000	.SUPPORT	6-25, 6-27
2826679-0000	.SHAFT	6-25, 6-27
2826700-0200	.MOTOR	6-3
2826702-0000	.BODY	6-33
2826703-0000	.FLANGE	6-33
2826705-0000	.GUIDE	6-59
2826710-0100	.FORMING PLATE	6-25, 6-27
2826713-0000	.SUPPORT	6-25, 6-27
2826714-0000	.SUPPORT	6-25, 6-27
2826717-0000	.LEVER	6-25, 6-27
2826718-0000	.LEVER	6-25, 6-27
2826720-0200	.FORMING PLATE	6-51, 6-53
2826722-0100	.OUT FEED	6-59
2826723-0000	.SPACER	6-33
2826724-0000	.FLANGE	6-33
2827055-0000	.VOLUME SHIM	4-51, 4-53, 4-55, 4-57, 4-59, 4-65, 4-67, 4-69, 4-71, 4-73, 10-15, 10-17, 10-19, 10-21, 10-23, 10-25
2827933-0000	.PALLET	2-143
2827934-0000	.PLATE	2-143
2827935-0000	.SEALING STRIP	2-133, 2-135, 2-137
2827936-0000	.SEALING STRIP	2-133, 2-135, 2-137
2827937-0000	.SHAFT	2-143

Part No	Description	Page No
2829261-0000	.BUSHING	4-51, 4-53, 4-55, 4-57, 4-59, 4-65, 4-67, 4-69, 4-71, 4-73
2829288-0000	.COVERING PLATE	1-237, 1-239
2829385-0000	.PLATE	5-181, 5-183
2829763-0000	.PLATE	5-181, 5-183
2829764-0000	.LID	1-305
2829765-0000	.PIPE	1-309
2829766-0000	.SEALING	1-305
2829767-0000	.PIPE	1-309
2829769-0000	.PIPE	1-303
2829770-0100	.CENTRIFUGAL PUMP	1-301
2830210-0000	.STOP	5-181, 5-183
2830238-0100	.COVER	2-133, 2-135, 2-137
2830239-0000	.PLATE	2-139
2830240-0000	.CABLE	2-139
2830359-0000	.STOP	5-181, 5-183
2831672-0000	.SLIDE PLATE	8-167
2831673-0000	.SLIDE PLATE	8-167
2831674-0000	.ROLLER	8-167, 8-169, 8-171, 8-173
2831675-0000	.BRACKET	8-155
2831676-0000	.BRACKET	8-155
2831677-0000	.SUPPORT	8-175
2831678-0000	.SUPPORT	8-175
2831679-0000	.ROLLER	8-135
2831680-0000	.ROLLER	8-135, 8-143
2831681-0000	.ROLLER	8-135
2831682-0000	.ROLLER	8-135
2831683-0000	.ROLLER	8-135
2831684-0000	.ROLLER	8-135
2831685-0000	.ROLLER	8-17
2831686-0000	.ROLLER	8-15
2831687-0000	.GUIDE WHEEL	8-15
2831688-0000	.ROLLER	8-241
2832350-0000	.STOP	4-51, 4-53, 4-55, 4-57, 4-59, 4-65, 4-67, 4-69, 4-71, 4-73
2832351-0000	.STOP	4-51, 4-53, 4-55, 4-57, 4-59, 4-65, 4-67, 4-69, 4-71, 4-73
2832463-0000	.SUPPORT	1-343
2832553-0000	.FILLING PIPE	1-245, 1-247, 1-249, 1-251
2832554-0000	.FILLING PIPE	1-245, 1-247, 1-249, 1-251
2832555-0000	.FILLING PIPE	1-245, 1-247, 1-249, 1-251
2832620-0000	.CLEANING CUP	1-297, 1-299
2832865-0100	.COVER	8-3, 8-5, 8-7, 8-9
2832866-0000	.COVER	8-11
2832867-0000	.ROLLER	2-95
2832868-0100	.STEERING DEVICE	2-93
2833035-0000	.CLEANING CUP	1-297, 1-299
2833036-0000	.CLEANING CUP	1-297, 1-299
2833037-0000	.SEAL RING	1-269
2833038-0000	.BODY	1-267
2833039-0000	.PIPE	1-265
2833041-0000	.BENDING ROLLER	1-155, 1-157
2833042-0000	.BENDING ROLLER	1-155, 1-157
2833043-0000	.ELBOW PIPE	1-279, 1-281
2833046-0000	.CONNECTING PIPE	1-279, 1-281
2833047-0000	.CONNECTING PIPE	1-279, 1-281
2833054-0000	.ROLLER	1-341
2833085-0000	.ROLLER	1-75, 1-77, 1-79
2833086-0000	.ROLLER	1-75, 1-77, 1-79
2833088-0000	.ROLLER	1-87, 1-89, 1-91, 1-93
2833167-0000	.BENDING ROLLER	1-321, 1-323
2833212-0000	.ROLLER	1-87, 1-89, 1-91, 1-93
2833215-0000	.ROLLER	1-75, 1-77, 1-79
2833237-0000	.CABLE	1-399, 1-401
2833334-0000	.BRACKET	8-11
2833342-0000	.STEERING DEVICE	2-95
2833345-0000	.PIPE	1-307
2833348-0000	.DRAIN PIPE	1-303
2833349-0000	.STEAM PIPE	1-291
2833350-0100	.PIPE WORK	1-295
2833351-0000	.SUPPORT	1-303
2833352-0000	.PIPE	2-127
2833354-0100	.PIPE-LINE	1-301
2834329-0000	.PIPE	1-279, 1-281
2834330-0000	.VOLUME CAM	4-231, 4-233, 4-235, 4-237
2834331-0000	.VOLUME CAM	4-231, 4-233, 4-235, 4-237
2836001-0000	.GUIDE	5-259, 5-261, 5-263, 5-265, 5-267, 5-269
2836002-0000	.GUIDE	5-259, 5-261, 5-263, 5-265, 5-267, 5-269
2836242-0000	.SUPPORT	6-25, 6-27
2836243-0000	.SUPPORT	6-25, 6-27
2836244-0000	.PLATE	6-25, 6-27
2836247-0000	.TOOL	6-25, 6-27
2836248-0000	.TOOL	6-25, 6-27
2836249-0000	.TOOL	6-29
2836250-0000	.TOOL	6-31
2836291-0000	.PIPE	2-347
2837065-0000	.BOTTOM	5-29, 5-31

Part No	Description	Page No
2837100-0100	.CLEANING TANK	1-301
2837177-0000	.LEG	8-51, 8-53, 11-7, 11-9
2838217-0100	.FORMING PLATE	6-25, 6-27
2838218-0200	.FORMING PLATE	6-51, 6-53
2838219-0000	.LOCK WASHER	6-17, 6-25, 6-27, 6-51, 6-53
2838220-0000	.ROUND NUT	6-17, 6-25, 6-27, 6-51, 6-53
2838224-0000	.SHIM	6-29, 6-31, 10-15, 10-17, 10-19, 10-21, 10-23, 10-25
2838226-0000	.PUSHER	6-55, 6-57
2838227-0000	.PUSHER	6-29, 6-31
2838228-0000	.SHIM	6-55, 6-57, 10-15, 10-17, 10-19, 10-21, 10-23, 10-25
2838229-0000	.VOLUME BULGE	6-55, 6-57
2838235-0000	.GUIDE	6-69
2838351-0000	.STOPPER	4-51, 4-53, 4-55, 4-57, 4-59, 4-65, 4-67, 4-69, 4-71, 4-73
2838479-0000	.FLAP HOLDER	4-51, 4-53, 4-55, 4-57, 4-59, 4-65, 4-67, 4-69, 4-71, 4-73
2838629-0000	.STOPPER	4-51, 4-53, 4-55, 4-57, 4-59, 4-65, 4-67, 4-69, 4-71, 4-73
2839175-0000	.VOLUME FLAP	4-51, 4-53, 4-55, 4-57, 4-59, 4-65, 4-67, 4-69, 4-71, 4-73
2839410-0000	.STOPPER	4-51, 4-53, 4-55, 4-57, 4-59, 4-65, 4-67, 4-69, 4-71, 4-73
2839411-0000	.FLAP HOLDER	4-51, 4-53, 4-55, 4-57, 4-59, 4-65, 4-67, 4-69, 4-71, 4-73
2839678-0000	.FLAP HOLDER	4-51, 4-53, 4-55, 4-57, 4-59, 4-65, 4-67, 4-69, 4-71, 4-73
2839679-0000	.STOPPER	4-51, 4-53, 4-55, 4-57, 4-59, 4-65, 4-67, 4-69, 4-71, 4-73
2839822-0000	.STOP	4-51, 4-53, 4-55, 4-57, 4-59, 4-65, 4-67, 4-69, 4-71, 4-73
2841125-0000	.CABLE DUCT	9-77, 9-79, 9-81, 9-83, 9-85
2841128-0000	.MOUNTING PLATE	9-97, 9-99
2841130-0000	.CABLE DUCT	9-77, 9-79, 9-81, 9-83, 9-85
2841131-0000	.CABLE DUCT	9-97, 9-99
2841132-0100	.PLC	9-77, 9-79, 9-81, 9-83, 9-85
2841133-0100	.MOTOR DRIVE CONTROL	9-77, 9-79, 9-81, 9-83, 9-85
2841497-0000	.RAIL	9-77, 9-79, 9-81, 9-83, 9-85
2841498-0000	.GASKET	9-71, 9-73
2841499-0000	.PLATE	9-71, 9-73
2841531-0100	.PLINTH	9-97, 9-99
2841532-0100	.PLINTH	9-77, 9-79, 9-81, 9-83, 9-85
2841895-0000	.INDUCTOR	4-129, 4-131, 4-133, 4-187, 4-189, 4-191
2841926-0000	.CABINET	9-19
2841927-0000	.FRAME	9-35
2841928-0000	.COVER	9-19
2841929-0000	.DOOR	9-43
2841930-0000	.DOOR	9-45
2841931-0100	.DOOR	9-19
2841932-0100	.DOOR	9-19
2841933-0100	.COVER	9-19
2841934-0100	.RACK	9-19
2841938-0100	.ELECTRICAL CABINET	9-3, 9-5
2841939-0000	.FRAME	9-21
2841940-0100	.BOX	9-19
2841941-0100	.CONTROL PANEL	9-19
2842918-0000	.HOLDER	2-243, 2-245, 2-247
2842999-0000	.CABINET	7-11
2843000-0000	.DOOR	7-65, 7-67
2843006-0000	.STOP	4-51, 4-53, 4-55, 4-57, 4-59, 4-65, 4-67, 4-69, 4-71, 4-73
2843151-0000	.COVER	2-343, 2-345
2843152-0000	.COVER	2-343, 2-345
2843153-0000	.CABLE DUCT	2-343, 2-345
2843154-0000	.CABLE DUCT	2-343, 2-345
2843155-0000	.COVER	2-343, 2-345
2843780-0000	.PLATE	4-165, 4-167, 4-211, 4-213, 4-215, 4-217
2843850-0000	.FOLDING FLAP	4-165, 4-167, 4-211, 4-213, 4-215, 4-217
2843851-0000	.FOLDING FLAP	4-165, 4-167, 4-211, 4-213, 4-215, 4-217
2843899-0000	.SHIM	6-29, 6-31, 10-15, 10-17, 10-19, 10-21, 10-23, 10-25
2843900-0000	.VOLUME BULGE	6-29, 6-31
2843901-0000	.PUSHER	6-55, 6-57
2843902-0000	.PUSHER	6-29, 6-31
2843903-0000	.SHIM	6-55, 6-57, 10-15, 10-17, 10-19, 10-21, 10-23, 10-25
2843904-0000	.VOLUME BULGE	6-55, 6-57
2843970-0200	.INFEED	6-3
2843973-0000	.SPACER	6-11
2843976-0000	.FLANGE	6-11
2844043-0000	.SLIDE	1-161, 1-163
2844044-0000	.SLIDE	1-161, 1-163
2844045-0000	.SLIDE	1-161, 1-163
2844046-0000	.SLIDE	1-161, 1-163
2844047-0000	.SLIDE	1-161, 1-163
2844054-0000	.PROTECTION	9-123, 9-125
2844055-0001	.WELDED CABINET	9-49, 9-51
2844056-0000	.MOUNTING PLATE	9-77, 9-79, 9-81, 9-83, 9-85
2844057-0000	.MOUNTING PLATE	9-77, 9-79, 9-81, 9-83, 9-85
2844776-0000	.VOLUME BULGE	4-51, 4-53, 4-55, 4-57, 4-59, 4-65, 4-67, 4-69, 4-71, 4-73
2844777-0000	.VOLUME SHIM	4-51, 4-53, 4-55, 4-57, 4-59, 4-65, 4-67, 4-69, 4-71, 4-73
2846042-0001	.TPOP BASIC VERSION 2.0	9-13
2846043-0001	.TPOP BASIC WINDOWS OEM W2000 PROGRAM	9-13
2846185-0000	.ROLLER	4-51, 4-53, 4-55, 4-57, 4-59, 4-65, 4-67, 4-69, 4-71, 4-73
2846309-0000	.BRACKET	1-245, 1-247, 1-249, 1-251
2846311-0000	.FORK	1-245, 1-247, 1-249, 1-251
2846393-0000	.ROLLER	1-39, 1-41

Part No	Description	Page No
2846394-0000	.ROLLER	1-39, 1-41
2846395-0000	.ROLLER	1-39, 1-41
2846567-0000	.ROLLER	1-31, 1-33
2846670-0000	.STOPPER	4-51, 4-53, 4-55, 4-57, 4-59, 4-65, 4-67, 4-69, 4-71, 4-73
2846698-0000	.CABLE	9-157, 9-161
2846997-0000	.VOLUME BULGE	4-51, 4-53, 4-55, 4-57, 4-59, 4-65, 4-67, 4-69, 4-71, 4-73
2847310-0000	.CONNECTION	1-285
2847313-0000	.NUT	1-305
2848490-0000	.GUIDE	5-161, 5-163
2848491-0000	.GUIDE	5-153, 5-155
2848492-0000	.GUIDE	5-161, 5-163
2848493-0000	.GUIDE	5-153, 5-155
2849961-0000	.GUIDE	5-115, 5-117, 5-119
2849962-0000	.GUIDE	5-115, 5-117, 5-119
2850064-0100	.ELECTRICAL CONNECTION	8-35, 8-37, 8-39
2850478-0000	.SPACER	4-231, 4-233, 4-235, 4-237
2850479-0000	.RAIL BRACKET	4-231, 4-233, 4-235, 4-237
2850480-0000	.CURVE	4-231, 4-233, 4-235, 4-237
2850481-0000	.SPACER	5-307, 5-313, 5-315
2850659-0000	.CABLE DUCT	9-97, 9-99
2850660-0000	.DIVIDER	9-97, 9-99
2850662-0000	.DIVIDER	9-77, 9-79, 9-81, 9-83, 9-85
2850663-0000	.DIVIDER	9-77, 9-79, 9-81, 9-83, 9-85
2851036-0000	.FUSE PANEL LABEL	9-67
2851385-0000	.PLUNGER	8-119, 11-75
2851583-0000	.ROLLER	1-87, 1-89, 1-91, 1-93
2851586-0000	.ROLLER	1-87, 1-89, 1-91, 1-93
2851593-0000	.RAIL	5-259, 5-261, 5-263, 5-265, 5-267, 5-269
2851645-0000	.SPACER	5-115, 5-117, 5-119
2851646-0000	.SPACER	5-115, 5-117, 5-119
2851883-0000	.PIPE	1-307
2851885-0000	.PIPE	1-235
2851886-0000	.CENTRIFUGAL PUMP	1-303
2851926-0000	.YOKE	5-17, 5-19
2851927-0000	.SHAFT	5-17, 5-19
2851929-0000	.STRUT	5-21, 5-23
2852009-0000	.BRACKET	5-105, 5-107
2852122-0000	.BOX	6-51, 6-53
2852191-0000	.SUPPORT	6-11
2852228-0000	.ECCENTRIC SHAFT	5-307, 5-313, 5-315
2852310-0100	.SOFTWARE PLC MOTION	9-11
2854052-0000	.RAIL BRACKET	4-231, 4-233, 4-235, 4-237
2854053-0000	.RAIL BRACKET	4-231, 4-233, 4-235, 4-237
2854056-0000	.BRACKET	4-231, 4-233, 4-235, 4-237
2854110-0000	.RAIL	5-259, 5-261, 5-263, 5-265, 5-267, 5-269
2854963-0000	.SIDE PLATE	5-301, 5-303, 10-11, 10-13
2854964-0000	.SIDE PLATE	5-301, 5-303, 10-11, 10-13
2856532-0000	.SPACER	2-349, 2-351
2856533-0000	.BRACKET	2-139
2859597-0000	.SPACER	4-51, 4-53, 4-55, 4-57, 4-59, 4-65, 4-67, 4-69, 4-71, 4-73
2860106-0000	.SLIDE	5-153, 5-155
2860107-0000	.SLIDE	5-161, 5-163
2861062-0000	.PANEL	9-27
2861064-0000	.COVER	9-41
2861067-0100	.DISTRIBUTION TERMINAL	9-21
2861068-0100	.DISTRIBUTION TERMINAL	9-21
2861069-0100	.DISTRIBUTION TERMINAL	9-27
2861070-0100	.DISTRIBUTION TERMINAL	9-27
2861071-0100	.DISTRIBUTION TERMINAL	9-27
2861072-0100	.POWER SUPPLY UNIT	9-35
2861073-0000	.FRAME	9-35
2861101-0000	.CABLE DUCT	9-27
2861573-0000	.BRACKET	4-249, 4-251, 4-253
2862307-0000	.LEVER	4-93, 4-95, 4-97, 4-99
2862308-0000	.DAMPER	4-93, 4-95, 4-97, 4-99
2862739-0000	.INSULATING PLATE	1-53, 1-55, 1-57
2862740-0000	.INSULATING PLATE	1-53, 1-55, 1-57
2862741-0000	.INSULATING PLATE	1-53, 1-55, 1-57
2862742-0000	.INSULATING PLATE	1-53, 1-55, 1-57
2862743-0000	.INSULATING PLATE	1-53, 1-55, 1-57
2862744-0000	.INSULATING PLATE	1-53, 1-55, 1-57
2862745-0000	.INSULATING PLATE	1-53, 1-55, 1-57
2862746-0000	.INSULATING PLATE	1-53, 1-55, 1-57
2862748-0000	.INSULATING PLATE	1-53, 1-55, 1-57
2862749-0000	.FLAP	5-85, 5-87, 5-89
2862750-0000	.FLAP	5-83
2863118-0000	.SLIDE	1-161, 1-163
2863174-0000	.BUSBAR	1-15, 1-17
2863210-0000	.BLOCK	2-243, 2-245, 2-247
2863211-0000	.PLATE	2-243, 2-245, 2-247
2864758-0000	.NOZZLE	6-5, 6-7
2866004-0000	.PIPE	1-307
2866646-0000	.CRADLE	6-5, 6-7
2866666-0000	.COLUMN	6-11

Part No	Description	Page No
2866669-0000	.GUIDE	6-11
2866670-0000	.GUIDE	6-11
2866671-0000	.FLANGE	6-11
2866672-0000	.SUPPORT	6-11
2866683-0000	.SUPPORT	6-11
2866684-0000	.GUIDE	6-11
2866685-0000	.SHAFT	6-11
2866686-0000	.FLANGE	6-11
2866691-0000	.PLATE	6-11
2866693-0000	.SUPPORT	6-11
2866695-0000	.PLATE	6-11
2866700-0000	.BOTTOM	6-21
2866701-0000	.BOTTOM	6-21
2866703-0000	.BOTTOM	6-37
2866704-0000	.BOTTOM	6-37
2866706-0000	.BOTTOM	6-39
2866707-0000	.BOTTOM	6-39
2866740-0000	.SHAFT	4-93, 4-95, 4-97, 4-99
2866755-0000	.FILLING PIPE	1-245, 1-247, 1-249, 1-251
2867480-0000	.PIPE	1-293
2867481-0000	.PIPE	1-293
2867485-0000	.BRACKET	1-293
2867486-0000	.PIPE	1-279, 1-281
2867643-0000	.BRACKET	4-231, 4-233, 4-235, 4-237
2868043-0000	.PIPE	1-291
2868058-0000	.CABLE DUCT	9-27
2868059-0000	.CABLE DUCT	9-27
2868060-0000	.CABLE DUCT	9-27
2868062-0000	.CABLE DUCT	9-27
2868063-0000	.PLATE	9-19
2868064-0000	.PLATE	9-19
2868065-0000	.PLATE	9-19
2868066-0000	.GASKET	9-19
2868212-0000	.HOLDER	2-161, 2-163, 2-165
2868547-0000	.PIPE	5-13, 5-15
2868548-0000	.PIPE	5-13, 5-15
2868844-0000	.AXLE PIN	4-93, 4-95, 4-97, 4-99, 4-101, 4-105
2869171-0000	.ELBOW PIPE	1-309
2869172-0000	.PIPE	1-309
2869173-0000	.PIPE	1-309
2869175-0000	.PLUG	1-305
2869180-0100	.DRAIN PIPE	2-125
2869815-0000	.LID	2-93
2870090-0000	.BEARING HOUSING	8-153
2871015-0000	.DIVIDER	9-97, 9-99
2871016-0000	.DIVIDER	9-97, 9-99
2871037-0000	.PNEUMATIC DIAGRAM	2-161, 2-163, 2-165
2871045-0000	.ROCKER ARM	8-153
2871119-0000	.VOLUME FLAP	4-51, 4-53, 4-55, 4-57, 4-59, 4-65, 4-67, 4-69, 4-71, 4-73
2872063-0000	.PLATE	2-95
2872064-0000	.BRACKET	2-95
2872065-0000	.PIN	2-95
2872375-0000	.NOZZLE	1-215, 1-217
2872687-0100	.BELT TENSIONER	3-13, 3-31
2874715-0000	.STUD SCREW	1-59
2874716-0000	.BODY	1-59
2874717-0000	.KNOB	1-59
2874749-0000	.GLASS PANE	1-139
2874750-0000	.GLASS PANE	1-151, 1-153
2874751-0000	.GLASS PANE	1-9
2874752-0000	.GLASS PANE	1-7
2874755-0000	.GLASS PANE	1-201
2874761-0000	.GLASS PANE	1-419
2874762-0000	.GLASS PANE	1-421
2874763-0000	.GLASS PANE	1-419
2874952-0000	.BRACKET	2-109, 2-111, 2-113, 2-115
2875856-0000	.SUPPORTING ARM	5-279, 5-281
2876041-0000	.SCREW	2-95
2876044-0000	.GEAR WHEEL	2-95
2876334-0000	.HOLDER	5-115, 5-117, 5-119
2876477-0000	.PNEUMATIC DIAGRAM	2-161, 2-163, 2-165
2876478-0100	.POWER SUPPLY UNIT	9-35
2876480-0000	.MOUNTING PLATE	9-123, 9-125
2876481-0000	.MOUNTING PLATE	9-135, 9-137
2876482-0100	.RELAY UNIT 1	9-111, 9-113
2876484-0100	.FUSE BOARD 1	9-111, 9-113
2876486-0100	.FUSE BOARD 2	9-135, 9-137
2876488-0000	.PIPE	9-19
2876489-0100	.FUSE BOARD 3	9-135, 9-137
2876491-0100	.COMPONENT PLATES	9-103
2876492-0100	.COMPONENT PLATES	9-103
2876493-0100	.COMPONENT PLATES	9-103
2876494-0100	.COMPONENT PLATES	9-103
2876495-0000	.CABLE DUCT	9-123, 9-125

Part No	Description	Page No
2876496-0000	.CABLE DUCT	9-135, 9-137
2876664-0000	.COUNTER ROLLER	1-75, 1-77, 1-79
2877756-0000	.PROTECTION	1-387, 1-389
2878029-0000	.SPACER	6-11
2878047-0000	.GUIDE	6-43, 6-45
2878048-0000	.SHIM	6-25, 6-27, 10-15, 10-17, 10-19, 10-21, 10-23, 10-25
2878054-0000	.GUIDE	6-43, 6-45
2878055-0000	.GUIDE	6-43, 6-45
2878060-0000	.PLATE	6-43, 6-45
2878080-0000	.GUIDE	6-47, 6-49
2878095-0000	.PIN	6-25, 6-27
2878096-0000	.LEVER	6-25, 6-27
2878097-0000	.LEVER	6-25, 6-27
2878099-0000	.BUSHING	6-25, 6-27
2878100-0000	.SHAFT	6-19, 6-35
2878104-0000	.SHAFT	6-25, 6-27
2878105-0000	.SHAFT	6-25, 6-27, 6-51, 6-53
2878110-0100	.LUBRICATING SYSTEM	6-3
2878116-0000	.LEVER	6-25, 6-27, 6-51, 6-53
2878117-0000	.CLAMP	6-25, 6-27, 6-51, 6-53
2878132-0000	.GUIDE	6-43, 6-45
2878187-0000	.TEMPLATE	10-37
2878362-0100	.CONNECTION DEVICE	9-49, 9-51
2878363-0000	.FUSE PANEL LABEL	9-67
2878583-0000	.PLATE	4-249, 4-251, 4-253
2878595-0000	.LID	1-155, 1-157
2878596-0000	.LID	1-155, 1-157
2881044-0000	.DAMPER	5-181, 5-183
2881046-0000	.BUSHING	5-181, 5-183
2881047-0000	.BUSHING	5-181, 5-183
2881048-0000	.WASHER	5-181, 5-183
2881463-0000	.LOCKING DEVICE	1-245, 1-247, 1-249, 1-251
2882178-0000	.TRANSPORT EQUIPMENT	10-3
2882179-0000	.SPACER	6-11
2883280-0000	.COVER	6-5, 6-7
2885010-0000	.PLATE	9-103
2885025-0100	.RACK	9-149, 9-151
2885027-0100	.PLINTH	9-149, 9-151
2885029-0000	.ROLLER	1-71, 1-73
2885429-0000	.FILLING PIPE	1-245, 1-247, 1-249, 1-251
2886160-0000	.FUSE PANEL LABEL	9-43
2886173-0000	.LOCKING RING	1-245, 1-247, 1-249, 1-251
2886762-0000	.COVER PLATE	2-309
2886763-0000	.COVER PLATE	2-319
2887700-0000	.STOP PIN	1-245, 1-247, 1-249, 1-251
2887790-0000	.SHAFT	1-53, 1-55, 1-57
2888153-0000	.BRACKET	2-109, 2-111, 2-113, 2-115
2888477-0100	.PNEUMATIC ACCUMULATOR	8-111, 8-113
2889461-0000	.ROLLER	1-105, 1-107, 1-109
2889462-0000	.PLATE	1-105, 1-107, 1-109
2889463-0000	.LOCK PLATE	1-105, 1-107, 1-109
2889464-0000	.SHAFT	1-105, 1-107, 1-109
2889859-0000	.COVER PLATE	9-49, 9-51
2889864-0000	.DIVIDER	9-105
2889865-0000	.GASKET	9-71, 9-73
2889868-0000	.DIVIDER	9-111, 9-113
2889869-0000	.CABLE DUCT 60X80MM	9-111, 9-113
2889870-0000	.CABLE DUCT 80X80MM	9-111, 9-113
2889871-0000	.DIVIDER	9-123, 9-125
2889872-0000	.CABLE DUCT 100X80MM	9-123, 9-125
2889873-0000	.CABLE DUCT 40X80MM	9-123, 9-125
2889874-0000	.CABLE DUCT 40X80MM	9-135, 9-137
2889875-0000	.CABLE DUCT 80X80MM	9-135, 9-137
2889876-0000	.CABLE DUCT 100X80MM	9-135, 9-137
2889877-0000	.DIVIDER	9-135, 9-137
2889878-0000	.DIVIDER	9-135, 9-137
2889885-0000	.BLOCK	4-263, 4-265, 4-275, 4-277
2889886-0000	.SHAFT	6-51, 6-53
2889946-0000	.HOSE	4-263, 4-265, 4-275, 4-277
2889947-0000	.HOSE	4-263, 4-265, 4-275, 4-277
2890567-0000	.SHAFT	3-23
2890593-0000	.PIPE	1-307
2890594-0000	.PIPE	1-307
2891457-0000	.SPACER	2-309
2891551-0000	.GUIDE	2-75
2891969-0000	.ROD	1-341
2891970-0000	.KNOB	1-341
2891971-0000	.PLUG	1-341
2892472-0000	.PIPE	2-69, 2-71
2892473-0000	.PIPE	2-145, 2-147
2892573-0000	.CABLE DUCT 60X80MM	9-105
2892574-0000	.CABLE DUCT 80X80MM	9-105
2892575-0000	.MOUNTING PLATE	9-111, 9-113
2892576-0000	.MOUNTING PLATE	9-105

Part No	Description	Page No
2892577-0000	.CABLE DUCT	9-105
2892578-0000	.DIVIDER	9-135, 9-137
2892581-0000	.CABLE DUCT	9-123, 9-125
2892582-0000	.CABLE DUCT	9-123, 9-125
2892583-0000	.CABLE DUCT	9-111, 9-113
2892585-0000	.CABLE DUCT	9-77, 9-79, 9-81, 9-83, 9-85
2892586-0100	.FUSE BOARD 1	9-105
2892587-0100	.FUSE BOARD 2	9-123, 9-125
2892588-0100	.FUSE BOARD 3	9-123, 9-125
2892589-0100	.RELAY UNIT 1	9-105
2892590-0000	.CABLE DUCT	9-135, 9-137
2892591-0000	.CABLE DUCT	9-135, 9-137
2892592-0000	.DIVIDER	9-105
2892593-0000	.DIVIDER	9-111, 9-113
2892595-0000	.RAIL	9-117, 9-119
2892596-0000	.RAIL	9-115
2892597-0000	.RAIL	9-139
2892598-0000	.RAIL	9-141, 9-143
2892599-0000	.RAIL	9-107
2892600-0000	.RAIL	9-127, 9-129
2892601-0000	.RAIL	9-131
2892602-0000	.RAIL	9-109
2892732-0000	.SHAFT	2-95
2893985-0000	.SLIDE	1-161, 1-163
2894044-0000	.DRIP PLATE	3-15, 3-33
2894087-0000	.CABLE DUCT	9-97, 9-99
2894088-0000	.CABLE DUCT	9-97, 9-99
2894089-0000	.DIVIDER	9-97, 9-99
2894090-0000	.CABLE DUCT	9-77, 9-79, 9-81, 9-83, 9-85
2894091-0000	.CABLE DUCT	9-77, 9-79, 9-81, 9-83, 9-85
2894434-0000	.SPRING	1-245, 1-247, 1-249, 1-251
2894612-0000	.SHIM	1-333, 1-335
2895146-0000	.SPRING	5-213, 5-215, 5-217, 5-219, 5-221, 5-223
2895158-0000	.STEAM PIPE	1-305
2895213-0000	.BRACKET	10-5
2895457-0000	.ROLLER	1-87, 1-89, 1-91, 1-93
2895458-0000	.ROLLER	1-87, 1-89, 1-91, 1-93
2895459-0000	.ROLLER	1-87, 1-89, 1-91, 1-93
2895460-0000	.ROLLER	1-87, 1-89, 1-91, 1-93
2895461-0000	.ROLLER	1-87, 1-89, 1-91, 1-93
2895462-0000	.ROLLER	1-87, 1-89, 1-91, 1-93
2895463-0000	.ROLLER	1-87, 1-89, 1-91, 1-93
2895557-0000	.RAIL	5-259, 5-261, 5-263, 5-265, 5-267, 5-269
2895561-0000	.SPACER	5-115, 5-117, 5-119
2895564-0000	.PROTECTION	5-309, 5-311
2895702-0000	.CABLE DUCT	9-77, 9-79, 9-81, 9-83, 9-85
2895703-0000	.DIVIDER	9-77, 9-79, 9-81, 9-83, 9-85
2895704-0000	.DIVIDER	9-77, 9-79, 9-81, 9-83, 9-85
2895705-0000	.RAIL	9-77, 9-79, 9-81, 9-83, 9-85
2895718-0000	.VOLUME BULGE	6-29, 6-31
2896790-0000	.CAM	4-231, 4-233, 4-235, 4-237
2896791-0000	.CAM	4-231, 4-233, 4-235, 4-237
2897150-0000	.INSULATING PLATE	1-53, 1-55, 1-57
2897152-0000	.INDUCTOR	1-53, 1-55, 1-57
2897901-0000	.ROLLER	1-31, 1-33
2898203-0000	.VALVE CONE	1-269
2898309-0000	.ROLLER	1-31, 1-33
2898310-0000	.ROLLER	1-31, 1-33
2898459-0000	.PROTECTION	1-315
2899240-0000	.VOLUME BULGE	6-57
2899242-0000	.VOLUME BULGE	6-55
2901228-0000	.ROLLER	1-105, 1-107, 1-109
2901229-0000	.ROLLER	1-105, 1-107, 1-109
2901291-0000	.ROLLER	1-105, 1-107, 1-109
2902418-0100	.FLAP	6-19
2902419-0100	.BOTTOM	6-19
2902421-0100	.FLAP	6-35
2902422-0100	.BOTTOM	6-35
2902423-0100	.BOTTOM	6-35
2902424-0100	.GUIDE	6-43, 6-45
2902426-0000	.GUIDE	6-43, 6-45
2902438-0000	.GUIDE	6-47, 6-49
2902439-0000	.GUIDE	6-47, 6-49
2902440-0000	.GUIDE	6-47, 6-49
2902441-0000	.GUIDE	6-47, 6-49
2902446-0000	.SHAFT	6-11
2902447-0000	.SLIDER	6-11
2902448-0000	.PIN	6-11
2902454-0000	.CLAMP	6-43, 6-45
2902463-0000	.LEVER	6-25, 6-27, 6-51, 6-53
2902464-0000	.SHAFT	6-51, 6-53
2902465-0000	.SHAFT	6-51, 6-53
2902466-0000	.SHAFT	6-25, 6-27
2902467-0000	.SHAFT	6-25, 6-27

Part No	Description	Page No
2902472-0000	.WASHER	6-25, 6-27, 6-51, 6-53
2902473-0000	.FLANGE	6-43, 6-45
2902474-0000	.SHAFT	6-43, 6-45
2902477-0000	.LUBRICATION DIAGRAM	2-327
2902479-0000	.GEAR WHEEL	6-43, 6-45
2902483-0000	.PLATE	6-11
2902484-0000	.PLATE	6-11
2902485-0000	.SUPPORT	6-11
2902489-0000	.TOOL	6-75
2902490-0100	.TOOL	6-59
2902491-0000	.PLATE	6-75
2902501-0000	.SUPPORT	6-59
2905297-0000	.ANGLE	2-75
2905298-0000	.ANGLE	2-75
2905299-0000	.ANGLE	2-75
2905300-0000	.PLATE	2-75
2905400-0000	.SUPPORT	8-87, 8-89
2905401-0000	.BRACKET	8-41, 8-43
2905402-0000	.COVER	8-65, 8-67
2905403-0000	.CABLE DUCT	8-65, 8-67
2905404-0000	.COVER	8-69, 8-71
2905405-0000	.CABLE DUCT	8-69, 8-71
2905406-0000	.SUPPORT	8-77, 8-79, 8-81
2905407-0000	.TEMPLATE	8-91, 8-93
2905408-0100	.UPPER BENDING ROLLER	8-35, 8-37, 8-39
2905409-0000	.HOLDER	8-49
2905410-0000	.HOLDER	8-49
2905411-0100	.COVER	8-35, 8-37, 8-39
2905412-0000	.COVER PLATE	8-47
2907814-0000	.BRACKET	2-75
2907974-0000	.FRAME	1-105, 1-107, 1-109
2907975-0000	.BRACKET	1-105, 1-107, 1-109
2908914-0000	.SPACER	5-181, 5-183
2909185-0000	.VOLUME BULGE	4-93, 4-95, 4-97, 4-99
2909504-0000	.BUSHING	3-23
2909505-0000	.ROCKER	3-23
2909850-0000	.SPACER SCREW	4-93, 4-95, 4-97, 4-99
2909851-0000	.VOLUME BULGE	4-101, 4-105, 4-107, 4-111
2909852-0000	.SHIM	4-101, 4-105, 4-107, 4-111, 10-15, 10-17, 10-19, 10-21, 10-23, 10-25
2909853-0000	.SHIM	4-93, 4-95, 4-97, 4-99, 10-15, 10-17, 10-19, 10-21, 10-23, 10-25
2912159-0000	.RAIL	5-259, 5-261, 5-263, 5-265, 5-267, 5-269
2912160-0000	.RAIL	5-259, 5-261, 5-263, 5-265, 5-267, 5-269
2912161-0000	.RAIL	5-259, 5-261, 5-263, 5-265, 5-267, 5-269
2912162-0000	.BRACKET	5-259, 5-261, 5-263, 5-265, 5-267, 5-269
2912330-0000	.ROLLER	8-153
2912331-0000	.SHAFT	8-153
2912332-0000	.DRIP PLATE	3-15, 3-33
2913271-0000	.RAIL	8-171, 8-173
2913272-0000	.RAIL	8-171, 8-173
2914242-0000	.SHAFT	8-243
2914569-0000	.INSERT	2-189, 2-191
2914990-0000	.BRACKET	5-259, 5-261, 5-263, 5-265, 5-267, 5-269
2914991-0000	.BRACKET	5-259, 5-261, 5-263, 5-265, 5-267, 5-269
2914992-0000	.CARRIER	5-289, 5-291, 5-293
2914993-0000	.RAIL	5-259, 5-261, 5-263, 5-265, 5-267, 5-269
2914994-0000	.RAIL	5-259, 5-261, 5-263, 5-265, 5-267, 5-269
2916653-0000	.ROLLER	8-243
2916859-0000	.ECCENTRIC BUSHING	8-153, 8-243
2917412-0001	.FLAP HOLDER	4-95
2917412-0002	.FLAP HOLDER	4-97
2917412-0003	.FLAP HOLDER	4-99
2917412-0004	.FLAP HOLDER	4-93
2917413-0000	.FRAME	4-93, 4-95, 4-97, 4-99
2917414-0000	.FLAP	4-97, 4-99
2917415-0000	.FLAP	4-97, 4-99
2917416-0000	.FLAP	4-93, 4-95
2917417-0000	.FLAP	4-93, 4-95
2917418-0000	.PIN	4-93, 4-95, 4-97, 4-99
2917419-0000	.PIN	4-93, 4-95, 4-97, 4-99
2918305-0000	.NOZZLE	6-43, 6-45
2918611-0000	.WORM SHAFT	2-95
2918612-0000	.SCREW	2-95
2919169-0000	.PIN	8-243
2920984-0100	.CONNECTION BOX	2-319
2920985-0100	.CONNECTION BOX	2-309
2921006-0100	.FAN SYSTEM	2-317
2921007-0100	.FAN SYSTEM	2-307
2921008-0000	.PIPE	2-145, 2-147
2921156-0000	.NOZZLE	6-43, 6-45
2921201-0000	.JOINT	2-95
2921567-0000	.SCREW	6-33, 6-59
2921576-0000	.AIR DISTRIBUTION BOX	1-143, 1-145
2921577-0000	.AIR NOZZLE	1-143, 1-145
2921579-0000	.HOOK	1-143, 1-145

Part No	Description	Page No
2921581-0000	.CAP NUT	1-143, 1-145
2921582-0000	.SHAFT	1-171, 1-173
2921583-0000	.FLANGE	1-171, 1-173
2921584-0000	.FLANGE	1-171, 1-173
2922489-0000	.PIN	4-93, 4-95, 4-97, 4-99
2922524-0000	.SCREW	4-93, 4-95, 4-97, 4-99
2922536-0000	.SPRING	4-93, 4-95, 4-97, 4-99, 4-103, 4-109, 4-113
2922537-0000	.SPRING	4-93, 4-95, 4-97, 4-99, 4-103, 4-109, 4-113
2922539-0100	.VOLUME FLAP PRESSURE RIGHT	4-5
2922540-0100	.VOLUME FLAP CUTTING RIGHT	4-5
2925912-0000	.TOOL	11-39
2926120-0000	.RAIL	5-259, 5-261, 5-263, 5-265, 5-267, 5-269
2926122-0000	.BRACKET	5-259, 5-261, 5-263, 5-265, 5-267, 5-269
2926123-0000	.BRACKET	5-259, 5-261, 5-263, 5-265, 5-267, 5-269
2926124-0000	.BRACKET	5-259, 5-261, 5-263, 5-265, 5-267, 5-269
2926822-0000	.PULLEY	6-33, 6-59
2926826-0000	.DRIVE PULLEY	6-13, 6-33
2926834-0000	.PULLEY	6-33
2926836-0000	.BELT	6-33
2926839-0000	.TOOTHED PULLEY	6-11
2926840-0000	.TOOTHED PULLEY	6-11
2926843-0000	.TOOTHED PULLEY	6-11
2926844-0000	.TOOTHED PULLEY	6-11
2926846-0000	.BELT	6-59
2926852-0000	.BELT	6-11
2926853-0000	.BELT	6-11
2926854-0000	.TIMING BELT	6-11
2926861-0000	.COVER	6-33
2926862-0000	.COVER	6-33
2926863-0000	.COVER	6-59
2926868-0000	.SCREW	6-25, 6-27
2926870-0000	.PIPE	6-33, 6-59
2926871-0000	.COVER	6-25, 6-27
2926875-0000	.PLATE	6-33, 6-59
2926876-0000	.PLATE	6-33
2926877-0000	.PLATE	6-59
2926878-0000	.SUPPORT	6-51, 6-53
2926880-0000	.SUPPORT	6-25, 6-27
2927281-0000	.SLEEVE	4-231, 4-233, 4-235, 4-237
2927686-0000	.BRACKET	2-69, 2-71
2927707-0000	.PIPE	5-17, 5-19
2928230-0100	.VOLUME FLAP CUTTING LEFT	4-5
2928231-0100	.VOLUME FLAP PRESSURE LEFT	4-5
2928232-0100	.VOLUME FLAP CUTTING LEFT	4-5
2928233-0100	.VOLUME FLAP PRESSURE LEFT	4-5
2928234-0002	.HOLDER	4-109
2928234-0003	.HOLDER	4-113
2928234-0004	.HOLDER	4-103
2928236-0100	.SHOCK ABSORBER	4-107
2928237-0100	.SHOCK ABSORBER	4-111
2928238-0100	.SHOCK ABSORBER	4-101, 4-105
2928239-0000	.HOLDER	4-93, 4-95, 4-97, 4-99, 4-101, 4-105, 4-107, 4-111
2930001-0003	.TPOP CD	9-13
2931192-0000	.IMPELLER WHEEL	2-31
2931909-0000	.CLAMPING PIECE	1-171, 1-173
2931911-0000	.BEARING COVER	1-171, 1-173, 1-175, 1-177
2931912-0000	.BEARING SEAT	1-185, 1-187, 1-189
2931913-0000	.BENDING ROLLER	1-185, 1-187, 1-189
2931914-0000	.BEARING COVER	1-185, 1-187, 1-189
2931917-0000	.BEARING SEAT	1-181, 1-183
2931920-0001	.SHIM	8-25
2931920-0002	.SHIM	8-25
2932050-0000	.PROTECTION	2-65
2934366-0000	.BRACKET	1-13
2934367-0000	.BRACKET	1-13
2934368-0000	.PROTECTION	1-13
2936481-0000	.ARM	1-175, 1-177
2936482-0000	.ARM	1-175, 1-177
2937284-0100	.DRAINING CONDENSE	1-5
2939863-0000	.CLAMP	1-285
2940246-0000	.SHAFT	1-321, 1-323
2940247-0000	.FLANGE	1-321, 1-323
2940248-0000	.FLANGE	1-321, 1-323
2940465-0000	.SPACER	5-181, 5-183
2940466-0000	.SPACER	5-181, 5-183
2940467-0000	.BRACKET	5-181, 5-183
2940468-0000	.BRACKET	5-181, 5-183
2940946-0000	.BRACKET	1-53, 1-55, 1-57
2941043-0000	.COLUMN	6-33
2944623-0000	.COVER	3-27
2944624-0000	.COVER	3-27
2944625-0000	.COVER	3-27
2944626-0000	.COVER	3-27
2944627-0000	.COVER	3-27

Part No	Description	Page No
2945036-0000	.FLANGE	1-191
2945037-0000	.FLANGE	1-191
2945064-0000	.FINGER	5-259, 5-261, 5-263, 5-265, 5-267, 5-269, 10-15, 10-17, 10-19, 10-21, 10-23, 10-25
2945065-0000	.RAIL	5-259, 5-261, 5-263, 5-265, 5-267, 5-269
2945372-0000	.COVER	3-27
2945379-0100	.COVER	3-5
2945499-0100	.OPTIONAL ACCESSORIES SPEC FOR TP NIHON	11-3
2945996-0000	.PLUG	6-13
2946883-0000	.SPACER	1-87, 1-89, 1-91, 1-93
2951055-0000	.ANGLE HOLDER	1-143, 1-145
2951057-0000	.FLANGE	1-181, 1-183
2951058-0000	.LID	1-181, 1-183
2951059-0000	.RUBBER ROLLER	1-181, 1-183
2951062-0000	.SUPPORT FLANGE	1-181, 1-183
2951097-0000	.COLUMN	6-33
2951104-0000	.SPACER	6-33, 6-59
2951166-0000	.SUPPORT	9-19
2951496-0000	.PLATE	1-161, 1-163
2951497-0000	.ROLLER	1-155, 1-157
2951498-0000	.ROLLER	1-135, 1-137
2951499-0000	.SQUEE-GEE ROLLER	1-171, 1-173, 1-175, 1-177
2951500-0000	.PLATE	1-193, 1-195
2951501-0000	.ROLLER	1-341
2951504-0000	.PLATE	1-193, 1-195
2952684-0000	.TOOTHED PULLEY	5-307
2952685-0000	.TOOTHED PULLEY	5-307
2952687-0000	.TOOTHED PULLEY	5-313, 5-315
2952688-0000	.TOOTHED PULLEY	5-313, 5-315
2952928-0000	.PEROXIDE CHAMBER	1-321, 1-323
2953241-0000	.LOCK PLATE	1-31, 1-33
2953242-0000	.LOCK PLATE	1-31, 1-33
2954299-0000	.ROLLER	1-39, 1-41
2954300-0000	.ROLLER	1-39, 1-41
2954804-0000	.SPACER	1-39, 1-41
2954988-0000	.BRACKET	1-143, 1-145
2954989-0000	.BRACKET	1-143, 1-145
2954990-0000	.PIPE	1-143, 1-145
2954991-0000	.PIPE	1-143, 1-145
2955104-0000	.PLUG	5-307, 5-313, 5-315
2955762-0000	.LOCK HANDLE	6-11
2955763-0000	.BEARING HOUSING	5-313, 5-315
2957794-0000	.INSERT	2-99, 2-101
2957900-0000	.GASKET	1-61, 1-63, 1-65, 1-67, 1-69
2958180-0000	.CRADLE	5-301, 5-303
2958240-0000	.ROLLER	5-285, 5-307, 5-313, 5-315
2958241-0000	.SHAFT	5-307, 5-313, 5-315
2958720-0000	.BOTTOM	5-29, 5-31
2958800-0000	.BUSHING	8-143
2958990-0000	.PLATE	1-61, 1-63, 1-65, 1-67, 1-69
2958991-0000	.PLATE	1-61, 1-63, 1-65, 1-67, 1-69
2958992-0000	.SEAL	1-61, 1-63, 1-65, 1-67, 1-69
2959220-0000	.PLATE	5-253, 5-255
2959221-0000	.SUPPORT	5-253, 5-255
2959222-0000	.PLATE	5-253, 5-255
2959223-0000	.PLATE	5-253, 5-255
2959397-0002	.ROLLER	4-243, 4-245
2959665-0000	.HOLDER	2-243, 2-245, 2-247
2959680-0000	.DRAIN PLATE	2-243, 2-245, 2-247
2959681-0000	.SPRING	1-245, 1-247, 1-249, 1-251
2959682-0000	.HOOD	1-245, 1-247, 1-249, 1-251
2960214-0000	.AXLE SUPPORT	1-61, 1-63, 1-65, 1-67, 1-69
2960215-0000	.AXLE SUPPORT	1-61, 1-63, 1-65, 1-67, 1-69
2960448-0000	.LOWER FILLING TUBE	1-245, 1-247, 1-249, 1-251
2960455-0000	.CLEANING CUP	1-297, 1-299
2960579-0000	.FILLING PIPE	1-245, 1-247, 1-249, 1-251
2961507-0000	.ROLLER	1-31, 1-33
2961508-0000	.ROLLER	1-31, 1-33
2961956-0000	.LINK	4-285
2961981-0000	.HANDLE	6-75
2963360-0000	.ROLLER	5-169, 5-171
2963361-0000	.SHAFT	5-169, 5-171
2963362-0000	.BRACKET	5-259, 5-261, 5-263, 5-265, 5-267, 5-269
2963364-0000	.BRACKET	5-259, 5-261, 5-263, 5-265, 5-267, 5-269
2963366-0000	.BRACKET	5-259, 5-261, 5-263, 5-265, 5-267, 5-269
2963367-0100	.END UNIT	5-247, 5-249, 5-251
2966480-0000	.BRACKET	1-283
2966771-0000	.PROTECTION	1-315
2966902-0000	.NUT	5-181, 5-183
2968251-0000	.MACHINE SIGN	11-67
2968252-0000	.PLATE	1-117, 1-119
2968257-0000	.ROLLER	1-31, 1-33
2968260-0000	.LEVEL PROBE	2-107
2969109-0000	.SUPPORT RING	1-47, 1-49
2969110-0000	.ROLLER	1-47, 1-49

Part No	Description	Page No
2969719-0000	.RAIL	4-129, 4-131, 4-133
2969720-0000	.RAIL	4-187, 4-189, 4-191
2969721-0000	.VOLUME BULGE	4-129, 4-131, 4-133, 4-187, 4-189, 4-191
2970916-0000	.PLATE	8-243
2974487-0000	.ROLLER	1-47, 1-49
2976352-0000	.BRACKET	1-53, 1-55, 1-57
2976353-0000	.BRACKET	1-53, 1-55, 1-57
2977498-0000	.CLEANING CUP	1-297, 1-299
2977509-0000	.ROLLER	1-39, 1-41
2977510-0000	.ROLLER	1-39, 1-41
2977511-0000	.ROLLER	1-39, 1-41
2977907-0000	.ROLLER	1-39, 1-41
2977909-0000	.ROLLER	1-39, 1-41
2978351-0000	.ROLLER	1-39, 1-41
2978582-0000	.INDUCTOR	4-129, 4-131, 4-133
2978583-0000	.INDUCTOR	4-187, 4-189, 4-191
2978594-0000	.SUPPORT RING	1-31, 1-33
2978813-0000	.ANGLE	2-75
2981828-0000	.BUSHING	4-261, 4-273
2982570-0000	.PNEUMATIC DIAGRAM	8-237, 8-239
2982646-0000	.SPACER	1-39, 1-41
2982665-0000	.VOLUME FLAP	4-7, 4-9, 4-11, 4-17, 4-19, 4-21
2982668-0000	.VOLUME FLAP	4-7, 4-9, 4-11, 4-17, 4-19, 4-21
2982739-0000	.RETAINING RING	4-295, 4-297
2982991-0000	.SUPPORT RING	1-47, 1-49
2982992-0000	.ROLLER	1-47, 1-49
2982993-0000	.ROLLER	1-47, 1-49
2982994-0000	.ROLLER	1-47, 1-49
2982995-0000	.ROLLER	1-47, 1-49
2983172-0000	.SLEEVE	4-285
2983173-0000	.SHAFT	4-287
2985891-0100	.PROTECTION	2-63
2985896-0100	.DRIVE SYSTEM	4-301
2986076-0000	.TEMPLATE	10-37
2986657-0100	.CONTROL UNIT	4-301
2986658-0100	.CENTERING UNIT	4-301
2986689-0000	.AIR NOZZLE	1-143, 1-145
2987075-0100	.COVER	1-203, 1-205
2993128-0000	.COVER	1-237, 1-239
2993129-0000	.COVER	1-237, 1-239
2993130-0000	.COVER	1-237, 1-239
2993134-0000	.AXLE PIN	4-7, 4-9, 4-11, 4-17, 4-19, 4-21, 4-83, 4-85, 4-89, 4-91
2993135-0000	.ROLLER	4-7, 4-9, 4-11, 4-17, 4-19, 4-21, 4-51, 4-53, 4-55, 4-57, 4-59, 4-65, 4-67, 4-69, 4-71, 4-73, 4-83, 4-85, 4-89, 4-91
2993136-0000	.ROLLER	4-7, 4-9, 4-11, 4-17, 4-19, 4-21
2993777-0000	.COVER	1-237, 1-239
2993778-0000	.COVER	1-237, 1-239
2994370-0000	.CLAMP	1-237, 1-239
2994371-0000	.CLAMP	1-237, 1-239
2994372-0000	.CLAMP	1-237, 1-239
2994373-0000	.CLAMP	1-237, 1-239
2996051-0000	.BRACKET	5-323, 5-325
2997144-0000	.COVER	1-237, 1-239
2998831-0000	.COVER	1-285
2999045-0000	.BUSHING	1-191
3000365-0000	.DOOR	7-65, 7-67
3004968-0000	.FLANGE	1-245, 1-247, 1-249, 1-251
3004969-0000	.PIPE	1-245, 1-247, 1-249, 1-251
3005136-0000	.COVER	1-279, 1-281
3006266-0000	.FLANGE	1-171, 1-173
3006267-0000	.FLANGE	1-171, 1-173
3006268-0000	.FLANGE	1-171, 1-173
3006269-0000	.FLANGE	1-171, 1-173
3006270-0100	.DRIVE ROLLER	1-131, 1-133
3006271-0000	.DRIVE ROLLER	1-181, 1-183
3006272-0000	.DRIVE ROLLER	1-181, 1-183
3008102-0000	.ROLLER	1-61, 1-63, 1-65, 1-67, 1-69
3008105-0000	.BENDING ROLLER	1-185, 1-187, 1-189
3008106-0000	.BEARING SEAT	1-185, 1-187, 1-189
3008107-0000	.LID	1-185, 1-187, 1-189
3008108-0000	.BENDING ROLLER	1-185, 1-187, 1-189
3010129-0000	.SUPPORT	8-123
3013416-0000	.ROLLER	1-61, 1-63, 1-65, 1-67, 1-69
3013417-0000	.ROLLER	1-61, 1-63, 1-65, 1-67, 1-69
3015597-0000	.ROLLER	1-61, 1-63, 1-65, 1-67, 1-69
3016566-0000	.ROLLER	1-31, 1-33
3016707-0000	.ROLLER	1-31, 1-33
3016908-0000	.ROLLER	1-31, 1-33
3016910-0000	.COUNTER ROLLER	1-31, 1-33
3017747-0000	.GUIDE	4-259
3018414-0000	.PLATE	1-117, 1-119
3018842-0001	.TPIH CD	9-17
3019307-0000	.ROLLER	1-39, 1-41
3019308-0000	.ROLLER	1-39, 1-41

Tetra Pak

SPC
Spare Parts Catalogue

Pos	Part No	Description	Page No
A			
P1ASU3	90166-0195	TUBE 12 MM PA BLUE	2-257
P1ASU1	90166-0195	TUBE 12 MM PA BLUE	2-257
P1ASU2	90166-0195	TUBE 12 MM PA BLUE	2-257
P1ASU3	90166-0195	TUBE 12 MM PA BLUE	2-259
P1ASU1	90166-0195	TUBE 12 MM PA BLUE	2-259
P1ASU2	90166-0195	TUBE 12 MM PA BLUE	2-259
P.A854	90459-3957	TPOP QPICBDEOOOO	11-85
AS010	1484695-0000	KNIFE	10-9
AS010	2564232-0100	LEG	11-5
AS020	2592780-0000	DOLLY	10-9
A101	90459-4233	DEVICENET MASTER MODULE	9-97, 9-99
A102	90031-0062	PLC, ANALOG OUTPUT MODULE 8PT/CURR/VOLT	9-97, 9-99
A103	90031-0062	PLC, ANALOG OUTPUT MODULE 8PT/CURR/VOLT	9-97, 9-99
A104	90031-0061	PLC,ANALOG INPUT MODULE 16 PT/CURRENT	9-97, 9-99
A105	90031-0060	PLC,ANALOG INPUT MODULE 16 PT/VOLTAGE	9-97, 9-99
A106	90031-0065	PLC,TEMPERATUR CONTROL,INPUT MODULE 8 PT	9-97, 9-99
A107	90031-0065	PLC,TEMPERATUR CONTROL,INPUT MODULE 8 PT	9-97, 9-99
A108	90031-0065	PLC,TEMPERATUR CONTROL,INPUT MODULE 8 PT	9-97, 9-99
A109	90031-0058	PLC, DIGITAL INPUT MODULE	9-97, 9-99
A110	90031-0057	PLC, DIGITAL INPUT MODULE	9-97, 9-99
A111	90031-0057	PLC, DIGITAL INPUT MODULE	9-97, 9-99
A114	90031-0057	PLC, DIGITAL INPUT MODULE	9-97, 9-99
A115	90031-0057	PLC, DIGITAL INPUT MODULE	9-97, 9-99
A116	90031-0057	PLC, DIGITAL INPUT MODULE	9-97, 9-99
A117	90031-0057	PLC, DIGITAL INPUT MODULE	9-97, 9-99
A118	90031-0057	PLC, DIGITAL INPUT MODULE	9-97, 9-99
A119	90031-0057	PLC, DIGITAL INPUT MODULE	9-97, 9-99
A120	90031-0057	PLC, DIGITAL INPUT MODULE	9-97, 9-99
A121	90031-0057	PLC, DIGITAL INPUT MODULE	9-97, 9-99
A122	90031-0057	PLC, DIGITAL INPUT MODULE	9-97, 9-99
A123	90031-0057	PLC, DIGITAL INPUT MODULE	9-97, 9-99
A124	90031-0057	PLC, DIGITAL INPUT MODULE	9-97, 9-99
A125	90031-0057	PLC, DIGITAL INPUT MODULE	9-97, 9-99
A126	90031-0057	PLC, DIGITAL INPUT MODULE	9-97, 9-99
A127	90031-0057	PLC, DIGITAL INPUT MODULE	9-97, 9-99
A128	90031-0057	PLC, DIGITAL INPUT MODULE	9-97, 9-99
A129	90031-0057	PLC, DIGITAL INPUT MODULE	9-97, 9-99
A130	90031-0059	PLC, DIGITAL OUTPUT MODULE	9-97, 9-99
A131	90031-0059	PLC, DIGITAL OUTPUT MODULE	9-97, 9-99
A132	90031-0059	PLC, DIGITAL OUTPUT MODULE	9-97, 9-99
A133	90031-0059	PLC, DIGITAL OUTPUT MODULE	9-97, 9-99
A134	90031-0059	PLC, DIGITAL OUTPUT MODULE	9-97, 9-99
A136	90031-0059	PLC, DIGITAL OUTPUT MODULE	9-97, 9-99
A137	90031-0059	PLC, DIGITAL OUTPUT MODULE	9-97, 9-99
A138	90031-0059	PLC, DIGITAL OUTPUT MODULE	9-97, 9-99
A139	90031-0059	PLC, DIGITAL OUTPUT MODULE	9-97, 9-99
A140	90031-0059	PLC, DIGITAL OUTPUT MODULE	9-97, 9-99
A141	90031-0059	PLC, DIGITAL OUTPUT MODULE	9-97, 9-99
A142	90031-0059	PLC, DIGITAL OUTPUT MODULE	9-97, 9-99
A143	90031-0059	PLC, DIGITAL OUTPUT MODULE	9-97, 9-99
A144	90031-0059	PLC, DIGITAL OUTPUT MODULE	9-97, 9-99
A145	90031-0059	PLC, DIGITAL OUTPUT MODULE	9-97, 9-99
A146	90031-0059	PLC, DIGITAL OUTPUT MODULE	9-97, 9-99
A147	90031-0059	PLC, DIGITAL OUTPUT MODULE	9-97, 9-99
A149	90031-0059	PLC, DIGITAL OUTPUT MODULE	9-97, 9-99
A160	90031-0051	BASEPLATE, 10-SLOT	9-97, 9-99
A161	90031-0053	BASEPLATE,10-SLOT	9-97, 9-99
A162	90031-0053	BASEPLATE,10-SLOT	9-97, 9-99
A163	90031-0053	BASEPLATE,10-SLOT	9-97, 9-99
A164	90031-0053	BASEPLATE,10-SLOT	9-97, 9-99
A300	90458-2580	LEVEL CONTROL RELAY, RM4-LA32M	9-77, 9-79, 9-81, 9-83, 9-85
A301	90458-2580	LEVEL CONTROL RELAY, RM4-LA32M	9-77, 9-79, 9-81, 9-83, 9-85
A302	90458-2580	LEVEL CONTROL RELAY, RM4-LA32M	9-77, 9-79, 9-81, 9-83, 9-85
A303	90458-2580	LEVEL CONTROL RELAY, RM4-LA32M	9-77, 9-79, 9-81, 9-83, 9-85
A304	90458-2580	LEVEL CONTROL RELAY, RM4-LA32M	9-77, 9-79, 9-81, 9-83, 9-85
A308	90458-2580	LEVEL CONTROL RELAY, RM4-LA32M	9-77, 9-79, 9-81, 9-83, 9-85
A400	68262-0101	BACKPLANE FRONT RACK 8TE	9-157
A401	68262-0101	BACKPLANE FRONT RACK 8TE	9-157
A402	68262-0101	BACKPLANE FRONT RACK 8TE	9-157
A403	68262-0101	BACKPLANE FRONT RACK 8TE	9-157
A404	559810-0101	TMCC2 CONTROLLER	9-23
A414	90459-5187	CONDUCTIVITY TRANSMITTER CLM223-ID7105	9-149, 9-151
A418	559810-0101	TMCC2 CONTROLLER	9-161
A418.1	68262-0101	BACKPLANE FRONT RACK 8TE	9-161
A419	559810-0101	TMCC2 CONTROLLER	9-161
A419.1	68262-0101	BACKPLANE FRONT RACK 8TE	9-161
A420	90459-0183	TRANSMITTER , TRANS T02 PCP	9-149, 9-151
A420	559810-0101	TMCC2 CONTROLLER	9-161
A420.1	68262-0101	BACKPLANE FRONT RACK 8TE	9-161
A421	559810-0101	TMCC2 CONTROLLER	9-161
A421.1	68262-0101	BACKPLANE FRONT RACK 8TE	9-161
A422	559810-0101	TMCC2 CONTROLLER	9-161

Pos	Part No	Description	Page No
A			
A422.1	68262-0101	BACKPLANE FRONT RACK 8TE	9-161
A450	90453-0002	MODEM MD-12 DC	9-149, 9-151
A451	2518145-0101	FLEXBOX TETRA BRIK	9-149, 9-151
A452	90459-6858	ETHERNET SW, FL SWITCH SF 8TX FROM V 14	9-149, 9-151
A452	90600-1847	ETHERNET SWITCH, FL SWITCH SFN 5TX	9-149, 9-151
A500	1499642-0201	TPIH GENERATOR	9-87
A501	1499642-0201	TPIH GENERATOR	9-87
A502	1499642-0201	TPIH GENERATOR	9-87
A600	90119-0072	SAFETY RELAY, JSBR4	9-77, 9-79, 9-81, 9-83, 9-85
A601	90600-1454	SAFETY TIME RELAY, E1T-1.0S-24VDC	9-77, 9-79, 9-81, 9-83, 9-85
A602	90119-0072	SAFETY RELAY, JSBR4	9-77, 9-79, 9-81, 9-83, 9-85
A604	90457-0092	SAFETY RELAY RT9-24VDC	9-77, 9-79, 9-81, 9-83, 9-85
A605	90457-0092	SAFETY RELAY RT9-24VDC	9-77, 9-79, 9-81, 9-83, 9-85
A606	90119-0089	SAFETY RELAY, JSBT4 24VDC	9-77, 9-79, 9-81, 9-83, 9-85
A607	90457-0092	SAFETY RELAY RT9-24VDC	9-77, 9-79, 9-81, 9-83, 9-85
A700	90600-5212	AXIS MOD. W. PS,2094-BC02-M02-S SERIES B	9-37
A701	90600-5216	AXIS MOD. KINETIX 6000,2094-BM02-S SER.B	9-37
A702	90600-5216	AXIS MOD. KINETIX 6000,2094-BM02-S SER.B	9-37
A703	90600-5216	AXIS MOD. KINETIX 6000,2094-BM02-S SER.B	9-37
A704	90600-5212	AXIS MOD. W. PS,2094-BC02-M02-S SERIES B	9-39
A705	90600-5216	AXIS MOD. KINETIX 6000,2094-BM02-S SER.B	9-39
A706	90600-5216	AXIS MOD. KINETIX 6000,2094-BM02-S SER.B	9-39
A707	90459-2547	POWER RAIL SLOT FILLER MODULE, 2094-PRF	9-39
A710	90600-5216	AXIS MOD. KINETIX 6000,2094-BM02-S SER.B	9-89, 9-91
A711	90459-7216	AXIS MODULE 650V, 21,2A, 2094-BM03-S	9-89, 9-91
A712	90459-7212	AXIS MODULE WITH INT. PS, 2094-BC04-M03-	9-89, 9-91
A713	90600-5216	AXIS MOD. KINETIX 6000,2094-BM02-S SER.B	9-89, 9-91
A714	90600-5214	AXIS MOD. KINETIX 6000,2094-BM01-S SER.B	9-89, 9-91
A715	90600-5214	AXIS MOD. KINETIX 6000,2094-BM01-S SER.B	9-89, 9-91
A716	90600-5212	AXIS MOD. W. PS,2094-BC02-M02-S SERIES B	9-89, 9-91
A726	90458-0522	STEP MOTOR DRIVE L25	9-27
A728	90458-1300	2 AXIS DOCKING STATION D2/PLC	9-27
A900	90459-2421	BASEPLATE, 7 SLOT CONTROLLOGIX CHASSIS	9-93
A901	90459-2477	ETHERNET I/P BRIDGE MODULE, 1756-ENBT	9-93
A902	90459-2481	PLC 16-AXIS SERCOS MOTION MODULE	9-93
A903	90600-5840	PLC DEVICEN. BR./SCAN MOD, 1756-DNB, D	9-93
A904	90459-6556	PLC DIGITAL INPUT 32PTS, 1756-IB32/B	9-93
A905	90459-2474	PLC,DIGIT. OUTPUT MODULE 16 PTS 10-31VDC	9-93
A7901	68699-0101	MULTIPLEXER CARD 56LED	8-285
B			
B001	90326-0053	THERMOCOUPLE, 12826-35	9-49, 9-51
B002	90044-0192	LIMIT SW. SZ2586.000	9-49, 9-51
B003	90044-0192	LIMIT SW. SZ2586.000	9-49, 9-51
B004	90044-0192	LIMIT SW. SZ2586.000	9-49, 9-51
B005	90044-0192	LIMIT SW. SZ2586.000	9-49, 9-51
B720	90458-1114	BIMET. ELECTROMECH. THERMOSTAT K7H.020	9-25
B760	90044-0192	LIMIT SW. SZ2586.000	9-19
B770	90044-0192	LIMIT SW. SZ2586.000	9-19
B1040	90600-0463	INDUCTIVE SWITCH,E2A-M12LN05-WP-B1-TP 5M	1-341
B1101	90459-0711	FLOW SENSOR FS-400 SERIES / 26440	1-235
B1102	90600-2960	AIR FLOW SENSOR 0-30 M/S VENT-CAPTOR	1-235
B1103	90459-4810	PRESS TRANSD (DIFF) 0 - 2000PA, 2681-20C	1-387, 1-389
B1104	979500-0003	ELECTRODE	1-225
B1106	90326-0057	THERMOCOUPLE, CR-AL	1-221
B1109	90458-0341	THERMOCOUPLE, 5130050-001	1-15, 1-17
B1111	90457-0047	SENSOR 2750-1-5111-1 W.ADAPTER PNP	1-231
B1209	90326-0057	THERMOCOUPLE, CR-AL	1-315
B1210	90459-0951	TRANSDUCER, BTL7-A110-M0400-B-S32	2-17, 2-19
B1235	90459-0689	PRESSURE TRANSMITTER 0 - 0,6 BAR	1-143, 1-145
B1240	90458-2775	PROX.SENSOR SMT-8-PS-K5-LED-24-B	1-19
B1241	90459-0829	PROX.SENSOR SMTO-4U-PS-K-LED-24	1-223
B1242	90459-0829	PROX.SENSOR SMTO-4U-PS-K-LED-24	1-223
B1243	90459-0829	PROX.SENSOR SMTO-4U-PS-K-LED-24	1-223
B1244	90459-0829	PROX.SENSOR SMTO-4U-PS-K-LED-24	1-223
B1301	90044-0194	INDUCTIVE SENSOR IN5329	1-265
B1302	90044-0194	INDUCTIVE SENSOR IN5329	1-265
B1303	90044-0194	INDUCTIVE SENSOR IN5329	1-265
B1305	90458-0256	PROX.SWITCH IIA 3010-BPKG/6M	2-63
B1306	90600-0467	INDUCTIVE SWITCH,E2A-M18KS05-WP-B1-TP 6M	1-311
B1307	90600-0467	INDUCTIVE SWITCH,E2A-M18KS05-WP-B1-TP 6M	1-311
B1315	90600-3924	CONDUCTIVITY SENSOR CLS 54-ACS1022	1-309
B1316	90458-0806	FLOW METER, NO. XF DF23-DN32	1-279, 1-281
B1321	90600-0473	INDUCTIVE SWITCH E2A-S08KS01-WP-B1-TP 5M	1-287
B1322	1478814-0000	SENSOR	1-287
B1403	90044-0194	INDUCTIVE SENSOR IN5329	1-345, 1-347
B1405	90044-0194	INDUCTIVE SENSOR IN5329	1-193, 1-195
B1420	90459-0181	PIPE SURFACE THERM., PT-100 -50° -+120°C	1-279, 1-281
B1502	90044-0194	INDUCTIVE SENSOR IN5329	1-175, 1-177
B1503	90326-0057	THERMOCOUPLE, CR-AL	1-221
B1504	90459-0472	KEY SAF.SW. AZ 16 02ZVRK-M20-2152-2254	1-139, 1-153
B1505	90459-0472	KEY SAF.SW. AZ 16 02ZVRK-M20-2152-2254	1-9
B1506	90459-0472	KEY SAF.SW. AZ 16 02ZVRK-M20-2152-2254	1-7

Pos	Part No	Description	Page No
B			
B1508	90459-0472	KEY SAF.SW. AZ 16 02ZVRK-M20-2152-2254	1-201
B1509	90459-0472	KEY SAF.SW. AZ 16 02ZVRK-M20-2152-2254	1-151
B1511	90459-3682	ROTARY POSITION SENSOR RPN1A111	1-199
B1803	90600-0473	INDUCTIVE SWITCH E2A-S08KS01-WP-B1-TP 5M	2-37
B1807	90600-0473	INDUCTIVE SWITCH E2A-S08KS01-WP-B1-TP 5M	2-37
B1810	90600-0821	LEVEL PR.,LEVELFLEX-M FMP41C-AKTJKB11A2Y	1-305
B1816	90600-0473	INDUCTIVE SWITCH E2A-S08KS01-WP-B1-TP 5M	2-129
B1823	90459-0472	KEY SAF.SW. AZ 16 02ZVRK-M20-2152-2254	1-421
B 2102	90274-0042	PRESSURE GUARD, 200 KPA	7-71, 7-73
B2110	90459-0180	FLOW SWITCH, 0,1 - 2,5 L/MIN	7-19
B2111	90459-0180	FLOW SWITCH, 0,1 - 2,5 L/MIN	7-19
B2201	90274-0074	PRESS. SW. 5,3 BAR, PEV-1/4-B-SA22357	7-79
B2310	90459-1224	FILTER UNIT, MDF-BNHC-30-LB10-C1.0/B6	2-81
B2320	90457-0019	LEVEL PROBE, HMFB-S=45-0=80-0=90-T70	2-79
B2401	90274-0084	PRESSURE GUARD, 1800 KPA	2-89
B2403	90459-1038	PRESSURE TRANSMITTER, 250BAR	2-83
B2404	90459-1038	PRESSURE TRANSMITTER, 250BAR	2-83
B 2501	90274-0056	PRESS.SWITCH 1-12BAR, PEV-1/4-B-SA22358	7-27
B2510	90326-0057	THERMOCOUPLE, CR-AL	7-19
B2540	90274-0108	DUAL PRESSURE GUARD, -20 - 2800 KPA	7-17
B2810	90457-0196	KEY SAF.SW. TZ2RE024PG RC1635	2-185, 2-187, 2-189, 2-191
B2811	90044-0204	KEY SAF.SW. NZIVZ-538-E	2-105
B2812	90457-0196	KEY SAF.SW. TZ2RE024PG RC1635	2-105
B2813	90044-0204	KEY SAF.SW. NZIVZ-538-E	2-185, 2-187
B2830	90457-0196	KEY SAF.SW. TZ2RE024PG RC1635	2-185, 2-187, 2-189, 2-191
B2831	90457-0196	KEY SAF.SW. TZ2RE024PG RC1635	2-105
B2832	90044-0204	KEY SAF.SW. NZIVZ-538-E	2-105
B3102	90274-0082	FLOW SWITCH, 2 - 3 L/MIN	7-35
B3105	90243-0245	MEASURING INSTRUMENT	7-37
B4315	90458-0138	PROX.SWITCH E2EG-X1R5B1-5M	4-291, 4-293
B 5104	1144653-0000	SWITCH	5-327
B5203	90044-0194	PROX.SW. IN5329/IN3002-BPKG(EX90044-104)	5-307, 5-313, 5-315
B5302	90044-0194	PROX.SW. IN5329/IN3002-BPKG(EX90044-104)	5-231, 5-233, 5-235, 5-237, 5-239, 5-241
B5307	90459-4053	THERMOCOUPLE, 5110082-001	5-173, 5-175, 5-177
B5308	90459-4053	THERMOCOUPLE, 5110082-001	5-173, 5-175, 5-177
B5309	90459-4053	THERMOCOUPLE, 5110082-001	5-173, 5-175, 5-177
B5310	90326-0089	THERMOCOUPLE, 5110-089-000	1-293
B5314	90044-0194	PROX.SW. IN5329/IN3002-BPKG(EX90044-104)	5-211
B5402	90232-0104	PH.CELL E3S-CT61-D-5M	5-297, 5-299, 6-61, 6-63
B5403	90232-0103	PH.CELL E3S-CT61-L-5M	5-297, 5-299, 6-61, 6-63
B5501	90232-0104	PH.CELL E3S-CT61-D-5M	5-297, 5-299, 6-61, 6-63
B5502	90232-0103	PH.CELL E3S-CT61-L-5M	5-297, 5-299, 6-61, 6-63
B5516	90600-1769	FLOW SENSOR, SFE1-LF-F200-HQ8-P2I-M12	2-161, 2-163, 2-165
B5601	90232-0103	PH.CELL E3S-CT61-L-5M	5-331, 6-81
B5602	90232-0104	PH.CELL E3S-CT61-D-5M	5-331, 6-81
B6105	90044-0194	PROX.SW. IN5329/IN3002-BPKG(EX90044-104)	8-31
B6107	90600-0460	INDUCTIVE SWITCH, E2A-M12KN05-M1-B1-TP	8-241
B6201	90044-0194	PROX.SW. IN5329/IN3002-BPKG(EX90044-104)	8-135
B6202	90044-0194	PROX.SW. IN5329/IN3002-BPKG(EX90044-104)	8-135
B6203	90600-0473	INDUCTIVE SWITCH E2A-S08KS01-WP-B1-TP 5M	8-25
B6204	90044-0194	PROX.SW. IN5329/IN3002-BPKG(EX90044-104)	8-135
B6205	90458-1535	TRANSDUCER, BTL5-A11-M0850-P-S32	8-143
B6208	90458-0138	PROX.SWITCH E2EG-X1R5B1-5M	8-135
B6209	90459-0472	KEY SAF.SW. AZ 16 02ZVRK-M20-2152-2254	8-111, 8-113
B7210	90232-0129	PH.CELL E3S-CR61-5M	8-245
B7211	90232-0129	PH.CELL E3S-CR61-5M	8-129
B7304	90326-0054	THERMOCOUPLE, CR-AL STD.GR, 12826-36	8-165
B7401	90232-0106	PH.CELL E3S-CR11-5M	8-245
B7411	90600-0460	INDUCTIVE SWITCH, E2A-M12KN05-M1-B1-TP	8-111, 8-113
B7412	90044-0165	PROX.SWITCH SME-8-K5-LED-24	8-127
B7414	90600-0460	INDUCTIVE SWITCH, E2A-M12KN05-M1-B1-TP	8-111, 8-113
B7430	90044-0165	PROX.SWITCH SME-8-K5-LED-24	8-97
B7431	90044-0165	PROX.SWITCH SME-8-K5-LED-24	8-97
B7432	90044-0165	PROX.SWITCH SME-8-K5-LED-24	8-97
B7433	90044-0165	PROX.SWITCH SME-8-K5-LED-24	8-97
B7501	90232-0106	PH.CELL E3S-CR11-5M	8-245
B7512	90044-0165	PROX.SWITCH SME-8-K5-LED-24	8-127
B7801	90459-0472	KEY SAF.SW. AZ 16 02ZVRK-M20-2152-2254	8-111, 8-113
B7806	90459-0472	KEY SAF.SW. AZ 16 02ZVRK-M20-2152-2254	8-111, 8-113
B7807	90459-0472	KEY SAF.SW. AZ 16 02ZVRK-M20-2152-2254	8-111, 8-113
B9104	90458-2241	PRESSURE SWITCH 0,5-10 BAR ADJUSTABLE	1-257
B9106	90326-0060	THERMOCOUPLE, CR-AL	1-285
B9107	90600-0463	INDUCTIVE SWITCH,E2A-M12LN05-WP-B1-TP 5M	1-285
B9108	90600-0463	INDUCTIVE SWITCH,E2A-M12LN05-WP-B1-TP 5M	1-285
B9109	90600-0463	INDUCTIVE SWITCH,E2A-M12LN05-WP-B1-TP 5M	1-285
B9110	90600-0463	INDUCTIVE SWITCH,E2A-M12LN05-WP-B1-TP 5M	1-285
B9111	90600-0463	INDUCTIVE SWITCH,E2A-M12LN05-WP-B1-TP 5M	1-285
B9113	2672972-0000	BOLT	1-263
B9116	2672973-0000	ELECTRODE	1-263
B9117	90600-1154	FLOW METER,D-6230-HGB-BB-AV-99-0-N2/IP65	1-257
B9118	90459-6215	FLOW SWITCH BFS-10-N-G1/4-MS-NO-ST	1-257

Pos	Part No	Description	Page No
B			
B9121	90459-2122	THERMOCOUPLE, EN-5130060-0001	1-255
B9122	90326-0053	THERMOCOUPLE, 12826-35	1-255
B43011	90458-0601	CONTRAST SCANNER, KT15W-P2110S01	4-249, 4-251, 4-253
B43012	90458-0601	CONTRAST SCANNER, KT15W-P2110S01	4-249, 4-251, 4-253
B72232	90458-0677	PROX.SWITCH E2EG-X5MB1-M1	8-251, 8-253
B72234	90458-0677	PROX.SWITCH E2EG-X5MB1-M1	8-251, 8-253
B74031	90458-0602	CONTRAST SCANNER, KT15W-P2213S02	8-169
B74032	90458-0602	CONTRAST SCANNER, KT15W-P2213S02	8-169
C			
C1314	90458-1092	PROPORTIONAL VALVE 0 - 10V/0-6 BAR	1-375
C1315	90458-1092	PROPORTIONAL VALVE 0 - 10V/0-6 BAR	1-367
C1501	90459-3650	DOUBLE ACTING, MINI-ISO, CYL 25-40	1-199
C7410	90459-2101	CYLINDER, ADVC-80-25-I-P	8-167
C7412	90239-0861	DOUBLE ACTING, MINI-ISO, CYL. 32-125	8-99
C7412	90459-1849	DOUBLE ACTING, SHUTTLE, CYL. 40-550	8-127
C7414	90239-0832	DOUBLE ACTING, MINI-ISO, CYL. 25-125	8-187
C7415	90239-0832	DOUBLE ACTING, MINI-ISO, CYL. 25-125	8-195
C7420	90239-0861	DOUBLE ACTING, MINI-ISO, CYL. 32-125	8-101
C7420	90459-3370	DOUBLE ACTING, PROFILE,CYL 32-140	8-107
C7421	90459-3370	DOUBLE ACTING, PROFILE,CYL 32-140	8-109
C7430	90459-2647	DOUBLE ACTING, SHUTTLE, CYL. 25-780	8-97
C7432	90459-2647	DOUBLE ACTING, SHUTTLE, CYL. 25-780	8-97
C9115	90459-1420	PROPORTIONAL VALVE 0 - 10V/0-6 BAR	1-257
C73031	90459-0503	CYLINDER, ADVC-16-10-I-P	8-185
C73032	90459-0503	CYLINDER, ADVC-16-10-I-P	8-185
C73151	90459-0503	CYLINDER, ADVC-16-10-I-P	8-197
C73152	90459-0503	CYLINDER, ADVC-16-10-I-P	8-197
C74071	90459-1509	CYLINDER, ADVC-20-20-I-P	8-167
C74072	90459-1509	CYLINDER, ADVC-20-20-I-P	8-167
C74081	90459-2102	CYLINDER, AEVC 100-25-I-P	8-167
C74082	90459-2102	CYLINDER, AEVC 100-25-I-P	8-167
D			
DC010	2641203-0000	TEMPLATE	11-5
DC020	2641204-0000	TEMPLATE	11-5
DC030	2642146-0000	TEMPLATE	11-5
DC040	2503720-0100	OPENING FORCE TESTER	11-5
DS010	90296-0068	SHELL ALVANIA GREASE EP 2	10-9
DS010	90459-2181	BELT TENSION METER, TSM 4	11-5
DS020	1548454-0000	DISC	10-9
DS020	2646428-0100	LIFTING UNIT	11-5
D100	90600-1223	CPU374, ETHERNET COMMUNICATION	9-97, 9-99
D900	90459-6559	PROCESSOR L63, SERIES B, 1756-L63/B	9-93
E			
E001	90600-4050	LIGHT FIXTURE, TCH128 1XTL5-28W/830 HF	9-49, 9-51
E002	90600-4050	LIGHT FIXTURE, TCH128 1XTL5-28W/830 HF	9-49, 9-51
EC010	90233-0028	TUBE FUSE 10A, A070GRB10T13 G330010	10-9
EC010	90243-0203	MEASURING INSTRUMENT- ZONOSCOPE	11-5
EC020	90233-0029	TUBE FUSE 25A, A070GRB25T13 L330014	10-9
EC020	2559112-0100	CALIBRATION EQUIPMENT	11-5
EC030	90233-0027	TUBE FUSE 16A, A070GRB16T13 J330012	10-9
EC040	90459-1254	TUBE FUSE, 4A 500V	10-9
E721	90600-4048	LIGHT FIXTURE, TCH128 1XTL5-14W/830 HF	9-19
E900	90459-6856	FEEDER BLOCK, FAZ/FIP-XVS-KL	9-139
E901	90459-6856	FEEDER BLOCK, FAZ/FIP-XVS-KL	9-139
E7702	90164-0015	LIGHT FIXTURE, RL70CV-111 / 230V 50HZ	8-111, 8-113
E7705	90164-0015	LIGHT FIXTURE, RL70CV-111 / 230V 50HZ	8-111, 8-113
F			
F020	90233-0028	TUBE FUSE 10A, A070GRB10T13 G330010	9-127, 9-129
F021	90233-0028	TUBE FUSE 10A, A070GRB10T13 G330010	9-127, 9-129
F022	90233-0029	TUBE FUSE 25A, A070GRB25T13 L330014	9-127, 9-129
F023	90233-0029	TUBE FUSE 25A, A070GRB25T13 L330014	9-127, 9-129
F024	90233-0028	TUBE FUSE 10A, A070GRB10T13 G330010	9-127, 9-129
F025	90233-0029	TUBE FUSE 25A, A070GRB25T13 L330014	9-127, 9-129
F026	90233-0027	TUBE FUSE 16A, A070GRB16T13 J330012	9-127, 9-129
F026	90233-0028	TUBE FUSE 10A, A070GRB10T13 G330010	9-127, 9-129
F027	90233-0027	TUBE FUSE 16A, A070GRB16T13 J330012	9-127, 9-129
F028	90459-1254	TUBE FUSE, 4A 500V	9-127, 9-129
F029	90459-1254	TUBE FUSE, 4A 500V	9-127, 9-129
F030	90459-1254	TUBE FUSE, 4A 500V	9-127, 9-129
F031	351416-0100	MINIATURE CIRC. BREAK., FAZ -D10 1-POLE	9-139
F032	351416-0100	MINIATURE CIRC. BREAK., FAZ -D10 1-POLE	9-139
F033	351416-0100	MINIATURE CIRC. BREAK., FAZ -D10 1-POLE	9-139
F034	351416-0160	MINIATURE CIRC. BREAK., FAZ -D16 1-POLE	9-139
F035	351416-0160	MINIATURE CIRC. BREAK., FAZ -D16 1-POLE	9-139
F036	90459-5687	FUSE 1 A 250 VAC	9-127, 9-129
F037	90233-0062	TUBE FUSE, 4A 600V	9-127, 9-129
F038	351416-0010	MINIATURE CIRC. BREAK., FAZ -D1 1-POLE	9-139
F039	351418-0100	MINIATURE CIRC. BREAK., FAZ-D10/3 3-POLE	9-139
F041	354000-0100	MINIATURE CIRCUIT BREAKER, FAZ-C10/1	9-33
F042	90233-0027	TUBE FUSE 16A, A070GRB16T13 J330012	9-127, 9-129
F045	90233-0027	TUBE FUSE 16A, A070GRB16T13 J330012	9-127, 9-129
F046	90233-0027	TUBE FUSE 16A, A070GRB16T13 J330012	9-127, 9-129

Pos	Part No	Description	Page No
F			
F046	90233-0028	TUBE FUSE 10A, A070GRB10T13 G330010	9-127, 9-129
F050	351418-0060	MINIATURE CIRC. BREAK., FAZ-D6/3 3-POLE	9-139
F051	351418-0400	MINIATURE CIRC. BREAK.,FAZ-D40/3 3-POLE	9-139
F052	351416-0060	MINIATURE CIRC. BREAK., FAZ -D6 1-POLE	9-139
F053	354000-0100	MINIATURE CIRCUIT BREAKER, FAZ-C10/1	9-139
F054	90459-5811	RESIDUAL CURRENT DEVICE, FI-25/2/003-A	9-149, 9-151
F055	351416-0020	MINIATURE CIRC. BREAK., FAZ -D2 1-POLE	9-139
F059	351416-0060	MINIATURE CIRC. BREAK., FAZ -D6 1-POLE	9-139
F060	354000-0100	MINIATURE CIRCUIT BREAKER, FAZ-C10/1	9-145, 9-147
F061	354000-0100	MINIATURE CIRCUIT BREAKER, FAZ-C10/1	9-145, 9-147
F062	354000-0100	MINIATURE CIRCUIT BREAKER, FAZ-C10/1	9-145, 9-147
F063	354000-0100	MINIATURE CIRCUIT BREAKER, FAZ-C10/1	9-145, 9-147
F064	351416-0160	MINIATURE CIRC. BREAK., FAZ -D16 1-POLE	9-145, 9-147
F066	351416-0060	MINIATURE CIRC. BREAK., FAZ -D6 1-POLE	9-145, 9-147
F067	354000-0040	MINIATURE CIRCUIT BREAKER, FAZ-C4/1	9-145, 9-147
FF010	1478583-0100	PRESSURE GAUGE	11-5
FF010	2743397-0000	SHIM	10-15, 10-17, 10-19, 10-21, 10-23, 10-25
FF010	2838224-0000	SHIM	10-15, 10-17, 10-19, 10-21, 10-23, 10-25
FF010	2843899-0000	SHIM	10-15, 10-17, 10-19, 10-21, 10-23, 10-25
FF020	1350497-0000	ASSEMBLY TOOL	11-5
FF020	2680332-0000	SHIM	10-15, 10-17, 10-19, 10-21, 10-23, 10-25
FF030	263673-0000	GASKET	10-15, 10-17, 10-19, 10-21, 10-23, 10-25
FF030	1350498-0000	ASSEMBLY TOOL	11-5
FF040	2838228-0000	SHIM	10-15, 10-17, 10-19, 10-21, 10-23, 10-25
FF040	2843903-0000	SHIM	10-15, 10-17, 10-19, 10-21, 10-23, 10-25
FF040	2878048-0000	SHIM	10-15, 10-17, 10-19, 10-21, 10-23, 10-25
FF050	2945064-0000	FINGER	10-15, 10-17, 10-19, 10-21, 10-23, 10-25
F150	1523691-0100	BLOWING DEVICE	1-143, 1-145
F700	351416-0160	MINIATURE CIRC. BREAK., FAZ -D16 1-POLE	9-139
F700:1	90459-5813	AUXILARY CONTACT, FAZ-XHI11	9-139
F701	351416-0160	MINIATURE CIRC. BREAK., FAZ -D16 1-POLE	9-139
F701:1	90459-5813	AUXILARY CONTACT, FAZ-XHI11	9-139
F720	354000-0100	MINIATURE CIRCUIT BREAKER, FAZ-C10/1	9-33
F721	354000-0100	MINIATURE CIRCUIT BREAKER, FAZ-C10/1	9-33
F722	90459-5811	RESIDUAL CURRENT DEVICE, FI-25/2/003-A	9-33
F760	351416-0160	MINIATURE CIRC. BREAK., FAZ -D16 1-POLE	9-33
F761	351416-0160	MINIATURE CIRC. BREAK., FAZ -D16 1-POLE	9-33
G			
G001	90459-2938	POWER SUPPLY, 6EP1437-3BA00	9-49, 9-51
G002	90459-2939	POWER SUPPLY UNIT 6EP1961-3BA00	9-53
G003	90459-2939	POWER SUPPLY UNIT 6EP1961-3BA00	9-53
G010	90459-3449	VARIABLE FREQUENCY DRIVE 22A-A2P3N104	9-123, 9-125
G011	90459-3449	VARIABLE FREQUENCY DRIVE 22A-A2P3N104	9-123, 9-125
G012	90459-3449	VARIABLE FREQUENCY DRIVE 22A-A2P3N104	9-123, 9-125
G013	90459-3450	VARIABLE FREQUENCY DRIVE 22A-A4P5N104	9-123, 9-125
G014	90459-3450	VARIABLE FREQUENCY DRIVE 22A-A4P5N104	9-123, 9-125
G015	90600-1842	VARIABLE FREQUENCY DRIVE 22A-D6P0N104	9-135, 9-137
G100	90031-0068	PLC, POWER SUPPLY	9-97, 9-99
G101	90031-0068	PLC, POWER SUPPLY	9-97, 9-99
G102	90031-0068	PLC, POWER SUPPLY	9-97, 9-99
G103	90031-0068	PLC, POWER SUPPLY	9-97, 9-99
G104	90031-0068	PLC, POWER SUPPLY	9-97, 9-99
G108	90459-7198	AUXILIARY BATTERY MODULE, IC693ACC302	9-77, 9-79, 9-81, 9-83, 9-85
G900	90459-7267	POWER SUPPLY 24VDC, 1756-PB75/B	9-93
G910	90459-5886	POWER SUPPLY UNIT 115-230 VAC/24VDC100W	9-77, 9-79, 9-81, 9-83, 9-85
H			
H2801	2540716-0100	SIGNAL LAMP	2-229
H7703	90052-0011	HORN HOOTERT 24:48VDC.PT NO.1YA030221	8-111, 8-113
H7703	2540716-0100	SIGNAL LAMP	2-221, 2-223
J			
JS010	28509-0000	WASHER	10-9
JS010	1110083-0002	DOLLY	10-15, 10-17, 10-19, 10-21, 10-23, 10-25
JS010	1520633-0002	DOLLY	10-15, 10-17, 10-19, 10-21, 10-23, 10-25
JS010	1520633-0005	DOLLY	10-15, 10-17, 10-19, 10-21, 10-23, 10-25
JS010	1566845-0002	DOLLY	10-15, 10-17, 10-19, 10-21, 10-23, 10-25
JS010	2725981-0100	SETTING TOOL	11-5
JS020	32544-0000	INSULATION NUT	10-9
JS020	1035362-0100	MEASURING DEVICE	11-5
JS020	1110930-0000	INDUCTOR	10-15, 10-17, 10-19, 10-21, 10-23, 10-25
JS020	1110931-0000	INDUCTOR	10-15, 10-17, 10-19, 10-21, 10-23, 10-25
JS020	1110932-0000	INDUCTOR	10-15, 10-17, 10-19, 10-21, 10-23, 10-25
JS020	1110934-0000	INDUCTOR	10-15, 10-17, 10-19, 10-21, 10-23, 10-25
JS020	1110936-0000	INDUCTOR	10-15, 10-17, 10-19, 10-21, 10-23, 10-25
JS020	1110937-0000	INDUCTOR	10-15, 10-17, 10-19, 10-21, 10-23, 10-25
JS020	1110938-0000	INDUCTOR	10-15, 10-17, 10-19, 10-21, 10-23, 10-25
JS020	1520167-0000	INDUCTOR	10-15, 10-17, 10-19, 10-21, 10-23, 10-25
JS020	1533046-0000	INDUCTOR	10-15, 10-17, 10-19, 10-21, 10-23, 10-25
JS020	1566783-0000	INDUCTOR	10-15, 10-17, 10-19, 10-21, 10-23, 10-25
JS020	1566843-0000	INDUCTOR	10-15, 10-17, 10-19, 10-21, 10-23, 10-25
JS020	2546474-0000	INDUCTOR	10-15, 10-17, 10-19, 10-21, 10-23, 10-25
JS020	2587466-0000	INDUCTOR	10-15, 10-17, 10-19, 10-21, 10-23, 10-25
JS020	2587467-0000	INDUCTOR	10-15, 10-17, 10-19, 10-21, 10-23, 10-25

Pos	Part No	Description	Page No
J			
JS020	2610956-0000	INDUCTOR	10-15, 10-17, 10-19, 10-21, 10-23, 10-25
JS020	2663377-0000	INDUCTOR	10-15, 10-17, 10-19, 10-21, 10-23, 10-25
JS020	2663378-0000	INDUCTOR	10-15, 10-17, 10-19, 10-21, 10-23, 10-25
JS020	2767760-0000	INDUCTOR	10-15, 10-17, 10-19, 10-21, 10-23, 10-25
JS030	72846-0101	COMPRESSION SPRING	11-5
JS030	107426-0000	GUIDE SLEEVE	10-9
JS030	1035831-0000	VOLUME SHIM	10-15, 10-17, 10-19, 10-21, 10-23, 10-25
JS030	1037735-0000	VOLUME SHIM	10-15, 10-17, 10-19, 10-21, 10-23, 10-25
JS030	1040755-0000	VOLUME SHIM	10-15, 10-17, 10-19, 10-21, 10-23, 10-25
JS030	1346158-0000	VOLUME SHIM	10-15, 10-17, 10-19, 10-21, 10-23, 10-25
JS030	1349208-0000	VOLUME SHIM	10-15, 10-17, 10-19, 10-21, 10-23, 10-25
JS030	1487627-0000	VOLUME SHIM	10-15, 10-17, 10-19, 10-21, 10-23, 10-25
JS030	1511253-0000	VOLUME SHIM	10-15, 10-17, 10-19, 10-21, 10-23, 10-25
JS030	1511336-0000	VOLUME SHIM	10-15, 10-17, 10-19, 10-21, 10-23, 10-25
JS030	1511337-0000	VOLUME SHIM	10-15, 10-17, 10-19, 10-21, 10-23, 10-25
JS030	1538637-0000	VOLUME SHIM	10-15, 10-17, 10-19, 10-21, 10-23, 10-25
JS030	1539902-0000	VOLUME SHIM	10-15, 10-17, 10-19, 10-21, 10-23, 10-25
JS030	1549594-0000	VOLUME SHIM	10-15, 10-17, 10-19, 10-21, 10-23, 10-25
JS030	1549830-0000	VOLUME SHIM	10-15, 10-17, 10-19, 10-21, 10-23, 10-25
JS030	2594891-0000	VOLUME SHIM	10-15, 10-17, 10-19, 10-21, 10-23, 10-25
JS030	2605166-0000	VOLUME SHIM	10-15, 10-17, 10-19, 10-21, 10-23, 10-25
JS030	2640139-0000	VOLUME SHIM	10-15, 10-17, 10-19, 10-21, 10-23, 10-25
JS030	2654290-0000	VOLUME SHIM	10-15, 10-17, 10-19, 10-21, 10-23, 10-25
JS030	2660293-0000	VOLUME SHIM	10-15, 10-17, 10-19, 10-21, 10-23, 10-25
JS030	2660393-0000	VOLUME SHIM	10-15, 10-17, 10-19, 10-21, 10-23, 10-25
JS030	2662169-0000	VOLUME SHIM	10-15, 10-17, 10-19, 10-21, 10-23, 10-25
JS030	2674328-0000	VOLUME SHIM	10-15, 10-17, 10-19, 10-21, 10-23, 10-25
JS030	2678717-0000	VOLUME SHIM	10-15, 10-17, 10-19, 10-21, 10-23, 10-25
JS030	2678839-0000	VOLUME SHIM	10-15, 10-17, 10-19, 10-21, 10-23, 10-25
JS030	2827055-0000	VOLUME SHIM	10-15, 10-17, 10-19, 10-21, 10-23, 10-25
JS030	2909852-0000	SHIM	10-15, 10-17, 10-19, 10-21, 10-23, 10-25
JS030	2909853-0000	SHIM	10-15, 10-17, 10-19, 10-21, 10-23, 10-25
JS035	1539843-0000	VOLUME SHIM	10-15, 10-17, 10-19, 10-21, 10-23, 10-25
JS035	2594890-0000	VOLUME SHIM	10-15, 10-17, 10-19, 10-21, 10-23, 10-25
JS035	2660390-0000	VOLUME SHIM	10-15, 10-17, 10-19, 10-21, 10-23, 10-25
JS035	2672745-0000	VOLUME SHIM	10-15, 10-17, 10-19, 10-21, 10-23, 10-25
JS040	90243-0146	TOOL	11-5
JS040	1036584-0000	WASHER	10-9
JS040	1348955-0000	KNIFE	10-15, 10-17, 10-19, 10-21, 10-23, 10-25
JS040	1348956-0000	KNIFE	10-15, 10-17, 10-19, 10-21, 10-23, 10-25
JS040	1348966-0000	KNIFE	10-15, 10-17, 10-19, 10-21, 10-23, 10-25
JS040	1549828-0000	KNIFE	10-15, 10-17, 10-19, 10-21, 10-23, 10-25
JS040	2664761-0000	KNIFE	10-15, 10-17, 10-19, 10-21, 10-23, 10-25
JS050	90206-0330	SOCKET WRENCH 2"9	11-5
JS050	315211-0104	BONDED SEAL SS/NBR90 M8	10-9
JS050	1037254-0000	SHIM	10-15, 10-17, 10-19, 10-21, 10-23, 10-25
JS060	312115-0297	SCREW ISO4762 M4X25 A4 80	10-9
JS060	1095884-0100	ASSEMBLY TOOL	11-5
JS060	1538109-0000	COMPRESSION SPRING	10-15, 10-17, 10-19, 10-21, 10-23, 10-25
JS060	2774493-0000	COMPRESSION SPRING	10-15, 10-17, 10-19, 10-21, 10-23, 10-25
JS070	312125-0295	SCREW ISO 1207 M4X20 A4	10-9
JS070	2637599-0100	ALIGNMENT TOOL	11-5
JS080	315211-0103	BONDED SEAL SS/NBR90 M6	10-9
JS080	2637602-0100	DRILLING JIG	11-5
JS090	315202-0101	O-RING 3,1X1,6 MM	10-9
JS100	2767478-0001	ROLLER	10-15, 10-17, 10-19, 10-21, 10-23, 10-25
JS100	2767478-0002	ROLLER	10-15, 10-17, 10-19, 10-21, 10-23, 10-25
JS100	2767478-0003	ROLLER	10-15, 10-17, 10-19, 10-21, 10-23, 10-25
JS100	2767478-0004	ROLLER	10-15, 10-17, 10-19, 10-21, 10-23, 10-25
K			
K001	90459-5440	CONTACTOR 4KW 24VDC, DILM9-01	9-107
K002	90459-5440	CONTACTOR 4KW 24VDC, DILM9-01	9-107
K003	90459-5440	CONTACTOR 4KW 24VDC, DILM9-01	9-107
K004	90459-5440	CONTACTOR 4KW 24VDC, DILM9-01	9-107
K005	90459-5440	CONTACTOR 4KW 24VDC, DILM9-01	9-107
K005:1	90459-6852	AUXILIARY CONTACT, DILA-XHI22	9-107
K006	90459-5441	CONTACTOR 7,5KW 24VDC, DILM17-01	9-107
K007	90459-5440	CONTACTOR 4KW 24VDC, DILM9-01	9-107
K008	90459-5441	CONTACTOR 7,5KW 24VDC, DILM17-01	9-107
K009	90459-5440	CONTACTOR 4KW 24VDC, DILM9-01	9-107
K009:1	90459-6852	AUXILIARY CONTACT, DILA-XHI22	9-107
K020	90459-5441	CONTACTOR 7,5KW 24VDC, DILM17-01	9-131
K021	90459-5441	CONTACTOR 7,5KW 24VDC, DILM17-01	9-131
K022	90459-5441	CONTACTOR 7,5KW 24VDC, DILM17-01	9-131
K023	90459-5441	CONTACTOR 7,5KW 24VDC, DILM17-01	9-131
K024	90459-5440	CONTACTOR 4KW 24VDC, DILM9-01	9-131
K025	90459-5441	CONTACTOR 7,5KW 24VDC, DILM17-01	9-131
K026	90459-5441	CONTACTOR 7,5KW 24VDC, DILM17-01	9-131
K028	90459-5441	CONTACTOR 7,5KW 24VDC, DILM17-01	9-131
K029	90459-5441	CONTACTOR 7,5KW 24VDC, DILM17-01	9-131
K030	90459-5441	CONTACTOR 7,5KW 24VDC, DILM17-01	9-131
K031	90459-5440	CONTACTOR 4KW 24VDC, DILM9-01	9-141, 9-143

Pos	Part No	Description	Page No
K			
K031:1	90459-6852	AUXILIARY CONTACT, DILA-XHI22	9-141, 9-143
K034	90459-5440	CONTACTOR 4KW 24VDC, DILM9-01	9-141, 9-143
K035	90459-5440	CONTACTOR 4KW 24VDC, DILM9-01	9-141, 9-143
K036	90459-5440	CONTACTOR 4KW 24VDC, DILM9-01	9-131
K037	90459-5440	CONTACTOR 4KW 24VDC, DILM9-01	9-131
K039	90459-5440	CONTACTOR 4KW 24VDC, DILM9-01	9-141, 9-143
K040	90459-5440	CONTACTOR 4KW 24VDC, DILM9-01	9-31
K041	90459-5440	CONTACTOR 4KW 24VDC, DILM9-01	9-31
K042	90459-5440	CONTACTOR 4KW 24VDC, DILM9-01	9-141, 9-143
K046	90459-5441	CONTACTOR 7,5KW 24VDC, DILM17-01	9-141, 9-143
K104	90119-0108	RELAY OMRON G2R-2-SNI-24DC	9-77, 9-79, 9-81, 9-83, 9-85
K105	90119-0108	RELAY OMRON G2R-2-SNI-24DC	9-77, 9-79, 9-81, 9-83, 9-85
K106	90075-0141	CONTACTOR, 4KW 24VDC	9-77, 9-79, 9-81, 9-83, 9-85
K107	90075-0141	CONTACTOR, 4KW 24VDC	9-77, 9-79, 9-81, 9-83, 9-85
K108	90119-0108	RELAY OMRON G2R-2-SNI-24DC	9-77, 9-79, 9-81, 9-83, 9-85
K110	90119-0108	RELAY OMRON G2R-2-SNI-24DC	9-77, 9-79, 9-81, 9-83, 9-85
K111	90119-0108	RELAY OMRON G2R-2-SNI-24DC	9-77, 9-79, 9-81, 9-83, 9-85
K112	90119-0108	RELAY OMRON G2R-2-SNI-24DC	9-77, 9-79, 9-81, 9-83, 9-85
K113	90119-0108	RELAY OMRON G2R-2-SNI-24DC	9-77, 9-79, 9-81, 9-83, 9-85
K114	90119-0108	RELAY OMRON G2R-2-SNI-24DC	9-77, 9-79, 9-81, 9-83, 9-85
K115	90119-0108	RELAY OMRON G2R-2-SNI-24DC	9-77, 9-79, 9-81, 9-83, 9-85
K117	90119-0108	RELAY OMRON G2R-2-SNI-24DC	9-77, 9-79, 9-81, 9-83, 9-85
K120	90119-0108	RELAY OMRON G2R-2-SNI-24DC	9-77, 9-79, 9-81, 9-83, 9-85
K121	90119-0108	RELAY OMRON G2R-2-SNI-24DC	9-77, 9-79, 9-81, 9-83, 9-85
K122	90119-0108	RELAY OMRON G2R-2-SNI-24DC	9-77, 9-79, 9-81, 9-83, 9-85
K123	90119-0108	RELAY OMRON G2R-2-SNI-24DC	9-77, 9-79, 9-81, 9-83, 9-85
K124	90119-0108	RELAY OMRON G2R-2-SNI-24DC	9-77, 9-79, 9-81, 9-83, 9-85
K125	90119-0056	RELAY, AUXILIARY MK3P5-S 24VDC	9-77, 9-79, 9-81, 9-83, 9-85
K126	90119-0108	RELAY OMRON G2R-2-SNI-24DC	9-77, 9-79, 9-81, 9-83, 9-85
K129	90075-0141	CONTACTOR, 4KW 24VDC	9-77, 9-79, 9-81, 9-83, 9-85
K131	90075-0141	CONTACTOR, 4KW 24VDC	9-77, 9-79, 9-81, 9-83, 9-85
K132	90119-0056	RELAY, AUXILIARY MK3P5-S 24VDC	9-77, 9-79, 9-81, 9-83, 9-85
K133	90119-0108	RELAY OMRON G2R-2-SNI-24DC	9-77, 9-79, 9-81, 9-83, 9-85
K134	90119-0108	RELAY OMRON G2R-2-SNI-24DC	9-77, 9-79, 9-81, 9-83, 9-85
K135	90119-0108	RELAY OMRON G2R-2-SNI-24DC	9-77, 9-79, 9-81, 9-83, 9-85
K136	90119-0108	RELAY OMRON G2R-2-SNI-24DC	9-77, 9-79, 9-81, 9-83, 9-85
K137	90119-0108	RELAY OMRON G2R-2-SNI-24DC	9-77, 9-79, 9-81, 9-83, 9-85
K138	90119-0108	RELAY OMRON G2R-2-SNI-24DC	9-77, 9-79, 9-81, 9-83, 9-85
K139	90119-0108	RELAY OMRON G2R-2-SNI-24DC	9-77, 9-79, 9-81, 9-83, 9-85
K143	90119-0108	RELAY OMRON G2R-2-SNI-24DC	9-77, 9-79, 9-81, 9-83, 9-85
K144	90119-0108	RELAY OMRON G2R-2-SNI-24DC	9-77, 9-79, 9-81, 9-83, 9-85
K202	90119-0082	SSR 90119-67 + HEAT SINK	9-109
K203	90119-0082	SSR 90119-67 + HEAT SINK	9-109
K204	90119-0082	SSR 90119-67 + HEAT SINK	9-109
K205	90119-0082	SSR 90119-67 + HEAT SINK	9-109
K206	90119-0082	SSR 90119-67 + HEAT SINK	9-109
K207	90119-0082	SSR 90119-67 + HEAT SINK	9-109
K208	90119-0082	SSR 90119-67 + HEAT SINK	9-109
K209	90119-0082	SSR 90119-67 + HEAT SINK	9-109
K210	90119-0082	SSR 90119-67 + HEAT SINK	9-109
K211	90119-0082	SSR 90119-67 + HEAT SINK	9-109
K212	90119-0082	SSR 90119-67 + HEAT SINK	9-117, 9-119
K213	90119-0082	SSR 90119-67 + HEAT SINK	9-109, 9-117, 9-119
K214	90119-0082	SSR 90119-67 + HEAT SINK	9-109, 9-117, 9-119
K215	90119-0067	SOLID-STATE RELAY, H12WD4850	9-121
K220	90119-0043	OPTO-RELAY, 22DC 60S-3/32VDC	9-121
K221	90119-0043	OPTO-RELAY, 22DC 60S-3/32VDC	9-121
K222	90119-0043	OPTO-RELAY, 22DC 60S-3/32VDC	9-121
K223	90119-0043	OPTO-RELAY, 22DC 60S-3/32VDC	9-121
K224	90119-0043	OPTO-RELAY, 22DC 60S-3/32VDC	9-121
K225	90119-0043	OPTO-RELAY, 22DC 60S-3/32VDC	9-121
K700	90459-5444	CONTACTOR 15KW 24VDC, DILM32-01	9-115
K701	90459-5444	CONTACTOR 15KW 24VDC, DILM32-01	9-115
K720	90459-5441	CONTACTOR 7,5KW 24VDC, DILM17-01	9-31
K721	90119-0108	RELAY OMRON G2R-2-SNI-24DC	9-31
K750	90459-5444	CONTACTOR 15KW 24VDC, DILM32-01	9-31
K751	90459-5444	CONTACTOR 15KW 24VDC, DILM32-01	9-31
K7000	90459-5440	CONTACTOR 4KW 24VDC, DILM9-01	8-227, 8-229
K7001	90459-5440	CONTACTOR 4KW 24VDC, DILM9-01	8-227, 8-229
L			
L4309	1110930-0000	INDUCTOR	4-129, 4-131, 4-133, 4-187, 4-189, 4-191
L4309	1110931-0000	INDUCTOR	4-129, 4-131, 4-133, 4-187, 4-189, 4-191
L4309	1110932-0000	INDUCTOR	4-129, 4-131, 4-133, 4-187, 4-189, 4-191
L4309	1110934-0000	INDUCTOR	4-129, 4-131, 4-133, 4-187, 4-189, 4-191
L4309	1110936-0000	INDUCTOR	4-129, 4-131, 4-133, 4-187, 4-189, 4-191
L4309	1110937-0000	INDUCTOR	4-129, 4-131, 4-133, 4-187, 4-189, 4-191
L4309	1110938-0000	INDUCTOR	4-129, 4-131, 4-133, 4-187, 4-189, 4-191
L4309	1520167-0000	INDUCTOR	4-129, 4-131, 4-133, 4-187, 4-189, 4-191
L4309	1533046-0000	INDUCTOR	4-129, 4-131, 4-133, 4-187, 4-189, 4-191
L4309	1566783-0000	INDUCTOR	4-129, 4-131, 4-133, 4-187, 4-189, 4-191
L4309	1566843-0000	INDUCTOR	4-129, 4-131, 4-133, 4-187, 4-189, 4-191
L4309	2546474-0000	INDUCTOR	4-129, 4-131, 4-133, 4-187, 4-189, 4-191

Pos	Part No	Description	Page No
L			
L4309	2587466-0000	INDUCTOR	4-129, 4-131, 4-133
L4309	2587467-0000	INDUCTOR	4-187, 4-189, 4-191
L4309	2610956-0000	INDUCTOR	4-129, 4-131, 4-133, 4-187, 4-189, 4-191
L4309	2663377-0000	INDUCTOR	4-187, 4-189, 4-191
L4309	2663378-0000	INDUCTOR	4-129, 4-131, 4-133
L4309	2767760-0000	INDUCTOR	4-129, 4-131, 4-133, 4-187, 4-189, 4-191
L4309	2841895-0000	INDUCTOR	4-129, 4-131, 4-133, 4-187, 4-189, 4-191
L4309	2978582-0000	INDUCTOR	4-129, 4-131, 4-133
L4309	2978583-0000	INDUCTOR	4-187, 4-189, 4-191
L6101	2509617-0100	INDUCTOR	8-17
M			
MM.840	90459-0804	MOTOR B3/B5 CE CODE: 159353	1-147
MB010	315229-0105	GASKETS, 48,5X55,5X3,7 MM 2" FDA	10-9
MB020	315229-0104	GASKETS, 35,8X42,8X3,7 MM 1"1/2 FD	10-9
MB030	90459-1037	CRIMP TOOL FOR COAX. CONN. HTG 58-901200	11-5
MB030	315229-0103	GASKETS, 23,1X30,1X3,7 MM 1" FDA	10-9
MB040	315229-0107	GASKETS, 73,9X80,9X3,7 MM 2"1/2 FD	10-9
MB040	2588426-0100	ALIGNMENT TEMPLATE	11-5
MB050	90036-0057	LIGHT BULB, BA9S 28V	10-9
M720	90600-2253	COOLING UNIT, KT17.02.CA 0193	9-19
M1101	90459-4562	COMPRESSOR, 2BV500080H0200	1-207
M1206	90321-0134	CIRC. PUMP TCB25-6LV.230 HZ 50	1-315
M1206	90321-0135	CIRC. PUMP 230V60HZ	1-315
M1213	90458-2466	MOTOR 3GVA071002-CSC-M2VA71B2	2-31
M1501	90459-1226	GEARS, WORM MOTOR VF 44P-10+BN71B 0.37KW	1-181, 1-183
M1505	90045-0189	STEP MOTOR E22NSLT-LNN-NS-02	2-95
M1506	90459-7195	STEPPER MOTOR HRA71-DLB04075	6-77
M1801	2851886-0000	CENTRIFUGAL PUMP	1-303
M2301	90457-0036	3-PHASE MOTOR,FOOT MOUNT.1,1KW,1410 RPM	2-81
M 2501	90321-0116	PUMP GRUNDFOS CHI 2-60	7-27
M2714	90459-7178	SERVO MOTOR MPL-B330P-SJ24AA	4-293
M2715	90459-7178	SERVO MOTOR MPL-B330P-SJ24AA	4-291
M2716	90600-5611	SERVO MOTOR MPS-B560F-MJ52DF	5-319
M3102	90321-0117	PUMP LOWARA SV8-14 F75T	7-41, 7-43
M3102	90321-0120	PUMP SV8-09 F756T, 380V60HZ	7-41, 7-43
M4115	90264-0055	FAN / W25 130-AA 03-01	2-319
M4116	90264-0055	FAN / W25 130-AA 03-01	2-319
M4117	90264-0055	FAN / W25 130-AA 03-01	2-319
M4118	90264-0055	FAN / W25 130-AA 03-01	2-309
M4119	90264-0055	FAN / W25 130-AA 03-01	2-309
M5503	90459-1147	GEARS, WORM MOTOR VF30 F1-10 P63 B14 V6	2-349, 2-351
M6201	90459-6951	GEARS,WORM MOTOR MC 320P2T/15/B5S-SRD057	8-133
M6202	90459-6950	GEARS, WORM MOTOR MC320P2T/15/B5D-SRD057	8-133
M7208	90459-2826	GEARS, HELICAL MOTOR ME0102210012	8-163
M7217	90459-2096	GEARS, WORM MOTOR F2 15 P63 B14 B8 PV 75	8-247
M7700	90600-0753	SERVO MOTOR MPL-B430P-MJ22AA	6-77
M7701	90600-0753	SERVO MOTOR MPL-B430P-MJ22AA	6-77
M7702	90600-0753	SERVO MOTOR MPL-B430P-MJ22AA	6-77
M7703	90600-0753	SERVO MOTOR MPL-B430P-MJ22AA	6-77
M7704	90600-0753	SERVO MOTOR MPL-B430P-MJ22AA	6-77
M7705	90600-0753	SERVO MOTOR MPL-B430P-MJ22AA	6-77
M7706	90600-0753	SERVO MOTOR MPL-B430P-MJ22AA	6-77
M7707	90600-0753	SERVO MOTOR MPL-B430P-MJ22AA	6-77
O			
O2530	90304-0020	RECIPIENTE	7-29
P			
P.S802H	90064-0082	PUSH BUTTON, WHITE	11-85
P.S806H	90064-0082	PUSH BUTTON, WHITE	11-85
P.S801H	90064-0083	PUSH BUTTON, GREEN	11-85
P.S803H	90064-0084	PUSH BUTTON, YELLOW	11-85
P.S804H	90064-0085	PUSH BUTTON, RED	11-85
P1SUP	90166-0195	TUBE 12 MM PA BLUE	2-257
P2SUP	90166-0195	TUBE 12 MM PA BLUE	2-257
P1SUP	90166-0195	TUBE 12 MM PA BLUE	2-259
P2SUP	90166-0195	TUBE 12 MM PA BLUE	2-259
P2PTDIMC	90166-0196	TUBE 14MM PA BLUE	2-257
P2PTDIMC1	90166-0196	TUBE 14MM PA BLUE	2-257
P2PTDIMC	90166-0196	TUBE 14MM PA BLUE	2-257
P2PTDIMC1	90166-0196	TUBE 14MM PA BLUE	2-257
P2PTDIMC	90166-0196	TUBE 14MM PA BLUE	2-259
P2PTDIMC1	90166-0196	TUBE 14MM PA BLUE	2-259
P2PTDIMC	90166-0196	TUBE 14MM PA BLUE	2-259
P2PTDIMC1	90166-0196	TUBE 14MM PA BLUE	2-259
P0FM	90166-0196	TUBE 14MM PA BLUE	7-81
P1	90166-0195	TUBE 12 MM PA BLUE	1-355, 1-357
P001	90459-4033	RECORDER 12-CHANNEL PAPERLESS FDA-APPR	9-149, 9-151
P1:1	90166-0193	TUBE 6 MM PUR BLUE	1-355, 1-357
P1:3	90166-0195	TUBE 12 MM PA BLUE	1-355, 1-357
P2	90166-0013	TUBE 8 MM PA BLUE	1-355, 1-357
P002	90459-0080	RECORDER 6-CHANNEL, LOGOPRINT 500	9-149, 9-151
P003	90459-5187	CONDUCTIVITY TRANSMITTER CLM223-ID7105	9-149, 9-151
P004	90070-0017	WORKING HOURS COUNTER, 7991 DR H?NLE	9-149, 9-151

Pos	Part No	Description	Page No
P			
P005	90053-0029	COUNTER, F524.800FA3C 24VDC	9-149, 9-151
PT010	2564074-0100	TOOLS AND TEMPLATES	11-5
PT020	90459-5181	GREASE LUBRICATION KIT , 400999139	11-5
PT030	2764526-0000	TOOL	11-5
P100	90070-0017	WORKING HOURS COUNTER, 7991 DR H?NLE	9-149, 9-151
P100:1	359241-0201	SIGN: " HOUR METER"	9-149, 9-151
P101	90053-0029	COUNTER, F524.800FA3C 24VDC	9-149, 9-151
P101	90166-0196	TUBE 14MM PA BLUE	2-257, 2-259
P101:1	359241-0482	SIGN "PACKAGE COUNTER"	9-149, 9-151
P102	90166-0195	TUBE 12 MM PA BLUE	2-257, 2-259
P103	90166-0196	TUBE 14MM PA BLUE	2-257, 2-259
P104	90166-0196	TUBE 14MM PA BLUE	2-257, 2-259
P105	90166-0196	TUBE 14MM PA BLUE	2-257, 2-259
P106	90166-0195	TUBE 12 MM PA BLUE	2-257, 2-259
P201	90166-0196	TUBE 14MM PA BLUE	2-257, 2-259
P202	90166-0013	TUBE 8 MM PA BLUE	2-257, 2-259
P203	90166-0196	TUBE 14MM PA BLUE	2-257, 2-259
P204	90166-0195	TUBE 12 MM PA BLUE	2-257, 2-259
P205	90166-0195	TUBE 12 MM PA BLUE	2-257, 2-259
P206	90166-0195	TUBE 12 MM PA BLUE	2-257, 2-259
P207	90166-0195	TUBE 12 MM PA BLUE	2-257, 2-259
Q			
Q001	90459-5324	OVERLOAD PROTECTION, PKZM0-1,6	9-107
Q001:1	90259-0313	AUXILIARY CONTACT 072894 NHI21-PKZM0	9-107
Q002	90459-5326	OVERLOAD PROTECTION, PKZM0-4	9-107
Q002:1	90259-0313	AUXILIARY CONTACT 072894 NHI21-PKZM0	9-107
Q003	90459-5325	OVERLOAD PROTECTION, PKZM0-2,5	9-107
Q003:1	90259-0313	AUXILIARY CONTACT 072894 NHI21-PKZM0	9-107
Q004	90459-5325	OVERLOAD PROTECTION, PKZM0-2,5	9-107
Q004:1	90259-0313	AUXILIARY CONTACT 072894 NHI21-PKZM0	9-107
Q005	90459-5326	OVERLOAD PROTECTION, PKZM0-4	9-107
Q005:1	90259-0313	AUXILIARY CONTACT 072894 NHI21-PKZM0	9-107
Q006	90459-5330	OVERLOAD PROTECTION, PKZM0-16	9-107
Q006:1	90259-0313	AUXILIARY CONTACT 072894 NHI21-PKZM0	9-107
Q007	90459-5324	OVERLOAD PROTECTION, PKZM0-1,6	9-107
Q007:1	90259-0313	AUXILIARY CONTACT 072894 NHI21-PKZM0	9-107
Q008	90459-5328	OVERLOAD PROTECTION, PKZM0-10	9-107
Q008:1	90259-0313	AUXILIARY CONTACT 072894 NHI21-PKZM0	9-107
Q009	90459-5323	OVERLOAD PROTECTION, PKZM0-1	9-107
Q009:1	90259-0313	AUXILIARY CONTACT 072894 NHI21-PKZM0	9-107
Q040	90459-5324	OVERLOAD PROTECTION, PKZM0-1,6	9-33
Q100	90459-6618	CIRCUIT BREAKER, NZMB1-4-A100	7-11
Q700	90459-5333	OVERLOAD PROTECTION, PKZM0-32	9-115
Q700:1	90259-0313	AUXILIARY CONTACT 072894 NHI21-PKZM0	9-115
Q701	90459-5333	OVERLOAD PROTECTION, PKZM0-32	9-115
Q701:1	90259-0313	AUXILIARY CONTACT 072894 NHI21-PKZM0	9-115
Q750	90459-5333	OVERLOAD PROTECTION, PKZM0-32	9-33
Q751	90459-5333	OVERLOAD PROTECTION, PKZM0-32	9-33
R			
R101	90459-1297	RESISTANCE FIXED, 120 OHM, 0,25 W	9-97, 9-99
R102	90459-1297	RESISTANCE FIXED, 120 OHM, 0,25 W	6-77
R807	90121-0120	RESISTANCE FIXED, 0,25 KOHM, 0,125 W	9-149, 9-151
R808	90121-0120	RESISTANCE FIXED, 0,25 KOHM, 0,125 W	9-149, 9-151
R809	90121-0120	RESISTANCE FIXED, 0,25 KOHM, 0,125 W	9-149, 9-151
R903	90459-1297	RESISTANCE FIXED, 120 OHM, 0,25 W	9-93
R1105	90600-2007	HEATING ELEM.15KW 3X230/400V,T90600-2007	1-229
R1208	90206-0070	HEATING ELEMENT 6000W 380/220V	1-315
R1209	90206-0070	HEATING ELEMENT 6000W 380/220V	1-315
R1503	2793360-0000	HEATER	1-221
R5307	90459-0707	HEATING ELEMENT 1500W/220V	5-173, 5-175, 5-177
R5308	90459-0707	HEATING ELEMENT 1500W/220V	5-173, 5-175, 5-177
R5309	90206-0030	HEATING ELEMENT 3000W, 220V	5-173, 5-175, 5-177
R6203	1498047-0000	SEALING BLOCK	8-139
R6204	1524481-0000	SEALING BLOCK	8-145
R7304	90459-2843	HEATING CARTRIDGE, 800W 240V	8-165
R9120	2685342-0000	HEATING ELEMENT	1-255
S			
S001	90458-1651	EMERGENCY STOP, ZB4-BS-844 ZB4-BZ-104	9-69
S003	90111-0122	KEY SWITCH, 2 NO CONTACTS	9-149, 9-151
S003:1	359241-0133	SIGN: " SERVICE SWITCH"	9-149, 9-151
S004	90111-0124	KEY SWITCH, 1NO,1NC CONTACT	9-149, 9-151
S004:1	359241-0122	SIGN: " CLEANING STEAM BARRIER SPACE"	9-149, 9-151
S005	90458-1651	EMERGENCY STOP, ZB4-BS-844 ZB4-BZ-104	9-69
SA010	1498047-0000	SEALING BLOCK	10-9
P.S827	90111-0120	SWITCH, 2 POS.704.510 .0A+704.901.5/A	11-85
P.S834	90458-1651	EMERGENCY STOP, ZB4-BS-844 ZB4-BZ-104	11-85
P.S890	90458-1651	EMERGENCY STOP, ZB4-BS-844 ZB4-BZ-104	11-85
SU010	90243-0447	LASER EQUIPMENT	11-5
SU010	232979-0000	PRESSURE ROLLER (PAK OF 10)	10-15, 10-17, 10-19, 10-21, 10-23, 10-25
SU010	257330-0000	PRESSURE ROLLER (10 PCS)	10-15, 10-17, 10-19, 10-21, 10-23, 10-25
SU010	272479-0000	PRESSURE ROLLER (10PCS)	10-15, 10-17, 10-19, 10-21, 10-23, 10-25
SU010	499387-0000	PRESSURE ROLLER - (10 PCS)	10-15, 10-17, 10-19, 10-21, 10-23, 10-25

Pos	Part No	Description	Page No
S			
SU010	1296877-0100	SEAL KIT	10-9
SU010	1349738-0100	PRESSURE TEST EQUIPMENT	11-5
SU010	1349914-0100	TEMPLATE FILLING PIPE	10-35
SU010	2607089-0000	PRESSURE ROLLER	10-15, 10-17, 10-19, 10-21, 10-23, 10-25
SU020	74305-0100	PULLER	11-5
SU020	1296878-0100	SEAL KIT	10-9
SU020	2523268-0000	SHAFT	10-15, 10-17, 10-19, 10-21, 10-23, 10-25
SU020	2529416-0000	SHAFT	10-15, 10-17, 10-19, 10-21, 10-23, 10-25
SU020	2529417-0000	SHAFT	10-15, 10-17, 10-19, 10-21, 10-23, 10-25
SU020	2529418-0000	SHAFT	10-15, 10-17, 10-19, 10-21, 10-23, 10-25
SU020	2529419-0000	SHAFT	10-15, 10-17, 10-19, 10-21, 10-23, 10-25
SU020	2529420-0000	SHAFT	10-15, 10-17, 10-19, 10-21, 10-23, 10-25
SU020	2793320-0100	TEMPLATE	10-35
SU030	315204-0215	O-RING 19,2X3 MM	10-15, 10-17, 10-19, 10-21, 10-23, 10-25
SU030	315204-0219	O-RING 29,2X3 MM	10-15, 10-17, 10-19, 10-21, 10-23, 10-25
SU030	315204-0223	O-RING 39,2X3 MM	10-15, 10-17, 10-19, 10-21, 10-23, 10-25
SU030	777200-0101	PIPE WRENCH	11-5
SU030	1296879-0100	SEAL KIT	10-9
SU040	90217-0348	GASKET 35,4X46,8X4 MM	10-9
SU040	449969-0100	TOOL DISMOUNTING	11-5
SU040	2500081-0000	ELBOW PIPE	10-15, 10-17, 10-19, 10-21, 10-23, 10-25
SU050	342850-0304	GASKET 35,4X49,1X5,2 1"1/2 FDA	10-9
SU050	533014-0100	LEAK FINDING EQUIPMENT (SUPERSTRUCTURE)	11-5
SU050	2529750-0000	COVERING PANEL	10-15, 10-17, 10-19, 10-21, 10-23, 10-25
SU060	90459-1467	FORCE GAUGE 0-250N, AFG 250N	11-5
SU060	925998-0000	DIAPHRAGM	10-9
SU060	979813-0000	PLUG	10-15, 10-17, 10-19, 10-21, 10-23, 10-25
SU070	342850-0304	GASKET 35,4X49,1X5,2 1"1/2 FDA	10-15, 10-17, 10-19, 10-21, 10-23, 10-25
SU070	342850-0306	GASKET 60,3X76,1X5,2 MM 2"1/2 FDA 3-A	10-9
SU070	2552151-0000	BRACKET	11-5
SU070	2552152-0000	BRACKET	11-5
SU070	2552153-0000	BRACKET	11-5
SU070	2552154-0000	BRACKET	11-5
SU070	2582613-0000	BRACKET	11-5
SU070	2685310-0000	BRACKET	11-5
SU080	342850-0304	GASKET 35,4X49,1X5,2 1"1/2 FDA	10-9
SU080	2532974-0000	SETTING TOOL	11-5
SU080	2811775-0000	SEAL	10-15, 10-17, 10-19, 10-21, 10-23, 10-25
SU090	90459-7315	PUSH DYNAMOMETER 20 - 200N, DT120	11-5
SU120	2569982-0100	SETTING TOOL	11-5
SU130	90243-0328	PAPER ROLL	11-5
SU140	90243-0329	CABLE	11-5
SU150	90243-0330	CABLE	11-5
SU160	2579687-0100	SETTING TOOL	11-5
S900	90458-1651	EMERGENCY STOP, ZB4-BS-844 ZB4-BZ-104	2-339
S901	90064-0082	PUSH BUTTON, WHITE	2-339
S901:1	359301-0519	SIGN "TPOP RESET"	2-339
S902	90064-0082	PUSH BUTTON, WHITE	2-339
S902:1	359301-0130	BUTTON SIGN, LAMP TEST	2-339
S903	90111-0120	SWITCH, 2 POS.704.510 .0A+704.901.5/A	2-339
S904	90064-0082	PUSH BUTTON, WHITE	2-339
S904:1	359301-0170	BUTTON SIGN, SPOOLING OF FINAL FOLDER	2-339
S905	90064-0098	PUSH BUTTON, CLEAR	2-339
S905:1	359301-0091	BUTTON SIGN, INCHING FINAL FOLDER	2-339
S906	90064-0082	PUSH BUTTON, WHITE	2-339
S906:1	359301-0050	BUTTON SIGN, DROP CHUTE BRIK	2-339
S907	90064-0098	PUSH BUTTON, CLEAR	2-339
S907:1	359301-0090	BUTTON SIGN, INCHING	2-339
S908	90064-0084	PUSH BUTTON, YELLOW	2-339
S908:1	359301-0110	BUTTON SIGN, SHORT STOP	2-339
S909	90064-0086	PUSH BUTTON, WHITE	2-339
S909:1	359301-0160	BUTTON SIGN, DRAINAGE OF PRODUCT TUBE	2-339
S911	90064-0093	PUSH BUTTON, GREEN	2-339
S911:1	359301-0001	BUTTON SIGN, UP	2-339
S912	90064-0082	PUSH BUTTON, WHITE	2-339
S912:1	359301-0005	BUTTON SIGN, DOWN	2-339
S1003	90064-0084	PUSH BUTTON, YELLOW	1-387, 1-389
S1802	90458-1651	EMERGENCY STOP, ZB4-BS-844 ZB4-BZ-104	1-387, 1-389
S2803	90458-1651	EMERGENCY STOP, ZB4-BS-844 ZB4-BZ-104	2-271
S6206	90064-0082	PUSH BUTTON, WHITE	8-287, 8-289
S7303	90064-0082	PUSH BUTTON, WHITE	8-305
S7402	90064-0082	PUSH BUTTON, WHITE	8-305
S7403	90064-0082	PUSH BUTTON, WHITE	8-305
S7408	90235-0206	QUICK EXHAUST VALVE, SEU-1/8	8-167
S7410	90235-0206	QUICK EXHAUST VALVE, SEU-1/8	8-167
S7430	90111-0120	SWITCH, 2 POS.704.510 .0A+704.901.5/A	8-279
S7431	90111-0120	SWITCH, 2 POS.704.510 .0A+704.901.5/A	8-301
S7701	90064-0084	PUSH BUTTON, YELLOW	8-287, 8-289
S7812	90458-1651	EMERGENCY STOP, ZB4-BS-844 ZB4-BZ-104	8-291
S7813	90458-1651	EMERGENCY STOP, ZB4-BS-844 ZB4-BZ-104	8-305
S7901	90064-0082	PUSH BUTTON, WHITE	8-287, 8-289

Pos	Part No	Description	Page No
T			
T1231	90113-0469	MANIFOLD REGULATOR 4 BAR	1-367
T1316	90457-0144	REGULATOR 0,3-2 BAR	1-375
T1332	90113-0469	MANIFOLD REGULATOR 4 BAR	1-375
T1402	67379-0404	TRANSFORMER	1-11
T1402	67379-0405	TRANSFORMER	1-11
T1402	67379-0407	TRANSFORMER	1-11
T1402	67379-0412	TRANSFORMER	1-11
T1402	67379-0414	TRANSFORMER	1-11
T1402	67379-0417	TRANSFORMER	1-11
T1502	90113-0470	MANIFOLD REGULATOR 10 BAR	1-367
T4200	90113-0469	MANIFOLD REGULATOR 4 BAR	2-161, 2-163, 2-165
T4301	90600-3050	REGULATOR, SA-235942A	2-47
T4302	90457-0144	REGULATOR 0,3-2 BAR	2-47
T5001	90457-0144	REGULATOR 0,3-2 BAR	2-161, 2-163, 2-165
T5200	90113-0469	MANIFOLD REGULATOR 4 BAR	2-161, 2-163, 2-165
T5205	90113-0469	MANIFOLD REGULATOR 4 BAR	2-161, 2-163, 2-165
T5210	90113-0469	MANIFOLD REGULATOR 4 BAR	2-161, 2-163, 2-165
T5215	90113-0469	MANIFOLD REGULATOR 4 BAR	2-161, 2-163, 2-165
T5306	90113-0469	MANIFOLD REGULATOR 4 BAR	2-161, 2-163, 2-165
T5315	90113-0469	MANIFOLD REGULATOR 4 BAR	2-161, 2-163, 2-165
T5504	90113-0469	MANIFOLD REGULATOR 4 BAR	2-161, 2-163, 2-165
T5506	90113-0469	MANIFOLD REGULATOR 4 BAR	2-161, 2-163, 2-165
T6101	67380-0207	TRANSFORMER	8-17
T6101	67380-0214	TRANSFORMER	8-17
T6203	90458-0258	TRANSFORMER, 220VAC/6-9-12VAC	8-199, 8-201
T9114	90113-0469	MANIFOLD REGULATOR 4 BAR	1-367
U			
U1231	90043-0065	MKC NEW FILL PUMP VACUUM PRESSURE GAUGE	1-367
U1314	90043-0065	MKC NEW FILL PUMP VACUUM PRESSURE GAUGE	1-375
U1315	90043-0065	MKC NEW FILL PUMP VACUUM PRESSURE GAUGE	1-367
U1316	90459-4991	PRESSURE GAUGE, 9063064 D=40 MM	1-375
U1332	90043-0065	MKC NEW FILL PUMP VACUUM PRESSURE GAUGE	1-375
U1502	90043-0065	MKC NEW FILL PUMP VACUUM PRESSURE GAUGE	1-367
U4200	90043-0064	PRESSURE GAUGE, 2048 D=40 MM	2-161, 2-163, 2-165
U4301	90043-0090	PRESSURE GAUGE, 2048 D=40 MM	2-47
U4302	90043-0090	PRESSURE GAUGE, 2048 D=40 MM	2-47
U5001	90043-0090	PRESSURE GAUGE, 2048 D=40 MM	2-161, 2-163, 2-165
U5200	90043-0064	PRESSURE GAUGE, 2048 D=40 MM	2-161, 2-163, 2-165
U5205	90043-0064	PRESSURE GAUGE, 2048 D=40 MM	2-161, 2-163, 2-165
U5210	90043-0064	PRESSURE GAUGE, 2048 D=40 MM	2-161, 2-163, 2-165
U5215	90043-0064	PRESSURE GAUGE, 2048 D=40 MM	2-161, 2-163, 2-165
U5306	90043-0064	PRESSURE GAUGE, 2048 D=40 MM	2-161, 2-163, 2-165
U5315	90043-0064	PRESSURE GAUGE, 2048 D=40 MM	2-161, 2-163, 2-165
U5504	90043-0064	PRESSURE GAUGE, 2048 D=40 MM	2-161, 2-163, 2-165
U5506	90043-0064	PRESSURE GAUGE, 2048 D=40 MM	2-161, 2-163, 2-165
U9114	90043-0065	MKC NEW FILL PUMP VACUUM PRESSURE GAUGE	1-367
W			
W0001	351150-0430	CABLE OLFLEX 5X35 MM2 LIGHT/GREY	2-185, 2-187, 2-189, 2-191
W100	90031-0305	I/O EXPANSION CABLE	9-97, 9-99
W101	90031-0305	I/O EXPANSION CABLE	9-97, 9-99
W102	90031-0305	I/O EXPANSION CABLE	9-97, 9-99
W103	90031-0305	I/O EXPANSION CABLE	9-97, 9-99
W106	90220-0183	SCR. CABLE 2X0,34MM2	9-71, 9-73
W118	90220-0183	SCR. CABLE 2X0,34MM2	9-71, 9-73
W119	90220-0183	SCR. CABLE 2X0,34MM2	9-71, 9-73
W120	90220-0183	SCR. CABLE 2X0,34MM2	9-71, 9-73
W121	90220-0183	SCR. CABLE 2X0,34MM2	9-71, 9-73
W122	90220-0183	SCR. CABLE 2X0,34MM2	9-71, 9-73
W123	90220-0183	SCR. CABLE 2X0,34MM2	9-71, 9-73
W124	90220-0183	SCR. CABLE 2X0,34MM2	9-71, 9-73
W125	90220-0183	SCR. CABLE 2X0,34MM2	9-71, 9-73
W126	90220-0183	SCR. CABLE 2X0,34MM2	9-71, 9-73
W127	90220-0183	SCR. CABLE 2X0,34MM2	9-71, 9-73
W130	90220-0183	SCR. CABLE 2X0,34MM2	9-71, 9-73
W133	90220-0183	SCR. CABLE 2X0,34MM2	9-71, 9-73
W135	90220-0183	SCR. CABLE 2X0,34MM2	9-71, 9-73
W137	90220-0183	SCR. CABLE 2X0,34MM2	9-71, 9-73
W138	90220-0183	SCR. CABLE 2X0,34MM2	9-71, 9-73
W139	90220-0183	SCR. CABLE 2X0,34MM2	9-71, 9-73
W151	90220-0183	SCR. CABLE 2X0,34MM2	9-149, 9-151
W152	90220-0183	SCR. CABLE 2X0,34MM2	9-149, 9-151
W153	90220-0183	SCR. CABLE 2X0,34MM2	9-149, 9-151
W210	90220-0104	SCR. CABLE 4X1,5MM2	9-71, 9-73
W211	90220-0104	SCR. CABLE 4X1,5MM2	9-71, 9-73
W212	90220-0104	SCR. CABLE 4X1,5MM2	9-71, 9-73
W213	90220-0104	SCR. CABLE 4X1,5MM2	9-71, 9-73
W214	90220-0104	SCR. CABLE 4X1,5MM2	9-71, 9-73
W215	90220-0104	SCR. CABLE 4X1,5MM2	9-71, 9-73
W300	90220-0034	THERMOCABLE TEX/SITW-20F-KX 2X0,5MM2	9-71, 9-73
W301	90220-0034	THERMOCABLE TEX/SITW-20F-KX 2X0,5MM2	9-71, 9-73
W302	90220-0034	THERMOCABLE TEX/SITW-20F-KX 2X0,5MM2	9-71, 9-73
W303	90220-0034	THERMOCABLE TEX/SITW-20F-KX 2X0,5MM2	9-71, 9-73

Pos	Part No	Description	Page No
W			
W304	90220-0034	THERMOCABLE TEX/SITW-20F-KX 2X0,5MM2	9-71, 9-73
W305	90220-0034	THERMOCABLE TEX/SITW-20F-KX 2X0,5MM2	9-71, 9-73
W306	90220-0034	THERMOCABLE TEX/SITW-20F-KX 2X0,5MM2	9-71, 9-73
W307	90220-0034	THERMOCABLE TEX/SITW-20F-KX 2X0,5MM2	9-71, 9-73
W308	90220-0034	THERMOCABLE TEX/SITW-20F-KX 2X0,5MM2	9-71, 9-73
W309	90220-0034	THERMOCABLE TEX/SITW-20F-KX 2X0,5MM2	9-71, 9-73
W310	90220-0034	THERMOCABLE TEX/SITW-20F-KX 2X0,5MM2	9-71, 9-73
W312	90220-0034	THERMOCABLE TEX/SITW-20F-KX 2X0,5MM2	9-71, 9-73
W313	90220-0034	THERMOCABLE TEX/SITW-20F-KX 2X0,5MM2	9-71, 9-73
W314	90220-0034	THERMOCABLE TEX/SITW-20F-KX 2X0,5MM2	9-71, 9-73
W315	90220-0034	THERMOCABLE TEX/SITW-20F-KX 2X0,5MM2	9-71, 9-73
W316	90220-0034	THERMOCABLE TEX/SITW-20F-KX 2X0,5MM2	9-71, 9-73
W317	90220-0034	THERMOCABLE TEX/SITW-20F-KX 2X0,5MM2	9-71, 9-73
W318	90220-0034	THERMOCABLE TEX/SITW-20F-KX 2X0,5MM2	9-71, 9-73
W319	90220-0034	THERMOCABLE TEX/SITW-20F-KX 2X0,5MM2	9-71, 9-73
W320	90220-0034	THERMOCABLE TEX/SITW-20F-KX 2X0,5MM2	9-71, 9-73
W321	90220-0034	THERMOCABLE TEX/SITW-20F-KX 2X0,5MM2	9-71, 9-73
W322	90220-0034	THERMOCABLE TEX/SITW-20F-KX 2X0,5MM2	9-71, 9-73
W323	90220-0034	THERMOCABLE TEX/SITW-20F-KX 2X0,5MM2	9-71, 9-73
W331	90220-0034	THERMOCABLE TEX/SITW-20F-KX 2X0,5MM2	9-71, 9-73
W332	90220-0034	THERMOCABLE TEX/SITW-20F-KX 2X0,5MM2	9-71, 9-73
W333	90220-0034	THERMOCABLE TEX/SITW-20F-KX 2X0,5MM2	9-71, 9-73
W382	90220-0034	THERMOCABLE TEX/SITW-20F-KX 2X0,5MM2	9-71, 9-73
W450	1254442-0000	CABLE SERIAL	9-149, 9-151
W451	90459-1621	CABLE, ETHERNET RJ 45 CONNECT. 1 M	9-149, 9-151
W452	351501-0030	ETHERNET PATCH CABLE, FL CAT5 PATCH 3,0	9-149, 9-151
W456	90459-1621	CABLE, ETHERNET RJ 45 CONNECT. 1 M	9-149, 9-151
W457	90220-0180	CABLE, ETHERNET RJ 45 CONNECT. 3 M	9-149, 9-151
W700	90459-2540	SERCOS CABLE 3.0M, 2090-SCEP3-0	9-37, 9-89, 9-91
W701	90459-2537	SERCOS CABLE 0.3M	9-89, 9-91
W702	90459-2536	SERCOS CABLE 0.1M, 2090-SCEP0-1	9-89, 9-91
W702	90459-2537	SERCOS CABLE 0.3M	9-89, 9-91
W703	90459-2536	SERCOS CABLE 0.1M, 2090-SCEP0-1	9-89, 9-91
W703	90459-2537	SERCOS CABLE 0.3M	9-89, 9-91
W704	90459-2539	SERCOS CABLE 1.0M, 2090-SCEP1-0	9-89, 9-91
W705	90459-2536	SERCOS CABLE 0.1M, 2090-SCEP0-1	9-89, 9-91
W706	90459-2536	SERCOS CABLE 0.1M, 2090-SCEP0-1	9-89, 9-91
W707	90459-2540	SERCOS CABLE 3.0M, 2090-SCEP3-0	9-89, 9-91
W710	351150-0432	CABLE OLFLEX 5X10 MM2 LIGHT/GREY	9-29
W711	90459-2540	SERCOS CABLE 3.0M, 2090-SCEP3-0	9-39
W712	90459-2536	SERCOS CABLE 0.1M, 2090-SCEP0-1	9-39
W713	90459-2536	SERCOS CABLE 0.1M, 2090-SCEP0-1	9-39
W714	90459-2539	SERCOS CABLE 1.0M, 2090-SCEP1-0	9-39
W715	90459-2536	SERCOS CABLE 0.1M, 2090-SCEP0-1	9-37
W716	90459-2536	SERCOS CABLE 0.1M, 2090-SCEP0-1	9-37
W717	90459-2536	SERCOS CABLE 0.1M, 2090-SCEP0-1	9-37
W724	90220-0107	SCR. CABLE 5X0,75MM2	2-117, 2-119
W725	90220-0107	SCR. CABLE 5X0,75MM2	9-27
W729	90220-0107	SCR. CABLE 5X0,75MM2	2-185, 2-187
W760	90459-6145	SCR. CABLE 4X6MM2	9-35
W761	90459-6145	SCR. CABLE 4X6MM2	9-35
W765	351150-0413	CABLE OLFLEX 4GX1,5 MM2 LIGHT/GREY	2-185, 2-187
W768	351150-0425	CABLE OLFLEX 25X0,75 MM2 LIGHT/GREY	9-21
W780	90459-2530	DEVICENET CABLE THIN	9-23
W781	90459-2530	DEVICENET CABLE THIN	6-77
W901	90220-0181	CABLE, ETHERNET RJ 45 CONNECT. 5 M	9-93
W903	90459-2530	DEVICENET CABLE THIN	9-71, 9-73
W910	90459-2530	DEVICENET CABLE THIN	9-71, 9-73
W1001	351150-0425	CABLE OLFLEX 25X0,75 MM2 LIGHT/GREY	1-383
W1002	351150-0425	CABLE OLFLEX 25X0,75 MM2 LIGHT/GREY	1-383
W1003	351150-0425	CABLE OLFLEX 25X0,75 MM2 LIGHT/GREY	1-387, 1-389
W1004	351150-0425	CABLE OLFLEX 25X0,75 MM2 LIGHT/GREY	1-387, 1-389
W1005	351150-0418	CABLE OLFLEX 4X2,5 MM2 LIGHT/GREY	2-55, 2-57
W1005	351150-0425	CABLE OLFLEX 25X0,75 MM2 LIGHT/GREY	1-387, 1-389
W1006	351150-0407	CABLE OLFLEX 12X0,75 MM2 LIGHT/GREY	1-387, 1-389
W1011	351150-0405	CABLE OLFLEX 5X0,75 MM2 LIGHT/GREY	1-387, 1-389
W1012	351150-0403	CABLE OLFLEX 3X0,75 MM2 LIGHT/GREY	1-387, 1-389
W1013	351150-0403	CABLE OLFLEX 3X0,75 MM2 LIGHT/GREY	1-387, 1-389
W1015	351150-0403	CABLE OLFLEX 3X0,75 MM2 LIGHT/GREY	1-387, 1-389
W1018	351150-0403	CABLE OLFLEX 3X0,75 MM2 LIGHT/GREY	1-387, 1-389
W1029	351150-0404	CABLE OLFLEX 4X0,75 MM2 LIGHT/GREY	1-387, 1-389
W1030	351150-0403	CABLE OLFLEX 3X0,75 MM2 LIGHT/GREY	1-387, 1-389
W1031	351150-0403	CABLE OLFLEX 3X0,75 MM2 LIGHT/GREY	1-387, 1-389
W1041	351150-0405	CABLE OLFLEX 5X0,75 MM2 LIGHT/GREY	1-387, 1-389
W1044	351150-0405	CABLE OLFLEX 5X0,75 MM2 LIGHT/GREY	1-387, 1-389
W1045	351150-0405	CABLE OLFLEX 5X0,75 MM2 LIGHT/GREY	1-383
W1046	351150-0405	CABLE OLFLEX 5X0,75 MM2 LIGHT/GREY	1-383
W1048	351150-0405	CABLE OLFLEX 5X0,75 MM2 LIGHT/GREY	1-387, 1-389
W1052	90220-0165	SCR. CABLE 5X0,34MM2	1-399, 1-401
W1053	2833237-0000	CABLE	1-399, 1-401
W1054	90458-2895	COAXIAL CABLE RG 400/U BROWN	1-399, 1-401
W1058	351150-0403	CABLE OLFLEX 3X0,75 MM2 LIGHT/GREY	1-387, 1-389

W

Pos	Part No	Description	Page No
W1065	351150-0403	CABLE OLFLEX 3X0,75 MM2 LIGHT/GREY	1-387, 1-389
W1066	351150-0403	CABLE OLFLEX 3X0,75 MM2 LIGHT/GREY	1-387, 1-389
W1067	351150-0405	CABLE OLFLEX 5X0,75 MM2 LIGHT/GREY	1-151
W1103	90459-4274	SCR. CABLE 2X0,5MM2	1-387, 1-389
W1232	351150-0403	CABLE OLFLEX 3X0,75 MM2 LIGHT/GREY	1-387, 1-389
W1233	351150-0403	CABLE OLFLEX 3X0,75 MM2 LIGHT/GREY	1-387, 1-389
W1235	351150-0403	CABLE OLFLEX 3X0,75 MM2 LIGHT/GREY	1-387, 1-389
W1240	90220-0105	SCR. CABLE 4X2,5MM2	1-399, 1-401
W1300	90220-0034	THERMOCABLE TEX/SITW-20F-KX 2X0,5MM2	1-399, 1-401
W1301	90220-0034	THERMOCABLE TEX/SITW-20F-KX 2X0,5MM2	1-221
W1302	90220-0034	THERMOCABLE TEX/SITW-20F-KX 2X0,5MM2	1-399, 1-401
W1303	90220-0034	THERMOCABLE TEX/SITW-20F-KX 2X0,5MM2	1-315
W1304	90220-0034	THERMOCABLE TEX/SITW-20F-KX 2X0,5MM2	2-55, 2-57
W1305	90220-0034	THERMOCABLE TEX/SITW-20F-KX 2X0,5MM2	1-399, 1-401
W1306	90220-0034	THERMOCABLE TEX/SITW-20F-KX 2X0,5MM2	1-399, 1-401
W1307	90220-0034	THERMOCABLE TEX/SITW-20F-KX 2X0,5MM2	1-399, 1-401
W1315	90220-0165	SCR. CABLE 5X0,34MM2	1-399, 1-401
W1320	90220-0034	THERMOCABLE TEX/SITW-20F-KX 2X0,5MM2	1-399, 1-401
W1321	90220-0034	THERMOCABLE TEX/SITW-20F-KX 2X0,5MM2	1-221
W1322	90220-0034	THERMOCABLE TEX/SITW-20F-KX 2X0,5MM2	1-399, 1-401
W1323	90220-0034	THERMOCABLE TEX/SITW-20F-KX 2X0,5MM2	1-399, 1-401
W1420	90220-0072	SCR. CABLE 4X0,34MM2	1-399, 1-401
W1500	351150-0418	CABLE OLFLEX 4X2,5 MM2 LIGHT/GREY	1-399, 1-401
W1501	351120-0268	CABLE SILFLEX SIHF 4X10 00460373	1-399, 1-401
W1502	351150-0196	CABLE OLFLEX 7X4 MM2 LIGHT/GREY	1-327
W1503	351120-0264	CABLE SILFLEX SIHF 4X1,5 00460153	1-221
W1511	90220-0165	SCR. CABLE 5X0,34MM2	1-387, 1-389
W1801	351150-0404	CABLE OLFLEX 4X0,75 MM2 LIGHT/GREY	1-383
W1802	351150-0404	CABLE OLFLEX 4X0,75 MM2 LIGHT/GREY	2-55, 2-57
W1804	351150-0403	CABLE OLFLEX 3X0,75 MM2 LIGHT/GREY	2-55, 2-57
W1805	351150-0403	CABLE OLFLEX 3X0,75 MM2 LIGHT/GREY	2-55, 2-57
W1806	351150-0404	CABLE OLFLEX 4X0,75 MM2 LIGHT/GREY	2-55, 2-57
W1810	90459-4274	SCR. CABLE 2X0,5MM2	1-387, 1-389
W1823	351150-0405	CABLE OLFLEX 5X0,75 MM2 LIGHT/GREY	1-383
W1830	90220-0104	SCR. CABLE 4X1,5MM2	1-399, 1-401
W2001	351150-0425	CABLE OLFLEX 25X0,75 MM2 LIGHT/GREY	2-117, 2-119
W2002	351150-0418	CABLE OLFLEX 4X2,5 MM2 LIGHT/GREY	2-31
W2002	351150-0425	CABLE OLFLEX 25X0,75 MM2 LIGHT/GREY	2-117, 2-119
W2003	351150-0166	CABLE OLFLEX 4X4 MM2 LIGHT/GREY	2-117, 2-119
W2005	351150-0412	CABLE OLFLEX 3X1,5 MM2 LIGHT/GREY	2-117, 2-119
W2007	351150-0418	CABLE OLFLEX 4X2,5 MM2 LIGHT/GREY	2-117, 2-119
W2008	351150-0418	CABLE OLFLEX 4X2,5 MM2 LIGHT/GREY	2-117, 2-119
W2009	351150-0418	CABLE OLFLEX 4X2,5 MM2 LIGHT/GREY	2-117, 2-119
W2010	351150-0425	CABLE OLFLEX 25X0,75 MM2 LIGHT/GREY	2-185, 2-187, 2-189, 2-191
W2011	351150-0425	CABLE OLFLEX 25X0,75 MM2 LIGHT/GREY	2-185, 2-187, 2-189, 2-191
W2014	351150-0413	CABLE OLFLEX 4GX1,5 MM2 LIGHT/GREY	2-185, 2-187, 2-189, 2-191
W2015	90220-0104	SCR. CABLE 4X1,5MM2	2-185, 2-187, 2-189, 2-191
W2016	351150-0412	CABLE OLFLEX 3X1,5 MM2 LIGHT/GREY	2-185, 2-187, 2-189, 2-191
W2017	351150-0412	CABLE OLFLEX 3X1,5 MM2 LIGHT/GREY	2-189, 2-191
W2017	351150-0417	CABLE OLFLEX 3X2,5 MM2 LIGHT/GREY	2-185, 2-187
W2018	351150-0412	CABLE OLFLEX 3X1,5 MM2 LIGHT/GREY	2-189, 2-191
W2018	351150-0417	CABLE OLFLEX 3X2,5 MM2 LIGHT/GREY	2-185, 2-187
W2019	351150-0412	CABLE OLFLEX 3X1,5 MM2 LIGHT/GREY	2-189, 2-191
W2021	90220-0034	THERMOCABLE TEX/SITW-20F-KX 2X0,5MM2	2-185, 2-187, 2-189, 2-191
W2022	90220-0034	THERMOCABLE TEX/SITW-20F-KX 2X0,5MM2	2-185, 2-187, 2-189, 2-191
W2023	90220-0034	THERMOCABLE TEX/SITW-20F-KX 2X0,5MM2	2-185, 2-187, 2-189, 2-191
W2024	90220-0034	THERMOCABLE TEX/SITW-20F-KX 2X0,5MM2	2-185, 2-187
W2025	351150-0417	CABLE OLFLEX 3X2,5 MM2 LIGHT/GREY	2-185, 2-187
W2026	351150-0417	CABLE OLFLEX 3X2,5 MM2 LIGHT/GREY	2-185, 2-187
W2027	90220-0095	SCR. CABLE 3X0,75MM2	7-11
W2029	90220-0104	SCR. CABLE 4X1,5MM2	1-399, 1-401
W2030	351150-0425	CABLE OLFLEX 25X0,75 MM2 LIGHT/GREY	2-185, 2-187, 2-189, 2-191
W2040	351150-0412	CABLE OLFLEX 3X1,5 MM2 LIGHT/GREY	1-315
W2041	351120-0264	CABLE SILFLEX SIHF 4X1,5 00460153	1-315
W2042	351120-0264	CABLE SILFLEX SIHF 4X1,5 00460153	1-315
W2050	351150-0425	CABLE OLFLEX 25X0,75 MM2 LIGHT/GREY	2-117, 2-119
W2055	90220-0034	THERMOCABLE TEX/SITW-20F-KX 2X0,5MM2	2-117, 2-119
W2060	90220-0201	CABLE OLFLEX 18X0,75 MM2	1-259
W2061	351150-0417	CABLE OLFLEX 3X2,5 MM2 LIGHT/GREY	1-259
W2062	90220-0165	SCR. CABLE 5X0,34MM2	1-259
W2063	90220-0034	THERMOCABLE TEX/SITW-20F-KX 2X0,5MM2	1-285
W2064	90220-0034	THERMOCABLE TEX/SITW-20F-KX 2X0,5MM2	1-259
W2066	90458-2557	CABLE OLFLEX 25X1 MM2	2-185, 2-187, 2-189, 2-191
W2067	90458-2557	CABLE OLFLEX 25X1 MM2	2-185, 2-187, 2-189, 2-191
W2068	1363297-0000	CABLE LVDS 10M	2-185, 2-187, 2-189, 2-191
W2071	351150-0412	CABLE OLFLEX 3X1,5 MM2 LIGHT/GREY	2-117, 2-119
W2072	351150-0412	CABLE OLFLEX 3X1,5 MM2 LIGHT/GREY	2-117, 2-119
W2073	351150-0412	CABLE OLFLEX 3X1,5 MM2 LIGHT/GREY	2-185, 2-187
W2074	351150-0412	CABLE OLFLEX 3X1,5 MM2 LIGHT/GREY	2-185, 2-187
W2075	351150-0412	CABLE OLFLEX 3X1,5 MM2 LIGHT/GREY	2-321
W2076	351150-0412	CABLE OLFLEX 3X1,5 MM2 LIGHT/GREY	2-311
W2090	2540596-0003	COAXIAL CABLE	2-117, 2-119

Pos	Part No	Description	Page No
W			
W2091	2540596-0003	COAXIAL CABLE	2-117, 2-119
W2109	351150-0403	CABLE OLFLEX 3X0,75 MM2 LIGHT/GREY	2-103
W2201	90042-0583	CABLE MECMAN 440-827 000-1	7-79
W2208	351150-0403	CABLE OLFLEX 3X0,75 MM2 LIGHT/GREY	2-83
W2209	351150-0403	CABLE OLFLEX 3X0,75 MM2 LIGHT/GREY	2-83
W2209	351150-0418	CABLE OLFLEX 4X2,5 MM2 LIGHT/GREY	2-81
W2211	351150-0412	CABLE OLFLEX 3X1,5 MM2 LIGHT/GREY	2-117, 2-119
W2212	351150-0405	CABLE OLFLEX 5X0,75 MM2 LIGHT/GREY	2-185, 2-187, 2-189, 2-191
W 2213	351150-0418	CABLE OLFLEX 4X2,5 MM2 LIGHT/GREY	7-27
W 2214	351150-0418	CABLE OLFLEX 4X2,5 MM2 LIGHT/GREY	7-17
W 2220	351150-0403	CABLE OLFLEX 3X0,75 MM2 LIGHT/GREY	7-71, 7-73
W2222	351150-0403	CABLE OLFLEX 3X0,75 MM2 LIGHT/GREY	7-35
W2224	351150-0406	CABLE OLFLEX 7X0,75 MM2 LIGHT/GREY	2-185, 2-187, 2-189, 2-191
W2225	351150-0405	CABLE OLFLEX 5X0,75 MM2 LIGHT/GREY	2-117, 2-119
W2226	351150-0406	CABLE OLFLEX 7X0,75 MM2 LIGHT/GREY	2-117, 2-119
W2227	351150-0405	CABLE OLFLEX 5X0,75 MM2 LIGHT/GREY	2-185, 2-187
W2228	351150-0406	CABLE OLFLEX 7X0,75 MM2 LIGHT/GREY	2-185, 2-187, 2-189, 2-191
W2230	351150-0405	CABLE OLFLEX 5X0,75 MM2 LIGHT/GREY	2-117, 2-119
W2231	351150-0406	CABLE OLFLEX 7X0,75 MM2 LIGHT/GREY	2-117, 2-119
W2232	351150-0406	CABLE OLFLEX 7X0,75 MM2 LIGHT/GREY	2-117, 2-119
W2233	351150-0403	CABLE OLFLEX 3X0,75 MM2 LIGHT/GREY	2-81
W2234	351150-0406	CABLE OLFLEX 7X0,75 MM2 LIGHT/GREY	2-79
W2235	351150-0403	CABLE OLFLEX 3X0,75 MM2 LIGHT/GREY	2-103, 2-117, 2-119
W2236	351150-0403	CABLE OLFLEX 3X0,75 MM2 LIGHT/GREY	2-83
W2237	351150-0403	CABLE OLFLEX 3X0,75 MM2 LIGHT/GREY	2-83
W2238	351150-0403	CABLE OLFLEX 3X0,75 MM2 LIGHT/GREY	2-83
W2242	90220-0034	THERMOCABLE TEX/SITW-20F-KX 2X0,5MM2	7-19
W 2243	351150-0403	CABLE OLFLEX 3X0,75 MM2 LIGHT/GREY	7-71, 7-73
W2244	351150-0412	CABLE OLFLEX 3X1,5 MM2 LIGHT/GREY	2-117, 2-119
W2248	351150-0403	CABLE OLFLEX 3X0,75 MM2 LIGHT/GREY	2-83
W2249	351150-0403	CABLE OLFLEX 3X0,75 MM2 LIGHT/GREY	2-83
W2250	351150-0406	CABLE OLFLEX 7X0,75 MM2 LIGHT/GREY	7-31
W 2251	351150-0431	CABLE OLFLEX 2X0,75 MM2 LIGHT/GREY	7-27
W2252	351150-0431	CABLE OLFLEX 2X0,75 MM2 LIGHT/GREY	7-17
W2254	351150-0405	CABLE OLFLEX 5X0,75 MM2 LIGHT/GREY	2-55, 2-57
W2255	351150-0405	CABLE OLFLEX 5X0,75 MM2 LIGHT/GREY	2-55, 2-57
W2256	351150-0166	CABLE OLFLEX 4X4 MM2 LIGHT/GREY	7-41, 7-43
W2258	351150-0425	CABLE OLFLEX 25X0,75 MM2 LIGHT/GREY	7-69
W2270	90220-0091	PAIR TWISTED CABLE 2X2X0,25MM2	2-83, 2-117, 2-119
W2271	90220-0091	PAIR TWISTED CABLE 2X2X0,25MM2	2-83, 2-117, 2-119
W2708	90220-0107	SCR. CABLE 5X0,75MM2	9-71, 9-73
W2709	90220-0107	SCR. CABLE 5X0,75MM2	9-71, 9-73
W2710	90459-7174	MOTOR POWER CABLE 2090-XXNPMP-10S15	2-117, 2-119
W2711	90459-7174	MOTOR POWER CABLE 2090-XXNPMP-10S15	2-117, 2-119
W2712	90459-7174	MOTOR POWER CABLE 2090-XXNPMP-10S15	2-117, 2-119
W2713	90459-7174	MOTOR POWER CABLE 2090-XXNPMP-10S15	2-117, 2-119
W2714	90459-2566	MOTOR CABLE 16 AWG 2090-XXNPMP-16S15	2-117, 2-119
W2715	90459-2566	MOTOR CABLE 16 AWG 2090-XXNPMP-16S15	2-117, 2-119
W2716	90459-2566	MOTOR CABLE 16 AWG 2090-XXNPMP-16S15	6-77
W2716	90459-7175	MOTOR POWER CABLE 2090-XXNPMF-10S15/A	2-189, 2-191
W2720	90600-3188	MOTOR FEEDBACK CABLE 2090-XXNFMP-S07/C	2-117, 2-119
W2721	90600-3188	MOTOR FEEDBACK CABLE 2090-XXNFMP-S07/C	2-117, 2-119
W2722	90600-3188	MOTOR FEEDBACK CABLE 2090-XXNFMP-S07/C	2-117, 2-119
W2723	90600-3188	MOTOR FEEDBACK CABLE 2090-XXNFMP-S07/C	2-117, 2-119
W2724	90600-3188	MOTOR FEEDBACK CABLE 2090-XXNFMP-S07/C	2-117, 2-119
W2725	90600-3188	MOTOR FEEDBACK CABLE 2090-XXNFMP-S07/C	2-117, 2-119
W2726	90459-7176	MOTOR FEEDBACK CABLE 2090-XXNFMF-S15	2-189, 2-191
W2726	90600-3189	MOTOR FEEDBACK CABLE 2090-XXNFMP-S12/C	6-77
W2730	90459-2577	MOTOR BRAKE CABLE 2090-UXNBMP-18S15	2-117, 2-119
W2731	90459-2577	MOTOR BRAKE CABLE 2090-UXNBMP-18S15	2-117, 2-119
W2732	90459-2577	MOTOR BRAKE CABLE 2090-UXNBMP-18S15	2-117, 2-119
W2733	90459-2577	MOTOR BRAKE CABLE 2090-UXNBMP-18S15	2-117, 2-119
W2734	90459-2577	MOTOR BRAKE CABLE 2090-UXNBMP-18S15	2-117, 2-119
W2735	90459-2577	MOTOR BRAKE CABLE 2090-UXNBMP-18S15	2-117, 2-119
W4001	351150-0425	CABLE OLFLEX 25X0,75 MM2 LIGHT/GREY	2-55, 2-57
W4002	351150-0425	CABLE OLFLEX 25X0,75 MM2 LIGHT/GREY	2-55, 2-57
W4005	351150-0414	CABLE OLFLEX 5X1,5 MM2 LIGHT/GREY	2-189, 2-191
W4005	351150-0419	CABLE OLFLEX 5X2,5 MM2 LIGHT/GREY	2-185, 2-187
W4006	351150-0417	CABLE OLFLEX 3X2,5 MM2 LIGHT/GREY	2-189, 2-191
W4006	351150-0419	CABLE OLFLEX 5X2,5 MM2 LIGHT/GREY	2-185, 2-187
W4008	2562736-0001	COAXIAL CABLE	4-299
W4009	2562736-0001	COAXIAL CABLE	4-299
W4016	90220-0165	SCR. CABLE 5X0,34MM2	2-117, 2-119
W4017	90220-0165	SCR. CABLE 5X0,34MM2	2-117, 2-119
W4022	351150-0403	CABLE OLFLEX 3X0,75 MM2 LIGHT/GREY	2-55, 2-57
W4052	351150-0403	CABLE OLFLEX 3X0,75 MM2 LIGHT/GREY	2-117, 2-119
W4053	351150-0404	CABLE OLFLEX 4X0,75 MM2 LIGHT/GREY	2-117, 2-119
W4054	351150-0406	CABLE OLFLEX 7X0,75 MM2 LIGHT/GREY	2-55, 2-57
W4502	2570004-0001	CABLE	2-185, 2-187, 2-189, 2-191
W4503	2570004-0001	CABLE	2-185, 2-187, 2-189, 2-191
W4505	90459-1812	CABLE, ETHERNET RJ 45 CONNECT. 8 M	2-185, 2-187, 2-189, 2-191
W4506	351150-0425	CABLE OLFLEX 25X0,75 MM2 LIGHT/GREY	2-185, 2-187, 2-189, 2-191

W

Pos	Part No	Description	Page No
W4507	90459-1812	CABLE, ETHERNET RJ 45 CONNECT. 8 M	2-185, 2-187, 2-189, 2-191
W5002	351150-0413	CABLE OLFLEX 4GX1,5 MM2 LIGHT/GREY	2-185, 2-187, 2-189, 2-191
W5003	90220-0104	SCR. CABLE 4X1,5MM2	2-185, 2-187, 2-189, 2-191
W5004	351150-0412	CABLE OLFLEX 3X1,5 MM2 LIGHT/GREY	2-185, 2-187, 2-189, 2-191
W 5006	351150-0405	CABLE OLFLEX 5X0,75 MM2 LIGHT/GREY	5-327
W5021	90220-0034	THERMOCABLE TEX/SITW-20F-KX 2X0,5MM2	2-185, 2-187, 2-189, 2-191
W5022	90220-0034	THERMOCABLE TEX/SITW-20F-KX 2X0,5MM2	2-185, 2-187, 2-189, 2-191
W5023	90220-0034	THERMOCABLE TEX/SITW-20F-KX 2X0,5MM2	2-185, 2-187, 2-189, 2-191
W5503	351150-0403	CABLE OLFLEX 3X0,75 MM2 LIGHT/GREY	2-55, 2-57
W5510	351150-0405	CABLE OLFLEX 5X0,75 MM2 LIGHT/GREY	5-329, 6-79
W5516	90459-5578	ACTUATOR/SENSOR CABLE PRKT 5-56/5M	2-161, 2-163, 2-165
W5603	351150-0405	CABLE OLFLEX 5X0,75 MM2 LIGHT/GREY	5-329, 6-79
W5700	351150-0403	CABLE OLFLEX 3X0,75 MM2 LIGHT/GREY	2-185, 2-187, 2-189, 2-191
W7004	351150-0413	CABLE OLFLEX 4GX1,5 MM2 LIGHT/GREY	8-199, 8-201
W7005	351150-0412	CABLE OLFLEX 3X1,5 MM2 LIGHT/GREY	8-199, 8-201
W7006	351150-0425	CABLE OLFLEX 25X0,75 MM2 LIGHT/GREY	8-199, 8-201
W7007	351150-0425	CABLE OLFLEX 25X0,75 MM2 LIGHT/GREY	8-199, 8-201
W7008	351150-0425	CABLE OLFLEX 25X0,75 MM2 LIGHT/GREY	8-199, 8-201
W7009	351150-0425	CABLE OLFLEX 25X0,75 MM2 LIGHT/GREY	8-199, 8-201
W7010	90220-0104	SCR. CABLE 4X1,5MM2	8-177
W7011	90220-0104	SCR. CABLE 4X1,5MM2	8-247
W7014	351150-0412	CABLE OLFLEX 3X1,5 MM2 LIGHT/GREY	8-111, 8-113
W7015	90458-1076	L-SHAPED CONNECTOR CABLE 933 235-042	8-251, 8-253
W7020	90458-1076	L-SHAPED CONNECTOR CABLE 933 235-042	8-241
W7023	90458-1076	L-SHAPED CONNECTOR CABLE 933 235-042	8-251, 8-253
W7024	90458-1076	L-SHAPED CONNECTOR CABLE 933 235-042	8-111, 8-113
W7025	90458-1076	L-SHAPED CONNECTOR CABLE 933 235-042	8-111, 8-113
W7028	351150-0407	CABLE OLFLEX 12X0,75 MM2 LIGHT/GREY	8-287, 8-289
W7029	351150-0407	CABLE OLFLEX 12X0,75 MM2 LIGHT/GREY	8-305
W7031	351150-0405	CABLE OLFLEX 5X0,75 MM2 LIGHT/GREY	8-291
W7037	351150-0415	CABLE OLFLEX 7X1,5 MM2 LIGHT/GREY	8-199, 8-201
W7042	351150-0405	CABLE OLFLEX 5X0,75 MM2 LIGHT/GREY	8-111, 8-113
W7043	351150-0405	CABLE OLFLEX 5X0,75 MM2 LIGHT/GREY	8-111, 8-113
W7044	351150-0405	CABLE OLFLEX 5X0,75 MM2 LIGHT/GREY	8-111, 8-113
W7045	351150-0431	CABLE OLFLEX 2X0,75 MM2 LIGHT/GREY	8-111, 8-113
W7046	351120-0126	CABLE SILFLEX SIHF 2X4 0046025	8-139
W7047	2540595-0008	COAXIAL CABLE	8-17
W7049	351120-0145	CABLE SILFLEX SIHF 3X2,5 0046020	8-145
W7050	90220-0092	PAIR TWISTED CABLE 3X2X0,25MM2	8-143
W7054	351150-0406	CABLE OLFLEX 7X0,75 MM2 LIGHT/GREY	8-111, 8-113
W7055	351150-0412	CABLE OLFLEX 3X1,5 MM2 LIGHT/GREY	8-111, 8-113
W7072	90220-0104	SCR. CABLE 4X1,5MM2	8-133
W7073	90220-0104	SCR. CABLE 4X1,5MM2	8-133
W7076	90220-0104	SCR. CABLE 4X1,5MM2	8-199, 8-201
W7077	351150-0405	CABLE OLFLEX 5X0,75 MM2 LIGHT/GREY	8-111, 8-113
W7304	90220-0034	THERMOCABLE TEX/SITW-20F-KX 2X0,5MM2	8-165
W7401	351150-0403	CABLE OLFLEX 3X0,75 MM2 LIGHT/GREY	8-279
W7402	351150-0403	CABLE OLFLEX 3X0,75 MM2 LIGHT/GREY	8-301
W7660	90220-0096	SCR. CABLE 3X1,5MM2	6-77
W7671	351150-0404	CABLE OLFLEX 4X0,75 MM2 LIGHT/GREY	2-117, 2-119
W7700	90459-2566	MOTOR CABLE 16 AWG 2090-XXNPMP-16S15	6-77
W7701	90459-2566	MOTOR CABLE 16 AWG 2090-XXNPMP-16S15	6-77
W7702	90459-2566	MOTOR CABLE 16 AWG 2090-XXNPMP-16S15	6-77
W7703	90459-2566	MOTOR CABLE 16 AWG 2090-XXNPMP-16S15	6-77
W7704	90459-2566	MOTOR CABLE 16 AWG 2090-XXNPMP-16S15	6-77
W7705	90459-2566	MOTOR CABLE 16 AWG 2090-XXNPMP-16S15	6-77
W7706	90459-2566	MOTOR CABLE 16 AWG 2090-XXNPMP-16S15	6-77
W7710	90459-7207	MOTOR FEEDBACK CABLE 2090-XXNFMP-S09/C	6-77
W7711	90600-3189	MOTOR FEEDBACK CABLE 2090-XXNFMP-S12/C	6-77
W7712	90600-3189	MOTOR FEEDBACK CABLE 2090-XXNFMP-S12/C	6-77
W7713	90600-3189	MOTOR FEEDBACK CABLE 2090-XXNFMP-S12/C	6-77
W7714	90600-3189	MOTOR FEEDBACK CABLE 2090-XXNFMP-S12/C	6-77
W7715	90600-3189	MOTOR FEEDBACK CABLE 2090-XXNFMP-S12/C	6-77
W7716	90600-3189	MOTOR FEEDBACK CABLE 2090-XXNFMP-S12/C	6-77
W8401	351150-0403	CABLE OLFLEX 3X0,75 MM2 LIGHT/GREY	11-89
W8420	351150-0403	CABLE OLFLEX 3X0,75 MM2 LIGHT/GREY	11-89
W8828	351150-0405	CABLE OLFLEX 5X0,75 MM2 LIGHT/GREY	11-89
W8854	351150-0425	CABLE OLFLEX 25X0,75 MM2 LIGHT/GREY	11-89
W8870	90220-0107	SCR. CABLE 5X0,75MM2	11-89
W9101	351150-0403	CABLE OLFLEX 3X0,75 MM2 LIGHT/GREY	1-259
W9103	351150-0403	CABLE OLFLEX 3X0,75 MM2 LIGHT/GREY	1-259
W9104	351150-0403	CABLE OLFLEX 3X0,75 MM2 LIGHT/GREY	1-259
W9112	351150-0403	CABLE OLFLEX 3X0,75 MM2 LIGHT/GREY	1-259
W9113	351150-0404	CABLE OLFLEX 4X0,75 MM2 LIGHT/GREY	1-259
W9114	351150-0403	CABLE OLFLEX 3X0,75 MM2 LIGHT/GREY	1-259
W9115	90220-0165	SCR. CABLE 5X0,34MM2	1-259
W9117	90220-0165	SCR. CABLE 5X0,34MM2	1-259
W9118	351150-0403	CABLE OLFLEX 3X0,75 MM2 LIGHT/GREY	1-259
W9120:1	90459-3165	CABLE OLFLON PTFE 1X4,72 MM² BLACK	1-255
W9120:2	90459-3165	CABLE OLFLON PTFE 1X4,72 MM² BLACK	1-255
W9120:3	90459-3154	CABLE OLFLONPTFE 1X4,72 MM² YELLOW-GREEN	1-255
W79011	90220-0092	PAIR TWISTED CABLE 3X2X0,25MM2	8-281, 8-283

Pos	Part No	Description	Page No
W			
W79012	351179-0102	CABLE AWM 1X075 MM2 BLACK	8-285
X			
X001	90459-0959	DISTRIBUTOR BLOCK 1492-PD3163	9-123, 9-125
X011	90001-0033	WALL SOCKET, E1834666	9-149, 9-151
X025	90326-0020	PLUG, FEMALE YELLOW CR-AL	9-49, 9-51
X101	90459-6624	FEMALE INSERT HAN E AV, 09 33 006 4735	9-71, 9-73
X102	90459-6624	FEMALE INSERT HAN E AV, 09 33 006 4735	9-71, 9-73
X103	90459-6624	FEMALE INSERT HAN E AV, 09 33 006 4735	9-71, 9-73
X104	90459-6624	FEMALE INSERT HAN E AV, 09 33 006 4735	9-71, 9-73
X105	90459-6624	FEMALE INSERT HAN E AV, 09 33 006 4735	9-71, 9-73
X107	90459-6624	FEMALE INSERT HAN E AV, 09 33 006 4735	9-71, 9-73
X109	90459-6624	FEMALE INSERT HAN E AV, 09 33 006 4735	9-71, 9-73
X111	90459-6624	FEMALE INSERT HAN E AV, 09 33 006 4735	9-71, 9-73
X112	90459-6624	FEMALE INSERT HAN E AV, 09 33 006 4735	9-71, 9-73
X113	90459-6624	FEMALE INSERT HAN E AV, 09 33 006 4735	9-71, 9-73
X114	90459-6624	FEMALE INSERT HAN E AV, 09 33 006 4735	9-71, 9-73
X115	90459-6624	FEMALE INSERT HAN E AV, 09 33 006 4735	9-71, 9-73
X116	90459-6624	FEMALE INSERT HAN E AV, 09 33 006 4735	9-71, 9-73
X117	90459-6624	FEMALE INSERT HAN E AV, 09 33 006 4735	9-71, 9-73
X118	90459-6624	FEMALE INSERT HAN E AV, 09 33 006 4735	9-71, 9-73
X119	90459-6624	FEMALE INSERT HAN E AV, 09 33 006 4735	9-55
X126	90110-0159	MALE INSERT 70.310.0640.0	8-177
X126	90459-6624	FEMALE INSERT HAN E AV, 09 33 006 4735	9-71, 9-73
X127	90459-6624	FEMALE INSERT HAN E AV, 09 33 006 4735	9-71, 9-73
X129	90459-6624	FEMALE INSERT HAN E AV, 09 33 006 4735	9-71, 9-73
X130	90459-6624	FEMALE INSERT HAN E AV, 09 33 006 4735	9-71, 9-73
X132	90110-0159	MALE INSERT 70.310.0640.0	8-199, 8-201
X132	90459-6624	FEMALE INSERT HAN E AV, 09 33 006 4735	9-71, 9-73
X133	90110-0159	MALE INSERT 70.310.0640.0	8-199, 8-201
X133	90459-6624	FEMALE INSERT HAN E AV, 09 33 006 4735	9-71, 9-73
X134	90110-0159	MALE INSERT 70.310.0640.0	8-199, 8-201
X134	90459-6624	FEMALE INSERT HAN E AV, 09 33 006 4735	9-71, 9-73
X136	90459-6624	FEMALE INSERT HAN E AV, 09 33 006 4735	9-71, 9-73
X137	90459-6624	FEMALE INSERT HAN E AV, 09 33 006 4735	9-71, 9-73
X138	90459-6624	FEMALE INSERT HAN E AV, 09 33 006 4735	9-71, 9-73
X201	90459-6627	FEMALE INSERT HAN E AV, 09 33 024 4735	9-71, 9-73
X202	90459-6627	FEMALE INSERT HAN E AV, 09 33 024 4735	9-71, 9-73
X203	90459-6627	FEMALE INSERT HAN E AV, 09 33 024 4735	9-71, 9-73
X204	90459-6627	FEMALE INSERT HAN E AV, 09 33 024 4735	9-71, 9-73
X206	90459-6627	FEMALE INSERT HAN E AV, 09 33 024 4735	9-71, 9-73
X207	90459-6627	FEMALE INSERT HAN E AV, 09 33 024 4735	9-71, 9-73
X208	90459-6627	FEMALE INSERT HAN E AV, 09 33 024 4735	9-71, 9-73
X209	90459-6627	FEMALE INSERT HAN E AV, 09 33 024 4735	9-71, 9-73
X210	90459-6627	FEMALE INSERT HAN E AV, 09 33 024 4735	9-71, 9-73
X211	90459-6627	FEMALE INSERT HAN E AV, 09 33 024 4735	9-71, 9-73
X212	90459-6627	FEMALE INSERT HAN E AV, 09 33 024 4735	9-71, 9-73
X213	90110-0150	MALE INSERT 121110 0000	8-199, 8-201
X213	90459-6627	FEMALE INSERT HAN E AV, 09 33 024 4735	9-71, 9-73
X214	90110-0150	MALE INSERT 121110 0000	8-199, 8-201
X214	90459-6627	FEMALE INSERT HAN E AV, 09 33 024 4735	9-71, 9-73
X215	90459-6627	FEMALE INSERT HAN E AV, 09 33 024 4735	9-71, 9-73
X216	90459-6627	FEMALE INSERT HAN E AV, 09 33 024 4735	9-71, 9-73
X217	90459-6627	FEMALE INSERT HAN E AV, 09 33 024 4735	9-71, 9-73
X218	90459-6627	FEMALE INSERT HAN E AV, 09 33 024 4735	9-71, 9-73
X219	90110-0150	MALE INSERT 121110 0000	8-199, 8-201
X219	90459-6627	FEMALE INSERT HAN E AV, 09 33 024 4735	9-71, 9-73
X220	90110-0150	MALE INSERT 121110 0000	8-199, 8-201
X220	90459-6627	FEMALE INSERT HAN E AV, 09 33 024 4735	9-71, 9-73
X221	90459-6627	FEMALE INSERT HAN E AV, 09 33 024 4735	9-71, 9-73
X222	90459-6627	FEMALE INSERT HAN E AV, 09 33 024 4735	9-71, 9-73
X223	90459-6627	FEMALE INSERT HAN E AV, 09 33 024 4735	9-71, 9-73
X224	90459-6627	FEMALE INSERT HAN E AV, 09 33 024 4735	9-71, 9-73
X225	90459-6627	FEMALE INSERT HAN E AV, 09 33 024 4735	9-71, 9-73
X226	90459-6627	FEMALE INSERT HAN E AV, 09 33 024 4735	9-71, 9-73
X227	90459-6627	FEMALE INSERT HAN E AV, 09 33 024 4735	9-71, 9-73
X228	90459-6627	FEMALE INSERT HAN E AV, 09 33 024 4735	9-71, 9-73
X300	90459-0835	THERMO CONTACT PANEL, 16 CONTACTS 2 ROWS	9-71, 9-73
X305	90326-0022	PLUG, MALE YELLOW CR-AL	1-399, 1-401
X306	90326-0022	PLUG, MALE YELLOW CR-AL	1-399, 1-401
X307	90326-0022	PLUG, MALE YELLOW CR-AL	1-399, 1-401
X308	90326-0022	PLUG, MALE YELLOW CR-AL	1-399, 1-401
X310	90326-0022	PLUG, MALE YELLOW CR-AL	1-399, 1-401
X311	90326-0022	PLUG, MALE YELLOW CR-AL	1-399, 1-401
X312	90326-0022	PLUG, MALE YELLOW CR-AL	1-399, 1-401
X313	90326-0022	PLUG, MALE YELLOW CR-AL	1-399, 1-401
X315	90326-0022	PLUG, MALE YELLOW CR-AL	1-399, 1-401
X317	90326-0022	PLUG, MALE YELLOW CR-AL	1-399, 1-401
X318	90326-0022	PLUG, MALE YELLOW CR-AL	1-399, 1-401
X320	90326-0022	PLUG, MALE YELLOW CR-AL	8-165
X401	90110-0235	CABLE CONTACT, PX0739/P	8-177
X401	90110-0236	CHASSIS CONTACT PX0767/S	9-71, 9-73
X402	90110-0235	CABLE CONTACT, PX0739/P	8-177

Machine Type Group Description Page No

Pos	Part No	Description	Page No
X			
X402	90110-0236	CHASSIS CONTACT PX0767/S	9-71, 9-73
X403	90110-0236	CHASSIS CONTACT PX0767/S	9-71, 9-73
X404	90110-0236	CHASSIS CONTACT PX0767/S	9-71, 9-73
X405	90110-0236	CHASSIS CONTACT PX0767/S	9-71, 9-73
X406	90110-0236	CHASSIS CONTACT PX0767/S	9-71, 9-73
X451	90110-0028	CONTACT UNIT 4-POLEADAPTER	9-149, 9-151
X501	90110-0055	FEMALE INSERT HAN 6 HSB 09 31 006 2701	9-71, 9-73
X502	90110-0055	FEMALE INSERT HAN 6 HSB 09 31 006 2701	9-71, 9-73
X503	90110-0055	FEMALE INSERT HAN 6 HSB 09 31 006 2701	9-71, 9-73
X504	90110-0055	FEMALE INSERT HAN 6 HSB 09 31 006 2701	9-71, 9-73
X504	90110-0156	MALE INSERT 70.210.0653.0	8-199, 8-201
X610	90458-1178	FRAME CF 8	2-117, 2-119
X611	90458-1178	FRAME CF 8	2-117, 2-119
X612	90458-1178	FRAME CF 8	2-117, 2-119
X613	90458-1178	FRAME CF 8	2-117, 2-119
X700	2841532-0100	PLINTH	9-77, 9-79, 9-81, 9-83, 9-85
X708	90110-0057	FEMALE INSERT HAN 24 E 09 33 002 4201	9-57
X722	90459-3845	POWER SOCKET, Z-SD230	9-33
X725	90458-1279	PLUG CONNECTOR DP1	9-27
X761	90110-0296	FEMALE INSERT HDC-HA-4BS 149840-B/2	9-19
X762	90110-0296	FEMALE INSERT HDC-HA-4BS 149840-B/2	9-19
X765	90459-6624	FEMALE INSERT HAN E AV, 09 33 006 4735	9-19
X765	90459-6629	HOOD 10 B SIDE ENTRY, 19 30 010 1520	9-19
X766	90459-6624	FEMALE INSERT HAN E AV, 09 33 006 4735	9-19
X767	90459-6624	FEMALE INSERT HAN E AV, 09 33 006 4735	9-19
X767	90459-6627	FEMALE INSERT HAN E AV, 09 33 024 4735	9-19
X768	90110-0056	MALE INSERT HAN 24 E 09 33 024 2601	9-21
X780	90459-0182	INTERFACE CONNECTOR FOR TMCC2	9-23
X840	90110-0052	MALE INSERT HAN 6E 09 33 006 2601	9-55
X871	90459-1452	FEMALE INSERT HAN K 09 38 006 2711	9-55, 9-57
X872	90110-0057	FEMALE INSERT HAN 24 E 09 33 002 4201	9-55
X900	90459-2519	OPEN STYLE TAP	9-77, 9-79, 9-81, 9-83, 9-85
X901	1095597-0100	TERMINAL	2-339
X1250	90042-0535	TERMINAL BOARD 19 CORDS	1-369
X1251	90042-0535	TERMINAL BOARD 19 CORDS	1-371, 1-373
X1252	90042-0535	TERMINAL BOARD 19 CORDS	1-371, 1-373
X1253	90042-0535	TERMINAL BOARD 19 CORDS	1-377, 1-379
X1307	90326-0020	PLUG, FEMALE YELLOW CR-AL	1-293
X1511	90459-3709	CONNECTOR 3-POLE AMP 282087-1	1-199
X1512	90459-4077	WIRE SEAL , AMP 281934	1-199
X1513	90459-4079	MINI MIC SRS, AMP 183035-1	1-199
X2038	90326-0022	PLUG, MALE YELLOW CR-AL	7-19
X2051	90042-0535	TERMINAL BOARD 19 CORDS	7-77
X2710	90459-2551	CONNECTOR, MOTOR FEEDBACK 15 PIN MALE	2-117, 2-119
X2711	90459-2551	CONNECTOR, MOTOR FEEDBACK 15 PIN MALE	2-117, 2-119
X2712	90459-2551	CONNECTOR, MOTOR FEEDBACK 15 PIN MALE	2-117, 2-119
X2713	90459-2551	CONNECTOR, MOTOR FEEDBACK 15 PIN MALE	2-117, 2-119
X2714	90459-2551	CONNECTOR, MOTOR FEEDBACK 15 PIN MALE	2-117, 2-119
X2715	90459-2551	CONNECTOR, MOTOR FEEDBACK 15 PIN MALE	2-117, 2-119
X2716	90459-2551	CONNECTOR, MOTOR FEEDBACK 15 PIN MALE	6-77
X4155	2920984-0100	CONNECTION BOX	2-319
X4156	2920985-0100	CONNECTION BOX	2-309
X4157	90459-2412	CONNECTOR 4 POLE + EARTH	2-321
X4158	90459-2412	CONNECTOR 4 POLE + EARTH	2-311
X7022	90458-1595	CONNECTION, BKS-S 33M-00	8-143
X7049	90042-0535	TERMINAL BOARD 19 CORDS	8-237, 8-239
X7050	90042-0535	TERMINAL BOARD 19 CORDS	8-237, 8-239
X7051	90042-0535	TERMINAL BOARD 19 CORDS	8-235
X7304	90326-0020	PLUG, FEMALE YELLOW CR-AL	8-165
X7700	90459-2551	CONNECTOR, MOTOR FEEDBACK 15 PIN MALE	6-77
X7701	90459-2551	CONNECTOR, MOTOR FEEDBACK 15 PIN MALE	6-77
X7702	90459-2551	CONNECTOR, MOTOR FEEDBACK 15 PIN MALE	6-77
X7703	90459-2551	CONNECTOR, MOTOR FEEDBACK 15 PIN MALE	6-77
X7704	90459-2551	CONNECTOR, MOTOR FEEDBACK 15 PIN MALE	6-77
X7705	90459-2551	CONNECTOR, MOTOR FEEDBACK 15 PIN MALE	6-77
X7706	90459-2551	CONNECTOR, MOTOR FEEDBACK 15 PIN MALE	6-77
X9106	90326-0020	PLUG, FEMALE YELLOW CR-AL	1-285
X9121	90326-0020	PLUG, FEMALE YELLOW CR-AL	1-255
X9122	90326-0020	PLUG, FEMALE YELLOW CR-AL	1-255
X74031	90458-0603	CONNECTOR FEMALE 5 PINS	8-169
X74032	90458-0603	CONNECTOR FEMALE 5 PINS	8-169
X79011	90110-0147	PLUG D-SUB 9 FEMALE, DE09S064TLF	8-281, 8-283
X79012	90110-0141	PLUG D-SUB 9 MALE, DE09P064TXLF	8-285
Y			
Y1104	90042-0172	SOLENOID VALVE 4023/1005/1032 24VDC	1-235
Y1107	90042-0538	PILOT VALVE L=500MM	1-371, 1-373
Y1108	90042-0538	PILOT VALVE L=500MM	1-371, 1-373
Y1111	90042-0538	PILOT VALVE L=500MM	1-371, 1-373
Y1112	90042-0538	PILOT VALVE L=500MM	1-371, 1-373
Y1210	90042-0206	SOLENOID VALVE G1/8, 444-111-000-1	2-25
Y1220	90042-0538	PILOT VALVE L=500MM	2-49
Y1221	90042-0538	PILOT VALVE L=500MM	2-49

Pos	Part No	Description	Page No
Y			
Y1222	90042-0172	SOLENOID VALVE 4023/1005/1032 24VDC	1-319
Y1223	90042-0172	SOLENOID VALVE 4023/1005/1032 24VDC	1-319
Y1230	90042-0203	SOLENOID VALVE BüRKERT	1-351
Y1231	90042-0203	SOLENOID VALVE BüRKERT	1-351
Y1232	90459-6975	SOLENOID VALVE G1/4, 2401186082702400	1-351
Y1233	90459-6977	SOLENOID VALVE G1/4, V04B286N-B423A	1-351
Y1241	90042-0538	PILOT VALVE L=500MM	1-371, 1-373
Y1242	90042-0538	PILOT VALVE L=500MM	1-371, 1-373
Y1303	90042-0538	PILOT VALVE L=500MM	1-369
Y1311	90042-0538	PILOT VALVE L=500MM	1-377, 1-379
Y1312	90042-0538	PILOT VALVE L=500MM	1-369
Y1318	90042-0538	PILOT VALVE L=500MM	1-369
Y1320	90042-0538	PILOT VALVE L=500MM	1-377, 1-379
Y1323	90042-0538	PILOT VALVE L=500MM	1-369
Y1324	90042-0538	PILOT VALVE L=500MM	1-377, 1-379
Y1325	90042-0538	PILOT VALVE L=500MM	1-377, 1-379
Y1326	90042-0538	PILOT VALVE L=500MM	1-377, 1-379
Y1332	90042-0538	PILOT VALVE L=500MM	1-377, 1-379
Y1333	90042-0538	PILOT VALVE L=500MM	1-377, 1-379
Y1333	90187-0110	DIAPHRAGM VALVE DN15, NC WELD CONN.	1-293
Y1401	90042-0538	PILOT VALVE L=500MM	1-371, 1-373
Y1501	90042-0538	PILOT VALVE L=500MM	1-371, 1-373
Y1502	90042-0538	PILOT VALVE L=500MM	1-369
Y1503	90042-0538	PILOT VALVE L=500MM	1-369
Y1801	90042-0538	PILOT VALVE L=500MM	1-377, 1-379
Y1802	90042-0538	PILOT VALVE L=500MM	1-377, 1-379
Y1803	90042-0538	PILOT VALVE L=500MM	1-377, 1-379
Y1804	90042-0538	PILOT VALVE L=500MM	2-49
Y1805	90042-0538	PILOT VALVE L=500MM	2-49
Y1808	90042-0538	PILOT VALVE L=500MM	2-49
Y1809	90042-0538	PILOT VALVE L=500MM	2-49
Y1810	90042-0538	PILOT VALVE L=500MM	1-369
Y2104	90042-0538	PILOT VALVE L=500MM	2-49
Y2106	90042-0248	SOLENOID VALVE OFFICIENE DI ENSINO	2-251, 2-253
Y 2108	90042-0249	SOLENOID VALVE OFFICINE DI ENSINO	7-71, 7-73
Y2201	90042-0585	PILOT VALVE L=5M	7-79
Y2401	90042-0538	PILOT VALVE L=500MM	2-49
Y3101	90042-0254	SOLENOID DIAPHRAGM VALVE, R1 1/2	7-35
Y3103	90042-0538	PILOT VALVE L=500MM	7-77
Y3105	90042-0538	PILOT VALVE L=500MM	2-49
Y3109	90042-0538	PILOT VALVE L=500MM	7-77
Y3110	90042-0538	PILOT VALVE L=500MM	7-77
Y3111	90042-0538	PILOT VALVE L=500MM	7-77
Y3112	90042-0538	PILOT VALVE L=500MM	7-77
Y5200	90042-0538	PILOT VALVE L=500MM	2-171, 2-173, 2-175
Y5210	90042-0538	PILOT VALVE L=500MM	2-171, 2-173, 2-175
Y5315	90042-0538	PILOT VALVE L=500MM	2-171, 2-173, 2-175
Y5501	90042-0538	PILOT VALVE L=500MM	2-49
Y5502	90042-0538	PILOT VALVE L=500MM	2-49
Y5503	90042-0539	PILOT VALVE L=350MM	2-49
Y5504	90042-0538	PILOT VALVE L=500MM	2-171, 2-173, 2-175
Y5505	90042-0538	PILOT VALVE L=500MM	2-171, 2-173, 2-175
Y5506	90042-0538	PILOT VALVE L=500MM	2-171, 2-173, 2-175
Y6201	90042-0591	PILOT VALVE, 04938-333-08	8-237, 8-239
Y6203	90042-0539	PILOT VALVE L=350MM	8-237, 8-239
Y6205	90042-0591	PILOT VALVE, 04938-333-08	8-237, 8-239
Y7303	90042-0539	PILOT VALVE L=350MM	8-237, 8-239
Y7315	90042-0591	PILOT VALVE, 04938-333-08	8-237, 8-239
Y7402	90042-0591	PILOT VALVE, 04938-333-08	8-237, 8-239
Y7407	90042-0591	PILOT VALVE, 04938-333-08	8-237, 8-239
Y7408	90042-0538	PILOT VALVE L=500MM	8-237, 8-239
Y7410	90042-0539	PILOT VALVE L=350MM	8-237, 8-239
Y7412	90042-0538	PILOT VALVE L=500MM	8-237, 8-239
Y7413	90042-0538	PILOT VALVE L=500MM	8-237, 8-239
Y7414	90042-0538	PILOT VALVE L=500MM	8-237, 8-239
Y7415	90042-0538	PILOT VALVE L=500MM	8-237, 8-239
Y7420	90042-0591	PILOT VALVE, 04938-333-08	8-237, 8-239
Y7421	90042-0591	PILOT VALVE, 04938-333-08	8-237, 8-239
Y7425	90042-0585	PILOT VALVE L=5M	8-237, 8-239
Y7430	90042-0539	PILOT VALVE L=350MM	8-235
Y7431	90042-0539	PILOT VALVE L=350MM	8-235
Y7432	90042-0539	PILOT VALVE L=350MM	8-235
Y7433	90042-0539	PILOT VALVE L=350MM	8-235
Y7435	90042-0539	PILOT VALVE L=350MM	8-235
Y9101	90042-0171	SOLENOID VALVE BURKERT	1-257
Y9105	90042-0538	PILOT VALVE L=500MM	1-371, 1-373
Y9106	90042-0538	PILOT VALVE L=500MM	1-371, 1-373
Y9112	90042-0203	SOLENOID VALVE BüRKERT	1-263
Y9114	90042-0203	SOLENOID VALVE BüRKERT	1-263
Z			
Z001	90024-0060	FILTER 80 A 440/250 VAC, B84144-A80-R	7-11
Z002	90082-0013	OVER VOLT. PROTECT. PU 4C-R 230 VAC	7-11

Pos	Part No	Description	Page No
Z			
Z004	90024-0036	FEED THROUGH FILTER, 52-160-002	7-11
Z006	90459-1359	FILTER 1 A, 250 VAC, FN 332-1/05	9-149, 9-151
Z010	90459-3460	FOOTPRINT FILTER 22-RF010-AL	9-123, 9-125
Z011	90459-3460	FOOTPRINT FILTER 22-RF010-AL	9-123, 9-125
Z012	90459-3460	FOOTPRINT FILTER 22-RF010-AL	9-123, 9-125
Z013	90459-3460	FOOTPRINT FILTER 22-RF010-AL	9-123, 9-125
Z014	90459-3460	FOOTPRINT FILTER 22-RF010-AL	9-123, 9-125
Z015	90459-3458	FOOTPRINT FILTER 22-RF012-BL	9-135, 9-137
P.Z854	90458-2381	POWER LINE FILTER 5A	11-85
Z100	90458-1140	FERRITE, RI-26-28-13	9-123, 9-125
Z101	90458-1140	FERRITE, RI-26-28-13	9-123, 9-125
Z102	90458-1141	FERRITE, RI-16-28-9	9-97, 9-99
Z110	90458-1140	FERRITE, RI-26-28-13	9-123, 9-125
Z111	90458-1140	FERRITE, RI-26-28-13	9-123, 9-125
Z120	90458-1140	FERRITE, RI-26-28-13	9-123, 9-125
Z121	90458-1140	FERRITE, RI-26-28-13	9-123, 9-125
Z130	90458-1140	FERRITE, RI-26-28-13	9-123, 9-125
Z131	90458-1140	FERRITE, RI-26-28-13	9-123, 9-125
Z140	90458-1140	FERRITE, RI-26-28-13	9-123, 9-125
Z141	90458-1140	FERRITE, RI-26-28-13	9-123, 9-125
Z150	90458-1140	FERRITE, RI-26-28-13	9-135, 9-137
Z151	90458-1140	FERRITE, RI-26-28-13	9-135, 9-137
Z700	90459-2549	AC LINE FILTER 3-PHASE 30A, 2090-XXLF-X3	9-89, 9-91
Z700.1	90458-1162	FILTER 6 A 250 VAC, 6FC10	9-89, 9-91
Z701	90459-2549	AC LINE FILTER 3-PHASE 30A, 2090-XXLF-X3	9-89, 9-91
Z701.1	90458-1162	FILTER 6 A 250 VAC, 6FC10	9-89, 9-91
Z709	90600-5249	FERRITE, B64290L616X38	9-89, 9-91
Z710	90600-5249	FERRITE, B64290L616X38	9-89, 9-91
Z711	90600-5249	FERRITE, B64290L616X38	9-89, 9-91
Z712	90600-5249	FERRITE, B64290L616X38	9-89, 9-91
Z713	90600-5249	FERRITE, B64290L616X38	9-89, 9-91
Z714	90600-5249	FERRITE, B64290L616X38	9-89, 9-91
Z715	90600-5249	FERRITE, B64290L616X38	9-89, 9-91
Z716	90600-5249	FERRITE, B64290L616X38	9-89, 9-91
Z725	90459-3698	FILTER, 6 A, 250 VAC, FN2070M-6/06	9-27
Z750	90459-2546	POWER RAIL 8 AXIS	9-35
Z751	90459-2549	AC LINE FILTER 3-PHASE 30A, 2090-XXLF-X3	9-35
Z760	90459-3931	LINE FILTER, 3EP1, 3A 120/250 VAC	9-35
Z761	90459-3931	LINE FILTER, 3EP1, 3A 120/250 VAC	9-35
Z770	90600-5249	FERRITE, B64290L616X38	9-37
Z771	90600-5249	FERRITE, B64290L616X38	9-39
Z900	90600-5249	FERRITE, B64290L616X38	9-93
Z903	90600-5249	FERRITE, B64290L616X38	9-93
Z904	90600-5249	FERRITE, B64290L616X38	9-93
Z910	90600-5249	FERRITE, B64290L616X38	9-77, 9-79, 9-81, 9-83, 9-85
Z91031	90277-0104	FILTER F64B-2GN-ARO	1-257
Z91032	90277-0323	FILTER HOUSING / ART.NO 95S6-1/4 S 5430	1-257

Pos	Part No	Description	Page No	Pos	Part No	Description	Page No

Tetra Pak

SPC binder labels. 40 mm Full width *Note! This page is generated* **automatically.**
using the **variable definitions** *made in the* **front page** *file!!*

Tetra Pak A3/Flex 1(3)
648575-0150
Issue: 2009-09 Doc No: SPC-2851301-0117

Tetra Pak A3/Flex 1(3)
648575-0150
Issue: 2009-09 Doc No: SPC-2851301-0117

Tetra Pak A3/Flex 2(3)
648575-0150
Issue: 2009-09 Doc No: SPC-2851301-0117

Tetra Pak A3/Flex 2(3)
648575-0150
Issue: 2009-09 Doc No: SPC-2851301-0117

Tetra Pak A3/Flex 3(3)
648575-0150
Issue: 2009-09 Doc No: SPC-2851301-0117

Tetra Pak A3/Flex 3(3)
648575-0150
Issue: 2009-09 Doc No: SPC-2851301-0117

Tetra Pak A3/Flex 1(3)
648575-0150
Issue: 2009-09 Doc No: SPC-2851301-0117

Tetra Pak A3/Flex 1(3)
648575-0150
Issue: 2009-09 Doc No: SPC-2851301-0117

Tetra Pak A3/Flex 2(3)
648575-0150
Issue: 2009-09 Doc No: SPC-2851301-0117

Tetra Pak A3/Flex 2(3)
648575-0150
Issue: 2009-09 Doc No: SPC-2851301-0117

Tetra Pak A3/Flex 3(3)
648575-0150
Issue: 2009-09 Doc No: SPC-2851301-0117

Tetra Pak A3/Flex 3(3)
648575-0150
Issue: 2009-09 Doc No: SPC-2851301-0117

SPC binder labels. 30 mm Half width *Note! This page is generated* **automatically.**
using the **variable definitions** *made in the* **front page** *file!!*

Tetra Pak A3/Flex 1(3)
648575-0150
Issue: 2009-09 Doc No: SPC-2851301-0117

Tetra Pak A3/Flex 3(3)
648575-0150
Issue: 2009-09 Doc No: SPC-2851301-0117

Tetra Pak A3/Flex 2(3)
648575-0150
Issue: 2009-09 Doc No: SPC-2851301-0117

Tetra Pak A3/Flex 1(3)
648575-0150
Issue: 2009-09 Doc No: SPC-2851301-0117

Tetra Pak A3/Flex 3(3)
648575-0150
Issue: 2009-09 Doc No: SPC-2851301-0117

Tetra Pak A3/Flex 2(3)
648575-0150
Issue: 2009-09 Doc No: SPC-2851301-0117

Tetra Pak A3/Flex 1(3)
648575-0150
Issue: 2009-09 Doc No: SPC-2851301-0117

Tetra Pak A3/Flex 3(3)
648575-0150
Issue: 2009-09 Doc No: SPC-2851301-0117

Tetra Pak A3/Flex 2(3)
648575-0150
Issue: 2009-09 Doc No: SPC-2851301-0117

Tetra Pak A3/Flex 1(3)
648575-0150
Issue: 2009-09 Doc No: SPC-2851301-0117

Tetra Pak A3/Flex 3(3)
648575-0150
Issue: 2009-09 Doc No: SPC-2851301-0117

Tetra Pak A3/Flex 2(3)
648575-0150
Issue: 2009-09 Doc No: SPC-2851301-0117

Tetra Pak A3/Flex 1(3)
648575-0150
Issue: 2009-09 Doc No: SPC-2851301-0117

Tetra Pak A3/Flex 3(3)
648575-0150
Issue: 2009-09 Doc No: SPC-2851301-0117

Tetra Pak A3/Flex 2(3)
648575-0150
Issue: 2009-09 Doc No: SPC-2851301-0117

Tetra Pak A3/Flex 1(3)
648575-0150
Issue: 2009-09 Doc No: SPC-2851301-0117